PROVISIONAL PATENT APPLICATION

Filed under 35 U.S.C. §111(b)

1. TITLE OF THE INVENTION

Dual-Tank Body-Mounted Harness System for Portable Underwater Breathing Apparatus

2. CROSS-REFERENCE TO RELATED APPLICATIONS

Related to co-pending provisional "Portable Open-Mask Underwater Breathing System with Mouthpiece Regulator" (AquaPulse) by the same inventor.

3. FIELD OF THE INVENTION

Wearable body-mounted harness systems for portable underwater breathing apparatus, particularly a lightweight waist-belt harness with dual tank cradles and integrated Y-valve manifold for hands-free mini compressed air cylinder use.

4. BACKGROUND OF THE INVENTION

Existing portable underwater breathing devices require hand-held tank operation, limiting mobility and preventing camera use. Traditional scuba BCDs ($300-$800, 3-5 kg) are designed for full-size 11-15L tanks. No product exists for body-mounting 0.5L mini tanks with manifold connection for extended dive duration.

5. SUMMARY OF THE INVENTION

- Adjustable waist belt (102) with 50mm webbing, neoprene padding (116), quick-release buckle (100)

- Two injection-molded tank cradles (108) with snap-lock retention (104) and release tabs (122)
- Y-valve manifold (112) with dual inputs, check valves (132), single output for automatic tank switching
- Optional thigh strap (114) for stability
- Total dry weight ~400g. Emergency doffing in under 3 seconds.

6. DETAILED DESCRIPTION

6.1 Waist Belt Assembly

50mm high-tenacity webbing, adjustable 60-130cm circumference. Marine-grade 316 SS or Delrin quick-release buckle (100). 3mm closed-cell neoprene comfort padding (116). Two 316 SS D-ring attachment points (106). Weight: ~120g.

6.2 Tank Cradle System

Injection-molded PA66-GF30 cradles (108) on left and right hips. Semi-cylindrical recess for 63mm diameter 0.5L tanks. Anti-rotation ridges (124). Spring-loaded snap-lock latch (104) with 3-5 kg retention. Release tab (122) for tool-free removal. Belt mounting clips (120) allow position adjustment. Weight per cradle: ~65g.

6.3 Y-Valve Manifold

Dual-input, single-output brass manifold (CZ121). M18x1.5 input ports (130, 136). Central merge chamber (134). Integrated check valves (132) prevent backflow. Enables sequential depletion — seamless automatic tank switching. Single-tank compatible. Weight: ~85g.

6.4 Thigh Strap

Optional 25mm webbing strap (114) from belt to upper thigh. Prevents belt riding up during vigorous swimming. Quick-release buckle. Weight: ~30g.

8. ABSTRACT

A body-mounted harness system for portable underwater breathing apparatus, comprising an adjustable waist belt with dual injection-molded tank cradles configured to receive standard 0.5-liter compressed air cylinders via a snap-lock retention mechanism. A Y-valve manifold with integrated check valves connects two tanks to a single breathing regulator, enabling extended underwater breathing duration with automatic tank switching. The system weighs approximately 400 grams dry with emergency doffing in under three seconds.

INVENTOR

Samuel D'Agostino, Miami, Florida, United States

DISCLAIMER

This provisional patent application establishes a filing date and priority. It does not constitute a granted patent. Non-provisional must be filed within 12 months to preserve priority.

FIG. 1 — Front View of HydroHarness (Worn by User)

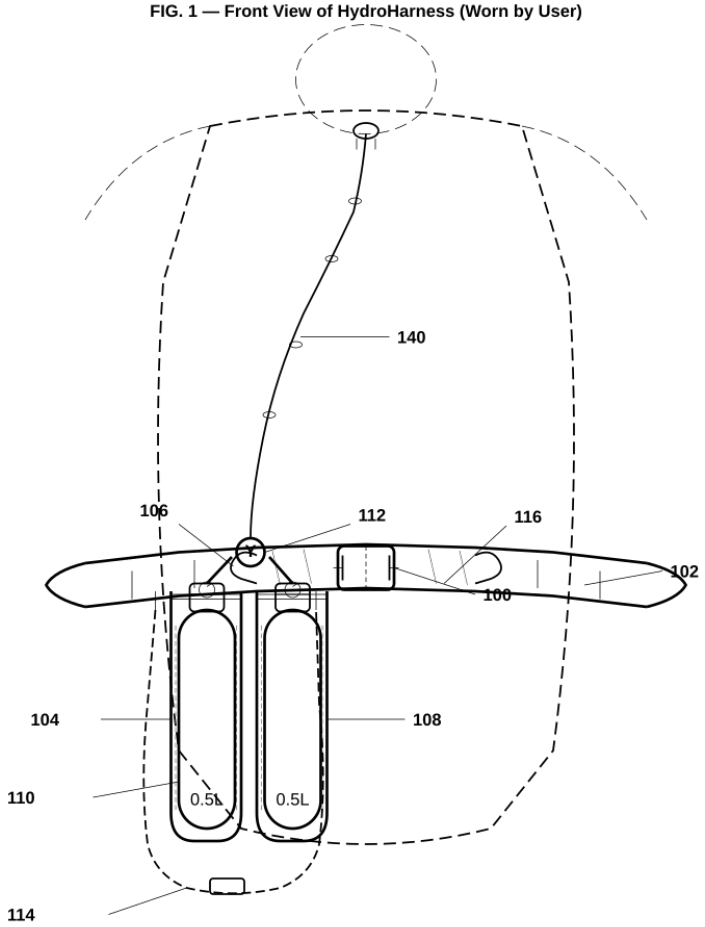

Reference Numerals:

100 — Quick-release belt buckle (side-squeeze) | 102 — Waist belt (50mm webbing) | 104 — Fabric loop retention
106 — D-ring attachment | 108 — Tank cradle (webbing loop) | 110 — 0.5L tank | 112 — Y-valve manifold
114 — Stabilizer strap (upper thigh) | 116 — Neoprene comfort padding | 140 — Breathing tube

FIG. 1 — Front View of HydroHarness (Worn by User)

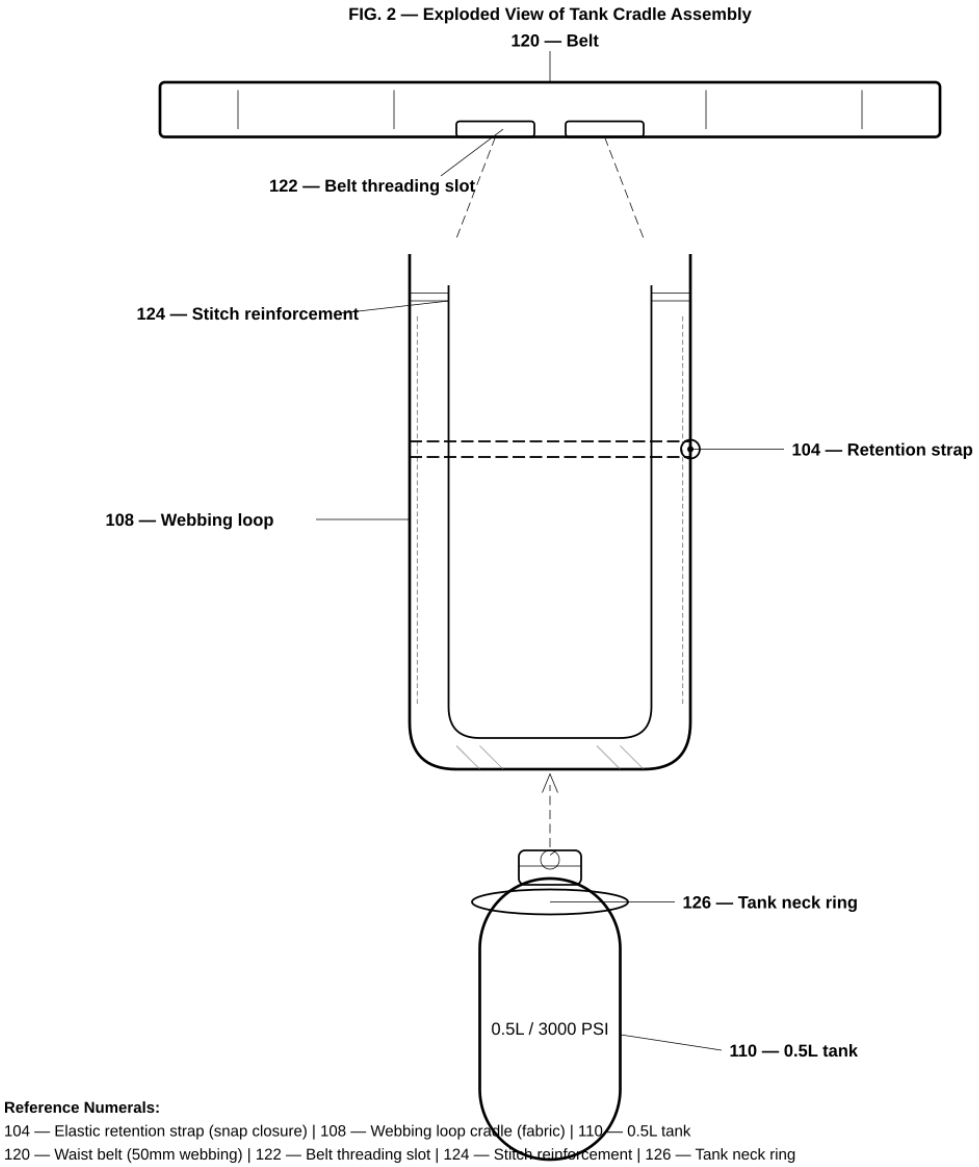

FIG. 2 — Exploded View of Tank Cradle Assembly

FIG. 3 — Cross-Section of Y-Valve Manifold

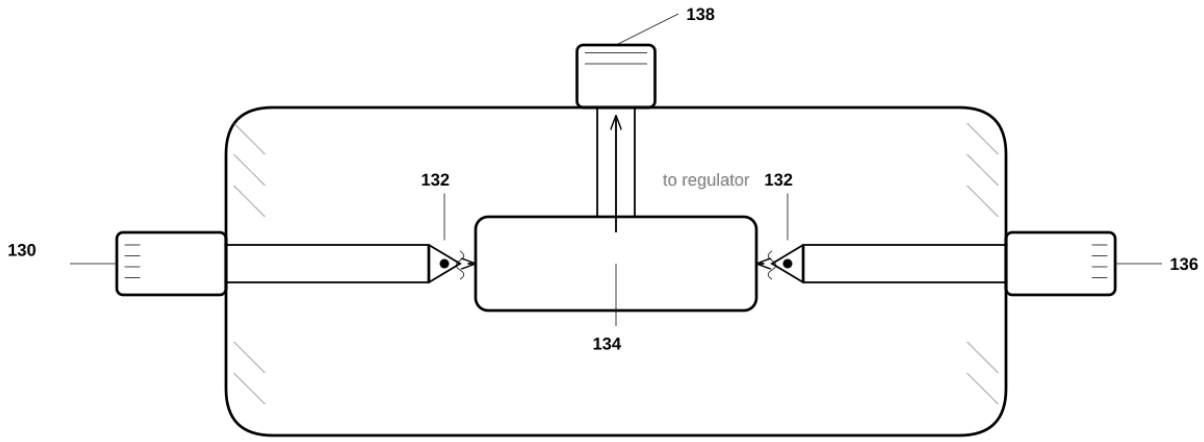

Reference Numerals:
130 — Left input port (M18×1.5 thread, Tank 1) | 132 — Check valves (×2) | 134 — Central merge chamber
136 — Right input port (M18×1.5 thread, Tank 2) | 138 — Single output port (to LP hose/regulator)

Flow direction: Both tanks feed into central chamber → single output to breathing apparatus
Check valves prevent backflow when one tank is depleted or disconnected

FIG. 3 — Cross-Section of Y-Valve Manifold

FIG. 4 — Side Profile View (Harness Worn by User)

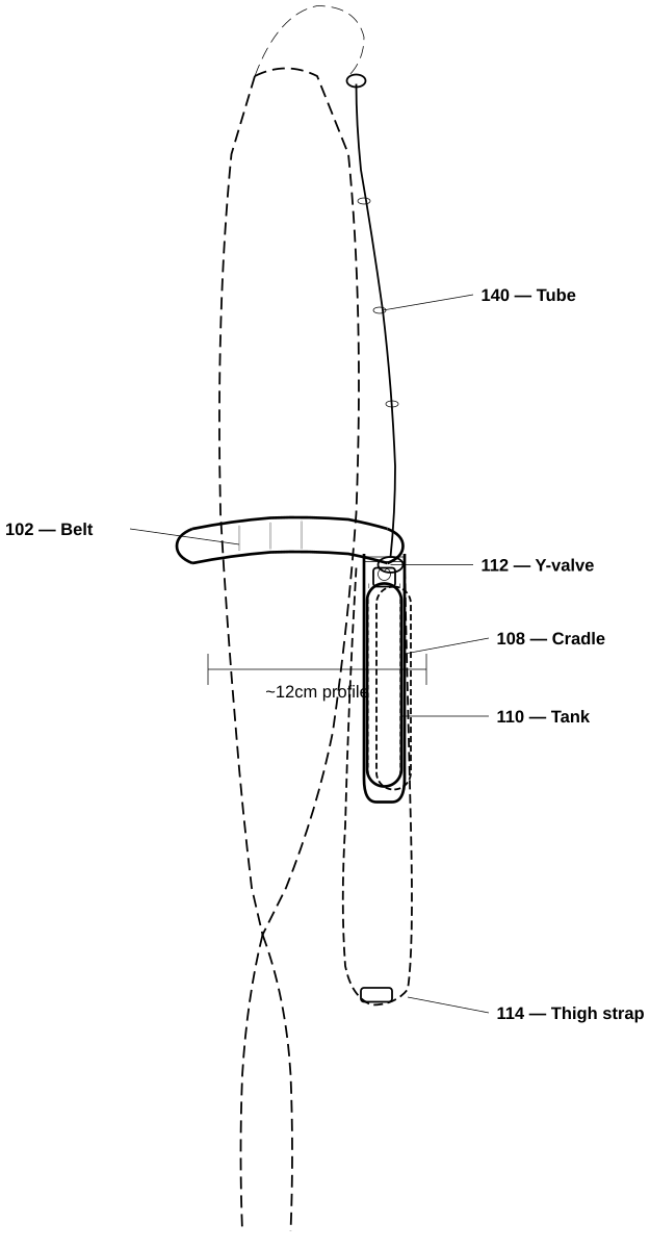

Reference Numerals:
102 — Waist belt | 108 — Tank cradle (webbing loop) | 110 — 0.5L tank | 112 — Y-valve manifold | 114 — Thigh strap | 140 — Breathing tube

FIG. 4 — Side Profile View (Harness Worn by User)

FIG. 5 — Tank Insertion Sequence

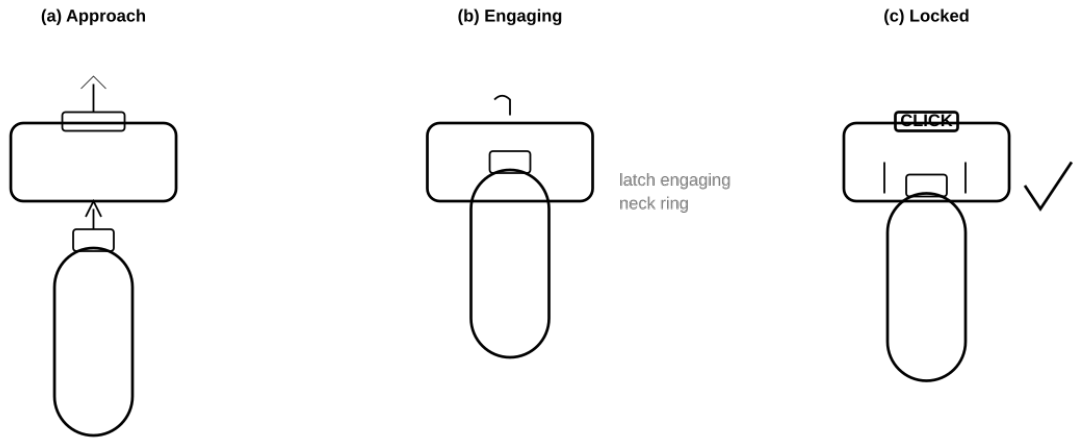

Tank Insertion Sequence:

(a) Tank approaches cradle from below with spring-loaded latch in open position

(b) Tank neck ring contacts latch mechanism, which begins to engage around the tank's neck flange

(c) Tank fully seated — latch snaps closed with audible click, anti-rotation ridges prevent tank from spinning

Removal: Press release tab (122) and pull tank downward. Total removal time: under 2 seconds.

FIG. 5 — Tank Insertion Sequence