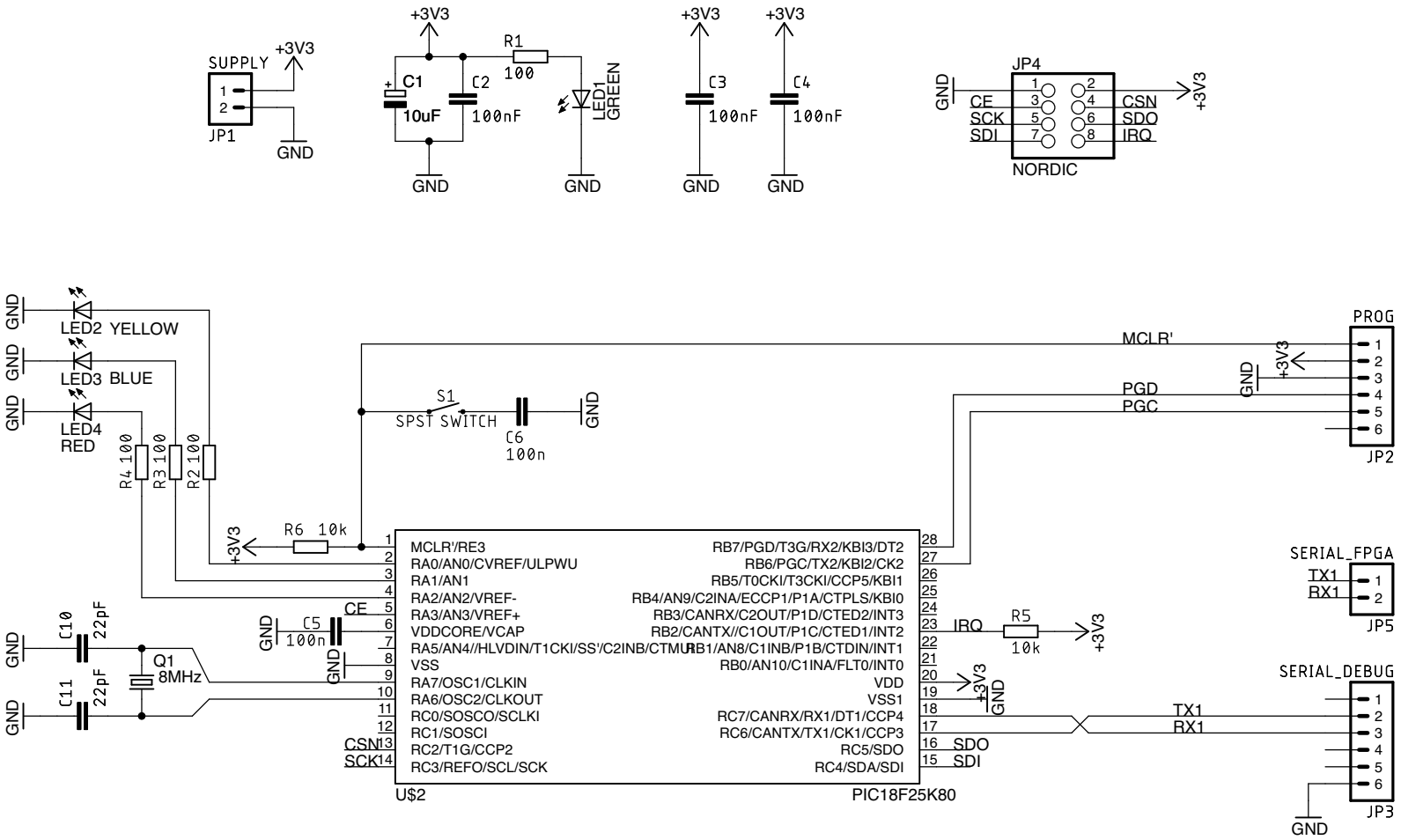

PIC1	Sheet: 1/1 (A4)
PSE 2016-2017	Doc. nbr.:
MAZZOCCHI-MELLONE-PISTONI-TRUFFELLINI-VIDONI	Rev. Code: 1.0
Date: 04/12/2017 15:36	Nomefile: pic1_v1.0