DESIGN OF AN ELECTRONIC BIRD DETERRENT SYSTEM FOR SMART RICE FARMING

S By Samuel Ochor

Designing a dynamic system to protect rice farms from bird damage.

UN's Zero Hunger goal (**SDG2**) and Responsible Consumption and Production (**SDG12**).

Main Objective
To investigate and design an electronic bird repellent device for smart rice farming.

Literature Review
Review existing bird repellent systems, focusing on deterrent mechanisms and their effectiveness.

Hardware Design
Design and implement hardware components for the actuation subsystem.

Software Development
Develop firmware and control algorithms for real-time activation of actuators based on sensor feedback.

Project Management SMART Goals

BACKGROUND & PROBLEM

Rice Farming in Kenya

Demand exceeds production; reliance on imports.

Bird Damage

Seed consumption, seedling pulling, grain feeding, yield loss.

Key Bird Species

Quelea, blackbirds, sparrows, waterfowl cause rapid destruction. **Birds are intelligent.**

Eastern carrion crows (*Corvus corone orientalis*) in Japan have been observed taking advantage of road traffic to crack hard-shelled nuts.

A woodpecker finch using a stick to impale a grub, with a second image showing it had successfully captured it

BIRD DETERRENT APPROACHES

- **Chemical Repellents**
  Effective but harmful to environment and birds.

- **Visual Deterrents**
  Scarecrows mimic predators to scare birds.

- **Hired Bird Scarers (children involved: SDG4)**

ADVANCED DETERRENT DEVICES

Smart Drones

Detect and scare birds with cameras and speakers.

RobotFalcon

Robotic predator mimics falcon to deter birds effectively.

“The birds don’t distinguish [RobotFalcon] from a real falcon, it seems.”
—Charlotte Hemelrijk, University of Groningen

TOP BIRD DETERRENT METHODS AFTER LITERATURE REVIEW

Visual Deterrents

Water Jet Spray

Bioacoustics

“We need to look at the ecosystem as a network more like a food chain. When you eradicate one species completely, there will be a knockoff effect in the web that exists within the ecosystem. I don’t think it’s a wise move on eradicating a species” **said a program manager at Nature Kenya when the County Government of Kisumu planned to eliminate 5.8 million quelea birds ravaging Ahero rice farms**

METHODOLOGY

Visual Repellents

Green class II diode lasers mounted on servomechanisms.

Integration

Interfaces with the AI-powered bird detection module developed by CMU.

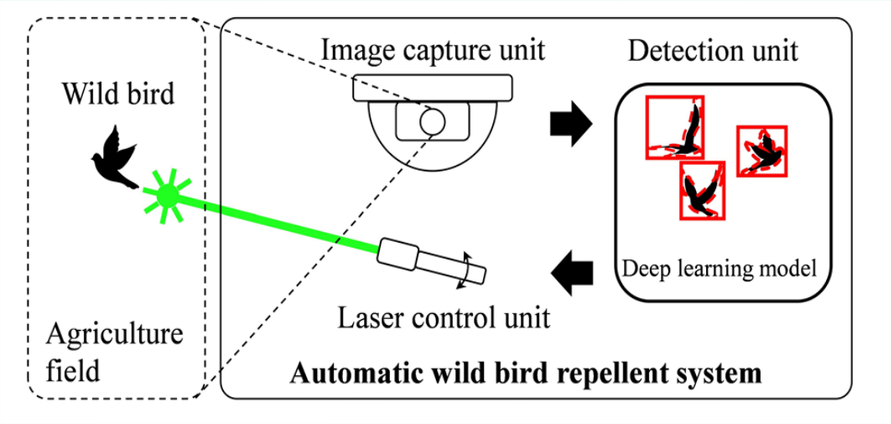

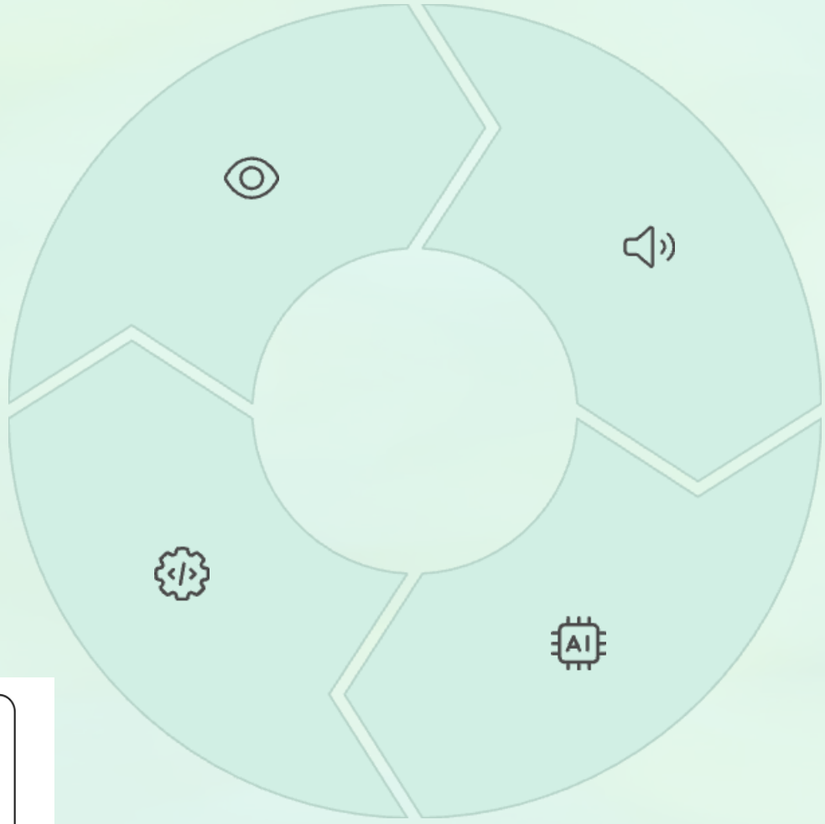

Controller System

ESP32 microcontroller serves as the "brain".

Bioacoustic Repellents

Pre-recorded sounds to play at random intervals. Hearing Bandwidth of most birds(1-4KHz)

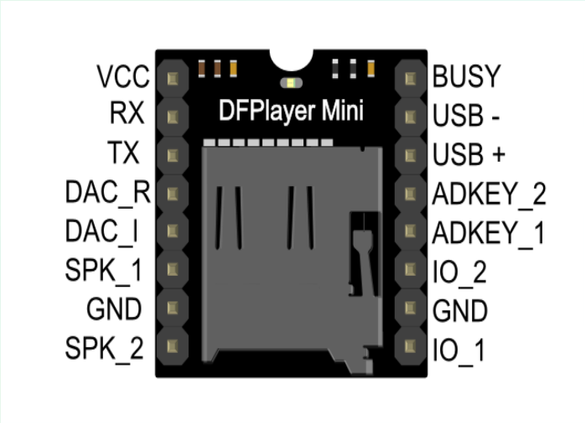

BLOCK DIAGRAM

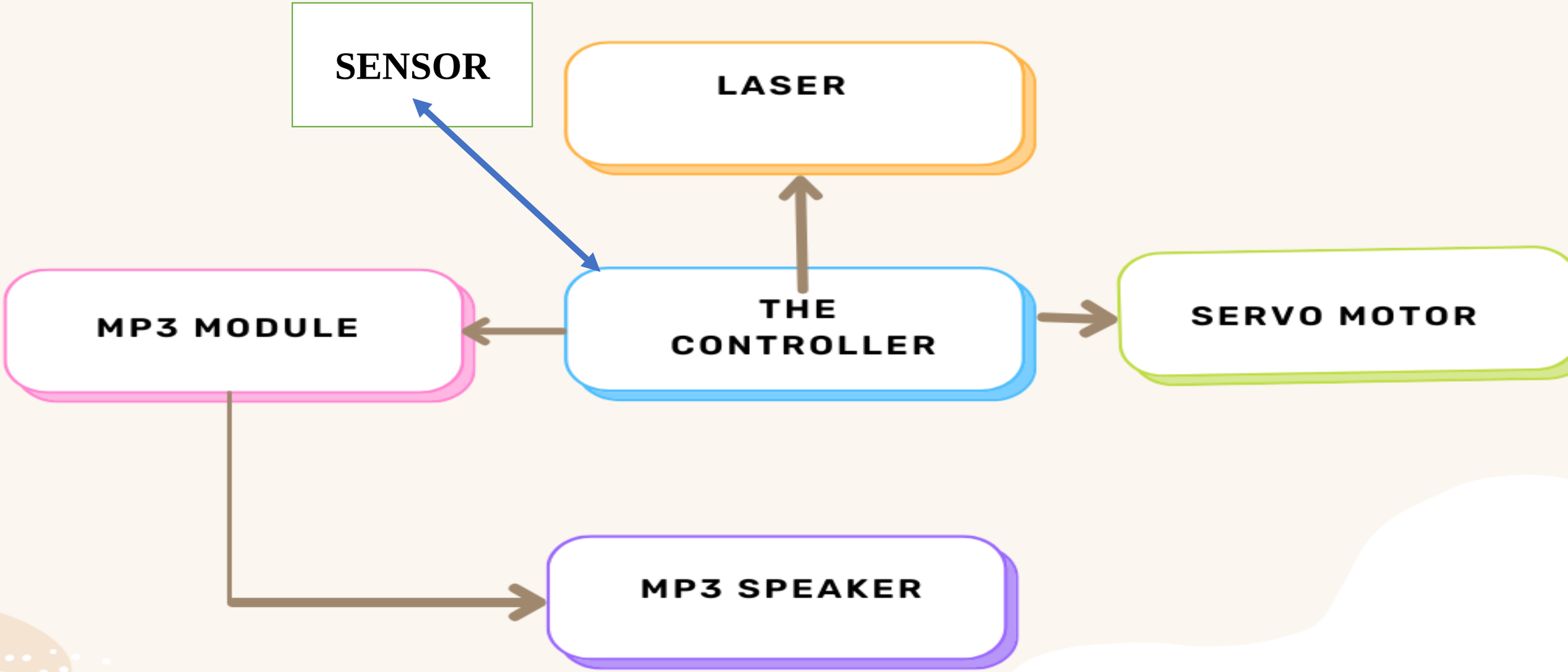

HARDWARE IMPLEMENTATION

Schematic

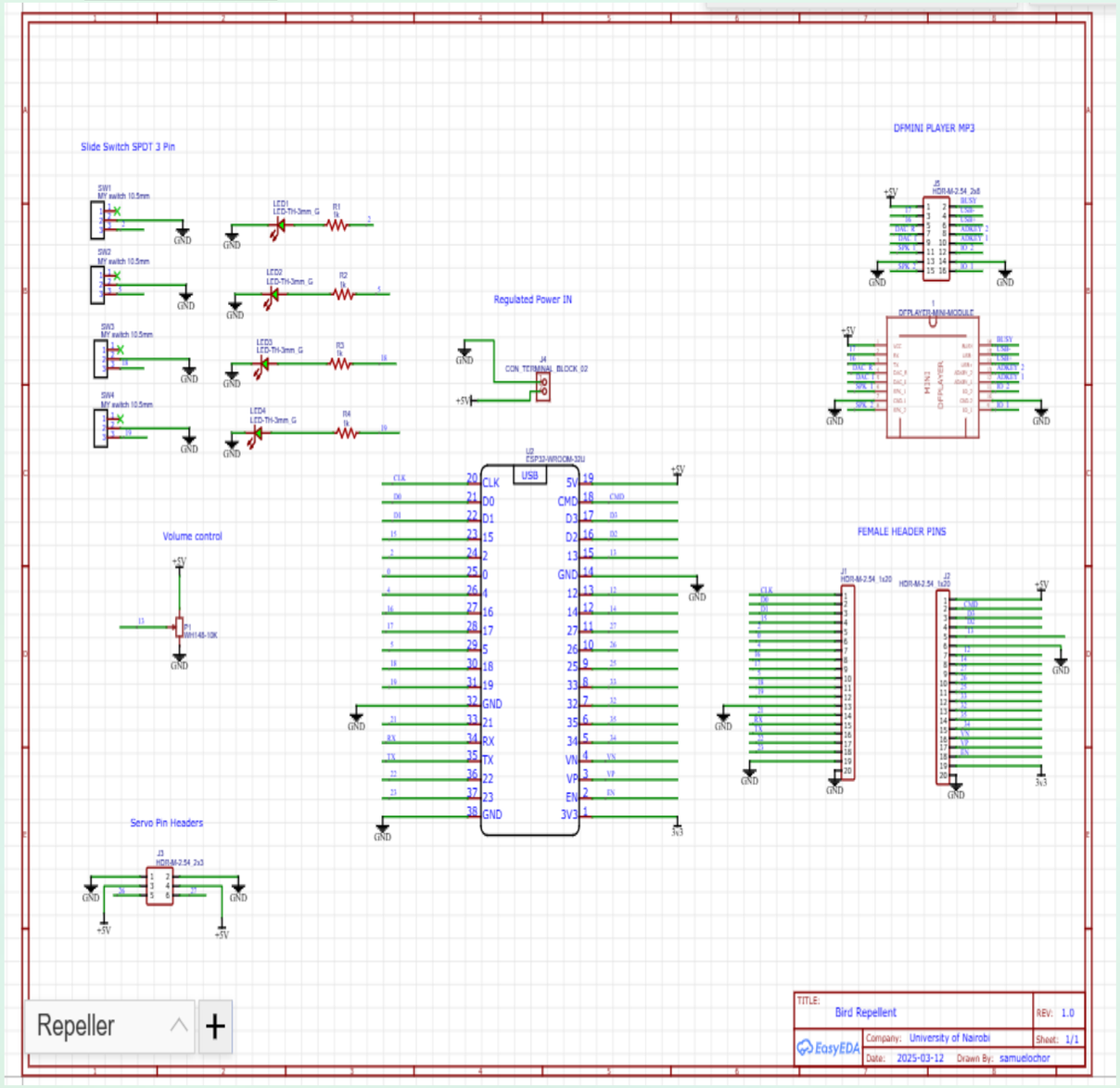

PCB Design

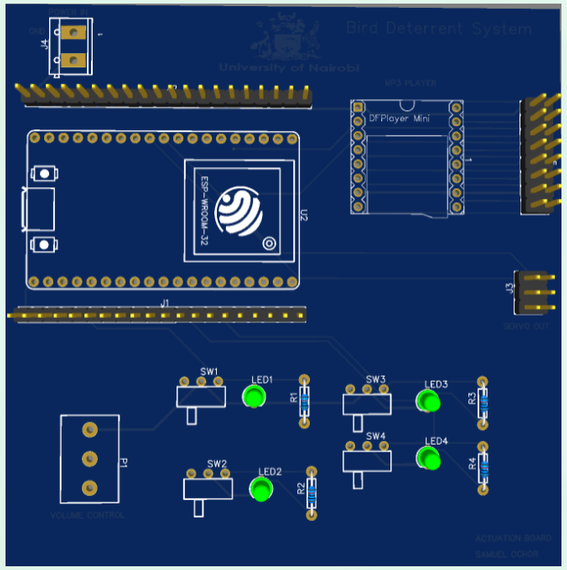

Assembled Prototype

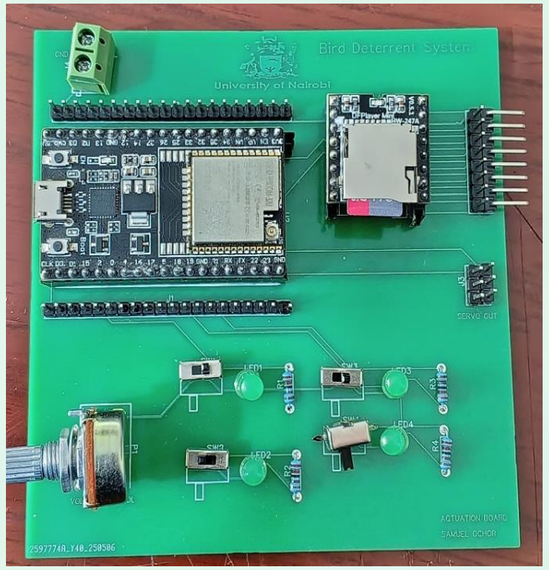

Wokwi Simulation

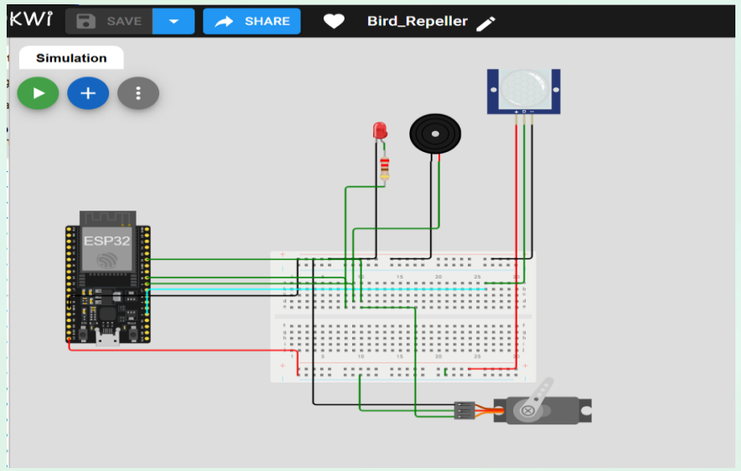

Breadboard version

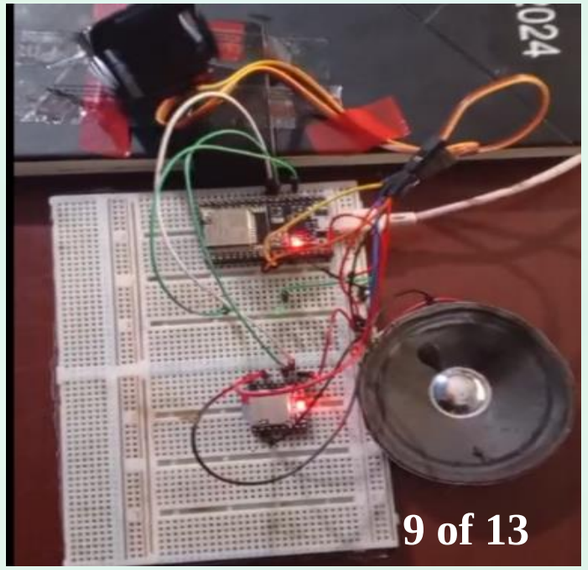

SOFTWARE IMPLEMENTATION

Modular Code Structure

The firmware was developed in the Arduino IDE environment, utilizing a modular approach with separate .h header files and .cpp source files for better organization, improved debugging, and simplified updates to individual parts of the system.

Core Functionality

BirdRepellent	5/29/2025 2:25 PM	INO File	1 KB
DFPlayerControl	5/29/2025 2:12 PM	C++ Source File	4 KB
DFPlayerControl	5/29/2025 2:13 PM	C Header Source File	1 KB
servoControl	5/29/2025 2:28 PM	C++ Source File	4 KB
servoControl	5/29/2025 2:25 PM	C Header Source File	1 KB
SlideSwitch	5/29/2025 9:46 AM	C++ Source File	3 KB
SlideSwitch	5/29/2025 9:38 AM	C Header Source File	1 KB

Control Algorithms

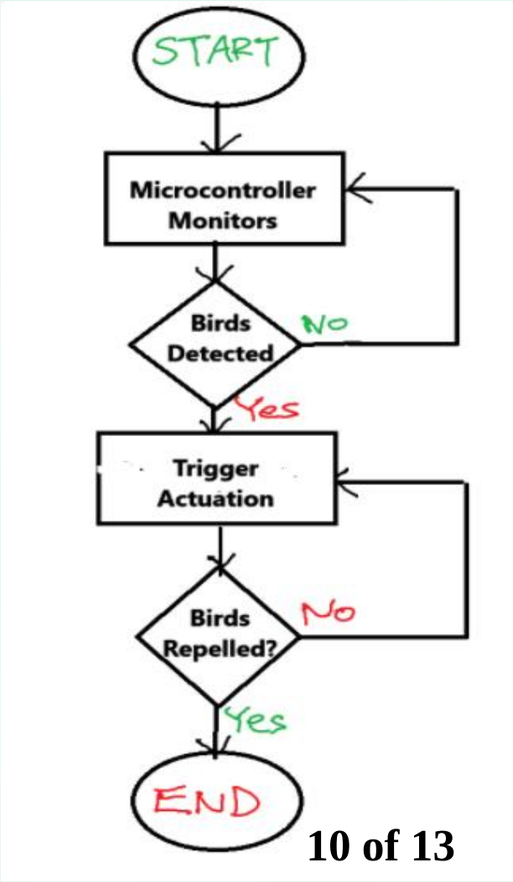

RESULTS & EFFECTIVENESS

Multi-modal Deterrence
Laser, servo, and audio coordinated activation.

Bench Tests
Confirmed responsiveness and coordination.

Future Evaluation
Field tests needed for quantitative effectiveness.

Effectiveness Metrics
BRRd and BRRh

$$BRR_d = \frac{\sum_{In\ one\ day} N_{off,i+1} - \sum_{In\ one\ day} N_{on,i}}{\sum_{In\ one\ day} N_{off,i+1}} \times 100\% \quad (3)$$

$$BRR_h = \frac{\frac{(N_{off,i-1}+N_{off,i+1})}{2} - N_{on,i}}{\frac{(N_{off,i-1}+N_{off,i+1})}{2}} \times 100\% \quad (4)$$

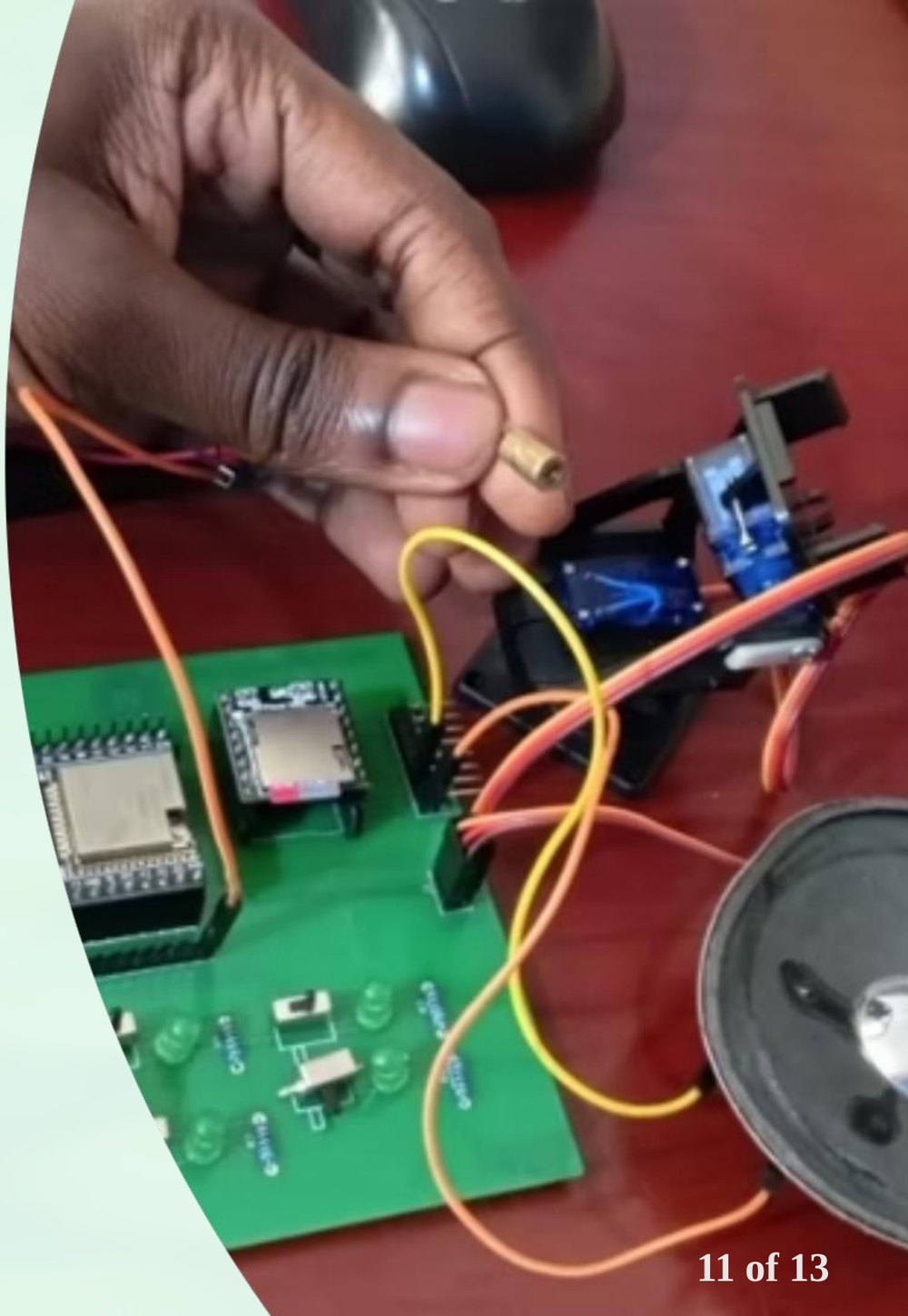

RECOMMENDATIONS

1

Coordinate Framework

Support non-co-located detection and deterrence.

2

Farmer Training & Feedback

Operate, maintain, and optimize system.

3

Ecological Study

Assess impact on target and non-target species.

4

Integration

Compact unit for power, communication, sensing.

5

Safety

Periodic laser safety and IEC compliance.

THANK YOU.