DEUTSCH – JOZSA ALGORITHM

Anoksha N A (252IS007)
Shubhi Sahu (252IS034)

CIRCUIT COMPLEXITY

- The count of least number of quantum gates required
- Relative to a universal set of quantum gates
- Typically: 1- and 2-qubit gates are used

Difficulty of Circuit Complexity

- It depends on the allowed gate set and circuit simplifications

Classical Analogy:

- There are different representations for AND, OR, NOT gates using NAND-only circuits

- So, there is no straightforward method to build a minimal quantum circuit

QUERY COMPLEXITY

- Number of calls made to a function, or queries to an oracle or black box needed to solve the problem
- We give input to the oracle or black box, and it returns an output, without us knowing how it actually works
- Oracle: f(x) returns 0 or 1
- It is the number of times we need to evaluate f(x) in order to find an item

QUANTUM ORACLE

- An oracle is a Boolean function
- For it to be a quantum oracle, it must be reversible.

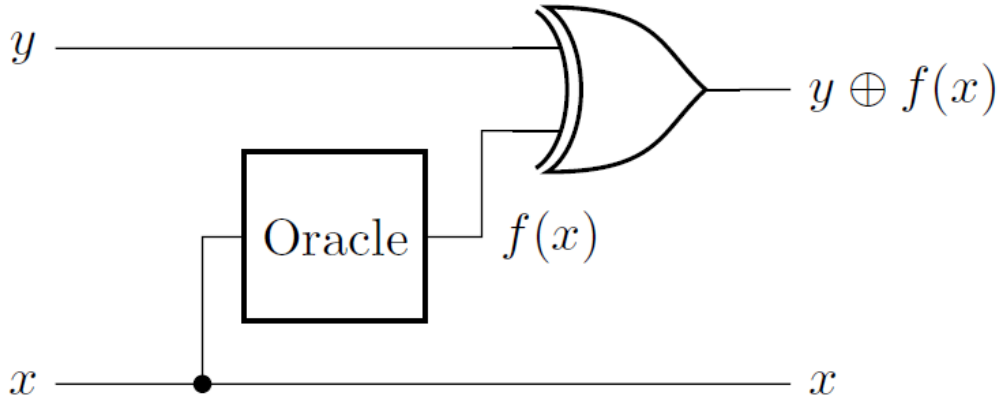

- The extra qubit |y⟩ is called an answer qubit or target qubit, and |x⟩ is called the input qubit.

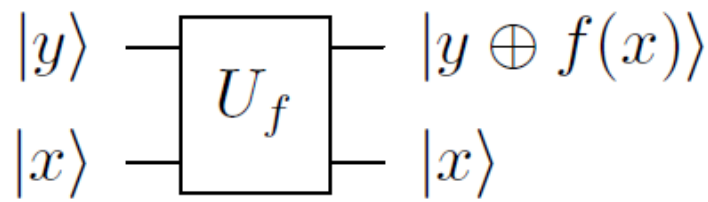

Quantum oracle representation:

$$|x\rangle|y\rangle \xrightarrow{U_f} |x\rangle|y \oplus f(x)\rangle.$$

Assume y = 0

$$|0\rangle|0\rangle \xrightarrow{U_f} |0\rangle|0 \oplus f(0)\rangle = |0\rangle|f(0)\rangle,$$
$$|1\rangle|0\rangle \xrightarrow{U_f} |1\rangle|0 \oplus f(1)\rangle = |1\rangle|f(1)\rangle.$$

Question - 1

Exercise 7.1. Consider a classical oracle $f(x) = \bar{x}$, where x is a bit, and $\bar{x}$ is the NOT of x. We want to turn this into a quantum oracle U_f that acts according to

$$|x\rangle|y\rangle \xrightarrow{U_f} |x\rangle|y \oplus f(x)\rangle.$$

Answer the following questions about this operator:

(a) What is the truth table of the quantum oracle?

x	y	x	$y \oplus f(x)$
0	0	?	?
0	1	?	?
1	0	?	?
1	1	?	?

(b) Is the operation reversible?

(c) What is the quantum oracle as a 4×4 matrix?

(d) Verify that the matrix is unitary.

a)

x	y	f(x)	y ⊕ f(x)	Output
0	0	1	0 ⊕ 1 = 1	(0,1)
0	1	1	1 ⊕ 1 = 0	(0,0)
1	0	0	0 ⊕ 0 = 0	(1,0)
1	1	0	1 ⊕ 0 = 1	(1,1)

b) Each input maps to a unique output. So no two inputs give the same output.
Hence, the operation is reversible.

c)

$$U_f = \begin{bmatrix} 0 & 1 & 0 & 0 \\ 1 & 0 & 0 & 0 \\ 0 & 0 & 1 & 0 \\ 0 & 0 & 0 & 1 \end{bmatrix}$$

d) A matrix is unitary if $U_f^\dagger U_f = I$

Since the matrix is real, $U_f^\dagger = U_f^T$

$$U_f^T = \begin{bmatrix} 0 & 1 & 0 & 0 \\ 1 & 0 & 0 & 0 \\ 0 & 0 & 1 & 0 \\ 0 & 0 & 0 & 1 \end{bmatrix}$$

$$\begin{bmatrix} 0 & 1 & 0 & 0 \\ 1 & 0 & 0 & 0 \\ 0 & 0 & 1 & 0 \\ 0 & 0 & 0 & 1 \end{bmatrix} \text{X} \begin{bmatrix} 0 & 1 & 0 & 0 \\ 1 & 0 & 0 & 0 \\ 0 & 0 & 1 & 0 \\ 0 & 0 & 0 & 1 \end{bmatrix} = \begin{bmatrix} 1 & 0 & 0 & 0 \\ 0 & 1 & 0 & 0 \\ 0 & 0 & 1 & 0 \\ 0 & 0 & 0 & 1 \end{bmatrix} = I$$

Hence the matrix is Unitary

PHASE ORACLE SETUP

- When we query a quantum oracle, the input qubit $|x\rangle$ is unchanged, whereas the answer qubit $|y\rangle$ becomes $|y \oplus f(x)\rangle$.
- We can also query the quantum oracle such that it causes the answer qubit $|y\rangle$ to remain unchanged while multiplying $|x\rangle$ by a phase.
- Start by setting $|y\rangle=|-\rangle$, which is be done by initializing answer qubit to $|0\rangle$, applying X to turn it into $|1\rangle$, and then applying H to turn it into $|-\rangle$.

$$|x\rangle|0\rangle \xrightarrow{I\otimes X} |x\rangle|1\rangle \xrightarrow{I\otimes H} |x\rangle|-\rangle.$$

Derivation - Expand $|x\rangle|-\rangle$ and query the oracle

$$
\begin{aligned}
|x\rangle|-\rangle &= |x\rangle \frac{1}{\sqrt{2}}\left(|0\rangle - |1\rangle\right) \\
&= \frac{1}{\sqrt{2}}\left(|x\rangle|0\rangle - |x\rangle|1\rangle\right) \\
&\xrightarrow{U_f} \frac{1}{\sqrt{2}}\left(|x\rangle|0 \oplus f(x)\rangle - |x\rangle|1 \oplus f(x)\rangle\right) \\
&= \begin{cases} \frac{1}{\sqrt{2}}\left(|x\rangle|0\rangle - |x\rangle|1\rangle\right), & f(x) = 0 \\ \frac{1}{\sqrt{2}}\left(|x\rangle|1\rangle - |x\rangle|0\rangle\right), & f(x) = 1 \end{cases} \\
&= \begin{cases} |x\rangle|-\rangle, & f(x) = 0 \\ -|x\rangle|-\rangle, & f(x) = 1 \end{cases} \\
&= (-1)^{f(x)}|x\rangle|-\rangle.
\end{aligned}
$$

PHASE KICKBACK

- We can interpret this as the answer qubit staying in the $|-\rangle$ state while the input qubit goes from $|x\rangle$ to $(-1)^{f(x)}|x\rangle$.
- The input qubit acquires a phase. This is called phase kickback.
- Often, we drop the answer qubit, since it stays in the $|-\rangle$ state, and only write the input qubit.

Question - 2

Exercise 7.4. We saw that when the answer qubit is in the state $|-\rangle$, we get phase kickback. Let us explore what happens if the answer qubit is in the state $|+\rangle$. Suppose an input qubit and answer qubit are in the state $|x\rangle|+\rangle$, where x is a bit. If we apply the quantum oracle U_f to this, which maps $|x\rangle|y\rangle$ to $|x\rangle|y \oplus f(x)\rangle$, what do we get if

(a) $f(x) = 0$?

(b) $f(x) = 1$?

(c) How do your answers in parts (a) and (b) compare to the initial state $|x\rangle|+\rangle$?

Initial state: $|x\rangle|+\rangle$

Where: $|+\rangle = \dfrac{|0\rangle + |1\rangle}{\sqrt{2}}$

Expanding the initial state:

$$|x\rangle|+\rangle = |x\rangle \frac{|0\rangle + |1\rangle}{\sqrt{2}}$$

$$= \frac{1}{\sqrt{2}} \left(|x\rangle|0\rangle + |x\rangle|1\rangle \right)$$

Apply the Oracle U_f :

$$U_f(|x\rangle|+\rangle) = \frac{1}{\sqrt{2}}\left(|x\rangle|f(x)\rangle + |x\rangle|1 \oplus f(x)\rangle\right)$$

a) For f(x) = 0

$$= \frac{1}{\sqrt{2}}\left(|x\rangle|0\rangle + |x\rangle|1\rangle\right) = |x\rangle\frac{|0\rangle + |1\rangle}{\sqrt{2}} = |x\rangle|+\rangle$$

b) For f(x) = 1

$$= \frac{1}{\sqrt{2}}\left(|x\rangle|1\rangle + |x\rangle|0\rangle\right) = |x\rangle\frac{|0\rangle + |1\rangle}{\sqrt{2}} = |x\rangle|+\rangle$$

c) Output = Input in both cases, which is $|x\rangle|+\rangle$

PARITY PROBLEM

- Given : two unknown bits b_0, b_1
- Goal : to find the parity of the two bits

$$b_0 \oplus \quad b_1$$

- f(x) = b_x where x ∈ {0,1}
- f(0) = b_0, f(1) = b_1

CLASSICAL SOLUTION

- We need to know both bits in order to find $b_0 \oplus b_1$
- Hence, we query the oracle twice, once to find b_0 and again, to find b_1:
- b_0 = f(0), b_1= f(1).
- Then we take the XOR of b_0 and b_1 to find the parity.
- The classical query complexity is 2

QUANTUM CIRCUIT (DEUSTCH'S ALGORTIHM)

- **Uses 2 qubits:**

1. Input qubit
2. Output qubit

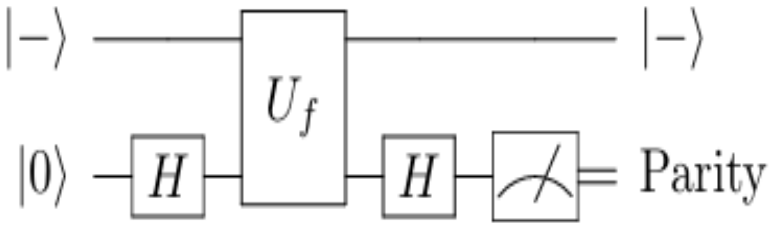

- **Steps:**

1. Initialize qubits
2. Apply Hadamard gate
3. Apply oracle U_f
4. Apply Hadamard again
5. Measure

Working through each step of Circuit

- Apply the Hadamard gate to the input qubit:

$$|0\rangle \xrightarrow{H} \frac{1}{\sqrt{2}}\left(|0\rangle + |1\rangle\right).$$

- Query the Oracle, which acts as phase oracle because the answer qubit is $|-\rangle$

$$\frac{1}{\sqrt{2}}\left[(-1)^{f(0)}|0\rangle + (-1)^{f(1)}|1\rangle\right].$$

- First, we substitute f(0) = b_0 and f (1) = b_1

$$\frac{1}{\sqrt{2}}\left[(-1)^{b_0}|0\rangle + (-1)^{b_1}|1\rangle\right]$$

$$(-1)^{b_0}\frac{1}{\sqrt{2}}\left[|0\rangle + (-1)^{b_1-b_0}|1\rangle\right]$$

- Now, depending on whether b_0 and b_1 are equal

$$\begin{cases}(-1)^{b_0}\frac{1}{\sqrt{2}}\left(|0\rangle + |1\rangle\right), & b_0 = b_1\\ (-1)^{b_0}\frac{1}{\sqrt{2}}\left(|0\rangle - |1\rangle\right), & b_0 \neq b_1\end{cases}$$

- These are just $|+\rangle$ and $|-\rangle$, each with a phase:

$$\begin{cases}(-1)^{b_0}|+\rangle, & b_0 = b_1\\ (-1)^{b_0}|-\rangle, & b_0 \neq b_1\end{cases}$$

- Applying Hadamard gate again, we get

$$\begin{cases} (-1)^{b_0}|0\rangle, & b_0 = b_1 \\ (-1)^{b_0}|1\rangle, & b_0 \neq b_1 \end{cases}$$

Final Measurement:

- **After applying Hadamard:**
- If $b_0 = b_1 \rightarrow$ Output = 0
- If $b_0 \neq b_1 \rightarrow$ Output = 1
- **Interpretation:**
- 0 → Even parity
- 1 → Odd parity

- Thus, the quantum query complexity is 1, which is an improvement over the classical query complexity of 2.
- While the improvement in query complexity from 2 to 1 is small.
- Quantum computer outperforms a classical computer.

GENERALIZATION TO ADDITIONAL BITS

What if we have n bits b_0, $b_1 \ldots\ldots, b_{n-1}$and we want to find their parity?

- Classically, we need to know all n bits, so it takes n queries.
- Quantumly, we can use Deutsch's algorithm to find the parity of pairs of bits:

$$\underbrace{b_0, b_1}_{\text{parity}}, \underbrace{b_2, b_3}_{\text{parity}}, \ldots \underbrace{b_{n-2}, b_{n-1}}_{\text{parity}}.$$

- This takes n/2 queries.
- Then we can take the XOR of all these parities to get the parity of all the bits.
- So, the quantum query complexity is n/2 ,which is half of classical query complexity.
- Note both the classical and quantum run times are O(n), however, so there is no improvement in their asymptotic scaling.

Question - 3

Exercise 7.8. You have eight bits, and using Deutsch's algorithm, you have found the parities of pairs of bits, shown below:

$$\underbrace{b_0, b_1}_{1}, \underbrace{b_2, b_3}_{1}, \underbrace{b_4, b_5}_{0}, \underbrace{b_6, b_7}_{1}.$$

(a) What is the parity of all eight bits?
(b) How many queries to the oracle did it take to find the parity of all eight bits?
(c) In the worst case, how many queries does it take to solve the problem classically?

CONSTANT VS BALANCED FUNCTION

- The function is guaranteed to be either:

x_2	x_1	x_0	$f(x)$
0	0	0	0
0	0	1	0
0	1	0	1
0	1	1	1
1	0	0	0
1	0	1	1
1	1	0	1
1	1	1	0

1. Constant Function

- Outputs **same value for all inputs**
- Always 0 OR always 1

2. Balanced Function

- Outputs:
  - 0 for **half** of inputs
  - 1 for **half** of inputs

DEUTSCH–JOZSA ALGORITHM

- We are given a function **f(x)**
- Input: binary string **x of length n** (x_{n-1} ... x_0)
- Output: either **0 or 1**
- Mathematically:
  $f : \{0,1\}^n \rightarrow \{0,1\}$

Goal of the problem

- Determine whether the function is:
- Constant
- OR Balanced

DEUTSCH–JOZSA ALGORITHM

- Quantum circuit

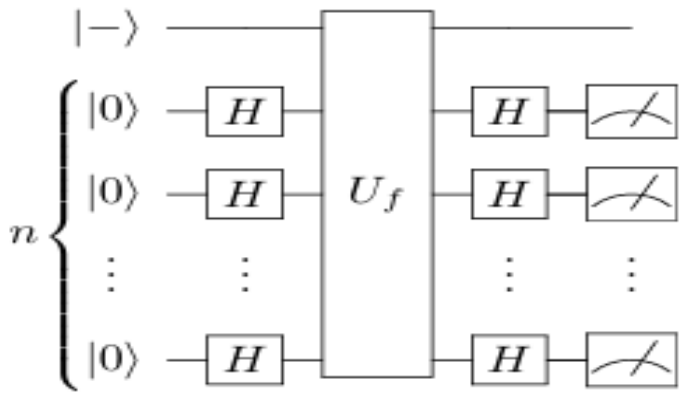

First applying the Hadamard gate to each of these n qubits, we get

$$
\begin{aligned}
|0\rangle^{\otimes n} &\xrightarrow{H^{\otimes n}} |+\rangle^{\otimes n} \\
&= \frac{1}{\sqrt{2^n}} \left(|0\rangle + |1\rangle\right)^{\otimes n} \\
&= \frac{1}{\sqrt{2^n}} \sum_{x \in \{0,1\}^n} |x\rangle .
\end{aligned}
$$

- Next, we query the phase oracle:

$$\frac{1}{\sqrt{2^n}} \sum_{x \in \{0,1\}^n} |x\rangle \xrightarrow{U_f} \frac{1}{\sqrt{2^n}} \sum_{x \in \{0,1\}^n} (-1)^{f(x)} |x\rangle.$$

- Finally we apply again the Hadamard Gate to each of the n qubits:

$$\frac{1}{\sqrt{2^n}} \sum_{x \in \{0,1\}^n} (-1)^{f(x)} |x\rangle \xrightarrow{H^{\otimes n}} \frac{1}{\sqrt{2^n}} \sum_{x \in \{0,1\}^n} (-1)^{f(x)} H^{\otimes n} |x\rangle.$$

This is the final state of the algorithm before the measurement, and to interpret this, let us focus on just one $H^{\otimes n}|x\rangle$, where $|x\rangle$ is a single n-bit string:

$$\begin{aligned} H^{\otimes n}|x\rangle &= H^{\otimes n}|x_{n-1}\ldots x_1 x_0\rangle \\ &= H|x_{n-1}\rangle\ldots H|x_1\rangle H|x_0\rangle. \end{aligned}$$

Depending on whether x_i is 0 or 1, $H|x_i\rangle$ is either $|+\rangle$ or $|-\rangle$. To account for the difference in sign between $|+\rangle$ and $|-\rangle$, we can write $H|x_i\rangle$ as

$$H|x_i\rangle = \frac{1}{\sqrt{2}}\Big[|0\rangle + (-1)^{x_i}|1\rangle\Big].$$

This way, when $x_i = 0$, $(-1)^{x_i} = 1$, and the result is $|+\rangle$, and when $x_i = 1$, $(-1)^{x_i} = -1$, and the result is $|-\rangle$. Writing each $H|x_i\rangle$ like this, we get

$$\begin{aligned}
&H|x_0\rangle H|x_1\rangle \ldots H|x_{n-1}\rangle \\
&= \frac{1}{\sqrt{2}}\Big[|0\rangle + (-1)^{x_{n-1}}|1\rangle\Big] \ldots \frac{1}{\sqrt{2}}\Big[|0\rangle + (-1)^{x_1}|1\rangle\Big]\frac{1}{\sqrt{2}}\Big[|0\rangle + (-1)^{x_0}|1\rangle\Big].
\end{aligned}$$

Multiplying out the terms, this becomes

$$\begin{aligned}
\frac{1}{\sqrt{2^n}}\Big[&|0\ldots000\rangle + (-1)^{x_0}|0\ldots001\rangle + (-1)^{x_1}|0\ldots010\rangle \\
&+ (-1)^{x_1}(-1)^{x_0}|0\ldots011\rangle + (-1)^{x_2}|0\ldots100\rangle + (-1)^{x_2}(-1)^{x_0}|0\ldots101\rangle \\
&+ (-1)^{x_2}(-1)^{x_1}|0\ldots110\rangle + (-1)^{x_2}(-1)^{x_1}(-1)^{x_0}|0\ldots111\rangle + \ldots\Big].
\end{aligned}$$

Writing $(-1)^{x_1}(-1)^{x_0}$ as $(-1)^{x_1+x_0}$, and similarly elsewhere, we get

$$\frac{1}{\sqrt{2^n}}\Big[|0\ldots000\rangle + (-1)^{x_0}|0\ldots001\rangle + (-1)^{x_1}|0\ldots010\rangle$$
$$+ (-1)^{x_1+x_0}|0\ldots011\rangle + (-1)^{x_2}|0\ldots100\rangle + (-1)^{x_2+x_0}|0\ldots101\rangle$$
$$+ (-1)^{x_2+x_1}|0\ldots110\rangle + (-1)^{x_2+x_1+x_0}|0\ldots111\rangle + \ldots\Big].$$

This is a sum over all n-bit strings $|z\rangle = |z_{n-1}\ldots z_1 z_0\rangle$, so it becomes

$$\frac{1}{\sqrt{2^n}}\sum_{z\in\{0,1\}^n}(-1)^{\sum_{i:z_i=1}x_i}|z\rangle.$$

For the negative sign, the power is the sum of the values of x_i such that $z_i = 1$. We can also write this sum using the *dot product* $x \cdot z$,

$$x \cdot z = x_{n-1}z_{n-1} + \cdots + x_1 z_1 + x_0 z_0.$$

- In this dot product, the only x_i's that survive are those where z_i=1. Using this notation, we get:

$$H^{\otimes n}|x\rangle = \frac{1}{\sqrt{2^n}} \sum_{z \in \{0,1\}^n} (-1)^{x \cdot z} |z\rangle.$$

- Plugging this into Eq, the final state of the algorithm before measurement is

$$\begin{aligned}\frac{1}{\sqrt{2^n}} \sum_{x \in \{0,1\}^n} (-1)^{f(x)} H^{\otimes n}|x\rangle &= \frac{1}{\sqrt{2^n}} \sum_{x \in \{0,1\}^n} (-1)^{f(x)} \frac{1}{\sqrt{2^n}} \sum_{z \in \{0,1\}^n} (-1)^{x \cdot z} |z\rangle \\ &= \sum_{z \in \{0,1\}^n} \left(\frac{1}{2^n} \sum_{x \in \{0,1\}^n} (-1)^{f(x) + x \cdot z} \right) |z\rangle.\end{aligned}$$

To see how measuring this state lets us determine whether the function is constant or balanced, let us calculate the probability of getting all zeros $|0\ldots00\rangle$. The amplitude of $|0\ldots00\rangle$ (right before measurement) is

$$\frac{1}{2^n}\sum_{x\in\{0,1\}^n}(-1)^{f(x)}.$$

This amplitude depends on whether $f(x)$ is constant or balanced:

- If f(x) is constant, then f(x) always outputs the same value, so f(x)= f(0...00) for all x, and the amplitude is

$$\frac{1}{2^n}\sum_{x\in\{0,1\}^n}(-1)^{f(0\ldots00)}=\frac{1}{2^n}(-1)^{f(0\ldots00)}2^n=(-1)^{f(0\ldots00)}.$$

- Taking the norm-square of this, if f(x) is constant, the probability of measuring $|0...00\rangle$ is 1.
- If f(x) is balanced, then $(-1)f(x)$ is 1 half the time and -1 the other half the time, so the amplitude is 0.
- Hence, if f(x) is balanced, the probability of measuring $|0...00\rangle$ is 0, so we are guaranteed to get something other than $|0...00\rangle$ when we measure.
- Thus, to determine if f is constant or balanced, we measure the n qubits, and if we get $|0...00\rangle$, the function is constant, and if we get anything else, the function is balanced.

MEASUREMENT INTERPRETATION

- **Case 1: Function is Constant**
- f(x) is same for all inputs
- All terms are identical
- → Amplitude = ±1
  → Probability = 1

Measurement always gives **|0...0⟩**

- **Case 2: Function is Balanced**
- Half terms are +1, half are -1
- → Sum cancels out
  → Amplitude = 0
  → Probability = 0

Never get **|0...0⟩**

FINAL DECISION RULE

- If measurement result = $|\mathbf{0...0}\rangle$

→ Function is **constant**

- If result ≠ $|\mathbf{0...0}\rangle$

→ Function is **balanced**

References

- Introduction to Classical and Quantum Computing by Thomas G. Wong
- Quantum Computation and Quantum Information by Michael A. Nielsen and Isaac L. Chuang
- https://youtu.be/7MdEHsRZxvo?si=3Bpyxtch5x0Qiblc

Thank You!