Simon's & Grover's Algorithm

By Prithiraj Rabha – 252IS028
Rohit Kumar Sah – 252IS030

Simon's Problem

Finding an XOR hidden Mask

- **We are given a black-box function f.**
- **Different inputs can produce the same output.**
- **These inputs occur in pairs.**
- **For each pair: The inputs differ by a fixed XOR mask s.**
- **This hidden string $s \neq 0$ is the same for all pairs.**
- **How do we find the s ?**

Formal Defn. of Simon's Problem

- **Function f : $\{0, 1\}^n \Rightarrow \{0, 1\}^n$**
- **There exists $s \in \{0, 1\}^n$, $s \neq 0$, such that.**

$$f(x) = f(x \oplus s)$$

- **f is 2-to-1**
- **For every x, the pair is** $(x, x \oplus s)$
- **Goal: To find the hidden s.**

Classical Approach to Simon's Problem

- **We query function *f(x)* for different inputs.**
- **We do this until we find *x* & *x'* such that:**

$$f(x)=f(x') \text{ and } (x \oplus x')=\{0^n, s\}$$

- **Issue with classical algorithm?**
- **Complexities: Exponential** $O(2^{(n-1)}+1)$ **&** $O(2^{\frac{n}{2}})$

A Basic Example

- **Lets take n = 3 and try to find *s***
- **Lets try finding *s* by the classical way**

x	***f(x)***
000	
001	
010	
011	
100	
101	
110	
111	

A Basic Example

- Lets take n = 3 and try to find *s*
- Say we randomly select an entry

  x = 010, *f(x)* = 000

  x' = 100, *f(x')* = 000
- Since $f(x)=f(x')$ and $x \neq x'$
- We do $(x \oplus x')$ and find *s* = 110.
- *S* is same for all.

x	*f(x)*
000	101
001	010
010	000
011	110
100	000
101	110
110	101
111	010

Simon's Algorithm & Circuit

- Initialize two $n-$qubit registers to $|0\rangle^{\otimes n}$
- Apply Hadamard transform to the first register (create superposition)
- Apply oracle $U_f : |x\rangle|0\rangle \rightarrow |x\rangle|f(x)\rangle$
- Measure second register $\rightarrow$ state collapses to $|x\rangle + |x \oplus s\rangle$
- Apply Hadamard transform again on first register
- Measure first register $\rightarrow$ obtain y such that $(y \cdot s = 0)(mod 2)$
- Repeat to collect multiple y values
- Solve linear equations over $\mathbb{F}_2$ to find s

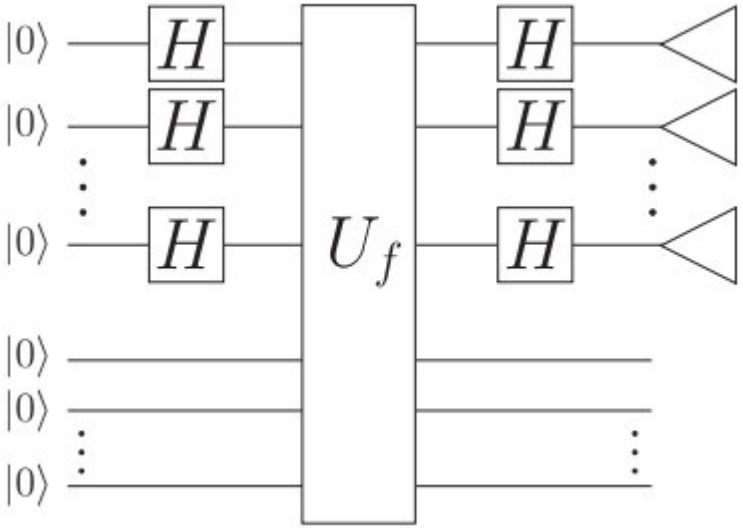

Example – Step 1 and 2 (Prepare states)

- **Suppose $f : \{0, 1\}^2 \Rightarrow \{0, 1\}^2$**

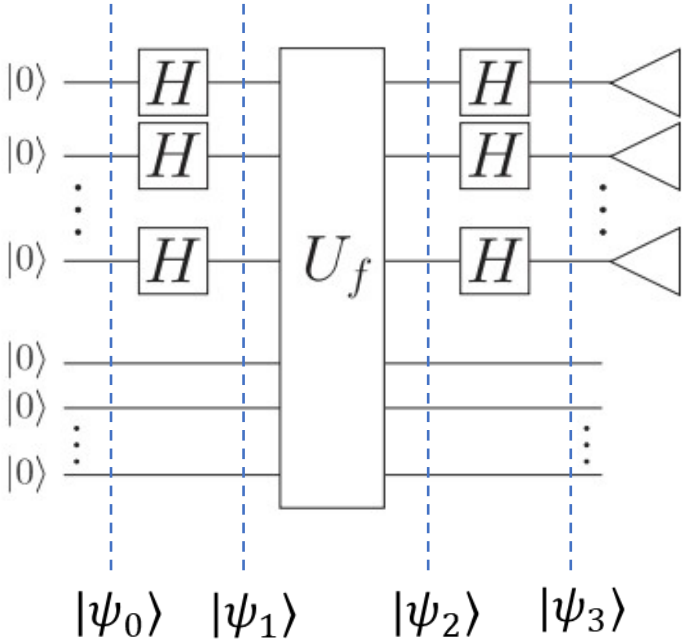

$$|\psi_0\rangle = |00\rangle|00\rangle$$

$$|\psi_1\rangle = (H^{\otimes n}|00\rangle)|00\rangle$$

$$|\psi_1\rangle = \frac{1}{\sqrt{2^2}} \sum_{x \in 0,1^2} |x\rangle|00\rangle$$

$$|\psi_1\rangle = \frac{1}{2}\left(|00\rangle + |01\rangle + |10\rangle + |11\rangle\right)|00\rangle$$

Example – Step 3 (Function Evaluation)

- **Let $f : \{0, 1\}^2 \Rightarrow \{0, 1\}^2$ be defined as:**
  $f(00_2) = 10_2$, $f(01_2) = 01_2$, $f(10_2) = 10_2$, $f(11_2) = 01_2$

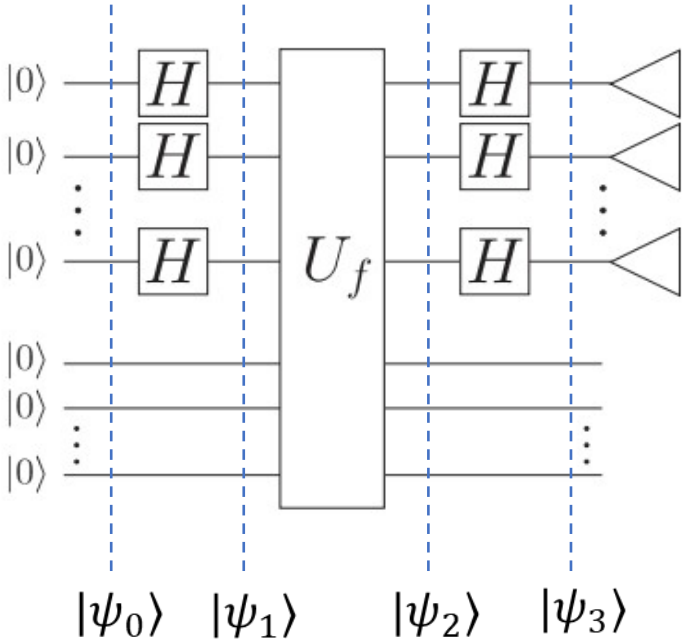

$$|\psi_2\rangle = U_f|\psi_1\rangle$$

$$|\psi_2\rangle = \frac{1}{2}\sum_{x\in\{0,1\}^2} |x\rangle|f(x)\rangle$$

$$|\psi_2\rangle = \frac{1}{2}\left(|00\rangle|f(00)\rangle + |01\rangle|f(01)\rangle + |10\rangle|f(10)\rangle + |11\rangle|f(11)\rangle\right)$$

$$|\psi_2\rangle = \frac{1}{2}\left(|00\rangle|10\rangle + |01\rangle|01\rangle + |10\rangle|10\rangle + |11\rangle|01\rangle\right)$$

Example – Step 4 & 5 (Measurement & Hadamard gate on 1st register)

- **You can ignore the second register, this makes the calculation easier.**

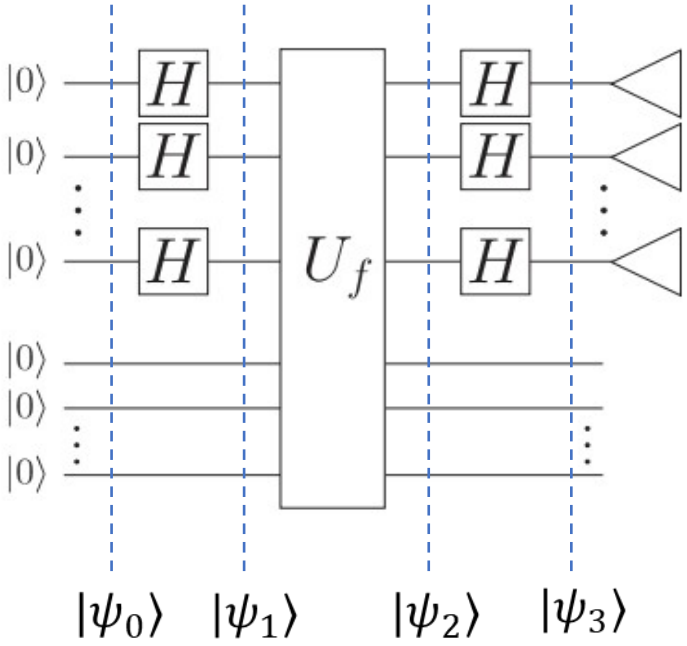

$$|\psi_2\rangle = \tfrac{1}{2}(|00\rangle|10\rangle + |01\rangle|01\rangle + |10\rangle|10\rangle + |11\rangle|01\rangle)$$
$$|\psi_2\rangle = \tfrac{1}{\sqrt{2}}(|00\rangle + |10\rangle)\,|10\rangle$$

or

$$|\psi_2\rangle = \tfrac{1}{\sqrt{2}}(|01\rangle + |11\rangle)\,|01\rangle$$
$$|\psi_3\rangle = (H^{\otimes 2})\tfrac{1}{\sqrt{2}}(|00\rangle + |10\rangle)$$

$$H^{\otimes 2}|00\rangle = \tfrac{1}{2}(|00\rangle + |01\rangle + |10\rangle + |11\rangle)$$

$$H^{\otimes 2}|10\rangle = \tfrac{1}{2}(|00\rangle + |01\rangle - |10\rangle - |11\rangle)$$

$$|\psi_3\rangle = \tfrac{1}{\sqrt{2}} \cdot \tfrac{1}{2}\left[(|00\rangle + |01\rangle + |10\rangle + |11\rangle) + (|00\rangle + |01\rangle - |10\rangle - |11\rangle)\right]$$
$$|\psi_3\rangle = \tfrac{1}{\sqrt{2}}(|00\rangle + |01\rangle)$$

Example – Step 6 (Measurement of 1st register)

- **Finding *s***
  - $|\psi_3\rangle = \frac{1}{\sqrt{2}}(|00\rangle + |01\rangle)$
  - Measure $\rightarrow y \in \{00, 01\}$
  - Constraint: $y \cdot s = 0 \pmod 2$
  - $y = 00 \rightarrow$ no info
    $y = 01 \rightarrow s_2 = 0$
  - Repeat $\rightarrow$ solve for s

Introduction to Grover's Algorithm

The Quadratic Speedup

Grover's Algorithm provides a quadratic speedup for searching an unstructured database using quantum mechanics.

Classical Search:

- Average: $N/2$ checks
- Worst Case: $O(N)$

Quantum Search:

- Optimal Checks: $\approx \sqrt{N}$
- Complexity: $O(\sqrt{N})$

Goal: Find a marked item w in an unsorted list of size N.

The Three Pillars of Grover's Algorithm

1. Initialization

   Prepares a **Uniform Superposition** of all N possible states using Hadamard gates ($H^{\otimes n}$).
   Intuition: We start by looking at every possibility simultaneously with equal probability.

2. The Oracle (U_w)

   A "black box" that recognizes the solution and performs a **Phase Flip**.

$$U_w |x\rangle = (-1)^{f(x)} |x\rangle$$

   Intuition: It tags the correct answer by flipping its amplitude to negative, while leaving others unchanged.

3. Diffusion Operator (D)

   The engine of **Amplitude Amplification**. It performs an **Inversion about the Mean**.
   Intuition: It uses the negative sign from the Oracle to "pull" all the probability into the marked state.

Visualizing the Three Pillars

Step 1: Superposition

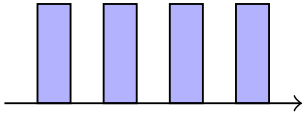

All states equal.

Step 2: Phase Flip

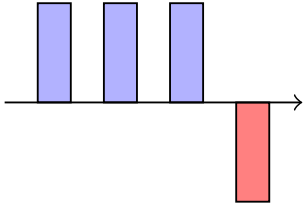

Target is marked (-).

Step 3: Inversion

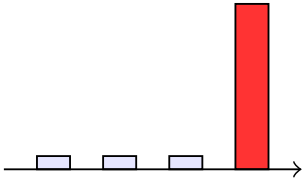

Target is amplified.

Summary

The Oracle **marks** the state, but the Diffusion operator **finds** it by concentrating the system's probability into that single point.

Quantum Circuit Representation

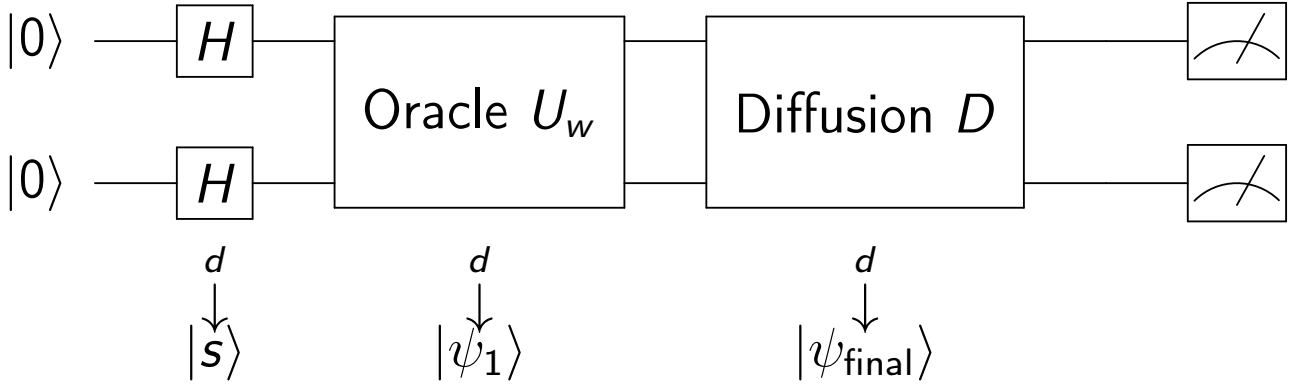

- **Hadamard (H):** Creates the superposition $|s\rangle$.
- **Grover Iteration:** The combination of Oracle and Diffusion.

Numerical Analysis: Initialization

Start with $n = 2$ qubits ($|00\rangle$). After $H^{\otimes 2}$:

Uniform Superposition $|\psi_0\rangle$

$$|\psi_0\rangle = \frac{1}{2}(|00\rangle + |01\rangle + |10\rangle + |11\rangle)$$

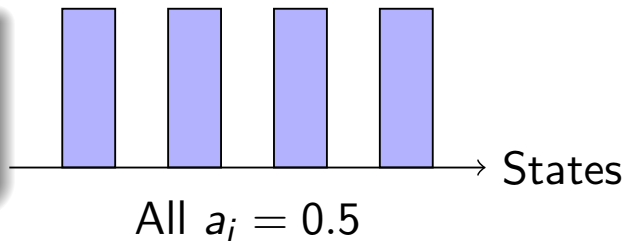

- All amplitudes $a_i = 1/2$
- All probabilities $P_i = 1/4$

Numerical Analysis: The Oracle

Assume the marked state is $|w\rangle = |11\rangle$.

The Oracle U_w flips the phase:

$$|\psi_1\rangle = \frac{1}{2}(|00\rangle + |01\rangle + |10\rangle - |11\rangle)$$

- Amplitudes: $\{1/2, 1/2, 1/2, -1/2\}$
- Probability is still 1/4 for all, but the "direction" has changed.

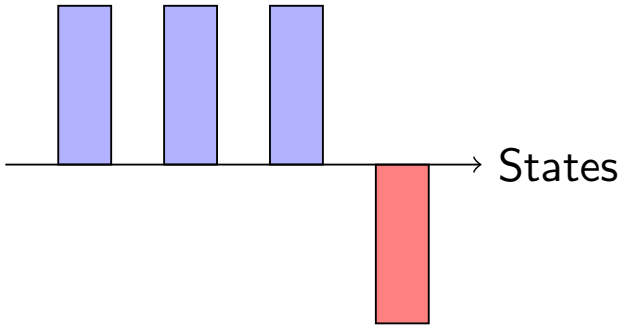

Phase Flip on $|11\rangle$

Numerical Analysis: Diffusion Calculation

The operator D updates amplitudes using $a' = 2\bar{a} - a$.

Numerical Analysis: Diffusion Calculation

The operator D updates amplitudes using $a' = 2\bar{a} - a$.

Step 1: Calculate the Mean ($\bar{a}$)

$$\bar{a} = \frac{1}{4}\left(\frac{1}{2} + \frac{1}{2} + \frac{1}{2} + (-\frac{1}{2})\right) = \frac{1}{4}$$

Numerical Analysis: Diffusion Calculation

The operator D updates amplitudes using $a' = 2\bar{a} - a$.

Step 1: Calculate the Mean ($\bar{a}$)

$$\bar{a} = \frac{1}{4}\left(\frac{1}{2} + \frac{1}{2} + \frac{1}{2} + (-\frac{1}{2})\right) = \frac{1}{4}$$

Step 2: Reflect about the Mean

- **For Unmarked states:** $a' = 2(1/4) - 1/2 = 0$
- **For Marked state $|11\rangle$:** $a' = 2(1/4) - (-1/2) = 1$

Numerical Analysis: Final Result

Success State

$$|\psi_{\text{final}}\rangle = |11\rangle$$

- Probability of $|11\rangle = |1|^2 = 100\%$
- Probability of others $= 0\%$

Conclusion: For $N = 4$, we find the result with certainty in **one iteration**.

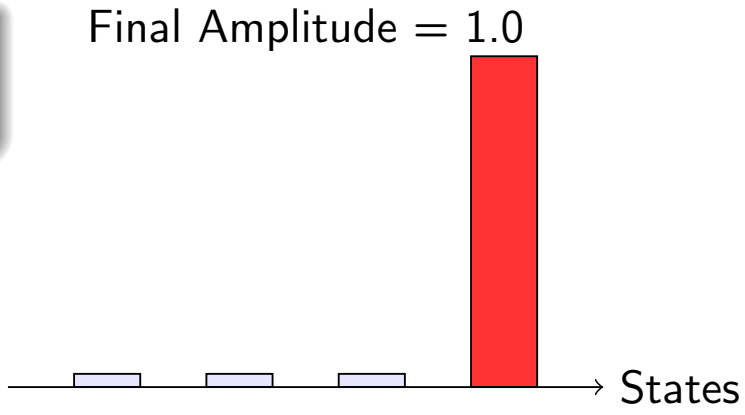

N=8: Step 1 - Initialization

Creating the Superposition

- We start with 3 qubits in the state $|000\rangle$.
- Apply $H^{\otimes 3}$ to create $2^3 = 8$ states.

Uniform Amplitude

$$a_i = \frac{1}{\sqrt{8}} \approx 0.3536$$

Every state has an equal probability:

$$P_i = |0.3536|^2 = 12.5\%$$

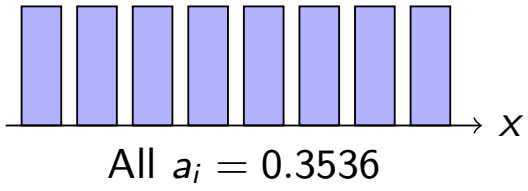

N=8: Step 2 - The Oracle (U_w)

Marking the Target State

- Assume our target state is $w = |111\rangle$.
- The Oracle flips the phase of w only.

Phase Inversion

- Unmarked ($x \neq w$): $a_i = 0.3536$
- Marked ($x = w$): $a_w = -0.3536$

Note: The probability is still 12.5%. We have only "tagged" the state with a negative sign.

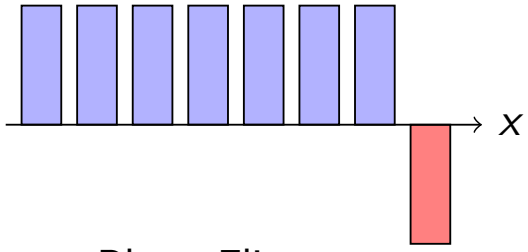

Phase Flip on w

N=8: Step 3 - Diffusion Calculation

The Inversion about the Mean ($a' = 2\bar{a} - a$)

1. Calculate Mean Amplitude ($\bar{a}$):

$$\bar{a} = \frac{(7 \times 0.3536) + (-0.3536)}{8} = \frac{2.1216}{8} = 0.2652$$

2. Reflect across the Mean:

- **Unmarked:** $a' = 2(0.2652) - 0.3536 = 0.1768$
- **Marked:** $a' = 2(0.2652) - (-0.3536) = 0.8840$

Result after 1 Iteration

The target's probability jumps from **12.5%** to **78.1%**. Because the unmarked states are not yet zero, a second rotation is needed.

N=8: Round 2 - Second Oracle Application

Input from Iteration 1

- Unmarked amplitudes: $a_{unmarked} = 0.1768$
- Marked amplitude: $a_{marked} = 0.8840$

Oracle Operation (U_w)

The Oracle flips the phase of the target $|w\rangle$ once more:

- Unmarked states: $a_i = 0.1768$
- Marked state: $a_w = -0.8840$

The target is now "deeply" negative, creating a massive contrast against the positive mean.

N=8: Round 2 - Second Diffusion Calculation

1. New Mean Amplitude ($\bar{a}_2$)

$$\bar{a}_2 = \frac{(7 \times 0.1768) + (-0.8840)}{8} = \frac{1.2376 - 0.8840}{8} = 0.0442$$

2. Inversion about the Mean ($a'' = 2\bar{a}_2 - a'$)

- **Unmarked Reflection:** $2(0.0442) - 0.1768 = -0.0884$
- **Marked Reflection:** $2(0.0442) - (-0.8840) = 0.9724$

Success Probability after 2 Iterations

$$P_{success} = |0.9724|^2 \approx 94.56\%$$

With two steps, the system has effectively "converged" on the correct answer.

Final State: $N = 8$ Visualization

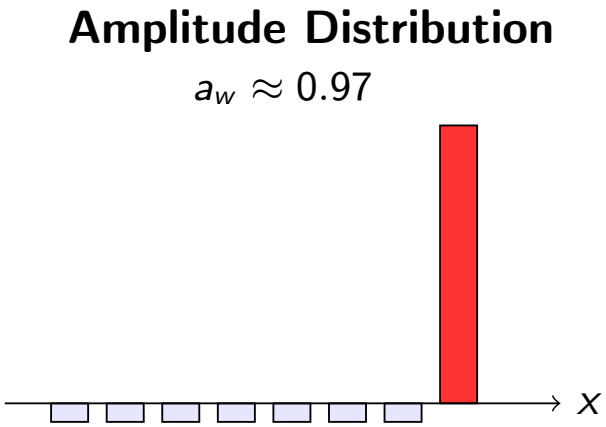

- **Why stop here?** The optimal number of iterations is $k \approx \frac{\pi}{4}\sqrt{8} \approx 2.22$.
- **Over-rotation:** If we performed a 3rd iteration, the amplitude of the marked state would actually **decrease**.
- **Result:** A success probability of $\approx 95\%$ is the practical limit for $N = 8$ searching for one item.

Real-World Applications of Grover's Algorithm

Where Quantum Search Excels

- **Symmetric Cryptography:** Effectively halves the bit-strength of AES keys. A 256-bit key becomes as "easy" to crack as a 128-bit key.
- **Database Searching:** Finding a specific entry in an unstructured list of N items in $\sqrt{N}$ steps.
- **Optimization:** Accelerating solvers for NP-Hard problems (e.g., Traveling Salesman) by speeding up the search for the global minimum.
- **Pattern Matching:** Identifying sequences in genomic data or complex signal processing.

Quantum Advantage

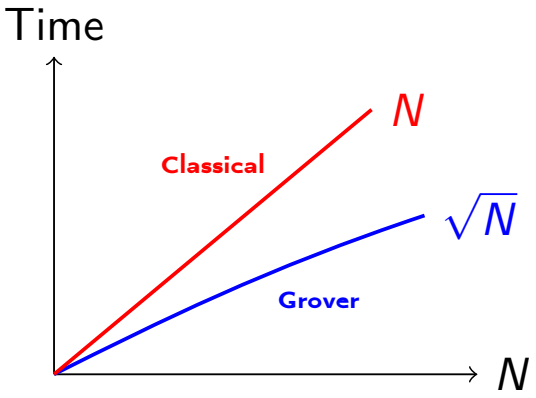

Current Limitations and Challenges

1. Quadratic vs. Exponential

Unlike Shor's Algorithm (exponential speedup), Grover's is "only" quadratic. For small N, the overhead of a quantum computer might make it slower than a classical supercomputer.

2. Oracle Complexity

The "Oracle" U_w is not magic; it must be a physical circuit. If the circuit to recognize the target is too complex, the time taken to run the Oracle may outweigh the $\sqrt{N}$ advantage.

3. Hardware Sensitivity (Decoherence)

Grover's requires many consecutive operations. In current "Noisy Intermediate-Scale Quantum" (NISQ) devices, noise and decoherence can flip bits before the algorithm completes, destroying the result.

The Bottom Line

Grover's Algorithm is mathematically optimal, but its practical implementation requires error-corrected quantum hardware.

References & Further Reading

- **Textbook:** Wong, T. G. (2022). *Introduction to Classical and Quantum Computing*.
- **Video Lecture:** UV Physics. (2025). *8.1 Grover's Algorithm (Introduction)* [Video]. YouTube. **https://youtu.be/RqNDAu1cCJg**
- **Online Resource:** Wikipedia contributors. (2024). *Grover's algorithm*. Wikipedia, The Free Encyclopedia. **https://en.wikipedia.org/wiki/Grover's_algorithm**

Thank You!

Questions?