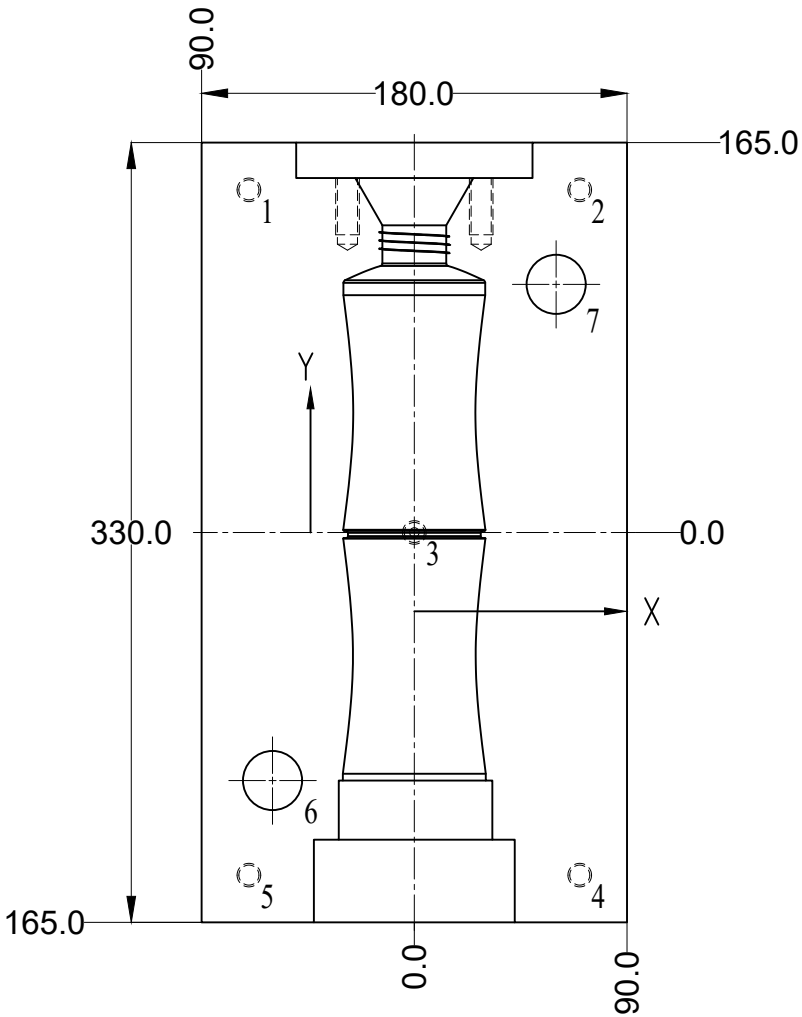

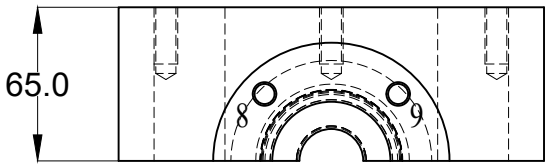

260 X 380 X 48

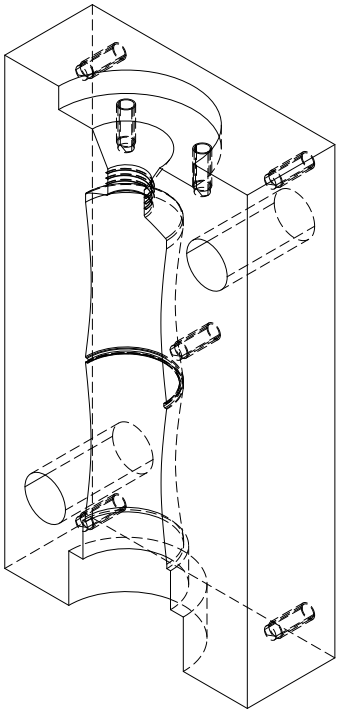

Coordinates of all bolts and dowels to be placed			
Hole No.	X	Y	Hole Specs
1	-70.0	145.0	Ø 8.5 to 28.0 ; M10X1.5 to 24.0
2	70.0	145.0	
3	0.0	0.0	
4	70.0	-145.0	
5	-70.0	-145.0	
6	60.0	105.0	Ø 25.0 thru all ;
7	-60.0	-105.0	
8	-28.3	28.3	Ø 8.5 to 28.0 ; M10 X 1.5 to 24.0
9	28.3	28.3	

DETAIL NO. 3	QTY. 1	DRAWING SIZE A4	COMPANY Shree Saigan Industries
MAT'L MS	TREATMENT		TOOL DESC. PET Bottle blow mould
MAT'L SIZE 180 x 330 x 65			SW FILE NAME Cavity_plate_1 — REV. –
TOLERANCES (UNLESS OTHERWISE SPECIFIED) ± .005 FOR SCREW HOLE LOCATIONS ± .0002 FOR DOWEL HOLE LOCATIONS ± .010 ON TWO-PLACE DIMENSIONS ± .001 ON THREE-PLACE DIMENSIONS ± .0005 ON FOUR PLACE DIMENSIONS ± 1° ON ANGLES	MM DIMENSIONS IN MM 1st ANGLE PROJECTION		SW DESC. — PROJECT NAME PET Bottle
			SW COMMENT — DRAWN BY Samyak D — TOOL NO.
			DATE DRAWN 04/05/2022 — SCALE — CHECKED BY Amol S — SHEET OF