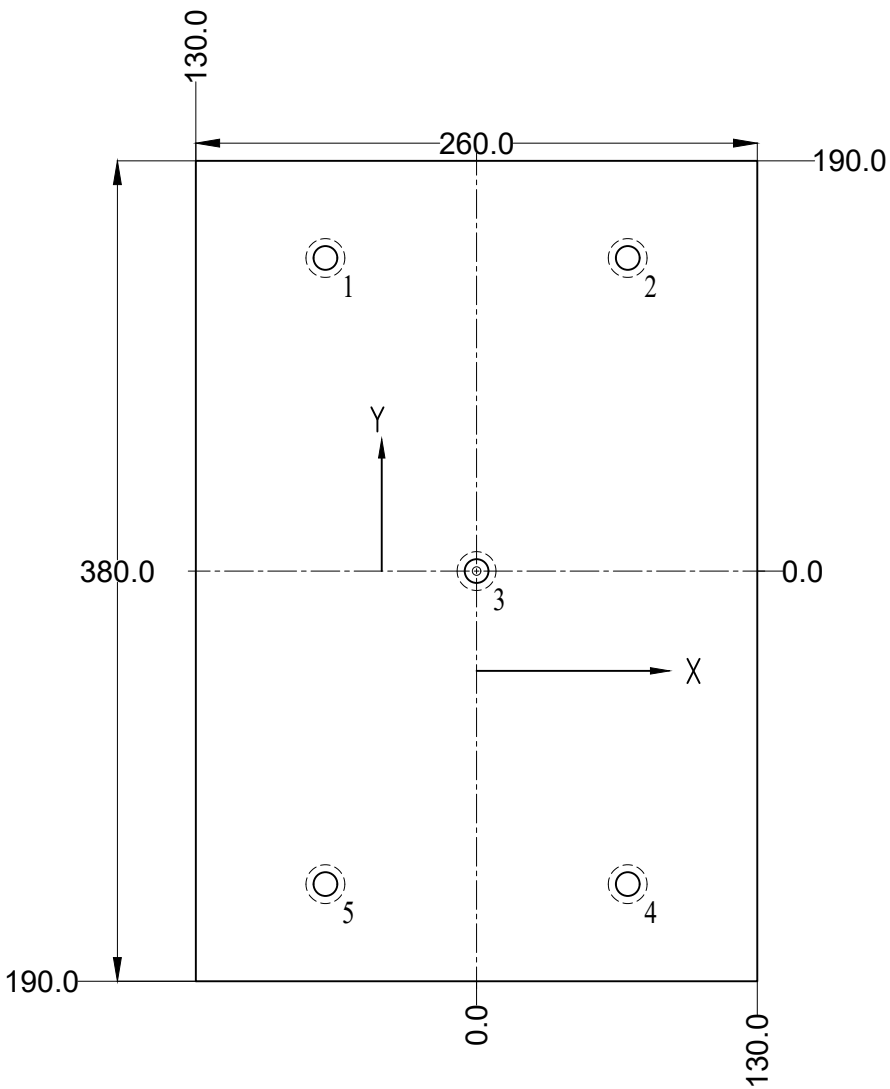

Coordinates of all bolts and dowels to be placed			
Hole No.	X	Y	Hole Specs
1	-70.0	145.0	Ø 11.0 thru all ; Ø 18.0 to depth 11.0 on the farside
2	70.0	145.0	
3	0.0	0.0	
4	70.0	-145.0	
5	-70.0	-145.0	

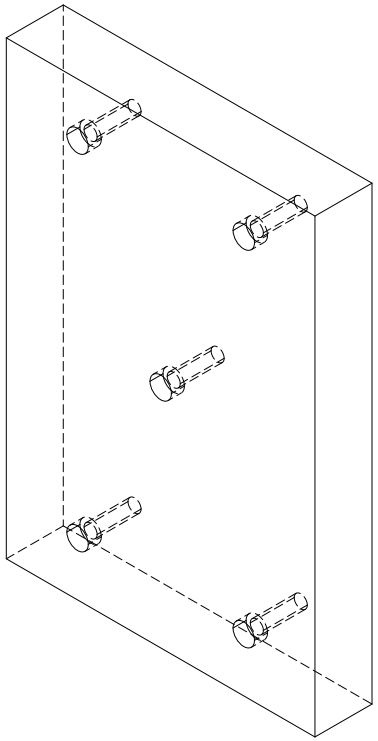

DETAIL NO. 1	QTY. 1	DRAWING SIZE A4	COMPANY Shree Saigan Industries
MAT'L MS	TREATMENT		TOOL DESC. PET Bottle blow mould
MAT'L SIZE 260 X 380 X 48			SW FILE NAME Back Support Plate / REV. -
TOLERANCES (UNLESS OTHERWISE SPECIFIED) ± .005 FOR SCREW HOLE LOCATIONS ± .0002 FOR DOWEL HOLE LOCATIONS ± .010 ON TWO-PLACE DIMENSIONS ± .001 ON THREE-PLACE DIMENSIONS ± .0005 ON FOUR PLACE DIMENSIONS ± 1° ON ANGLES	MM DIMENSIONS IN MM 1st ANGLE PROJECTION		SW DESC. / PROJECT NAME PET Bottle
			SW COMMENT / DRAWN BY Samyak D / TOOL NO.
			DATE DRAWN 04/05/2022 / SCALE / CHECKED BY Amol S / SHEET OF