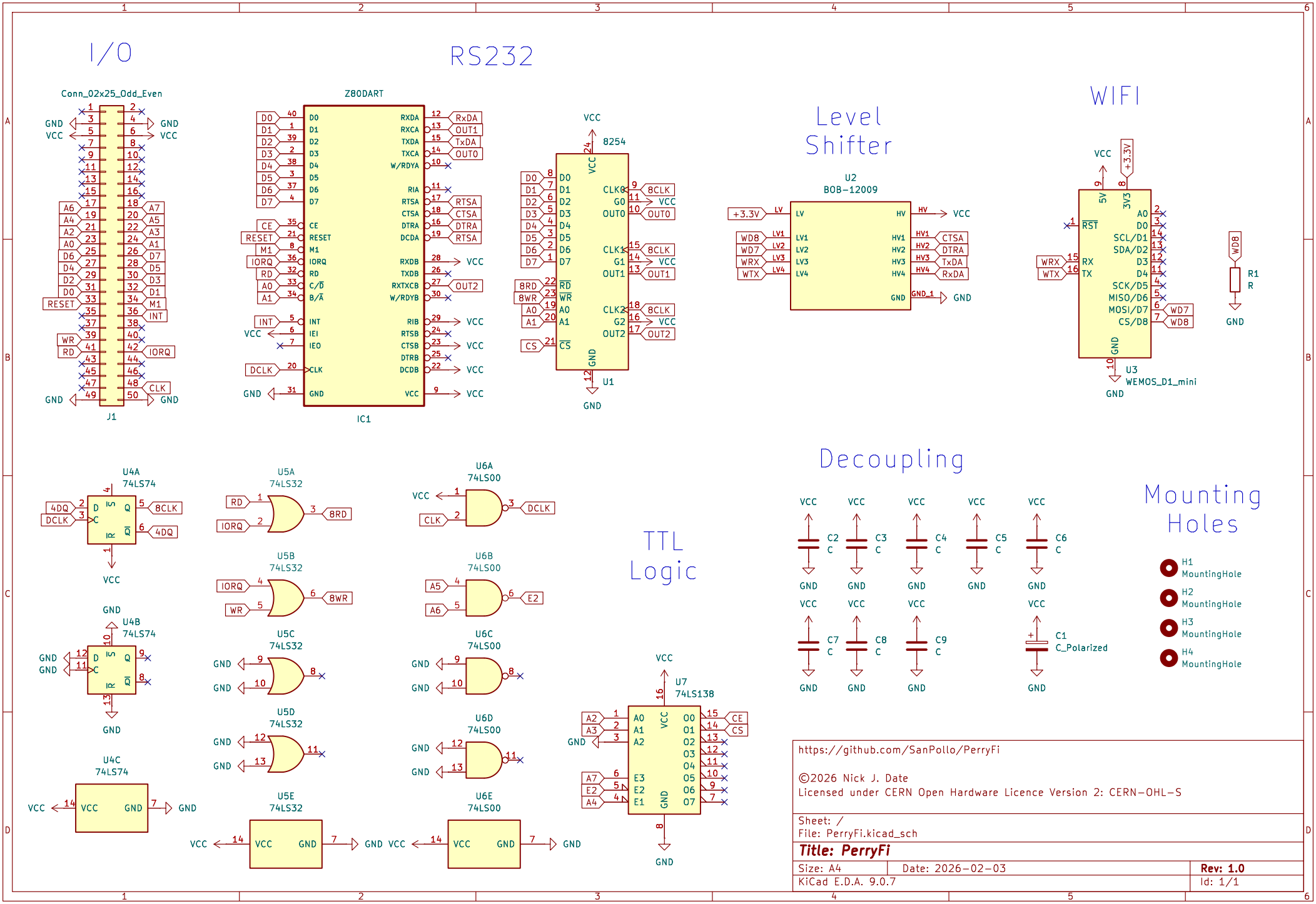
I/O
RS232
Level Shifter
WIFI
Decoupling
Mounting Holes
TTL Logic
Conn_02x25_Odd_Even
J1
Z80DART
IC1
8254
U1
U2
BOB-12009
U3
WEMOS_D1_mini
U4A
74LS74
U4B
74LS74
U4C
74LS74
U5A
74LS32
U5B
74LS32
U5C
74LS32
U5D
74LS32
U5E
74LS32
U6A
74LS00
U6B
74LS00
U6C
74LS00
U6D
74LS00
U6E
74LS00
U7
74LS138
C1
C_Polarized
H1
MountingHole
H2
MountingHole
H3
MountingHole
H4
MountingHole
https://github.com/SanPollo/PerryFi
©2026 Nick J. Date
Licensed under CERN Open Hardware Licence Version 2: CERN-OHL-S
Sheet: /
File: PerryFi.kicad_sch
Title: PerryFi
Size: A4
Date: 2026-02-03
Rev: 1.0
KiCad E.D.A. 9.0.7
Id: 1/1