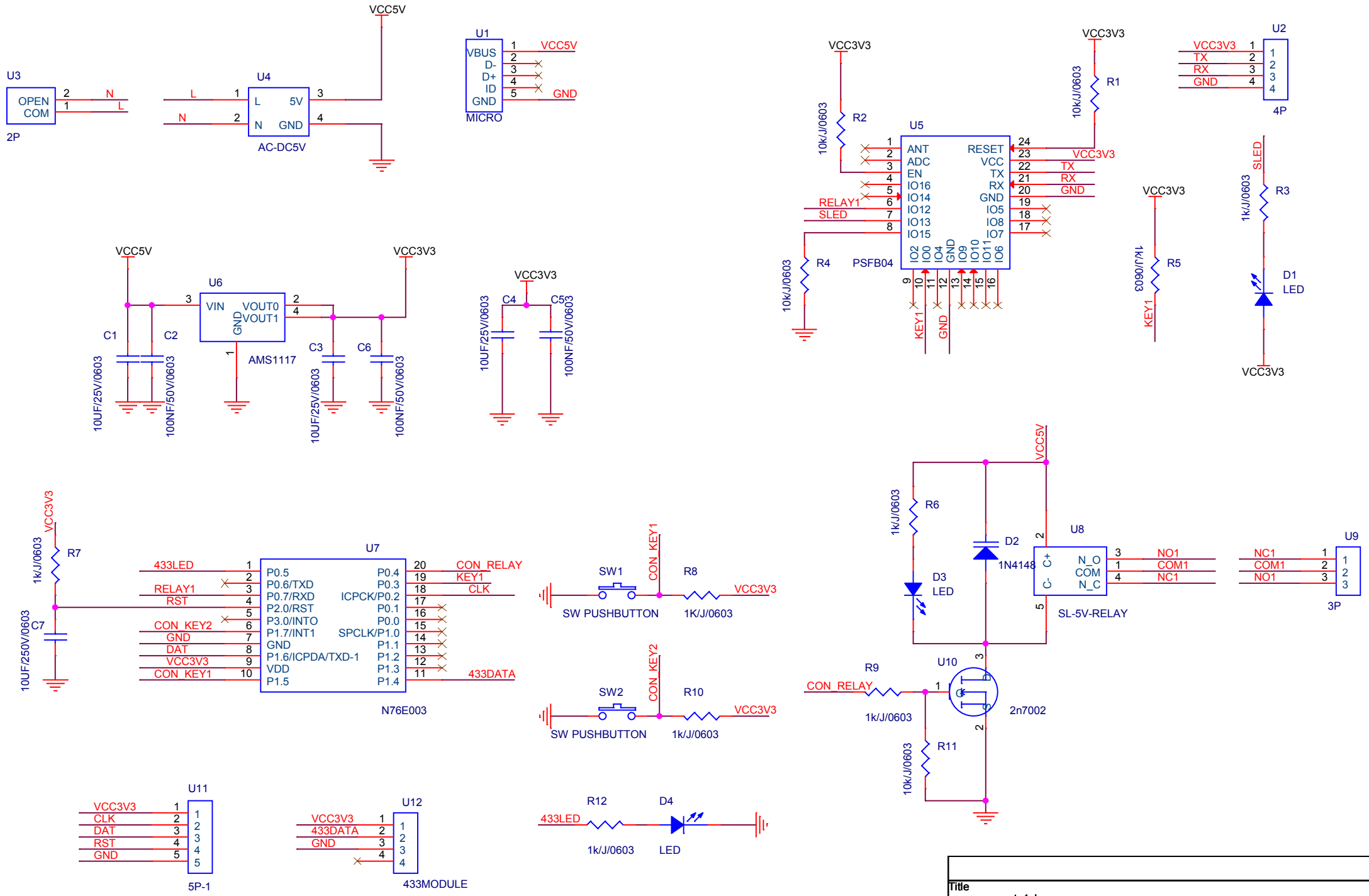

Title	sant_1ch
Size A4	Document Number <Doc>
Rev	V1.0
Date:	Friday, August 18, 2017
Sheet	1 of 1