UNIT – IV Design Model and methods : Design model, Architectural design, Designing traditional components, User interface analysis and design, Procedural design, Design for Real time systems

The Design model

The design model can be viewed in two different dimensions as illustrated in Figure 8.4. The *process dimension* indicates the evolution of the design model as design tasks are executed as part of the software process. The *abstraction dimension* represents the level of detail as each element of the analysis model is transformed into a design equivalent and then refined iteratively. Referring to Figure 8.4, the dashed line indicates the boundary between the analysis and design models. In some cases, a clear distinction between the analysis and design models is possible. In other cases, the analysis model slowly blends into the design and a clear distinction is less obvious.

The elements of the design model use many of the same UML diagrams7 that were used in the analysis model. The difference is that these diagrams are refined and elaborated as part of design; more implementation-specific detail is provided, and architectural structure and style, components that reside within the architecture, and interfaces between the components and with the outside world are all emphasized.

FIGURE 8.4 Dimensions of the design model

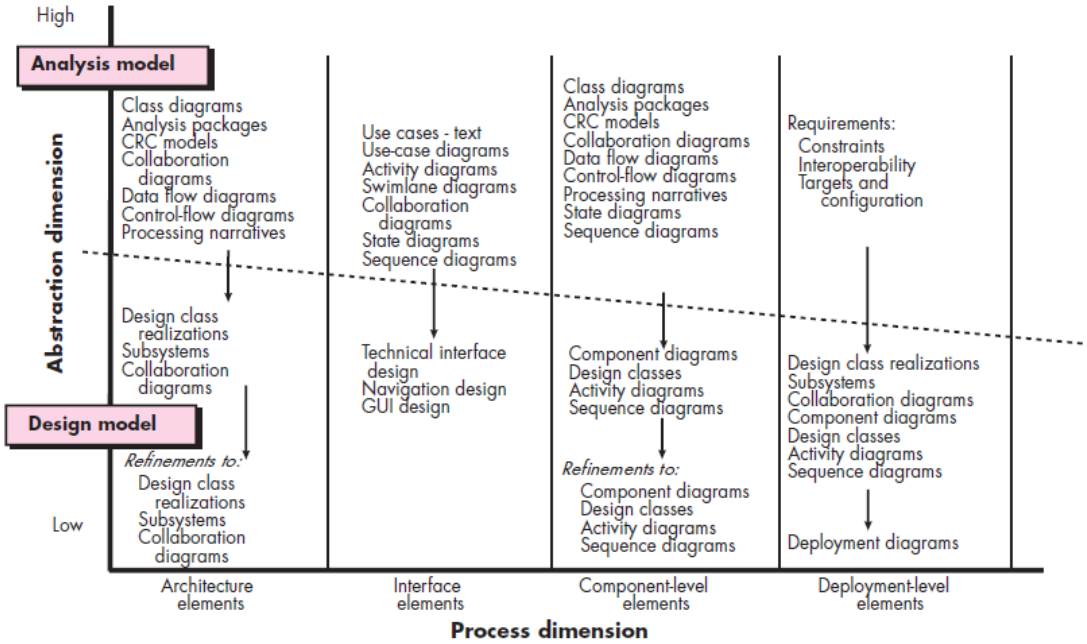

You should note, however, that model elements indicated along the horizontal axis are not always developed in a sequential fashion. In most cases preliminary architectural design sets the stage and is followed by interface design and component-level design, which often occur in parallel. The deployment model is usually delayed until the design has been fully developed.

You can apply design patterns (Chapter 12) at any point during design. These patterns enable you to apply design knowledge to domain-specific problems that have been encountered and solved by others.

1 .Data Design Elements

Like other software engineering activities, data design (sometimes referred to as *data architecting*) creates a model of data and/or information that is represented at a high level of abstraction (the customer/user's view of data). This data model is then refined into progressively more implementation-specific representations that can be processed by the computer-based system. In many software applications, the architecture of the data will have a profound influence on the architecture of the software that must process it.

The structure of data has always been an important part of software design. At the program component level, the design of data structures and the associated algorithms required to manipulate them is essential to the creation of high-quality applications. At the application level, the translation of a data model (derived as part of requirements engineering) into a database is pivotal to achieving the business objectives of a system. At the business level, the collection of information stored in disparate databases and reorganized into a "data warehouse" enables data mining or knowledge discovery that can have an impact on the success of the business itself. In every case, data design plays an important role. Data design is discussed in more detail in Chapter 9.

8.4.2 Architectural Design Elements

The *architectural design* for software is the equivalent to the floor plan of a house. The floor plan depicts the overall layout of the rooms; their size, shape, and relationship

to one another; and the doors and windows that allow movement into and out of the rooms. The floor plan gives us an overall view of the house. Architectural design elements give us an overall view of the software.

The architectural model [Sha96] is derived from three sources: (1) information about the application domain for the software to be built; (2) specific requirements model elements such as data flow diagrams or analysis classes, their relationships and collaborations for the problem at hand; and (3) the availability of architectural styles (Chapter 9) and patterns (Chapter 12).

The architectural design element is usually depicted as a set of interconnected subsystems, often derived from analysis packages within the requirements model. Each subsystem may have it's own architecture (e.g., a graphical user interface might be structured according to a preexisting architectural style for user interfaces). Techniques for deriving specific elements of the architectural model are presented in Chapter 9.

8.4.3 Interface Design Elements

The interface design for software is analogous to a set of detailed drawings (and specifications) for the doors, windows, and external utilities of a house. These drawings depict the size and shape of doors and windows, the manner in which they operate, the way in which utility connections (e.g., water, electrical, gas, telephone) come into the house and are distributed among the rooms depicted in the floor plan. They tell us where the doorbell is located, whether an intercom is to be used to announce a visitor's presence, and how a security system is to be installed. In essence, the detailed drawings (and specifications) for the doors, windows, and external utilities tell us how things and information flow into and out of the house and within the rooms that are part of the floor plan. The interface design elements for software depict information flows into and out of the system and how it is communicated among the components defined as part of the architecture.

There are three important elements of interface design: (1) the user interface (UI); (2) external interfaces to other systems, devices, networks, or other producers or consumers of information; and (3) internal interfaces between various design components. These interface design elements allow the software to communicate externally and enable internal communication and collaboration among the components that populate the software architecture.

UI design (increasingly called *usability design*) is a major software engineering action and is considered in detail in Chapter 11. Usability design incorporates aesthetic elements (e.g., layout, color, graphics, interaction mechanisms), ergonomic elements (e.g., information layout and placement, metaphors, UI navigation), and technical elements (e.g., UI patterns, reusable components). In general, the UI is a unique subsystem within the overall application architecture.

The design of external interfaces requires definitive information about the entity to which information is sent or received. In every case, this information should be collected during requirements engineering (Chapter 5) and verified once the interface design commences.[8] The design of external interfaces should incorporate error checking and (when necessary) appropriate security features.

The design of internal interfaces is closely aligned with component-level design (Chapter 10). Design realizations of analysis classes represent all operations and the messaging schemes required to enable communication and collaboration between operations in various classes. Each message must be designed to accommodate the requisite information transfer and the specific functional requirements of the

FIGURE 8.5

Interface representation for Control-Panel

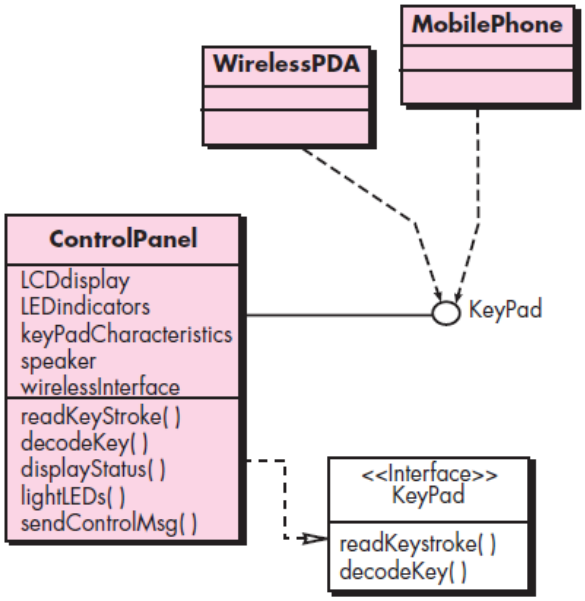

is characterized as a *realization.* That is, part of the behavior of **ControlPanel** will be implemented by realizing **KeyPad** operations. These operations will be provided to other classes that access the interface.

Component-Level Design Elements

The component-level design for software is the equivalent to a set of detailed drawings (and specifications) for each room in a house. These drawings depict wiring and plumbing within each room, the location of electrical receptacles and wall switches, faucets, sinks, showers, tubs, drains, cabinets, and closets. They also describe the flooring to be used, the moldings to be applied, and every other detail associated with a room. The component-level design for software fully describes the internal detail of each software component. To accomplish this, the component-level design defines data structures for all local data objects and algorithmic detail for all processing that occurs within a component and an interface that allows access to all component operations (behaviors).

Within the context of object-oriented software engineering, a component is represented in UML diagrammatic form as shown in Figure 8.6. In this figure, a component named **SensorManagement** (part of the *SafeHome* security function) is represented. A dashed arrow connects the component to a class named **Sensor** that is assigned to it. The **SensorManagement** component performs all functions associated with *SafeHome* sensors including monitoring and configuring them. Further discussion of component diagrams is presented in Chapter 10. The design details of a component can be modeled at many different levels of abstraction. A UML activity diagram can be used to represent processing logic. Detailed procedural flow for a component can be represented using either pseudocode (a programming language-like representation described in Chapter 10) or some other diagrammatic form (e.g., flowchart or box diagram). Algorithmic structure follows the rules established for structured programming (i.e., a set of constrained procedural constructs). Data structures, selected based on the nature of the data objects to be processed, are usually modeled using pseudocode or the programming language to be used for implementation.

8.4.5 Deployment-Level Design Elements

Deployment-level design elements indicate how software functionality and subsystems will be allocated within the physical computing environment that will support

ARCHITECTURAL DESIGN

In their landmark book on the subject, Shaw and Garlan [Sha96] discuss software architecture in the following manner:

> Ever since the first program was divided into modules, software systems have had architectures, and programmers have been responsible for the interactions among the modules and the global properties of the assemblage. Historically, architectures have been implicit—accidents of implementation, or legacy systems of the past. Good software developers have often adopted one or several architectural patterns as strategies for system organization, but they use these patterns informally and have no means to make them explicit in the resulting system.

Today, effective software architecture and its explicit representation and design have become dominant themes in software engineering.

9.1.1 What Is Architecture?

When you consider the architecture of a building, many different attributes come to mind. At the most simplistic level, you think about the overall shape of the physical structure. But in reality, architecture is much more. It is the manner in which the various components of the building are integrated to form a cohesive whole. It is the way in which the building fits into its environment and meshes with other buildings in its vicinity. It is the degree to which the building meets its stated purpose and satisfies the needs of its owner. It is the aesthetic feel of the structure—the visual impact of the building—and the way textures, colors, and materials are combined to create the external facade and the internal "living environment." It is small details—the design of lighting fixtures, the type of flooring, the placement of wall hangings, the list is almost endless. And finally, it is art.

Why Is Architecture Important?

In a book dedicated to software architecture, Bass and his colleagues [Bas03] identify three key reasons that software architecture is important:

- Representations of software architecture are an enabler for communication between all parties (stakeholders) interested in the development of a computer-based system.
- The architecture highlights early design decisions that will have a profound impact on all software engineering work that follows and, as important, on the ultimate success of the system as an operational entity.
- Architecture "constitutes a relatively small, intellectually graspable model of how the system is structured and how its components work together" [Bas03]. The architectural design model and the architectural patterns contained within it are transferable. That is, architecture genres, styles, and patterns (Sections 9.2 through 9.4) can be applied to the design of other systems and represent a set of abstractions that enable software engineers to describe architecture in predictable ways.

9.1.3 Architectural Descriptions

Each of us has a mental image of what the word *architecture* means. In reality, however, it means different things to different people. The implication is that different stakeholders will see an architecture from different viewpoints that are driven by different sets of concerns. This implies that an architectural description is actually a set of work products that reflect different views of the system.

For example, the architect of a major office building must work with a variety of different stakeholders. The primary concern of the owner of the building (one stakeholder) is to ensure that it is aesthetically pleasing and that it provides sufficient office space and infrastructure to ensure its profitability. Therefore, the architect must develop a description using views of the building that address the owner's concerns. The viewpoints used are a three-dimensional drawings of the building (to illustrate the aesthetic view) and a set of two-dimensional floor plans to address this stakeholder's concern for office space and infrastructure.

Architectural Decisions

Each view developed as part of an architectural description addresses a specific stakeholder concern. To develop each view (and the architectural description as a whole) the system architect considers a variety of alternatives and ultimately decides on the specific architectural features that best meet the concern. Therefore, architectural decisions themselves can be considered to be one view of the architecture.

The reasons that decisions were made provide insight into the structure of a system and its conformance to stakeholder concerns.

As a system architect, you can use the template suggested in the sidebar to document each major decision. By doing this, you provide a rationale for your work and

establish an historical record that can be useful when design modifications must be made

ARCHITECTURAL STYLES

When a builder uses the phrase "center hall colonial" to describe a house, most people familiar with houses in the United States will be able to conjure a general image of what the house will look like and what the floor plan is likely to be. The builder has used an *architectural style* as a descriptive mechanism to differentiate the house from other styles (e.g., A-frame, raised ranch, Cape Cod). But more important, the architectural style is also a template for construction. Further details of the house must be defined, its final dimensions must be specified, customized features may be added, building materials are to be determined, but the style—a "center hall colonial"—guides the builder in his work.

The software that is built for computer-based systems also exhibits one of many architectural styles. Each style describes a system category that encompasses (1) a set of components (e.g., a database, computational modules) that perform a function required by a system; (2) a set of connectors that enable "communication, coordination and cooperation" among components; (3) constraints that define how components can be integrated to form the system; and (4) semantic models that enable a designer to understand the overall properties of a system by analyzing the known properties of its constituent parts [Bas03].

An architectural style is a transformation that is imposed on the design of an entire system. The intent is to establish a structure for all components of the system.

In the case where an existing architecture is to be reengineered (Chapter 29), the imposition of an architectural style will result in fundamental changes to the structure of the software including a reassignment of the functionality of components [Bos00].

An architectural pattern, like an architectural style, imposes a transformation on the design of an architecture. However, a pattern differs from a style in a number of fundamental ways: (1) the scope of a pattern is less broad, focusing on one aspect of the architecture rather than the architecture in its entirety; (2) a pattern imposes a rule on the architecture, describing how the software will handle some aspect of its functionality at the infrastructure level (e.g., concurrency) [Bos00]; (3) architectural patterns (Section 9.4) tend to address specific behavioral issues within the context of the architecture (e.g., how real-time applications handle synchronization or interrupts). Patterns can be used in conjunction with an architectural style to shape the overall structure of a system. In Section 9.3.1, I consider commonly used architectural styles and patterns for software.

A Brief Taxonomy of Architectural Styles

Although millions of computer-based systems have been created over the past 60 years, the vast majority can be categorized into one of a relatively small number of architectural styles:

Data-centered architectures. A data store (e.g., a file or database) resides at the center of this architecture and is accessed frequently by other components that update, add, delete, or otherwise modify data within the store. Figure 9.1 illustrates a typical data-centered style. Client software accesses a central repository. In some cases the data repository is passive. That is, client software accesses the data independent of any changes to the data or the actions of other client software. A variation on this approach transforms the repository into a "blackboard"

FIGURE 9.1

Data-centered architecture

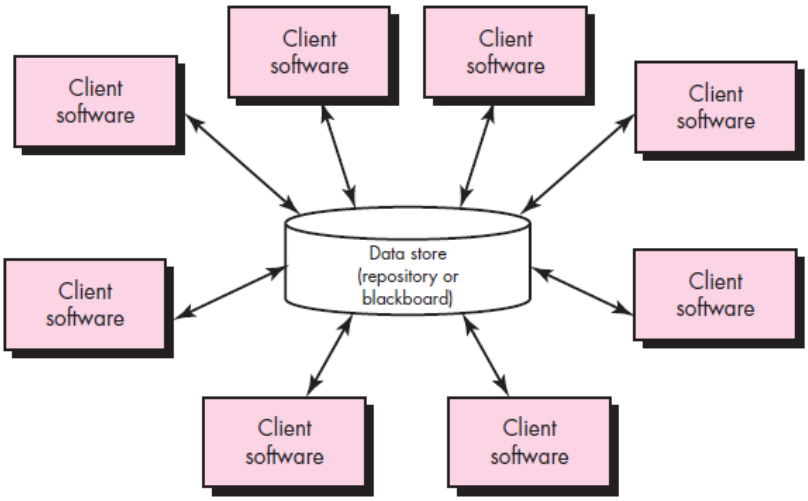

that sends notifications to client software when data of interest to the client changes.

Data-centered architectures promote *integrability* [Bas03]. That is, existing components can be changed and new client components added to the architecture without concern about other clients (because the client components operate independently). In addition, data can be passed among clients using the blackboard mechanism (i.e., the blackboard component serves to coordinate the transfer of information between clients). Client components independently execute processes.

Data-flow architectures. This architecture is applied when input data are to be transformed through a series of computational or manipulative components into output data. A pipe-and-filter pattern (Figure 9.2) has a set of components, called *filters*, connected by *pipes* that transmit data from one component to the next. Each filter works independently of those components upstream and downstream, is designed to expect data input of a certain form, and produces data output (to the next filter) of a specified form. However, the filter does not require knowledge of the workings of its neighboring filters.

If the data flow degenerates into a single line of transforms, it is termed batch sequential. This structure accepts a batch of data and then applies a series of sequential components (filters) to transform it.

Call and return architectures. This architectural style enables you to achieve a program structure that is relatively easy to modify and scale. A number of substyles [Bas03] exist within this category:

- *Main program/subprogram architectures.* This classic program structure decomposes function into a control hierarchy where a "main" program

FIGURE 9.2

Data-flow architecture

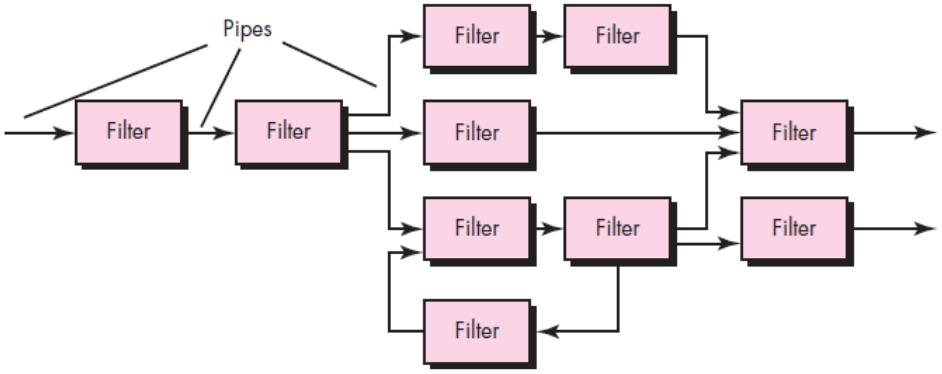

Pipes and filters

FIGURE 9.3 Main program/subprogram architecture

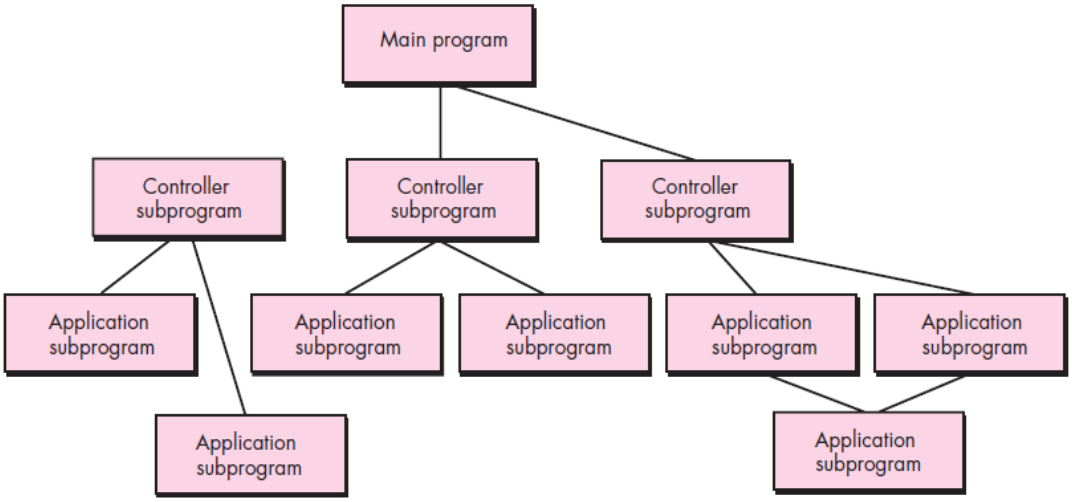

invokes a number of program components that in turn may invoke still other components. Figure 9.3 illustrates an architecture of this type.

- *Remote procedure call architectures.* The components of a main program/subprogram architecture are distributed across multiple computers on a network.

Object-oriented architectures. The components of a system encapsulate data and the operations that must be applied to manipulate the data. Communication and coordination between components are accomplished via message passing.

FIGURE 9.4
Layered architecture

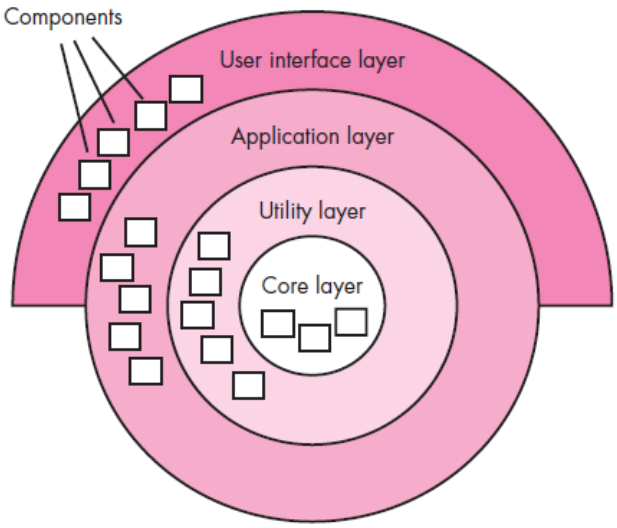

Layered architectures. The basic structure of a layered architecture is illustrated in Figure 9.4. A number of different layers are defined, each accomplishing operations that progressively become closer to the machine instruction set. At the outer layer, components service user interface operations. At the inner layer, components perform operating system interfacing. Intermediate layers provide utility services and application software functions.

These architectural styles are only a small subset of those available.[2] Once requirements engineering uncovers the characteristics and constraints of the system to be built, the architectural style and/or combination of patterns that best fits those characteristics and constraints can be chosen. In many cases, more than one pattern might be appropriate and alternative architectural styles can be

designed and evaluated. For example, a layered style (appropriate for most systems) can be combined with a data-centered architecture in many database applications.

ARCHITECTURAL DESIGN

As architectural design begins, the software to be developed must be put into context—that is, the design should define the external entities (other systems, devices, people) that the software interacts with and the nature of the interaction. This information can generally be acquired from the requirements model and all other information gathered during requirements engineering. Once context is modeled and all external software interfaces have been described, you can identify a set of architectural archetypes. An *archetype* is an abstraction (similar to a class) that represents one element of system behavior. The set of archetypes provides a collection of abstractions that must be modeled architecturally if the system is to be constructed, but the archetypes themselves do not provide enough implementation detail. Therefore, the designer specifies the structure of the system by defining and refining software components that implement each archetype. This process continues iteratively until a complete architectural structure has been derived. In the sections that follow we examine each of these architectural design tasks in a bit more detail.

9.4.1 Representing the System in Context

At the architectural design level, a software architect uses an *architectural context diagram* (ACD) to model the manner in which software interacts with entities external to its boundaries. The generic structure of the architectural context diagram is illustrated in Figure 9.5.

Referring to the figure, systems that interoperate with the *target system* (the system for which an architectural design is to be developed) are represented as

- *Superordinate systems*—those systems that use the target system as part of some higher-level processing scheme.
- *Subordinate systems*—those systems that are used by the target system and provide data or processing that are necessary to complete target system functionality.
- *Peer-level systems*—those systems that interact on a peer-to-peer basis (i.e., information is either produced or consumed by the peers and the target system.
- *Actors*—entities (people, devices) that interact with the target system by producing or consuming information that is necessary for requisite processing.

Each of these external entities communicates with the target system through an interface (the small shaded rectangles).

To illustrate the use of the ACD, consider the home security function of the *SafeHome* product. The overall *SafeHome* product controller and the Internet-based system are both superordinate to the security function and are shown above the

FIGURE 9.5

Architectural context diagram

Source: Adapted from [Bos00].

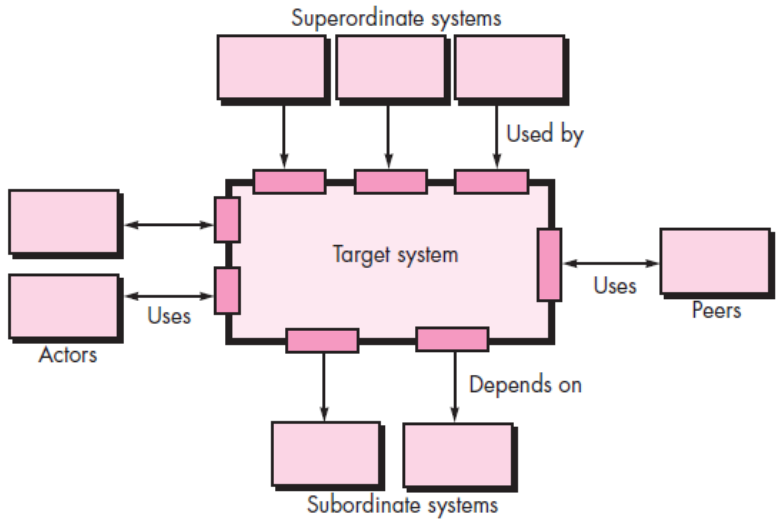

FIGURE 9.6

Architectural context diagram for the *SafeHome* security function

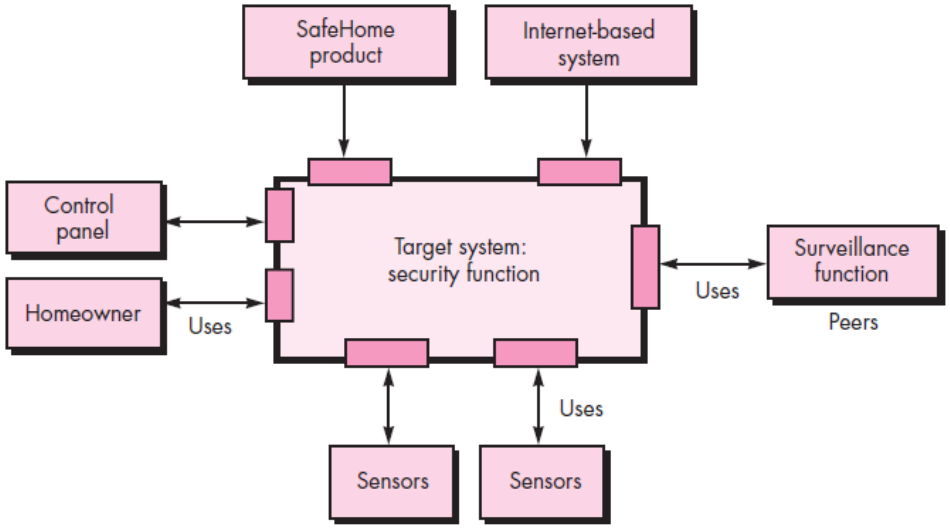

function in Figure 9.6. The surveillance function is a *peer system* and uses (is used by) the home security function in later versions of the product. The homeowner and control panels are actors that are both producers and consumers of information used/produced by the security software. Finally, sensors are used by the security software and are shown as subordinate to it.

As part of the architectural design, the details of each interface shown in Figure 9.6 would have to be specified. All data that flow into and out of the target system must be identified at this stage.

9.4.2 Defining Archetypes

An *archetype* is a class or pattern that represents a core abstraction that is critical to the design of an architecture for the target system. In general, a relatively small set of archetypes is required to design even relatively complex systems. The target system architecture is composed of these archetypes, which represent stable elements of the architecture but may be instantiated many different ways based on the behavior of the system.

In many cases, archetypes can be derived by examining the analysis classes defined as part of the requirements model. Continuing the discussion of the *SafeHome*

home security function, you might define the following archetypes:

- **Node.** Represents a cohesive collection of input and output elements of the home security function. For example a node might be comprised of (1) various sensors and (2) a variety of alarm (output) indicators.
- **Detector.** An abstraction that encompasses all sensing equipment that feeds information into the target system.

FIGURE 9.7

UML relationships for *SafeHome* security function archetypes

Source: Adapted from [Bos00].

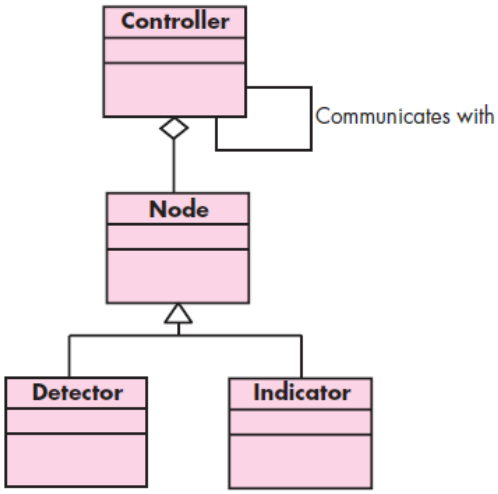

Indicator. An abstraction that represents all mechanisms (e.g., alarm siren, flashing lights, bell) for indicating that an alarm condition is occurring.

- **Controller.** An abstraction that depicts the mechanism that allows the arming or disarming of a node. If controllers reside on a network, they have the ability to communicate with one another.

Each of these archetypes is depicted using UML notation as shown in Figure 9.7. Recall that the archetypes form the basis for the architecture but are abstractions that must be further refined as architectural design proceeds. For example, **Detector** might be refined into a class hierarchy of sensors.

9.4.3 Refining the Architecture into Components

As the software architecture is refined into components, the structure of the system begins to emerge. But how are these components chosen? In order to answer this question, you begin with the classes that were described as part of the requirements model.[4] These analysis classes represent entities within the application (business) domain that must be addressed within the software architecture. Hence, the application domain is one source for the derivation and refinement of components. Another source is the infrastructure domain. The architecture must accommodate many infrastructure components that enable application components but have no business connection to the application domain. For example, memory management components, communication components, database components, and task management components are often integrated into the software architecture.

The interfaces depicted in the architecture context diagram (Section 9.4.1) imply one or more specialized components that process the data that flows across the interface. In some cases (e.g., a graphical user interface), a complete subsystem architecture with many components must be designed.

Continuing the *SafeHome* home security function example, you might define the set of top-level components that address the following functionality:

- *External communication management*—coordinates communication of the security function with external entities such as other Internet-based systems and external alarm notification.
- *Control panel processing*—manages all control panel functionality.
- *Detector management*—coordinates access to all detectors attached to the system.
- *Alarm processing*—verifies and acts on all alarm conditions.

Each of these top-level components would have to be elaborated iteratively and then positioned within the overall *SafeHome* architecture. Design classes (with appropriate attributes and operations) would be defined for each. It is important to note, however, that the design details of all attributes and operations would not be specified until component-level design (Chapter 10).

The overall architectural structure (represented as a UML component diagram) is illustrated in Figure 9.8. Transactions are acquired by *external communication management* as they move in from components that process the *SafeHome* GUI and the

FIGURE 9.8 Overall architectural structure for *SafeHome* with top-level components

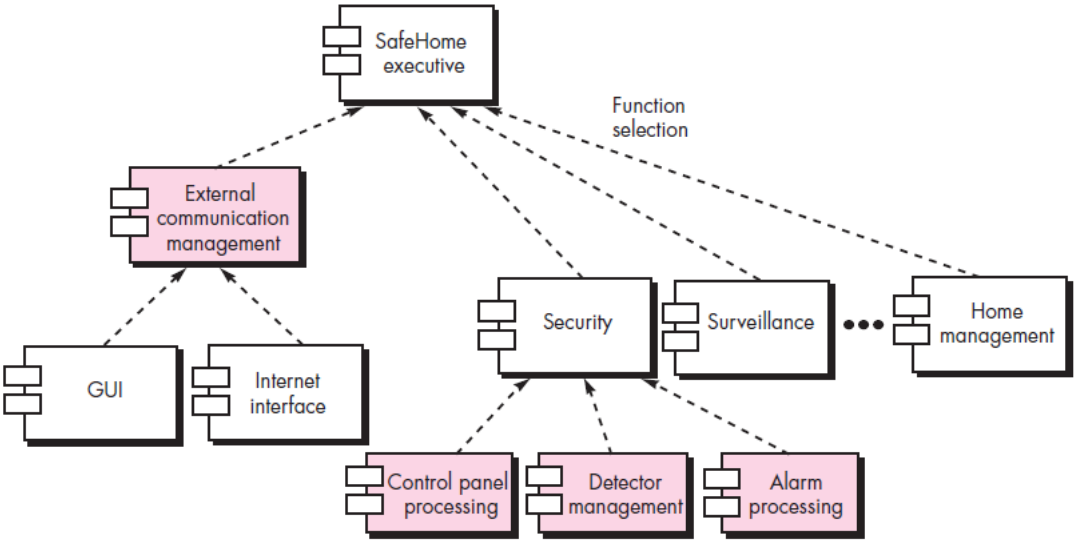

Internet interface. This information is managed by a *SafeHome* executive component that selects the appropriate product function (in this case security). The *control panel processing* component interacts with the homeowner to arm/disarm the security function. The *detector management* component polls sensors to detect an alarm condition, and the *alarm processing* component produces output when an alarm is detected.

Designing traditional components

The foundations of component-level design for traditional software components[7] were formed in the early 1960s and were solidified with the work of Edsger Dijkstra and his colleagues ([Boh66], [Dij65], [Dij76b]). In the late 1960s, Dijkstra and others proposed the use of a set of constrained logical constructs from which any program could be formed. The constructs emphasized "maintenance of functional domain." That is, each construct had a predictable logical structure and was entered at the top and exited at the bottom, enabling a reader to follow procedural flow more easily.

The constructs are sequence, condition, and repetition. *Sequence* implements processing steps that are essential in the specification of any algorithm. *Condition* provides the facility for selected processing based on some logical occurrence, and *repetition* allows for looping. These three constructs are fundamental to *structured programming*—an important component-level design technique.

The structured constructs were proposed to limit the procedural design of software to a small number of predictable logical structures. Complexity metrics (Chapter 23) indicate that the use of the structured constructs reduces program complexity and thereby enhances readability, testability, and maintainability. The use of a limited number of logical constructs also contributes to a human understanding process that psychologists call *chunking*. To understand this process, consider the way in which you are reading this page. You do not read individual letters but rather recognize patterns or chunks of letters that form words or phrases. The structured

constructs are logical chunks that allow a reader to recognize procedural elements of a module, rather than reading the design or code line by line. Understanding is enhanced when readily recognizable logical patterns are encountered.

Any program, regardless of application area or technical complexity, can be designed and implemented using only the three structured constructs. It should be noted, however, that dogmatic use of only these constructs can sometimes cause practical difficulties. Section 10.5.1 considers this issue in further detail.

10.5.1 Graphical Design Notation

”A picture is worth a thousand words,” but it’s rather important to know which picture and which 1000 words. There is no question that graphical tools, such as the UML activity diagram or the flowchart, provide useful pictorial patterns that readily depict procedural detail. However, if graphical tools are misused, the wrong picture may lead to the wrong software.

The activity diagram allows you to represent sequence, condition, and repetition—all elements of structured programming—and is a descendent of an earlier pictorial design representation (still used widely) called a *flowchart.* A flowchart, like an activity diagram, is quite simple pictorially. A box is used to indicate a processing step. A diamond represents a logical condition, and arrows show the flow of control. Figure 10.10 illustrates three structured constructs. The *sequence* is

FIGURE 10.10

Flowchart constructs

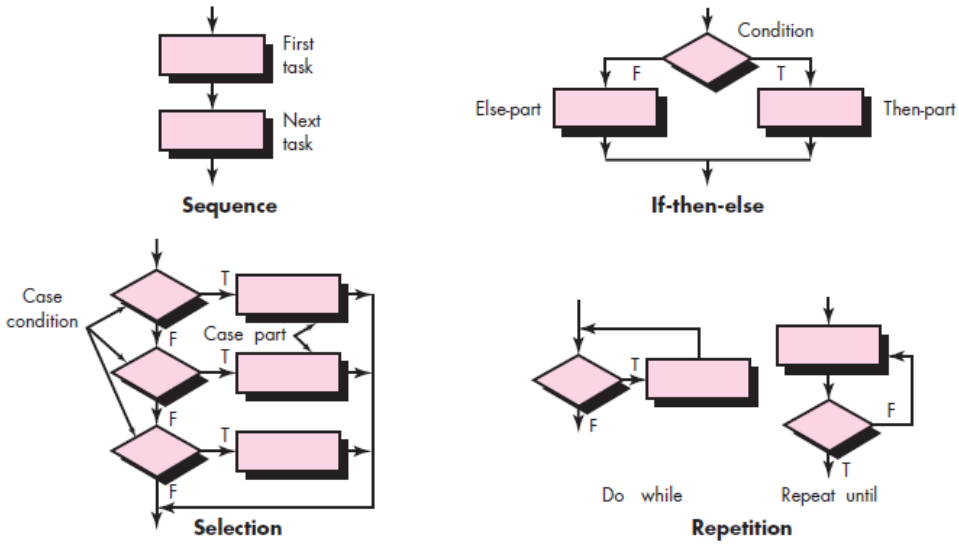

represented as two processing boxes connected by a line (arrow) of control.

Condition, also called *if-then-else,* is depicted as a decision diamond that, if true, causes *then-part* processing to occur, and if false, invokes *else-part* processing.

Repetition is represented using two slightly different forms. The *do while* tests a condition and executes a loop task repetitively as long as the condition holds true. A *repeat until* executes the loop task first and then tests a condition and repeats the task until the condition fails. The *selection* (or *select-case*) construct shown in the figure is actually an extension of the *if-then-else.* A parameter is tested by successive decisions until a true condition occurs and a *case part* processing path is executed.

In general, the dogmatic use of only the structured constructs can introduce inefficiency when an escape from a set of nested loops or nested conditions is required.

More important, additional complication of all logical tests along the path of escape can cloud software control flow, increase the possibility of error, and have a negative impact on readability and maintainability. What can you do?

You’re left with two options: (1) The procedural representation is redesigned so that the “escape branch” is not required at a nested location in the flow of control or (2) the structured constructs are violated in a controlled manner; that is, a constrained branch out of the nested flow is designed. Option 1 is obviously the ideal approach, but option

10.5.2 Tabular Design Notation

In many software applications, a module may be required to evaluate a complex combination of conditions and select appropriate actions based on these conditions.

Decision tables [Hur83] provide a notation that translates actions and conditions (described in a processing narrative or a use case) into a tabular form. The table is difficult to misinterpret and may even be used as a machine-readable input to a table-driven algorithm.

Decision table organization is illustrated in Figure 10.11. Referring to the figure, the table is divided into four sections. The upper left-hand quadrant contains a list of all conditions. The lower left-hand quadrant contains a list of all actions that are possible based on combinations of conditions. The right-hand quadrants form a matrix that indicates condition combinations and the corresponding actions that will occur for a specific combination. Therefore, each column of the matrix may be interpreted as a *processing rule*. The following steps are applied to develop a decision table:

1. List all actions that can be associated with a specific procedure (or component).
2. List all conditions (or decisions made) during execution of the procedure.
3. Associate specific sets of conditions with specific actions, eliminating impossible combinations of conditions; alternatively, develop every possible permutation of conditions.
4. Define rules by indicating what actions occur for a set of conditions.

FIGURE 10.11

Decision table nomenclature

	Rules					
Conditions	**1**	**2**	**3**	**4**	**5**	**6**
Regular customer	T	T				
Silver customer			T	T		
Gold customer					T	T
Special discount	F	T	F	T	F	T
Actions						
No discount	✓					
Apply 8 percent discount			✓	✓		
Apply 15 percent discount					✓	✓
Apply additional *x* percent discount		✓		✓		✓

To illustrate the use of a decision table, consider the following excerpt from an informal use case that has just been proposed for the print shop system:

Three types of customers are defined: a regular customer, a silver customer, and a gold customer (these types are assigned by the amount of business the customer does with the print shop over a 12 month period). A regular customer receives normal print rates and delivery. A silver customer gets an 8 percent discount on all quotes and is placed ahead of all regular customers in the job queue. A gold customer gets a 15 percent reduction in quoted prices and is placed ahead of both regular and silver customers in the job queue. A special discount of *x* percent in addition to other discounts can be applied to any customer's quote at the discretion of management.

Figure 10.11 illustrates a decision table representation of the preceding informal use case. Each of the six rules indicates one of six viable conditions. As a general rule, the decision table can be used effectively to supplement other procedural design notation.

10.5.3 Program Design Language

Program design language (PDL), also called *structured English* or *pseudocode*, incorporates the logical structure of a programming language with the free-form expressive ability of a natural language (e.g., English). Narrative text (e.g., English) is embedded within a programming language-like syntax. Automated tools (e.g., [Cai03]) can be used to enhance the application of PDL.

A basic PDL syntax should include constructs for component definition, interface description, data declaration, block structuring, condition constructs, repetition constructs, and input-output (I/O) constructs. It should be noted that PDL can be extended to include keywords for multitasking and/or concurrent processing, interrupt handling, interprocess synchronization, and many other features. The application design for which PDL is to be used should dictate the final form for the design language. The format and semantics for some of these PDL constructs are presented in the example that follows. To illustrate the use of PDL, consider a procedural design for the *SafeHome* security

function discussed in earlier chapters. The system monitors alarms for fire, smoke, burglar, water, and temperature (e.g., the heating system fails while the homeowner is away during winter) and produces an alarm bell and calls a monitoring service, generating a voice-synthesized message.

Recall that PDL is *not* a programming language. You can adapt as required without worry about syntax errors. However, the design for the monitoring software would have to be reviewed (do you see any problems?) and further refined before code could be written. The following PDL[8] provides an elaboration of the procedural design for an early version of an alarm management component.

```
component alarmManagement;
The intent of this component is to manage control panel switches and input from sensors by
type and to act on any alarm condition that is encountered.
    set default values for systemStatus (returned value), all data items
    initialize all system ports and reset all hardware
    check controlPanelSwitches (cps)
        if cps = "test" then invoke alarm set to "on"
        if cps = "alarmOff" then invoke alarm set to "off"
        if cps = "newBoundingValue" then invoke keyboardInput
        if cps = "burglarAlarmOff" invoke deactivateAlarm;
        •
        •
        •
        default for cps = none
    reset all signalValues and switches
    do for all sensors
            invoke checkSensor procedure returning signalValue
            if signalValue > bound [alarmType]
                then phoneMessage = message [alarmType]
                    set alarmBell to "on" for alarmTimeSeconds
                    set system status = "alarmCondition"
                    parbegin
                        invoke alarm procedure with "on", alarmTimeSeconds;
                        invoke phone procedure set to alarmType, phoneNumber
                    endpar
                else skip
            endif
        enddofor
    end alarmManagement
```

Note that the designer for the **alarmManagement** component has used the construct parbegin … parend that specifies a parallel block. All tasks specified within the

parbegin block are executed in parallel. In this case, implementation details are not considered.

User interface analysis and design

The overall process for analyzing and designing a user interface begins with the creation of different models of system function (as perceived from the outside). You begin by delineating the human- and computer-oriented tasks that are required to achieve system function and then considering the design issues that apply to all interface designs. Tools are used to prototype and ultimately implement the design model, and the result is evaluated by end users for quality.

11.2.1 Interface Analysis and Design Models

Four different models come into play when a user interface is to be analyzed and designed. A human engineer (or the software engineer) establishes a *user model*, the software engineer creates a *design model*, the end user develops a mental image that is often called the user's *mental model* or the *system perception*, and the implementers of the system create an *implementation model*. Unfortunately, each of these models may differ significantly. Your role, as an interface designer, is to reconcile these differences and derive a consistent representation of the interface.

The user model establishes the profile of end users of the system. In his introductory column on "user-centric design," Jeff Patton [Pat07] notes:

> The truth is, designers and developers—myself included—often think about users. However, in the absence of a strong mental model of specific users, we self-substitute. Selfsubstitution isn't user centric—it's self-centric.

To build an effective user interface, "all design should begin with an understanding of the intended users, including profiles of their age, gender, physical abilities, education, cultural or ethnic background, motivation, goals and personality" [Shn04]. In addition, users can be categorized as:

Novices. No syntactic knowledge[1] of the system and little semantic knowledge[2] of the application or computer usage in general.

Knowledgeable, intermittent users. Reasonable semantic knowledge of the application but relatively low recall of syntactic information necessary to use the interface.

Knowledgeable, frequent users. Good semantic and syntactic knowledge that often leads to the "power-user syndrome"; that is, individuals who look for shortcuts and abbreviated modes of interaction.

The user's *mental model* (system perception) is the image of the system that end users carry in their heads. For example, if the user of a particular word processor were asked to describe its operation, the system perception would guide the response. The accuracy of the description will depend upon the user's profile (e.g., novices would provide a sketchy response at best) and overall familiarity with software in the application domain. A user who understands word processors fully but has worked with the specific word processor only once might actually be able to provide a more complete description of its function than the novice who has spent weeks trying to learn the system.

The *implementation model* combines the outward manifestation of the computerbased system (the look and feel of the interface), coupled with all supporting information (books, manuals, videotapes, help files) that describes interface syntax and semantics. When the implementation model and the user's mental model are coincident, users generally feel comfortable with the software and use it effectively. To accomplish this "melding" of the models, the design model must have been developed to accommodate the information contained in the user model, and the implementation model must accurately reflect syntactic and semantic information about the interface.

The models described in this section are "abstractions of what the user is doing or thinks he is doing or what somebody else thinks he ought to be doing when he uses an interactive system" [Mon84]. In essence, these models enable the interface designer to satisfy a key element of the most important principle of user interface design: "Know the user, know the tasks."

11.2.2 The Process

The analysis and design process for user interfaces is iterative and can be represented using a spiral model similar to the one discussed in Chapter 2. Referring to Figure 11.1, the user interface analysis and design process begins at the interior of the spiral and encompasses four distinct framework activities [Man97]: (1) interface analysis and modeling, (2) interface design, (3) interface construction, and (4) interface validation. The spiral shown in Figure 11.1 implies that each of these tasks will

occur more than once, with each pass around the spiral representing additional elaboration of requirements and the resultant design. In most cases, the construction activity involves prototyping—the only practical way to validate what has been designed.

Interface analysis focuses on the profile of the users who will interact with the system. Skill level, business understanding, and general receptiveness to the new system are recorded; and different user categories are defined. For each user category, requirements are elicited. In essence, you work to understand the system perception (Section 11.2.1) for each class of users.

Once general requirements have been defined, a more detailed *task analysis* is conducted. Those tasks that the user performs to accomplish the goals of the system

FIGURE 11.1

The user interface design process

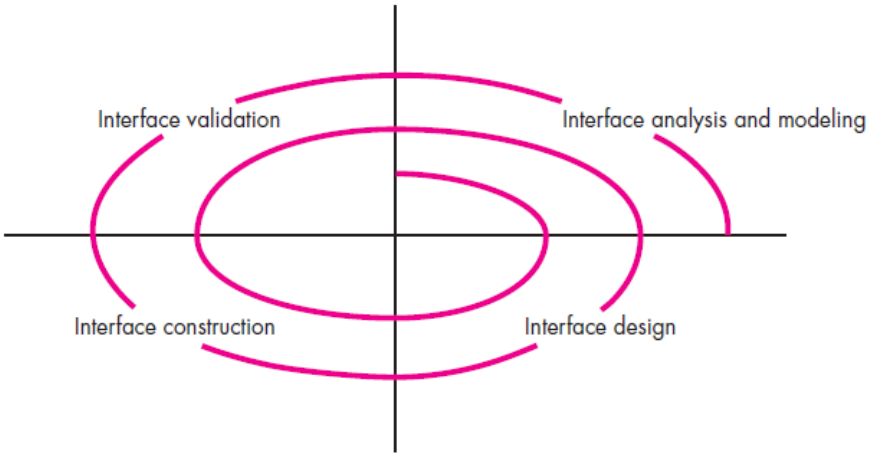

are identified, described, and elaborated (over a number of iterative passes through the spiral). Task analysis is discussed in more detail in Section 11.3. Finally, analysis of the user environment focuses on the physical work environment. Among the questions to be asked are

- Where will the interface be located physically?
- Will the user be sitting, standing, or performing other tasks unrelated to the interface?
- Does the interface hardware accommodate space, light, or noise constraints?
- Are there special human factors considerations driven by environmental factors?

The information gathered as part of the analysis action is used to create an analysis model for the interface. Using this model as a basis, the design action commences. The goal of *interface design* is to define a set of interface objects and actions (and their screen representations) that enable a user to perform all defined tasks in a manner that meets every usability goal defined for the system. Interface design is discussed in more detail in Section 11.4.

Interface construction normally begins with the creation of a prototype that enables usage scenarios to be evaluated. As the iterative design process continues, a user interface tool kit (Section 11.5) may be used to complete the construction of the interface.

Interface validation focuses on (1) the ability of the interface to implement every user task correctly, to accommodate all task variations, and to achieve all general user requirements; (2) the degree to which the interface is easy to use and easy to learn, and (3) the users' acceptance of the interface as a useful tool in their work.

As I have already noted, the activities described in this section occur iteratively. Therefore, there is no need to attempt to specify every detail (for the analysis or design model) on the first pass. Subsequent passes through the process elaborate task detail, design information, and the operational features of the interface.

INTERFACE ANALYSIS[3]

A key tenet of all software engineering process models is this: *understand the problem before you attempt to design a solution.* In the case of user interface design, understanding

the problem means understanding (1) the people (end users) who will interact with the system through the interface, (2) the tasks that end users must perform to do their work, (3) the content that is presented as part of the interface, and (4) the environment in which these tasks will be conducted. In the sections that follow, I examine each of these elements of interface analysis with the intent of establishing a solid foundation for the design tasks that follow.

11.3.1 User Analysis

The phrase "user interface" is probably all the justification needed to spend some time understanding the user before worrying about technical matters. Earlier I noted that each user has a mental image of the software that may be different from the mental image developed by other users. In addition, the user's mental image may be vastly different from the software engineer's design model. The only way that you can get the mental image and the design model to converge is to work to understand the users themselves as well as how these people will use the system. Information from a broad array of sources can be used to accomplish this:

User Interviews. The most direct approach, members of the software team meet with end users to better understand their needs, motivations, work culture, and a myriad of other issues. This can be accomplished in one-on-one meetings or through focus groups.

Sales input. Sales people meet with users on a regular basis and can gather information that will help the software team to categorize users and better understand their requirements.

Marketing input. Market analysis can be invaluable in the definition of market segments and an understanding of how each segment might use the software in subtly different ways.

Support input. Support staff talks with users on a daily basis. They are the most likely source of information on what works and what doesn't, what users like and what they dislike, what features generate questions and what features are easy to use.

The following set of questions (adapted from [Hac98]) will help you to better understand the users of a system:

- Are users trained professionals, technicians, clerical, or manufacturing workers?
- What level of formal education does the average user have?
- Are the users capable of learning from written materials or have they expressed a desire for classroom training?
- Are users expert typists or keyboard phobic?
- What is the age range of the user community?
- Will the users be represented predominately by one gender?
- How are users compensated for the work they perform? Do users work normal office hours or do they work until the job is done?
- Is the software to be an integral part of the work users do or will it be used only occasionally?
- What is the primary spoken language among users?
- What are the consequences if a user makes a mistake using the system?
- Are users experts in the subject matter that is addressed by the system?
- Do users want to know about the technology that sits behind the interface?

Once these questions are answered, you'll know who the end users are, what is likely to motivate and please them, how they can be grouped into different user classes or profiles, what their mental models of the system are, and how the user interface must be characterized to meet their needs.

11.3.2 Task Analysis and Modeling

The goal of task analysis is to answer the following questions:

- What work will the user perform in specific circumstances?
- What tasks and subtasks will be performed as the user does the work?
- What specific problem domain objects will the user manipulate as work is performed?
- What is the sequence of work tasks—the workflow?
- What is the hierarchy of tasks?

To answer these questions, you must draw upon techniques that I have discussed earlier in this book, but in this instance, these techniques are applied to the user interface.

Use cases. In earlier chapters you learned that the use case describes the manner

in which an actor (in the context of user interface design, an actor is always a person) interacts with a system. When used as part of task analysis, the use case is developed to show how an end user performs some specific work-related task. In most instances, the use case is written in an informal style (a simple paragraph) in the first-person. For example, assume that a small software company wants to build a computer-aided design system explicitly for interior designers. To get a better understanding of how they do their work, actual interior designers are asked to describe a specific design function. When asked: "How do you decide where to put furniture in a room?" an interior designer writes the following informal use case:

I begin by sketching the floor plan of the room, the dimensions and the location of windows and doors. I'm very concerned about light as it enters the room, about the view out of the windows (if it's beautiful, I want to draw attention to it), about the running length of an unobstructed wall, about the flow of movement through the room. I then look at the list of furniture my customer and I have chosen—tables, chairs, sofa, cabinets, the list of accents—lamps, rugs, paintings, sculpture, plants, smaller pieces, and my notes on any desires my customer has for placement. I then draw each item from my lists using a template that is scaled to the floor plan. I label each item I draw and use pencil because I always move things. I consider a number of alternative placements and decide on the one I like best. Then, I draw a rendering (a 3-D picture) of the room to give my customer a feel for what it'll look like.

This use case provides a basic description of one important work task for the computer-aided design system. From it, you can extract tasks, objects, and the overall flow of the interaction. In addition, other features of the system that would please the interior designer might also be conceived. For example, a digital photo could be taken looking out each window in a room. When the room is rendered, the actual outside view could be represented through each window. **Task elaboration.** In Chapter 8, I discussed stepwise elaboration (also called functional decomposition or stepwise refinement) as a mechanism for refining the processing tasks that are required for software to accomplish some desired function.

Task analysis for interface design uses an elaborative approach to assist in understanding the human activities the user interface must accommodate.

Task analysis can be applied in two ways. As I have already noted, an interactive, computer-based system is often used to replace a manual or semimanual activity. To understand the tasks that must be performed to accomplish the goal of the activity, you must understand the tasks that people currently perform (when using a manual approach) and then map these into a similar (but not necessarily identical) set of tasks that are implemented in the context of the user interface. Alternatively, you can study an existing specification for a computer-based solution and derive a set of user tasks that will accommodate the user model, the design model, and the system perception.

Object elaboration. Rather than focusing on the tasks that a user must perform, you can examine the use case and other information obtained from the user and extract the physical objects that are used by the interior designer. These objects can be categorized into classes. Attributes of each class are defined, and an evaluation of the actions applied to each object provide a list of operations. For example, the furniture template might translate into a class called **Furniture** with attributes that might include size, shape, location, and others. The interior designer would *select* the object from the **Furniture** class, *move* it to a position on the floor plan (another object in this context), *draw* the furniture outline, and so forth. The tasks *select*, *move*, and *draw* are operations. The user interface analysis model would not provide a literal implementation for each of these operations. However, as the design is elaborated, the details of each operation are defined.

Workflow analysis. When a number of different users, each playing different roles, makes use of a user interface, it is sometimes necessary to go beyond task analysis and object elaboration and apply *workflow analysis.* This technique allows you to understand how a work process is completed when several people (and roles) are involved. Consider a company that intends to fully automate the process of prescribing and delivering prescription drugs. The entire process[5] will revolve around a Web-based application that is accessible by physicians (or their assistants), pharmacists, and patients. Workflow can be represented effectively with a UML swimlane diagram (a variation on the activity diagram).

Hierarchical representation. A process of elaboration occurs as you begin to analyze the interface. Once workflow has been established, a task hierarchy can be defined for each user type. The hierarchy is derived by a stepwise elaboration of each task identified for the user. For example, consider the following user task and subtask hierarchy.

11.3.3 Analysis of Display Content

The user tasks identified in Section 11.3.2 lead to the presentation of a variety of different types of content. For modern applications, display content can range from

character-based reports (e.g., a spreadsheet), graphical displays (e.g., a histogram, a 3-D model, a picture of a person), or specialized information (e.g., audio or video files). The analysis modeling techniques discussed in Chapters 6 and 7 identify the output data objects that are produced by an application. These data objects may be (1) generated by components (unrelated to the interface) in other parts of an application, (2) acquired from data stored in a database that is accessible from the application, or (3) transmitted from systems external to the application in question.

11.3.4 Analysis of the Work Environment

Hackos and Redish [Hac98] discuss the importance of work environment analysis when they state:

> People do not perform their work in isolation. They are influenced by the activity around them, the physical characteristics of the workplace, the type of equipment they are using, and the work relationships they have with other people. If the products you design do not fit into the environment, they may be difficult or frustrating to use.

In some applications the user interface for a computer-based system is placed in a "user-friendly location" (e.g., proper lighting, good display height, easy keyboard access), but in others (e.g., a factory floor or an airplane cockpit), lighting may be suboptimal, noise may be a factor, a keyboard or mouse may not be an option, display placement may be less than ideal. The interface designer may be constrained by factors that mitigate against ease of use.

In addition to physical environmental factors, the workplace culture also comes into play. Will system interaction be measured in some manner (e.g., time per transaction or accuracy of a transaction)? Will two or more people have to share information before an input can be provided? How will support be provided to users of the system? These and many related questions should be answered before the interface design commences.

Procedural design