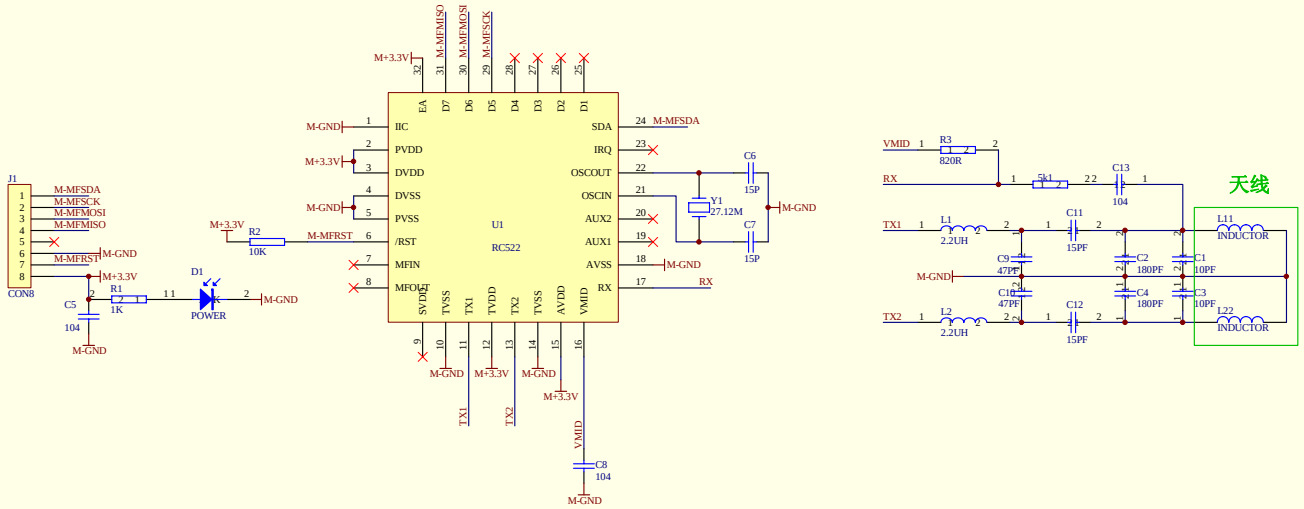

Title

SG-RC522射频模块原理图

Size	Number	Revision
B		

Date: 6-Jul-2012 Sheet of

File: D:\各种开发板资料\射频开发板资料(1)\sg-rc522\sg-rc522.ddb