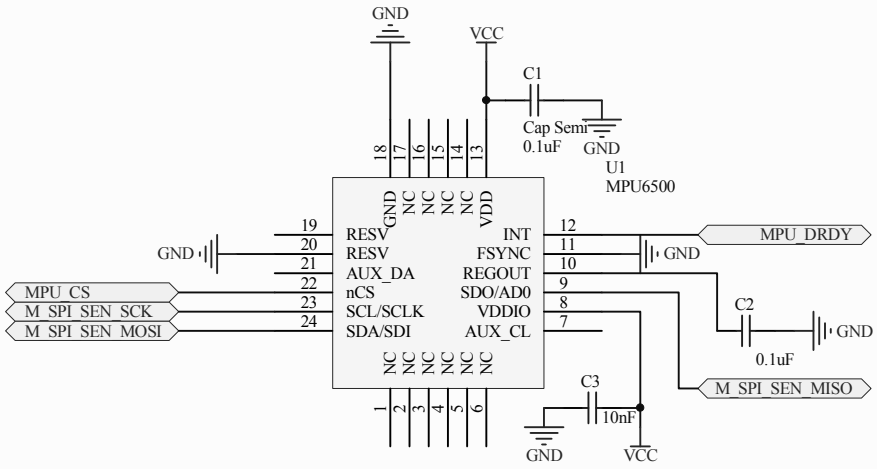

MPU6500

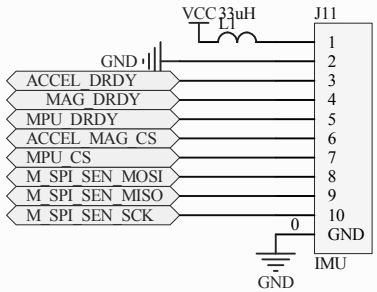

FPC

Title		
Size A4	Number	Revision
Date: 2016/5/7 星期六		Sheet of
File: E:\drone\upload\imu.SchDoc		Drawn By: