Adversarial Debiasing for Parameter Recovery

1 Proof that maximizing adversarial loss decreases bias when accuracy is held constant

Define $P = X(X'X)^{-1}X'$ as the n x n symmetric and idempotent projection matrix, and $\mathbb{I}$ as the n x n identity matrix. The adversary's loss function is:

$$\begin{aligned} L_a &= (\nu - P\nu)'(\nu - P\nu) \\ &= v'(\mathbb{I} - P)'(\mathbb{I} - P)\nu \\ &= v'(\mathbb{I} - P)\nu = \nu'\nu - \nu'P\nu \end{aligned} \tag{1}$$

by the properties of the projection matrix. Consider prediction errors at step t and $t+1$ of training: ν_t and ν_{t+1}, and suppose that their prediction accuracy is equivalent. Maximizing the adversarial loss implies that $L_a(\nu_{t+1}) > L_a(\nu_t)$. Therefore,

$$\nu'_{t+1}\nu_{t+1} - \nu'_{t+1}P\nu_{t+1} > \nu'_t\nu_t - \nu'_tP\nu_t \tag{2}$$

$$\nu'_{t+1}P\nu_{t+1} < \nu'_tP\nu_t$$

$$\nu'_{t+1}PP\nu_{t+1} < \nu'_tPP\nu_t \tag{3}$$

$$\nu'_{t+1}X(X'X)^{-1}X'X(X'X)^{-1}X'\nu_{t+1} < \nu'_tX(X'X)^{-1}X'X(X'X)^{-1}X'\nu_t$$

$$\gamma_{t+1}X'X\gamma_{t+1} < \gamma_tX'X\gamma_t$$

$$|\gamma_{t+1}| < |\gamma_t|. \tag{4}$$

Concluding the proof.

2 Debiasing with Control Variables and Instruments

Adding Control Variables

Assume we want to estimate β_1 in the regression

$$\widehat{Y}_i = \beta_1 x_1 + x_2\beta_2 + e_i \tag{5}$$

where x_1 is an n x 1 vector of the treatment variable, and x_2 is an n x k matrix of control variables. By the Frisch-Waugh-Lovell theorem, we can write $\widehat{\beta}_1$ as:

$$\widehat{\beta}_1 = (\tilde{X}_1'\tilde{X}_1)^{-1}\tilde{X}_1'\tilde{\widehat{Y}} \tag{6}$$

where $\tilde{X}_1$ are the residuals of the regression of X_1 on X_2, and $\tilde{\widehat{Y}}$ are the residuals of the regression of $\widehat{Y}$ on X_2. $\widehat{\beta}_1$ can thus be rewritten as follows:

$$\begin{aligned}\widehat{\beta}_1 &= (\tilde{X}_1'\tilde{X}_1)^{-1}\tilde{X}_1'(\mathbb{I} - X_2(X_2'X_2)^{-1}X_2')(Y+\nu) \\ &= (\tilde{X}_1'\tilde{X}_1)^{-1}\tilde{X}_1'(\mathbb{I} - X_2(X_2'X_2)^{-1}X_2')Y + \\ &\quad (\tilde{X}_1'\tilde{X}_1)^{-1}\tilde{X}_1'(\mathbb{I} - X_2(X_2'X_2)^{-1}X_2')\nu \\ &= (\tilde{X}_1'\tilde{X}_1)^{-1}\tilde{X}_1'\tilde{Y} + (\tilde{X}_1'\tilde{X}_1)^{-1}\tilde{X}_1'\tilde{\nu}\end{aligned} \tag{7}$$

where $\tilde{\nu}$ are the residuals of the regression of ν on X_2. The expectation of this estimate is

$$\mathbb{E}[\beta_1] = \beta_1 + \frac{\mathrm{Cov}(\tilde{X}_1, \tilde{\nu})}{\mathrm{Var}(\tilde{X}_1)}. \tag{8}$$

Intuitively this makes sense – if the residual variation in X_1 is correlated with the residual prediction error, after controlling for X_2 in both cases, our estimate will be biased. Thus following the same logic as above, we can make the adversary a linear regression of $\tilde{\nu}$ on $\tilde{X}_1$. The same logic applies for when adding additional covariates to the regression.

Instrumental Variables

A similar argument can be extended to the instrumental variables case with controls. Following the two-stage least squares estimation procedure, we first use covariates X_2 and instruments Z to predict X_1:

$$\widehat{X}_1^{IV} = C(C'C)^{-1}C'X_1 \tag{9}$$

where $C = [1, X_2, Z]$. Then, we regress the outcome against the predicted values of X_1 and the covariates X_2 and take the estimated coefficient for $\widehat{X}_1^{IV}$ in this second stage regression as our estimate of the true β_1. By the Frisch-Waugh-Lovell theorem, we have

$$\begin{aligned}\widehat{\beta_1}^{2SLS} &= (\tilde{\widehat{X}}_1{}'\tilde{\widehat{X}}_1)^{-1}\tilde{\widehat{X}}_1{}'\tilde{\widehat{Y}} \\ &= (\tilde{\widehat{X}}_1{}'\tilde{\widehat{X}}_1)^{-1}\tilde{\widehat{X}}_1{}'\tilde{Y} + (\tilde{\widehat{X}}_1{}'\tilde{\widehat{X}}_1)^{-1}\tilde{\widehat{X}}_1{}'\tilde{\nu}\end{aligned} \tag{10}$$

where $\tilde{\widehat{X_1}}$ are the residuals from regressing $\widehat{X}_1^{IV}$ on X_2, $\tilde{Y}$ are the residuals from regressing Y on X_2, and $\tilde{\nu}$ are the residuals from regressing ν on X_2.

In the case of a single instrument Z, this estimator of β_1 can be rewritten more simply following the indirect least-squares procedure. For this approach, we perform linear regressions for the models

$$\widehat{Y}_i = \gamma_0 + \gamma_1 w_i + \gamma_2' X_{2i} + w_i; \tag{11}$$

$$\widehat{X}_{1i} = \alpha_0 + \alpha_1 Z_i + \alpha_2' X_{2i} + u_i \tag{12}$$

This produces the following estimate of β_1, which coincides with $\widehat{\beta_1}^{2SLS}$ for this special case:

$$\begin{aligned} \widehat{\beta}_1^{ILS} = \frac{\widehat{\gamma_1}}{\widehat{\alpha_1}} &= \frac{(\tilde{Z}'\tilde{Z})^{-1}\tilde{Z}'\tilde{\widehat{Y}}}{(\tilde{Z}'\tilde{Z})^{-1}\tilde{Z}'\tilde{X}_1} = \frac{\mathrm{Cov}(\tilde{Z}, \tilde{\widehat{Y}})}{\mathrm{Cov}(\tilde{Z}, \tilde{X}_1)} \\ &= \frac{\mathrm{Cov}(\tilde{Z}, \tilde{Y})}{\mathrm{Cov}(\tilde{Z}, \tilde{X}_1)} + \frac{\mathrm{Cov}}{\mathrm{Cov}(\tilde{Z}, \tilde{X}_1)} \end{aligned} \tag{13}$$

In the above expressions for $\widehat{\beta_1}^{2SLS}$ and $\widehat{\beta}_1^{ILS}$, we see that the coefficient estimates are the sum of the coefficient estimate that we would obtain from performing these procedures given Y without measurement error - which is consistent for β_1 given IV assumptions - and an additional bias term involving the measurement error ν. To minimize this bias, we propose an adversary in the form of a regression of $\tilde{\nu}$ on $\tilde{Z}$ for the single instrument case, or $\tilde{\nu}$ on $\tilde{\hat{X}}_1$ more generally.

3 Adversarial Debiaser Algorithm

Algorithm 1 Adversarial Debiasing Algorithm

Require: Labeled data $\{(k_j, x_j, y_j)\}_{j=1}^N$; primary model $P(\cdot;\omega)$; adversary $A(\cdot;\gamma)$; loss functions L_p and L_a; learning rates $\eta_\omega,\ \eta_\gamma$; adversarial weight α; number of training iterations T.

Initialize primary model parameters ω.
Initialize adversary parameters γ.
for $t = 1, \ldots, T$ **do**
    Primary Model Forward Pass:
    For each sample j, compute $\widehat{Y}_j \leftarrow P(k_j;\omega)$.
    Compute prediction errors $\nu_j \leftarrow y_j - \widehat{Y}_j(\omega)$.
    Adversary Update (minimize L_a):
    $\gamma \leftarrow \gamma - \eta_\gamma \nabla_\gamma \big[L_a(x_j, \nu_j, \gamma)\big]$.
    Primary Model Update (minimize $L_p - \alpha\, L_a$):
    $\omega \leftarrow \omega - \eta_\omega \nabla_\omega \Big[L_p(\widehat{Y},\, y) - \alpha\, L_a(x_j, \nu_j, \gamma)\Big]$.
end for
    return Trained primary model parameters ω^*

4 Potential Sources of Bias

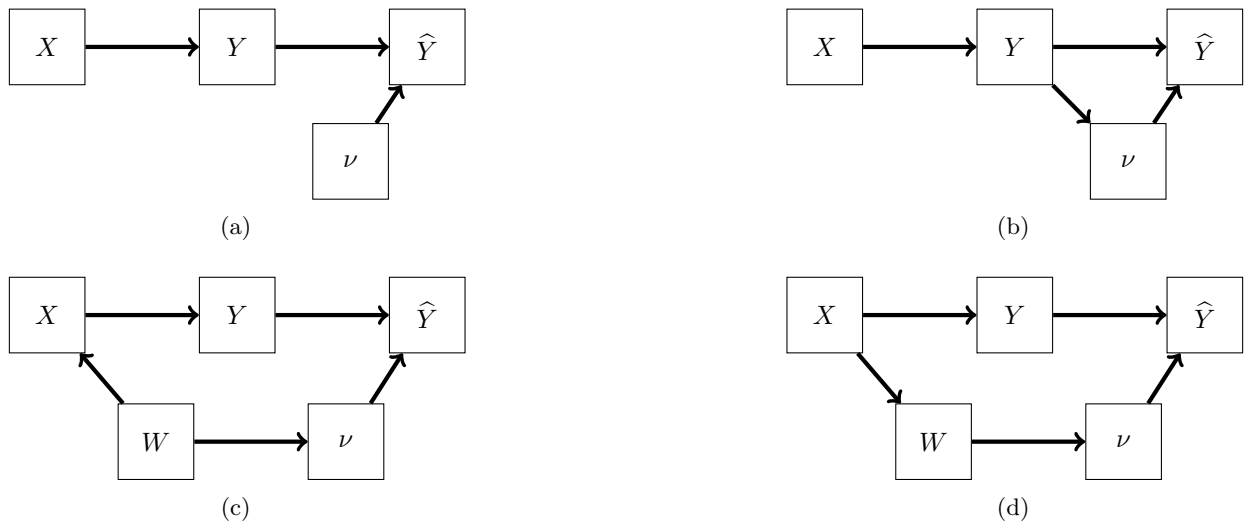

Figure 1: Four Directed-Acrylic-Graphs illustrating potential relationships between treatment (X), outcomes (Y), measurement error (ν), machine learning model predictions ($\widehat{Y}$), and unobserved variables (W). (a) is classical measurement error, (b) shows outcome-induced bias, (c) shows confounder-induced bias, and (d) shows treatment-induced bias.

5 Training and test details

All details of the model training and testing can be found in the code package, but we provide a quick overview here. For the baseline model we use a two layer neural network with 32 nodes in each layer, followed by a single final layer with a sigmoid activation function if the outcome is categorical or a linear activation if the outcome is continuous. For categorical outcomes we use a binary cross-entropy loss function and for continuous outcomes we use mean squared error. We apply batch normalization before the first layer. We allow the model to train for up to 50 epochs with an early stopping rule on improvement of the mae with a patience of 10. We use an adam optimizer and we set the number of cross-fit folds to 3.

For the adversarial models we use the same machine learning model described above with the addition of the adversarial loss component described in the paper. For the correlational adversary described in the paper we set the adversarial weight $\alpha = 1$

6 Computation Resources

Our main tests consisted of 100 runs of each algorithm at the following sample sizes of labeled observations out of 20,000 total observations: 300, 600, 900, 1200, 1500, 1800, 2100, 2400, 3000, 4000, 5000, 6000, 7000, 8000, 9000, and 10000. Each faint line in Figure 4 corresponds to one run where 300 points were sampled, then 300 more, progressively sampling up to 10,000 labeled observations. We estimated coefficients of interest for each debiasing method for each sample size and run.

This task was split over 20 job submissions, each containing 5 runs. Each submission used one node with 4 CPUs and 8gb of memory per CPU. In total the process took 3.5 hours.

7 Results from different sample sizes

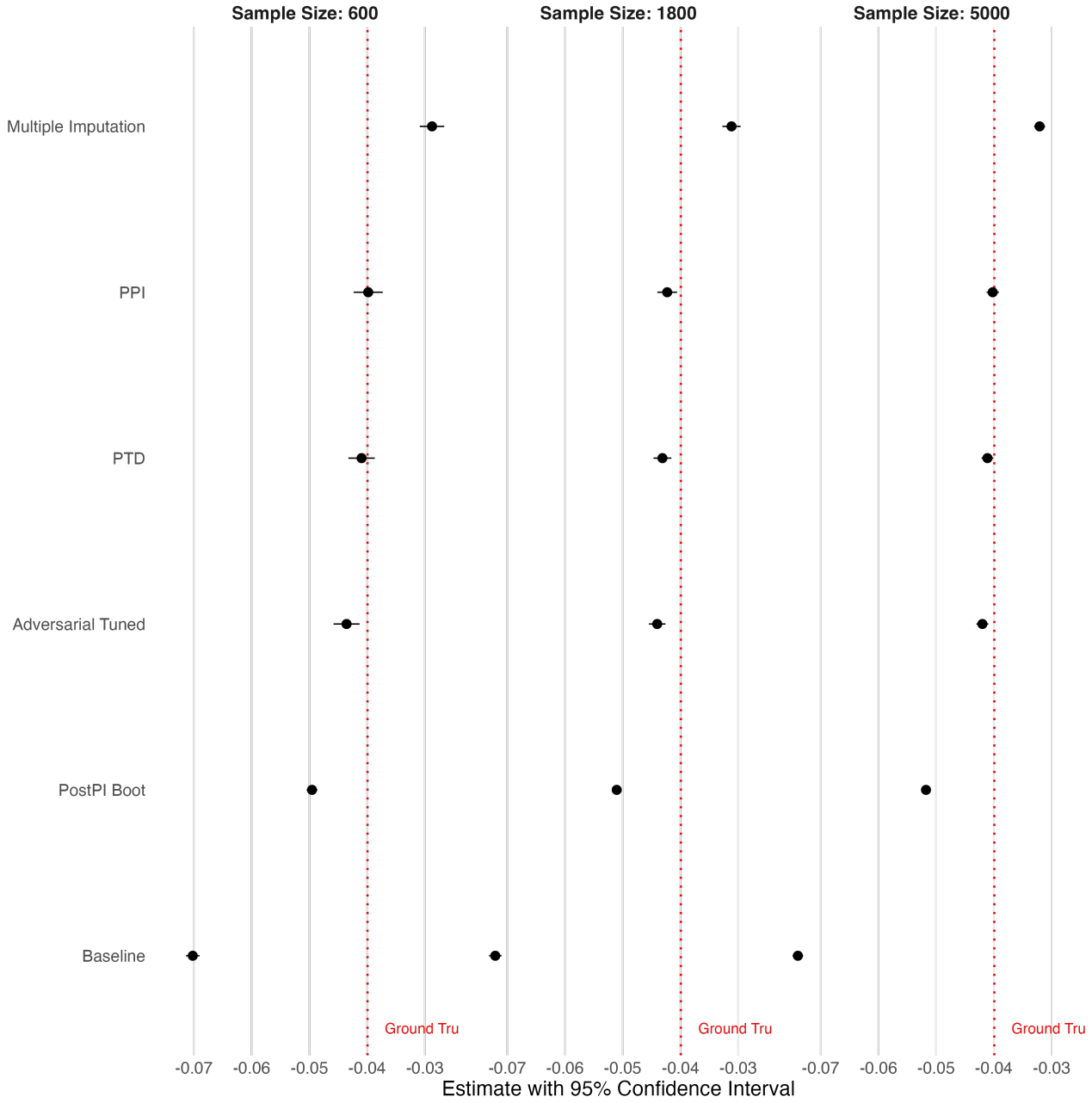

Figure 2: Estimates from various debiasing approaches across labeled sample sizes for the roads example. Figure 6 shows the distribution after 10,000 labeled samples.

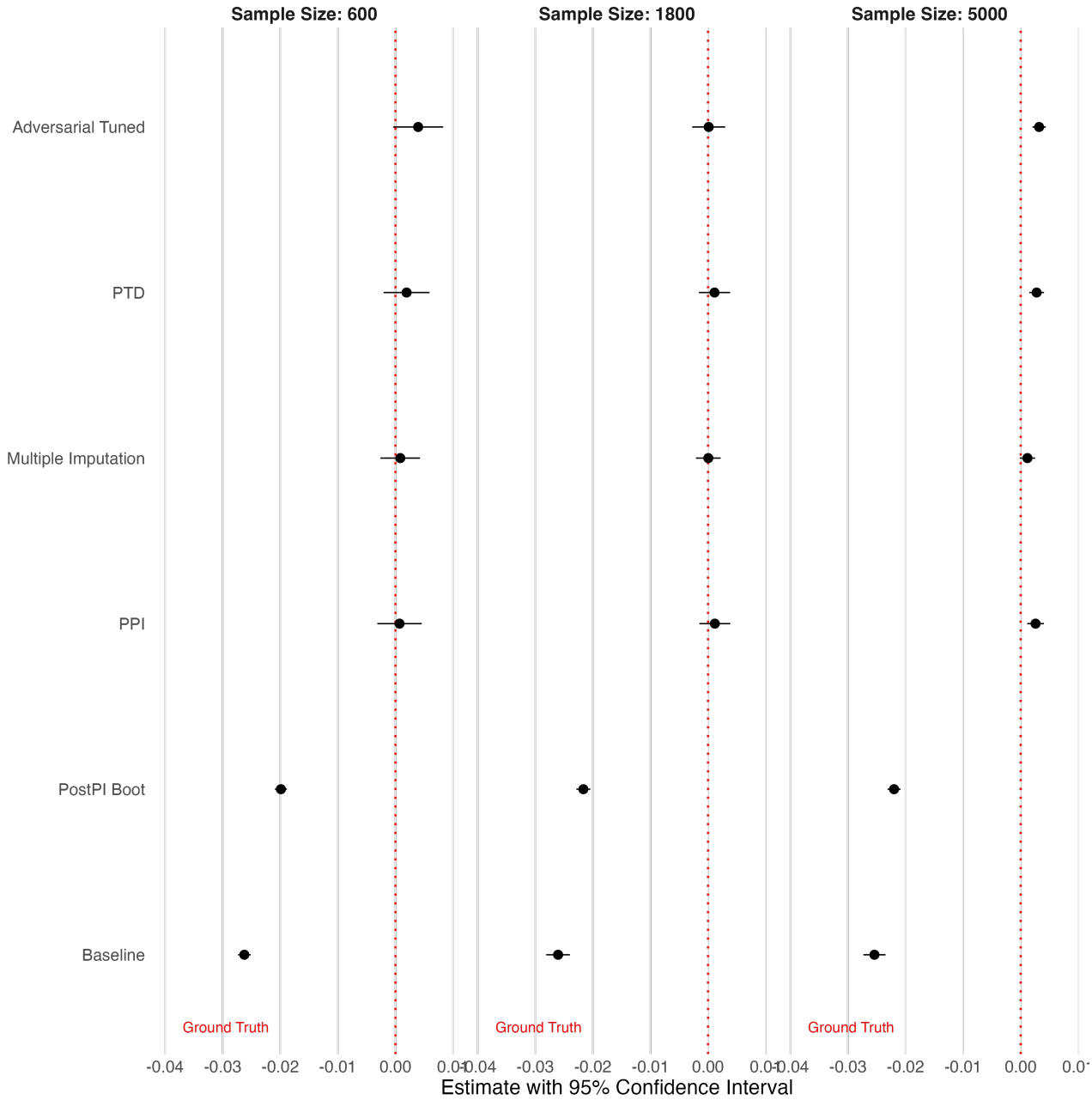

Figure 3: Estimates from various debiasing approaches across labeled sample sizes for the simulated example. Figure 3 shows the distribution after 10,000 labeled samples.

8 Results from different adversaries

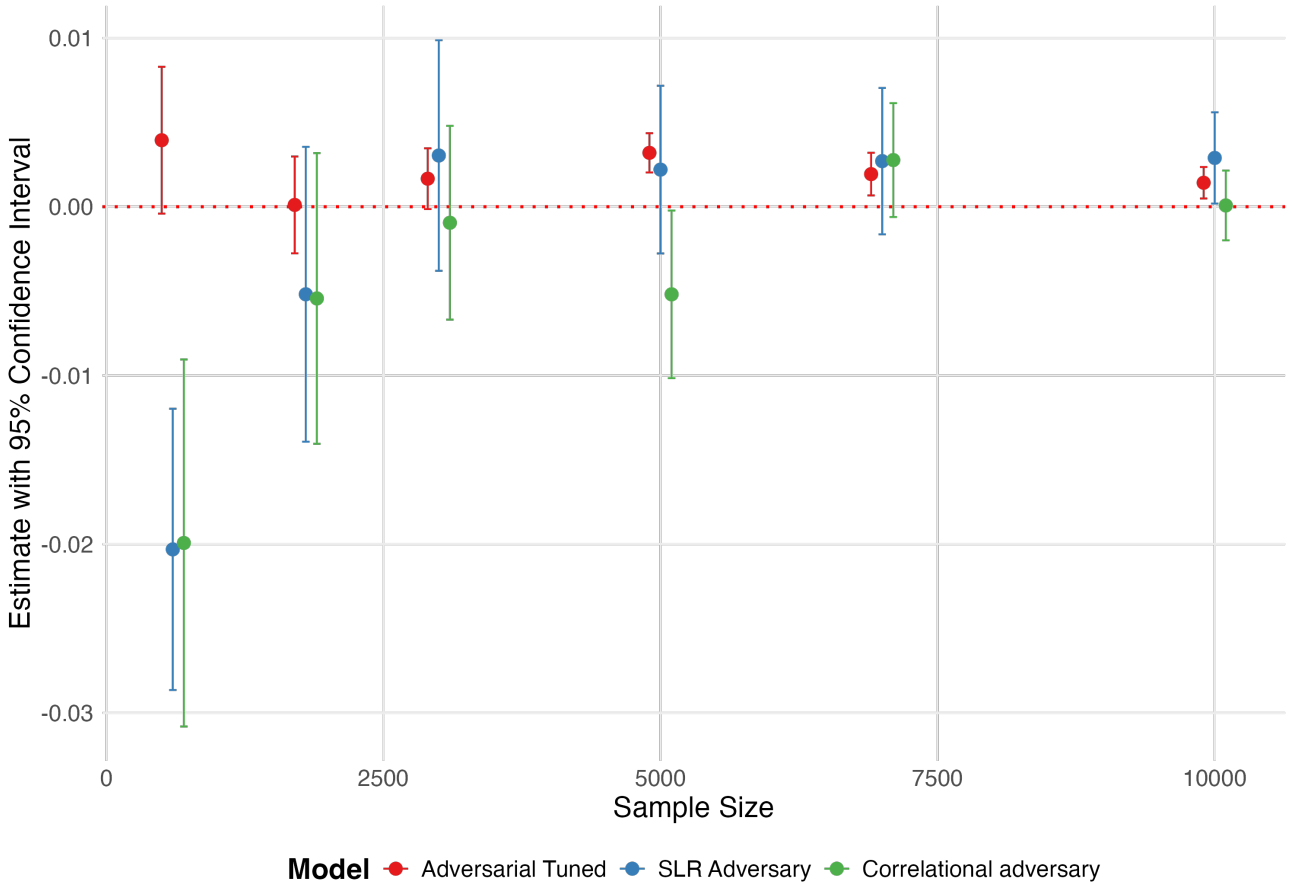

Figure 4: Estimates from various adversarial approaches across labeled sample sizes for the simulated example.

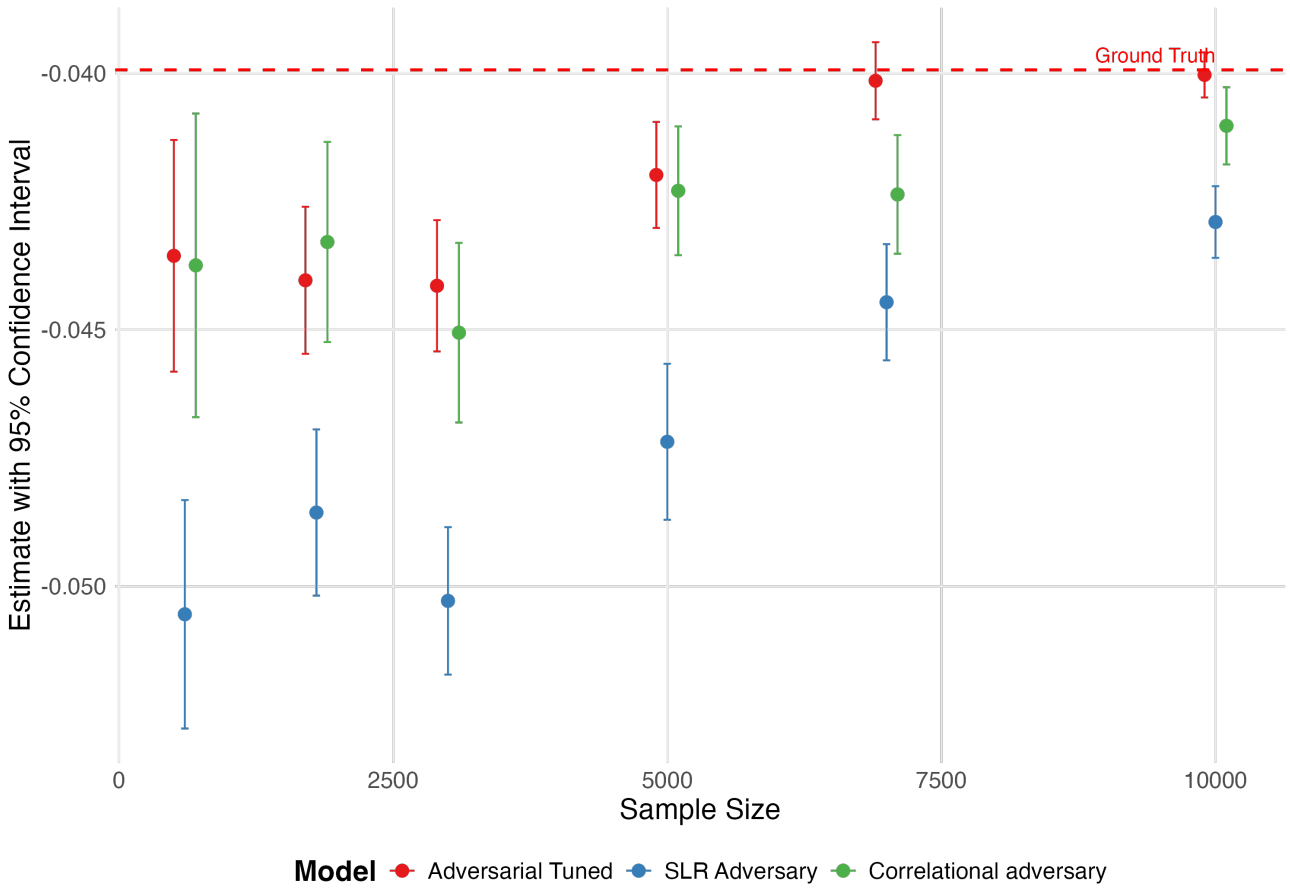

Figure 5: Estimates from various adversarial approaches across labeled sample sizes for the roads example.