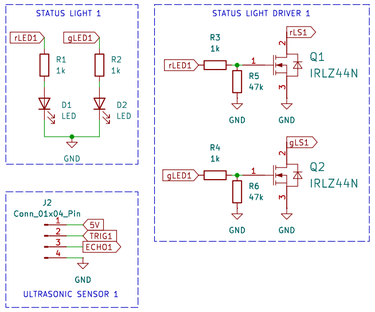

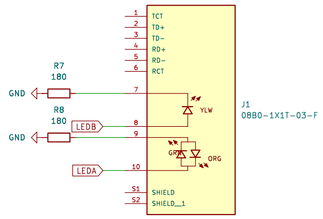

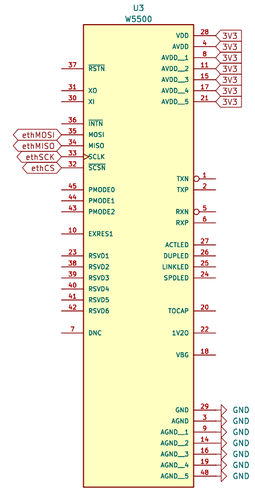

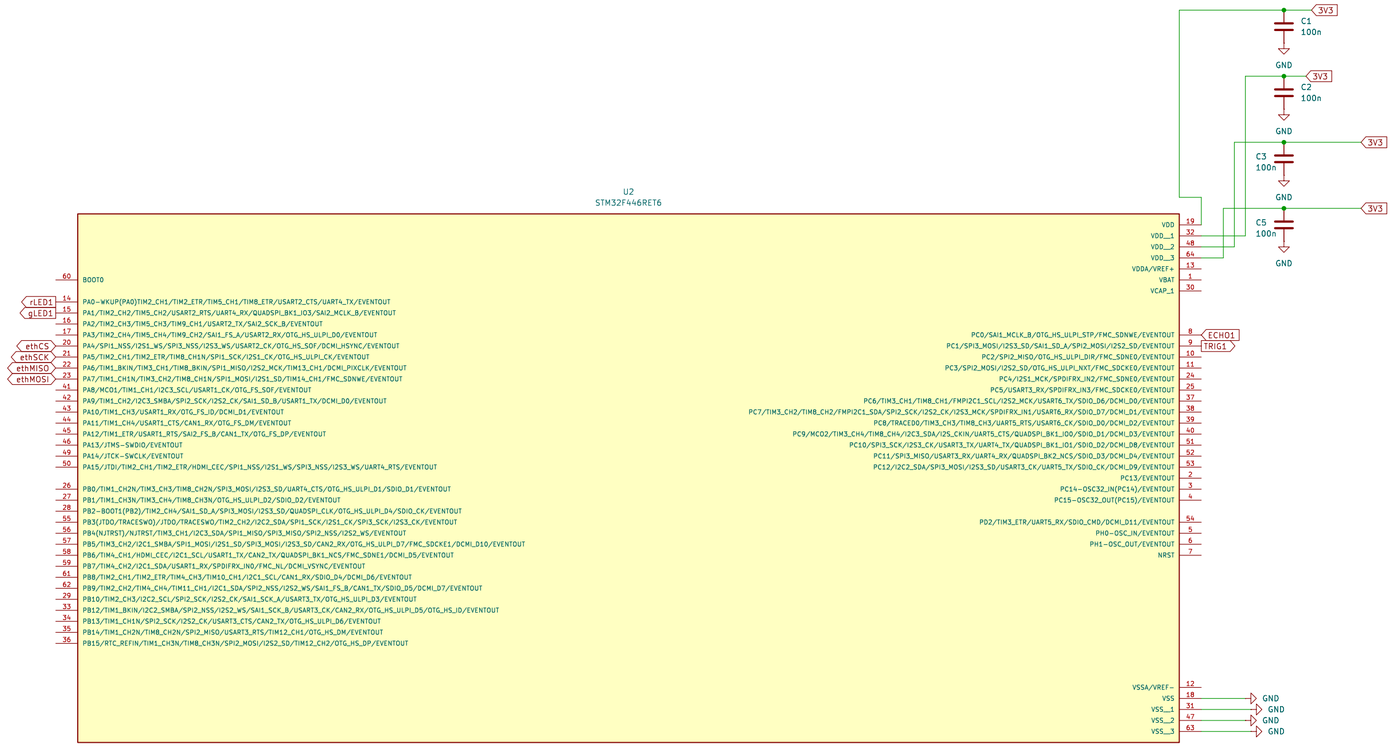

Sheet: /
File: ParkingInformationSupervisionSystem.kicad_sch

Title:

Size: A2	Date:	Rev:
KiCad E.D.A. 9.0.7		Id: 1/1