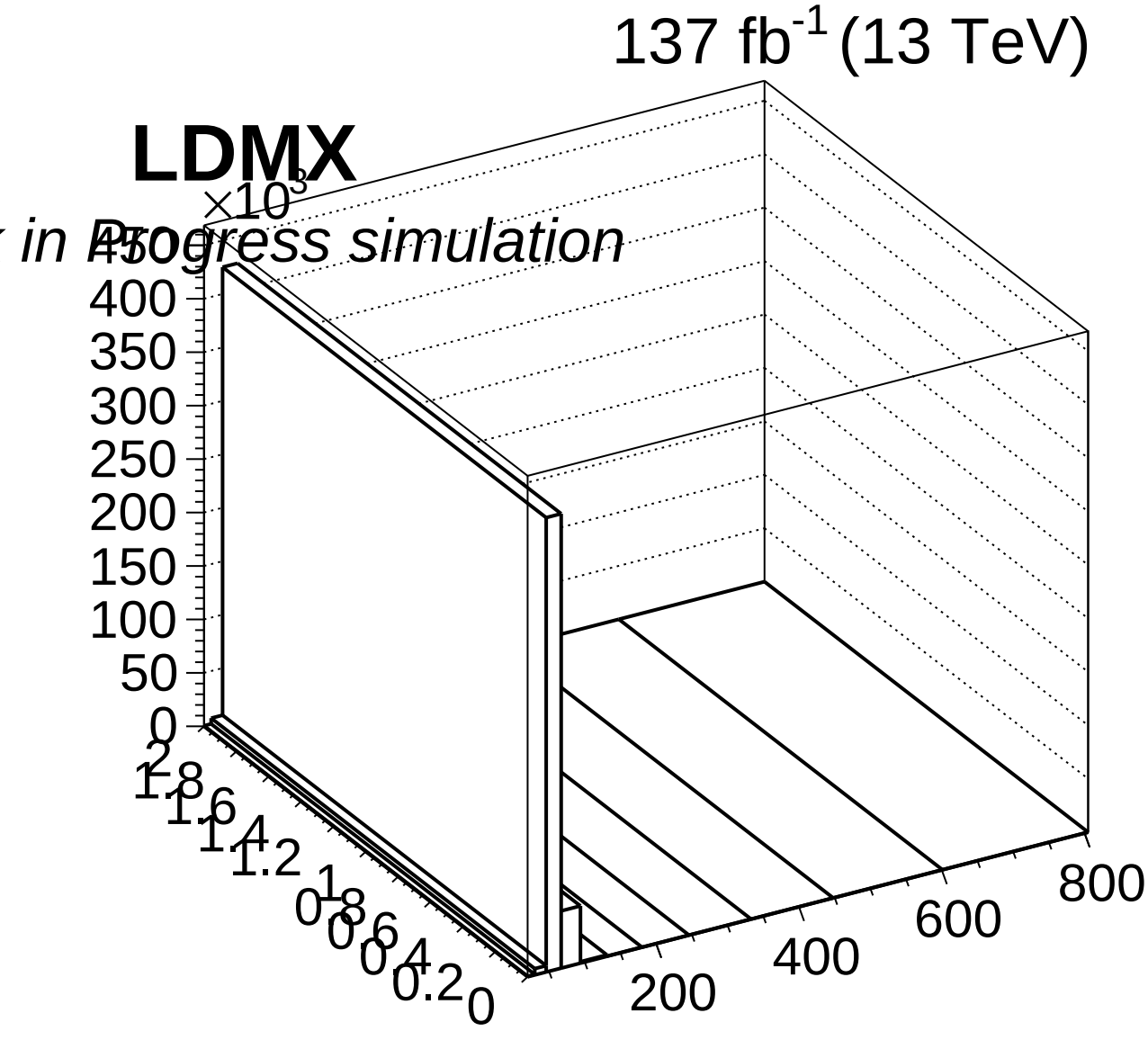
137 fb-1 (13 TeV)
LDMX
in Progress simulation
×10³
450
400
350
300
250
200
150
100
50
0
2
1.8
1.6
1.4
1.2
1
0.8
0.6
0.4
0.2
0
200
400
600
800