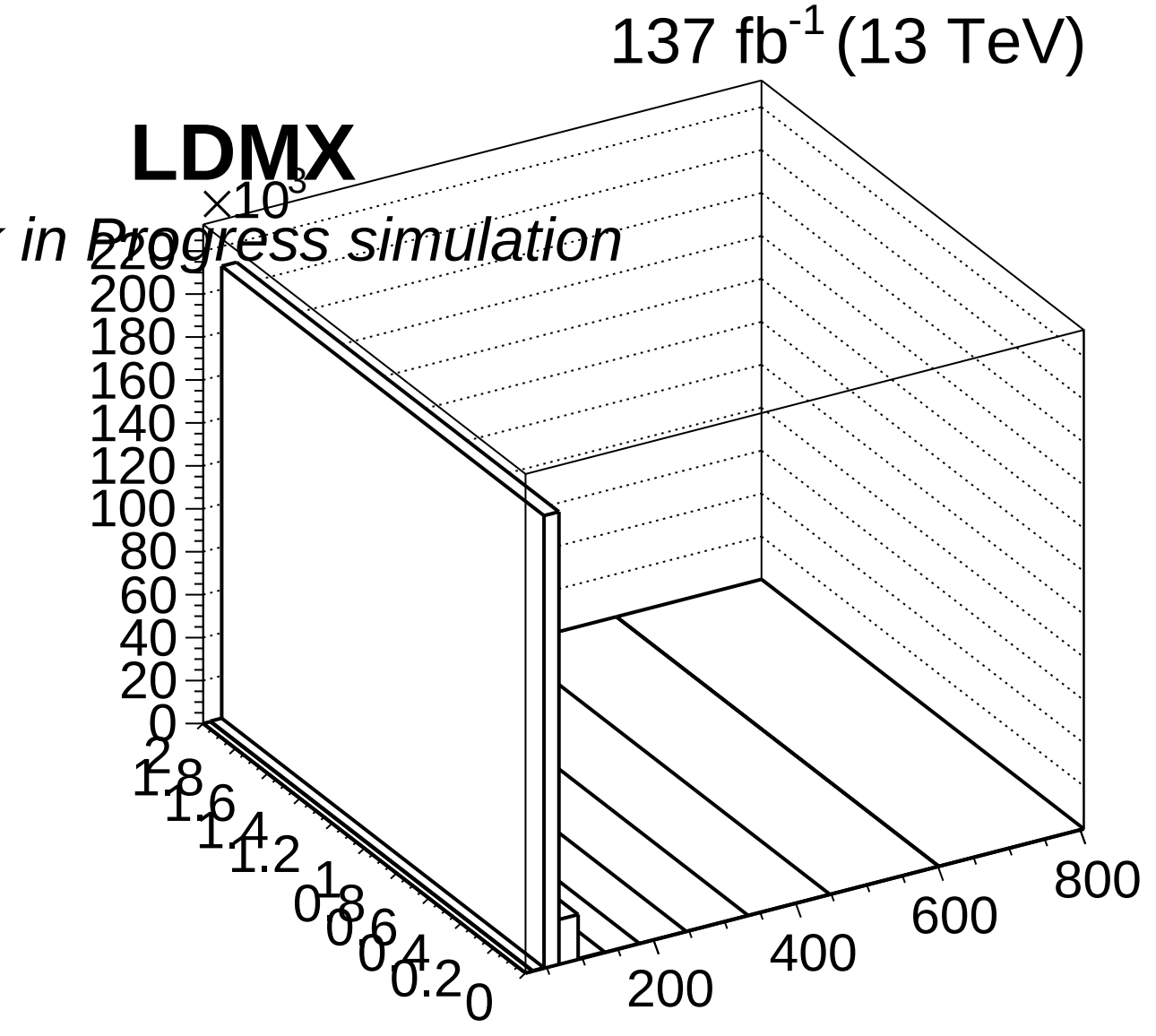
137 fb-1 (13 TeV)
LDMX
in Progress simulation
×10^3
220
200
180
160
140
120
100
80
60
40
20
0
2
1.8
1.6
1.4
1.2
1
0.8
0.6
0.4
0.2
0
200
400
600
800