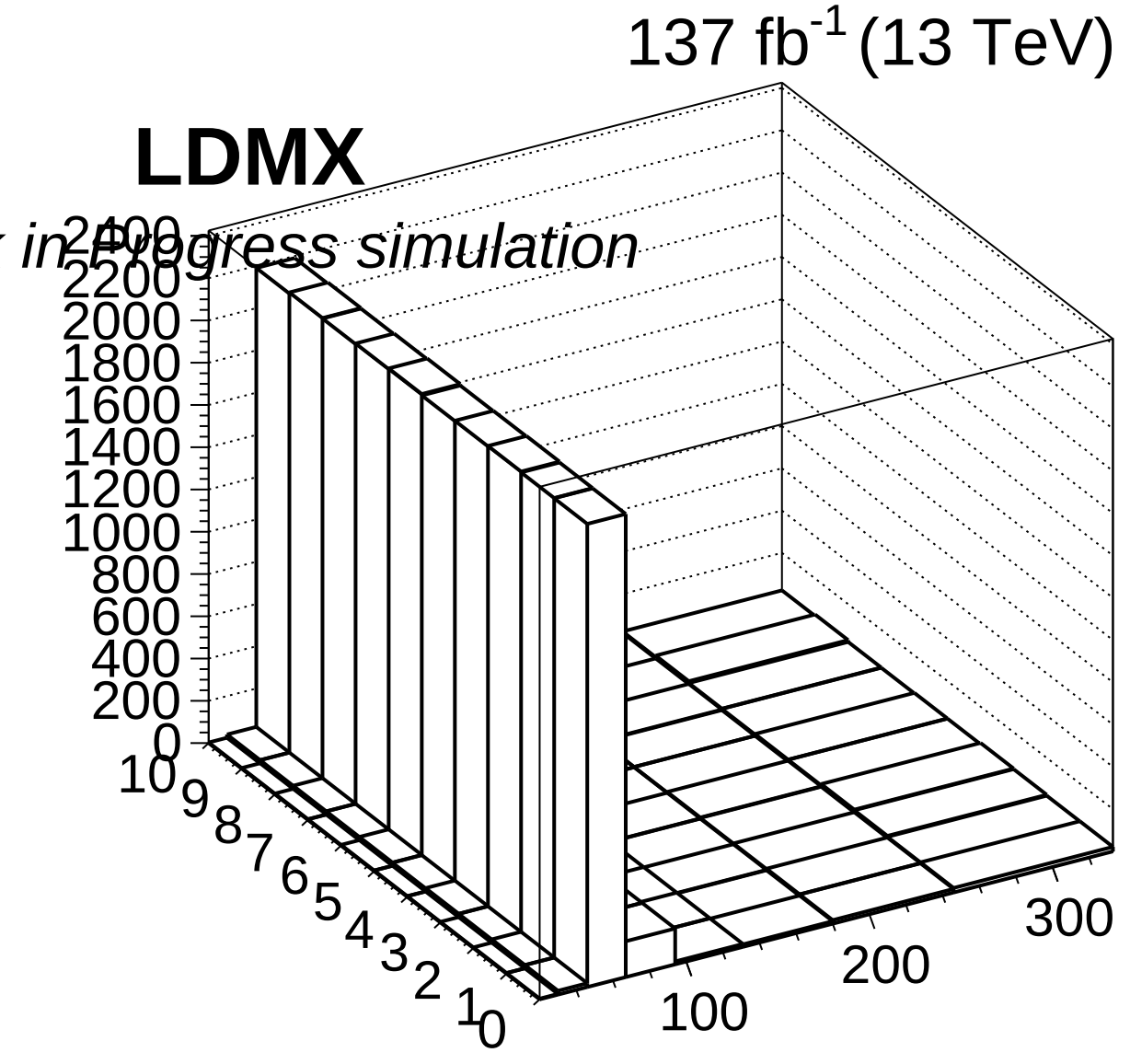
137 fb-1 (13 TeV)
LDMX
in Pythgress simulation
2400
2200
2000
1800
1600
1400
1200
1000
800
600
400
200
0
10
9
8
7
6
5
4
3
2
1
0
100
200
300