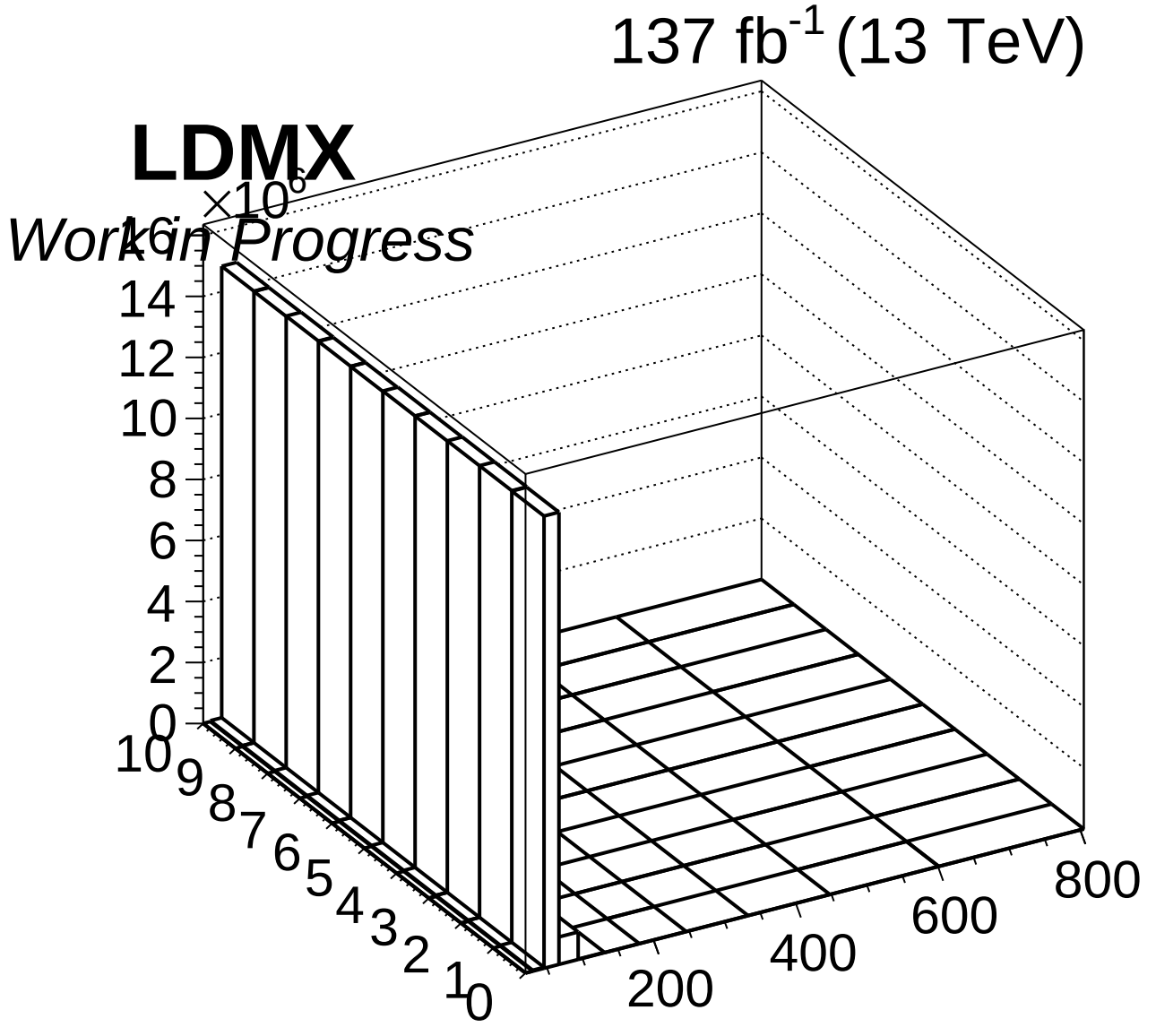
137 fb^{-1} (13 TeV)
LDMX
Work in Progress
$\times 10^6$
16
14
12
10
8
6
4
2
0
10
9
8
7
6
5
4
3
2
1
0
200
400
600
800