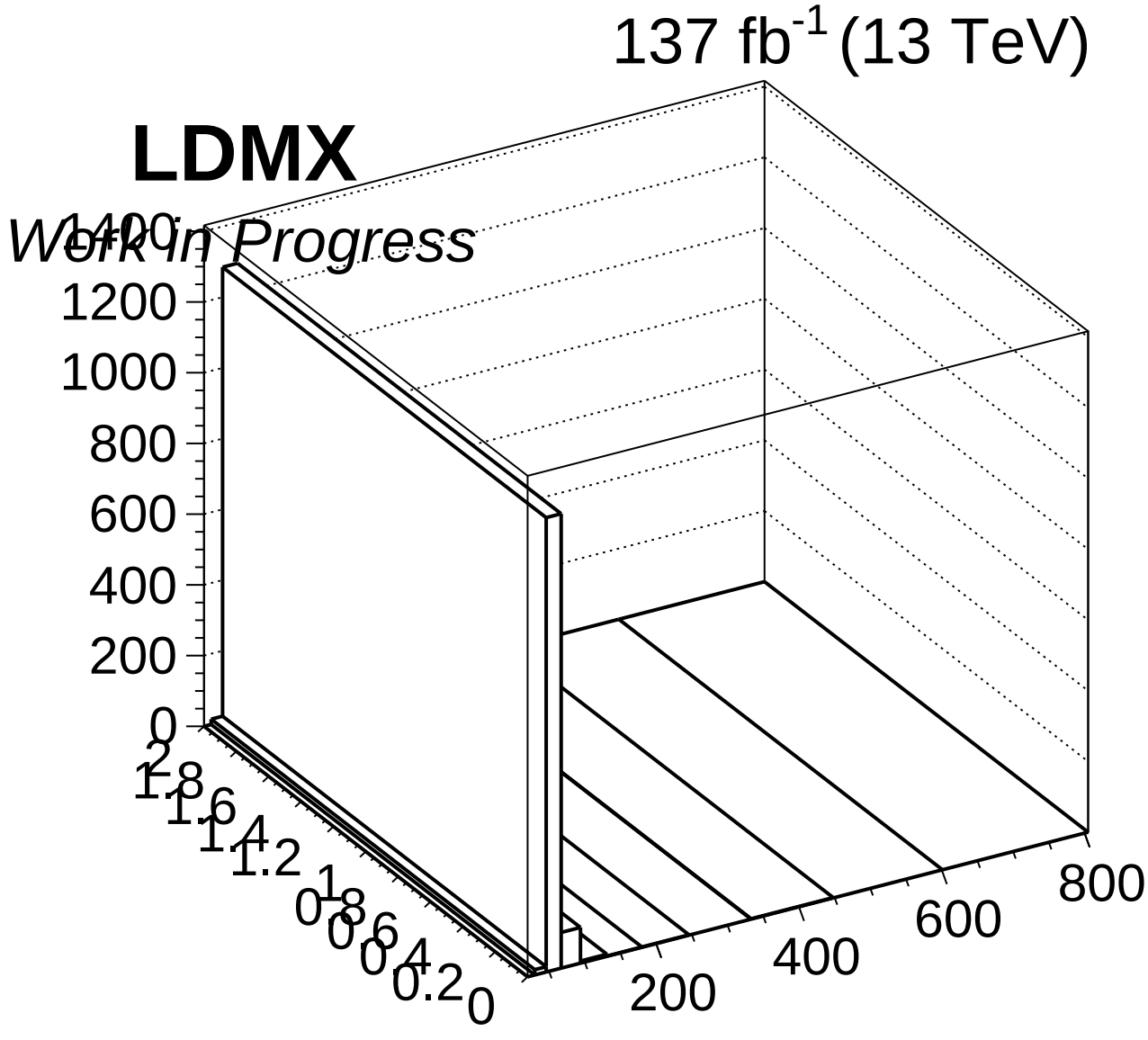
137 fb-1 (13 TeV)
LDMX
Work in Progress
1400
1200
1000
800
600
400
200
0
2
1.8
1.6
1.4
1.2
1
0.8
0.6
0.4
0.2
0
200
400
600
800