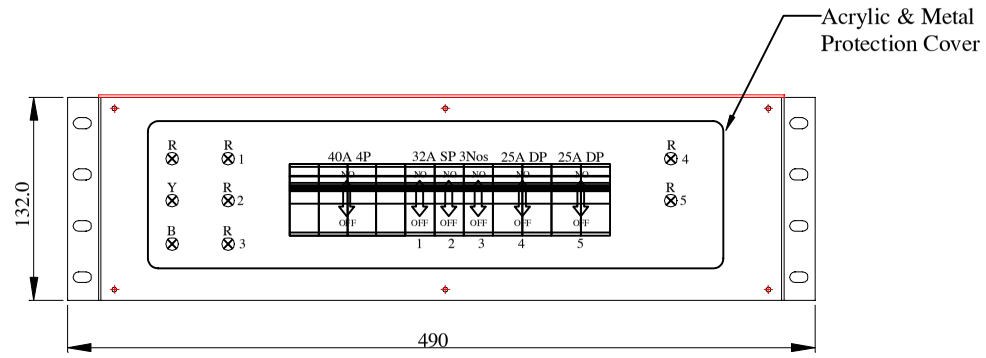

FRONT VIEW

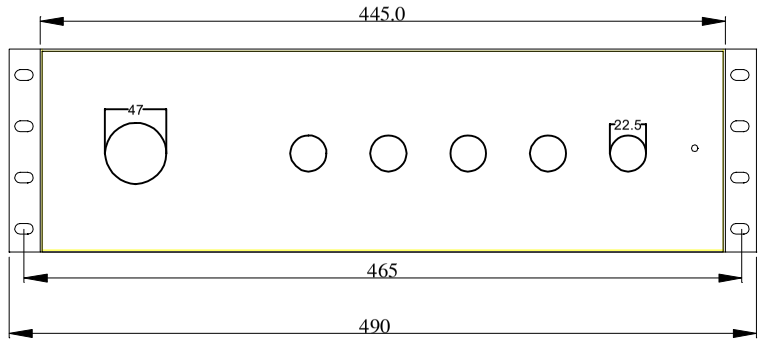

REAR VIEW

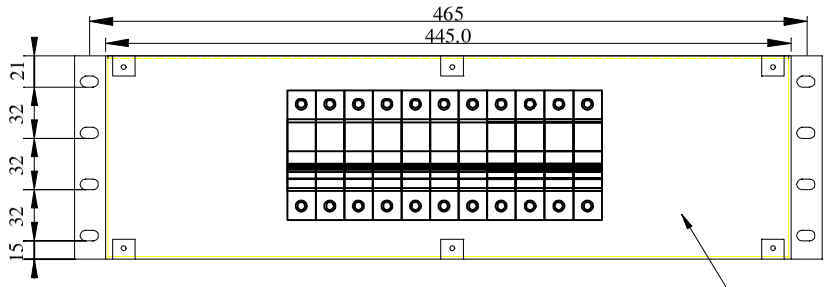

INTERNAL FRONT VIEW

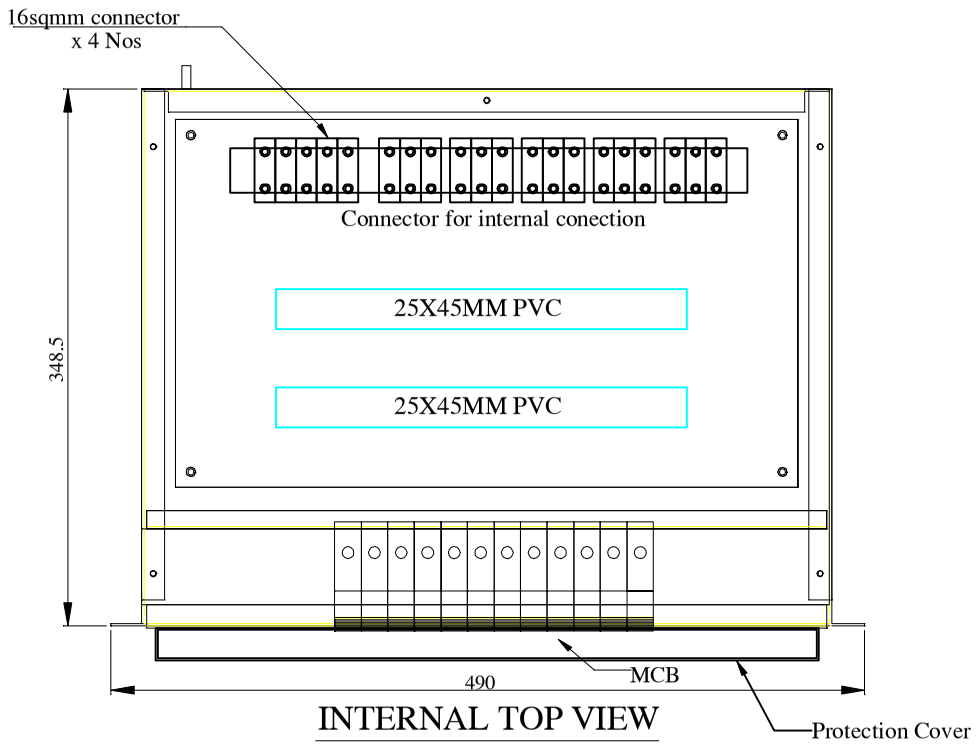

INTERNAL TOP VIEW

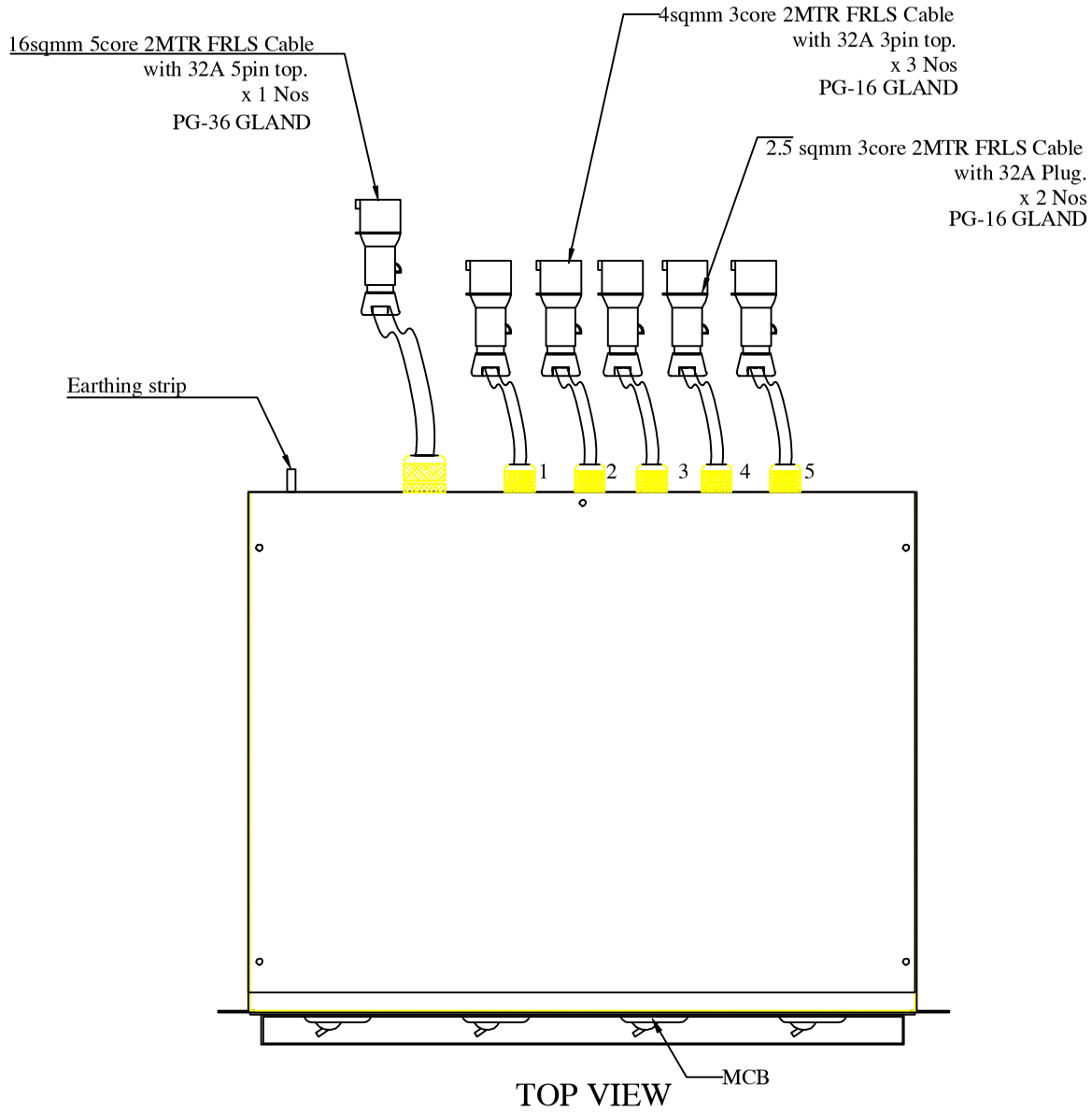

TOP VIEW

NOTE : -

01. THICKNESS OF SHEET FOR BODY	- 1.6mm C.R.C.A
02. THICKNESS OF SHEET FOR DOOR/COVERS	- 1.6mm C.R.C.A
03. GLAND PLATE THICKNESS	- 1.6mm C.R.C.A
04. PAINT SHADE	- RAL - 9005 STRUCTURE (MAKE- NEROLAC)
05. PANEL DIMENSIONAL TOLERENCE+/-5MM	
06. CABLE DUCT SIZE	- 25X45mm.
07. EARTHING CABLE	- 2.5SQ.MM (YELLOW/GREEN)
08. TERMINALS	- AS PER CURRENT RATINGS
09. LUG DETAILS	- PIN TYPE LUG / RING TYPE LUG
10. GLAND DETAILS	- WHITE COLOUR (MAKE JOHNSON)
11. INDICATING LAMP	- 9MM DIA. (R,Y,B COLOUR) (MAKE-DSS)
12. LEBELLINGS	- 9MM YELLOW STICKER - 36MM WHITE STICKER FOR BARCODE
13. POWER CABLE	- NYVIN

Incomer : 40A 4Pole C Curve MCB
Outgoing Breakers :
1. 32A SP MCB D Curve 3 Nos
2. 25A DP MCB C Curve 2 Nos

REV.	DESCRIPTION	INITIALS
00	--	--

MATERIAL;

TRT.

ALL DIMENSIONS IN mm. 0.5

FOR GENERAL TOLERANCE REFER SPEC: 190300000070.

11061920

SCALE - 1:1

TITLE: Power Output Device, 3 kVA and 6 kVA, for Smart Cabinet

DRAWING NO.	325702000000	REV. 00
SHEET	01 OF 03	
APPD.	A.D	28/12/24
CHKD.	A.D	28/12/24
DRAWN	S.H	28/12/24

VERTIV.

VERTIV ENERGY PRIVATE LIMITED
(formerly Emerson Network Power (India) Private Limited)
Plot 115/2, Ramtekdi Industrial Estate,Hadpsar Pune, Maharashtra,INDIA 411 013

DRG.SIZE **A3**

DATED :

PDF.No.

THIS DOCUMENT IS THE PROPERTY VERTIV ENERGY PRIVATE LIMITED REPRODUCTION OR USE WITHOUT PRIOR PERMISSION IS PROHIBITED

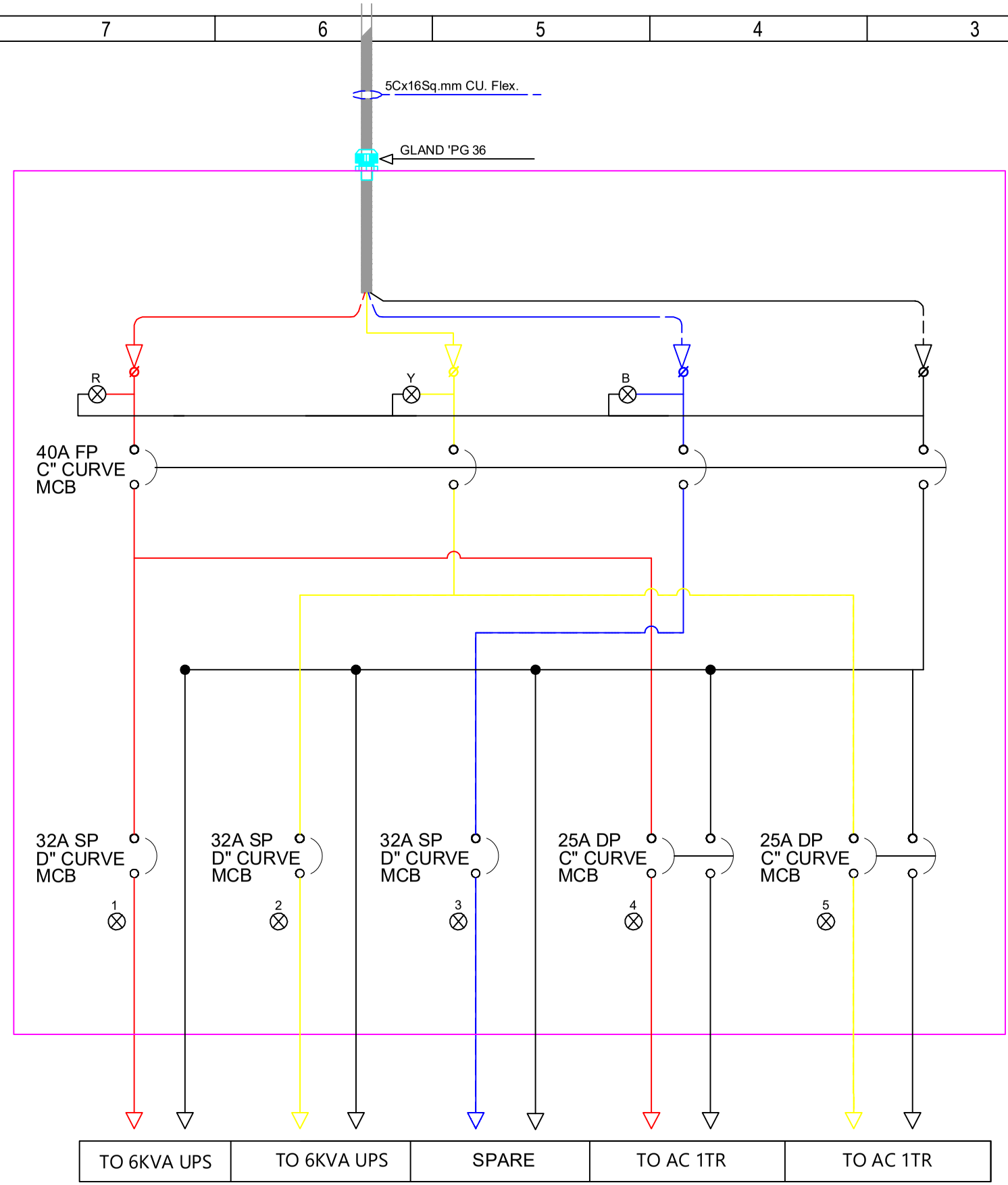

DATED :

PDF.No.

THIS DOCUMENT IS THE PROPERTY
VERTIV ENERGY PRIVATE LIMITED
REPRODUCTION OR USE WITHOUT
PRIOR PERMISSION IS PROHIBITED

REV.	DESCRIPTION	INITIALS
00	--	--

MATERIAL;

TRT.

ALL DIMENSIONS IN mm.

0.5

FOR GENERAL TOLERANCE REFER SPEC: 190300000070.

11061920

SCALE - 1:1

TITLE:

Power Output Device, 3 kVA and 6 kVA, for Smart Cabinet

DRAWING NO.	325702000000	REV. 00
SHEET	02 OF 03	
APPD.	A.D	28/12/24
CHKD.	A.D	28/12/24
DRAWN	S.H	28/12/24

VERTIV.

VERTIV ENERGY PRIVATE LIMITED

(formerly Emerson Network Power (India) Private Limited)

Plot 115/2, Ramtekdi Industrial Estate,Hadpsar Pune, Maharashtra,INDIA 411 013

DRG.SIZE **A3**

BOM For One DCDB

Part No. 325702000000 **DATE: 28-05-2024**

S.No.	Description	Qty	Remarks	Make
1	FRLS Power chord 4 sq.mm 3 core 2m with rewirable 32A 3 Pin industrial plug and socket	2 SET	Input to UPS	Schneider/Scame
2	FRLS Power chord 2.5 sq.mm 3 core 2m with rewirable 32A 3Pin industrial plug and socket	2 SET	Input to AC Cooling	Schneider/Scame
3	FRLS Power chord 16 sq.mm 5 core 2m with 32A 5 Pin industrial plug and socket	1 SET		Schneider/Scame
4	FRLS Power chord 4 sq.mm 3 core 2m with rewirable 32A 3 Pin industrial plug and socket	1 SET	Input to Spare	Schneider/Scame
5	CAT 6 Patch chord with RJ45 connector at both end (2m)	5	RDU sensor cabling	D-Link
6	CAT 6 Patch chord with RJ45 connector at both end (1m)	4		D-Link
7	CAT 6 Patch chord with RJ45 connector at both end (5m)	2		D-Link
8	Hardware kit (M6 Hex Washer, M6 Head Slotted Bolt): 6 Nos. , M6 Cage Nut : 6 Nos.	1 Pack	For 19" Rack Mounting	STD
9	32A, SP,MCB,'D' CURVE	3		LK/Schneider
10	25A, DP,MCB,'C' CURVE	2		LK/Schneider
11	40A, 4P,MCB,'C' CURVE	1		LK/Schneider
12	PG GLAND-36	1		STD
13	PG GLAND-16	5		STD

DATED :

PDF.No.

THIS DOCUMENT IS THE PROPERTY
VERTIV ENERGY PRIVATE LIMITED
REPRODUCTION OR USE WITHOUT
PRIOR PERMISSION IS PROHIBITED

REV.	DESCRIPTION	INITIALS
00	--	--

MATERIAL;

TRT.

ALL DIMENSIONS IN mm.

0.5

FOR GENERAL TOLERANCE REFER SPEC: 190300000070.

11061920

SCALE - 1:1

TITLE:

Power Output Device, 3 kVA and 6 kVA, for Smart Cabinet

DRAWING NO.		REV.
325702000000		00
SHEET 03 OF 03		
APPD.	A.D	28/12/24
CHKD.	A.D	28/12/24
DRAWN	S.H	28/12/24

VERTIV.

VERTIV ENERGY PRIVATE LIMITED

(formerly Emerson Network Power (India) Private Limited)

Plot 115/2, Ramtekdi Industrial Estate,Hadpsar Pune, Maharashtra,INDIA 411 013

DRG.SIZE **A3**