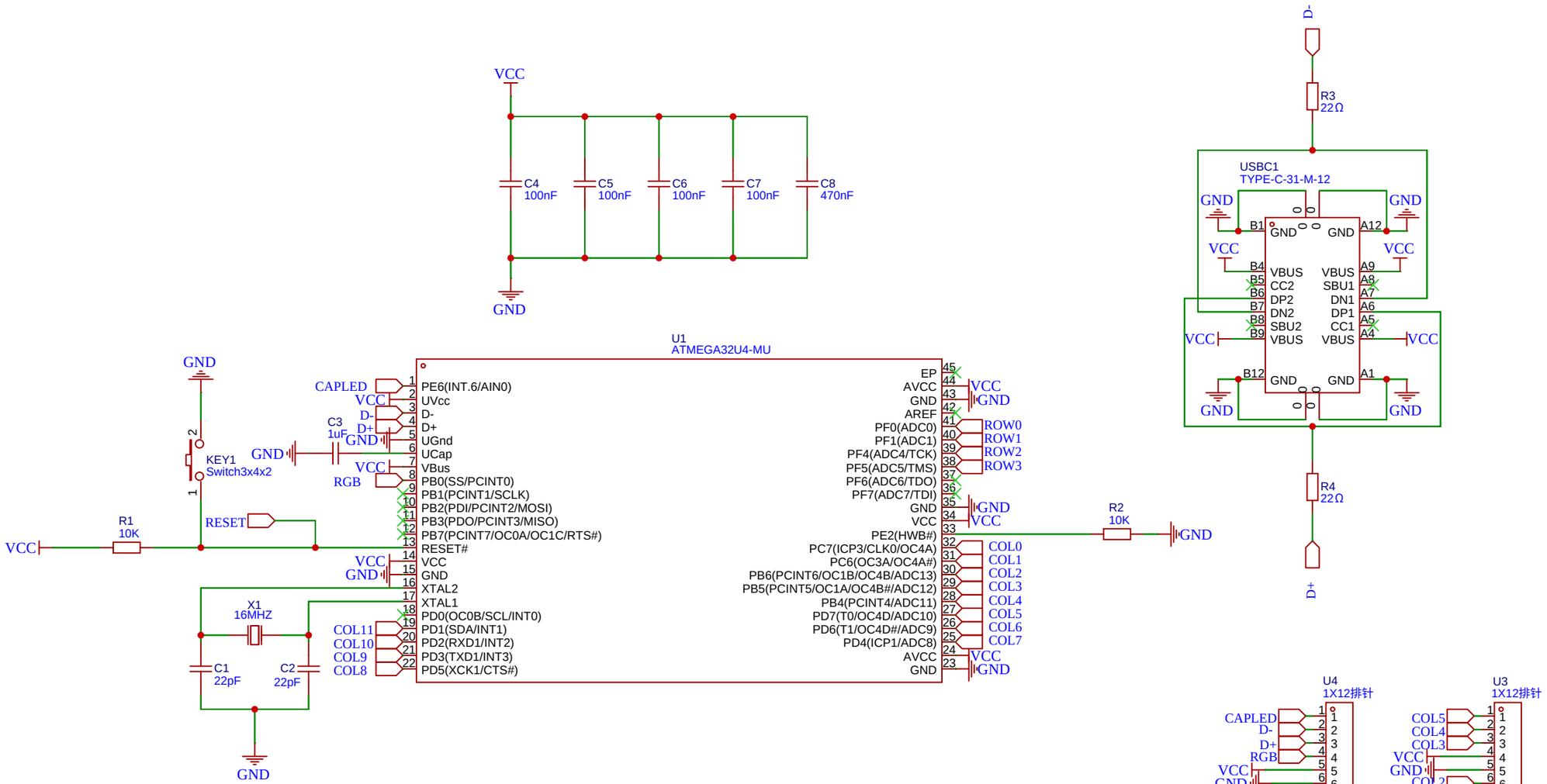

Schematic	主控	Update Date	2023-07-09
		Create Date	2023-07-09
Page	主控	Part Number	
Drawed	keyboard_Tassel43		
Reviewed			
		VER	SIZE	PAGE 1 OF 1
嘉立创EDA		V1.0	A4	嘉立创EDA