Sanoj Swornakar

Numerical Simulation and Experimental Validation of Fluid Flowing Over Triangular Notch of 90º

Abstract

Triangular notches are widely used in hydraulic systems for accurate flow measurement, especially at low discharge rates. In this study, a 90° triangular notch mounted on the vertical wall of a rectangular tank is investigated using Computational Fluid Dynamics (CFD) techniques. Numerical simulations were carried out using ANSYS CFX for various inlet discharges of **0.008 kg/s, 0.0176 kg/s, 0.0304 kg/s, 0.1008 kg/s, and 0.1392 kg/s**. The study focuses on analyzing the upstream water surface profile and flow patterns to determine the discharge coefficient under different flow regimes. The CFD results were compared with experimental measurements and available literature to evaluate the accuracy and reliability of the numerical model. The findings demonstrate good agreement with reference data and highlight the effectiveness of CFD in capturing the complex flow behavior over sharp-crested triangular notches. This analysis provides valuable insights for hydraulic structure design and flow metering applications.

Keywords: CFD, Triangular Notch, Discharge Coefficient, ANSYS CFX, Flow Measurement

---

Nomenclature

Symbol	Description	Unit
H	Head of water above the notch tip	cm
H1	Height from tank base to water level	cm
H2	Height from tank base to notch tip	cm
Q	Discharge (flow rate) through the notch	cm^3/s or kg/s
Cd	Coefficient of discharge	Dimensionless
ρ	Fluid density (water or air)	kg/m^3
μ	Dynamic viscosity	Pa·s
u	Velocity vector	m/s
p	Pressure	Pa
g	Gravitational acceleration	m/s^2
α	Volume fraction of water	Dimensionless
∇	Differential operator (gradient, divergence)	-
Fst	Surface tension force	N
VOF	Volume of Fluid (multiphase model)	-

Symbol	Description	Unit
CFD	Computational Fluid Dynamics	-
RNG k–ε	Renormalization Group k-epsilon turbulence model	-
LES	Large Eddy Simulation turbulence model	-
SIMPLEC	Semi-Implicit Method for Pressure Linked Equations – Consistent	-

1. Introduction

Triangular notches, also known as V-notch weirs, are used widely in hydraulic engineering to measure water flow in open channels. Because their shape is simple and clear, water flows through them in a steady way, which makes it easy to find how much water is passing just by looking at the level before the notch. These notches are used in places like rivers, drains, irrigation canals and wastewater plants. Measuring water flow rightly is important for managing water, controlling floods and for building water systems.

The flow through a triangular notch mostly depends on how high the water level is above the notch (called upstream head) and on the shape of the notch. One value, discharge coefficient (Cd), helps make the flow calculation more correct. This value changes depending on water conditions and the notch design, so it is important to find accurate value of Cd.

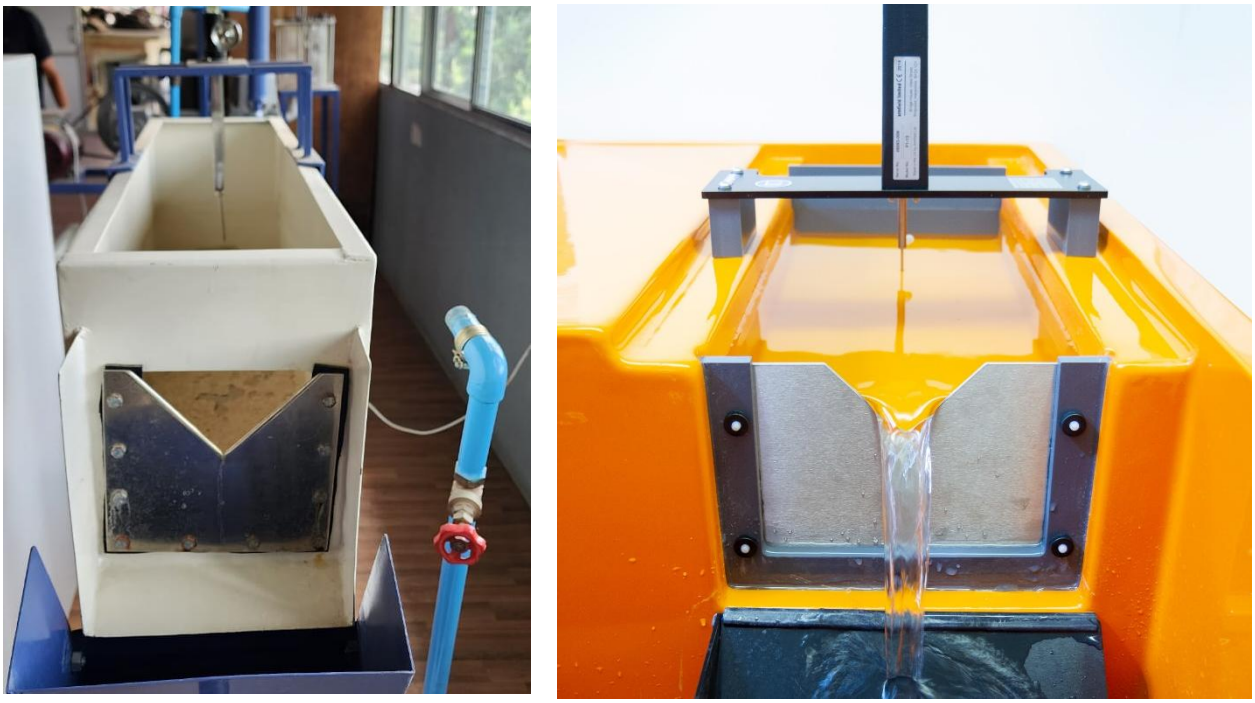

Figure 1: Flow Over Triangular Notch

In the previous study by Hashim Alhashimi and Al Zubaidy (2013), the authors performed a numerical simulation of two-phase flow over the Mandali Dam ogee spillway using CFD techniques in ANSYS FLUENT. They applied both the Volume of Fluid (VOF) and Mixture Multiphase Flow (MMF) models to simulate the free-surface flow and compared their results with experimental data from a physical model of the dam. The results showed that the VOF model produced more accurate predictions of discharge and flow profiles, with maximum error less than 3%, compared to the MMF model which had slightly higher discrepancies. They successfully validated the numerical model against experimental data across seven different headwater elevations, concluding that CFD can be a reliable and cost-effective tool for modeling complex hydraulic structures like ogee spillways (Hashim Alhashimi & Al Zubaidy, 2013) [1].

In contrast, the paper "Hydraulic analysis of a compound weir simulated with CFD" (2021) focused on a compound weir combining a 90° triangular notch with a rectangular section. Using CFD simulations, the researchers analyzed flow characteristics, discharge behavior, and the coefficient of discharge (Cd) across different flow conditions. The 90° triangular notch was selected due to its precision at low flow rates. The CFD results were validated using experimental and literature data, with maximum error of 0.74% in discharge and 7.8% in Cd. The study demonstrated that CFD not only provides detailed visualization of flow behavior over sharp crests but also closely matches experimental results, making it useful for weir design and optimization (Hydraulic Analysis of a Compound Weir, 2021) [2].

Al-Dabbagh and Al-Zubaidy (2018) conducted a numerical investigation of water flow over triangular broad-crested weirs using Computational Fluid Dynamics (CFD) under various flow regimes. The study evaluated the effects of different opening angles (90°, 100°, 110°, and 120°) on flow characteristics such as upstream water level, downstream velocity, and pressure distribution. Simulations were carried out for three discharges: 0.012, 0.036, and 0.06 m^3/s. The results showed that increasing the opening angle led to a reduction in upstream water level, with each 10° increase causing an average drop of about 1.5 cm. At lower discharge (0.012 m^3/s), uncovered regions formed downstream of the triangular weirs, unlike the rectangular weir which maintained a thin water cover. Pressure exerted on the downstream bed also varied with angle and discharge, showing higher values for sharper angles (e.g., 90°) and lower for wider ones (e.g., 120°). Additionally, the impact point of falling water shifted downstream with increasing discharge and sharper angles, indicating a potential area needing reinforcement to resist erosion. The CFD results closely matched reference studies and highlighted the triangular weir's sensitivity to geometric changes and flow conditions [3].

Triangular (V-notch) weirs are widely simulated using CFD due to their versatility in **flow measurement**, **level control**, and **aeration performance** in hydraulic systems. CFD models—typically employing Volume of Fluid (VOF) for free-surface tracking and turbulence closures like RNG k-ε or LES—accurately reproduce water surface profiles, velocity distribution, and discharge coefficients, with excellent agreement (<3 %) against lab data [4]. In water treatment applications, a 90° triangular notch has been shown to enhance aeration by promoting plunging jets and turbulent mixing, improving oxygen transfer compared to other weir geometries [5]. Practically, CFD allows engineers to **optimize notch angle and channel conditions** (e.g., approach width,

sill height, turbulence effects) for accurate low-flow measurement devices, side weirs, and spillway designs. Moreover, identifying flow separation zones, air entrainment, and nappe behavior helps guide **structural reinforcement** in downstream impact zones to mitigate erosion and ensure longevity of hydraulic installations.

---

2. Methodology

2.1 Computational Domain and Boundary Conditions

Table 1: Domain and Its Boundary Condition

S.No.	Region	Type	Settings
1	Inlet pipe	Mass Flow Inlet	Water VF = 1, Air VF = 0, mass flow (e.g., 0.0608 kg/s)
2	Pipe–tank connection	General Interface	Between pipe outlet and tank base
3	Notch–tank interface	General Interface	Between notch and both tank walls
4	Outlet (bottom)	Opening	Pressure = 1 atm, Water VF = 0, Air VF = 1
5	Tank tops	Opening	Pressure = 1 atm, Water VF = 0, Air VF = 1
6	Walls (all)	No-slip, Smooth	Standard wall condition

Numerical Setup and Boundary Conditions

The simulation was performed using a steady-state multiphase flow model with the Volume of Fluid (VOF) method to capture the air–water interface. The working fluids were water and air at 25 °C, with physical properties set as:

- Water: $\rho = 997$ kg/m³, Air: $\rho = 1.225$ kg/m³

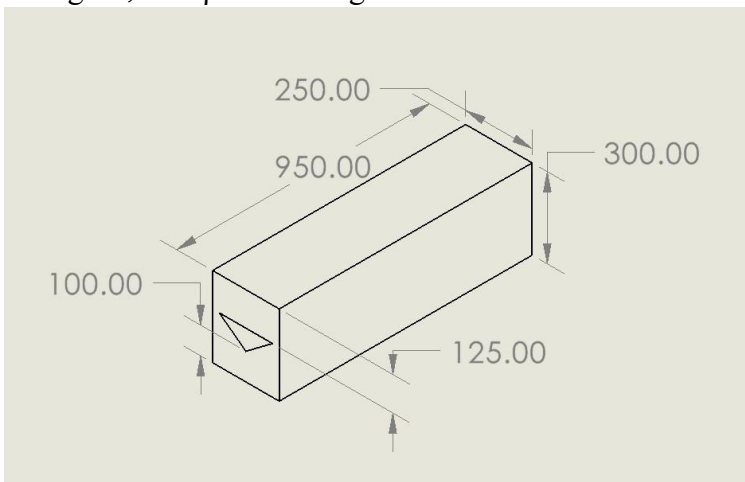

Figure 2: Design Dimension of Domain

The computational domain consists of two rectangular tanks connected via a 90° triangular notch. The upstream tank measures 95 cm × 25 cm × 30 cm, while the downstream tank is 95 cm × 50 cm × 30 cm. A triangular notch with 90º angle of tip, height 7.5 cm and thickness 2.5 mm is placed on the vertical face of the upstream tank as shown in figure 2, with its bottom vertex located 10 cm above the base. The notch is symmetrically placed, leaving 2.5 cm margin on each side. A general connection interface links the notch to both the upstream and downstream tanks.

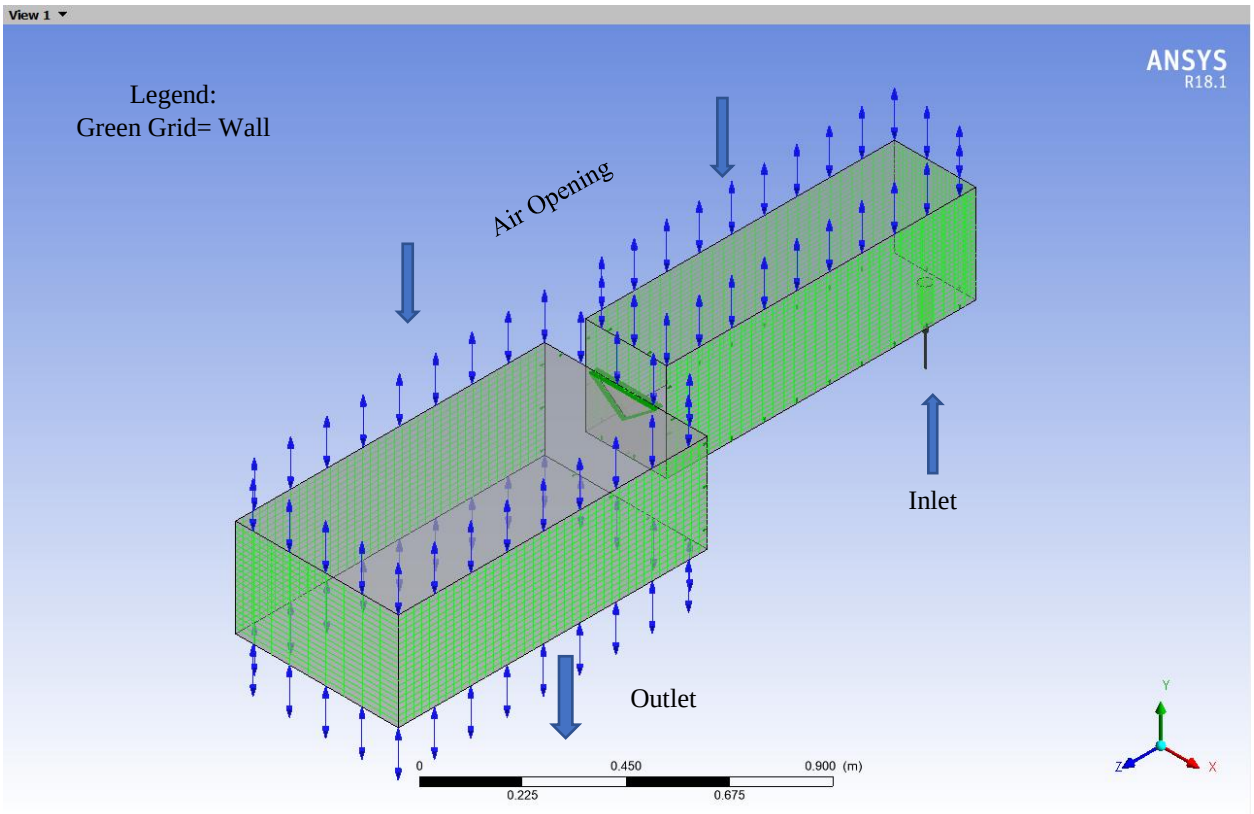

Figure 3: Domain and its label boundary

Water is introduced via a cylindrical pipe inlet (diameter = 3.2 cm, length = 10 cm), located 3 cm from the tank inlet and centered along the width. A mass flow inlet condition is applied to this pipe, with values varying (e.g., 0.0304 kg/s, 0.0608 kg/s, etc.). The volume fraction at the inlet is set as 1 for water and 0 for air.

The outlet is modeled at the bottom of the downstream tank as an opening boundary with static pressure = 1 atm and flow direction set to outward. The top surfaces of both tanks are also defined as opening boundaries, with a volume fraction of 1 for air and 0 for water, representing the open-to-atmosphere condition.

All side walls, including the notch and pipe walls, are treated as smooth, no-slip walls as show my green grid on figure 3. A general connection interface is applied between the pipe outlet and the upstream tank bottom, ensuring proper fluid continuity.

2.2 Governing Equations and Numerical Method

The numerical simulation of fluid flow over the 90° triangular notch was carried out using the steady-state multiphase Volume of Fluid (VOF) method in ANSYS CFX. The flow was assumed to be incompressible, Newtonian, and isothermal, with two immiscible phases: water (primary phase) and air (secondary phase). The simulation assumed laminar or weakly turbulent flow, depending on the inlet velocity and domain scale, and gravitational effects were included in the vertical direction.

The governing equations used in the model include:

Continuity Equation (Mass Conservation)

$$\nabla \times \vec{u} = 0 \tag{1}$$

Momentum Equation (Navier- Stokes)

$$\boldsymbol{\rho}(\vec{\boldsymbol{u}} \times \nabla\vec{\boldsymbol{u}}) = -\nabla \mathrm{p} + \mu\nabla^2\vec{\boldsymbol{u}} + \boldsymbol{\rho}\vec{\boldsymbol{g}} + \vec{\boldsymbol{F}}_{\boldsymbol{st}} \tag{2}$$

Where:

- $\vec{\boldsymbol{u}}$ is the velocity vector
- P is pressure
- **μ** is dynamic viscosity
- **ρ** is density
- $\vec{\boldsymbol{g}}$ is gravitational acceleration
- $\vec{\boldsymbol{F}}_{\boldsymbol{st}}$ represents surface tension force (captured via VOF)

Volume of Fluid (VOF) Equation

The volume fraction of the water phase α is solved using a scalar transport equation:

$$\frac{\partial \alpha_w}{\partial t} + \nabla \times (\alpha_w \times \vec{\boldsymbol{u}}) = 0 \tag{3}$$

Where α_w = 1 indicates a cell full of water,

and α_w = 0 indicates air.

Interface cells lie between $0 < \alpha_w < 1$.

Coefficient of Discharge

$$Cd = \frac{15Q}{8 \times \sqrt{2g} \times H^{\frac{5}{2}}} \tag{4}$$

Numerical Scheme and Discretization

- The finite volume method (FVM) was used to discretize the governing equations over the computational domain.
- High-resolution advection schemes were employed to capture sharp gradients in the volume fraction and velocity fields.
- The SIMPLEC (Semi-Implicit Method for Pressure-Linked Equations–Consistent) or pressure-based solver was used for pressure-velocity coupling.
- The algebraic Multi-Phase Interface Capturing method built into ANSYS CFX was used to track the water-air interface.
- A second-order upwind scheme was used for momentum and turbulence terms to improve accuracy.
- The simulation was run under steady-state conditions, and convergence was monitored through residuals and mass imbalance.

2.3 Mesh Independence Study

Table 2: Mesh Parameters

S.No	Region	Nodes	Quads	Hexas	Region
1	Cylinder Inlet Pipe	18,225	2,744	16,800	Cylinder Inlet Pipe
2	Upstream Tank	15,000	3,406	13,224	Upstream Tank
3	Triangular Notch	55,422	55,420	27,423	Triangular Notch
4	Downstream Tank	8,000	2,526	6,669	Downstream Tank
5	**Total**	**96,647**	**64,096**	**64,116**	**Total**

The mesh was created structure meshing in ANSYS ICEM CFD by dividing the whole model into four parts: the inlet pipe, upstream tank, triangular notch, and downstream tank. Each part was meshed separately using hexahedral (hex) elements to ensure good quality and better control over the mesh size in important areas. Finer mesh was applied near the notch and free surface region to accurately capture the water-air interface. After generating the meshes for each part, they were all combined in ANSYS CFX-Pre-using general connection interfaces, which allowed smooth flow and data transfer between the regions. This method helped improve both accuracy and flexibility

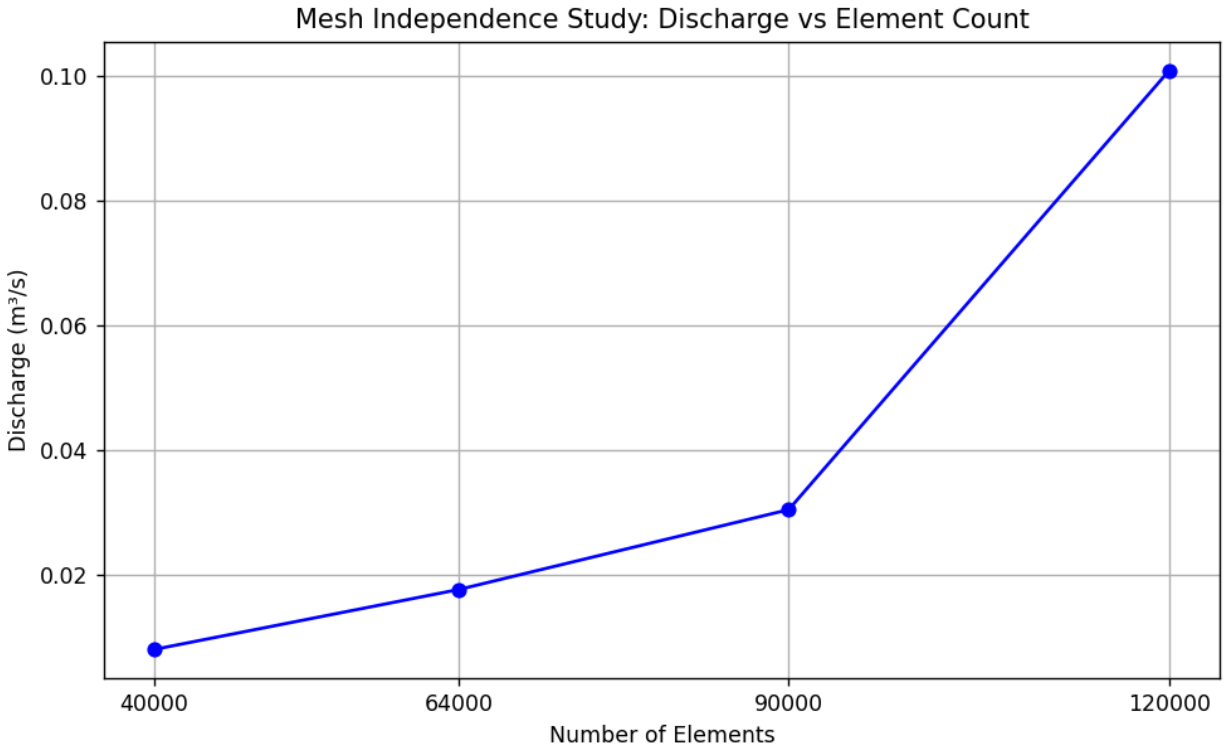

Figure 4: Mesh Independence Graph

of the simulation setup. The final mesh used in the simulation consists of approximately 96,647 nodes and 64,116 hexahedral elements, with refined resolution near critical regions such as the notch and free surface. Key results including discharge and upstream water level were monitored and compared across different mesh densities (coarse, medium, fine) in preliminary tests.

Table 3: Mesh Independence References

S.No.	**Mesh Type**	**Approximate Total Nodes**
1	Coarse	< 25,000
2	Medium	25,000 – 60,000
3	Fine	60,000 – 120,000
4	Very Fine	> 120,000

2.4 Validation Benchmark

To validate the accuracy of the CFD simulation, results were compared with experimental data obtained from a previous study conducted by the author using a physical model of a 90° triangular notch. The experiment involved discharging water through the notch mounted on a rectangular tank wall and measuring the water head difference H=H1-H2 and Q is the discharged. Table 4 presents the measured discharges (converted from cm^3/s), water head values, and the calculated discharge coefficient (Cd) using the standard triangular notch equation. The average discharge coefficient across all data points was approximately 0.831, indicating variation based on flow rate and head height. This experimental Cd was used to compare against the CFD results for model validation.

Table 4: Experimental Data

S.No.	Discharge (cm^3/s)	H2(cm)	H=H1-H2 (cm)	Cd	Average Cd
1	30.4	11.53	2.65	1.125668905	
2	60.8	12.89	4.01	0.799271667	
3	100.8	13.64	4.76	0.863167184	**0.831219426**
4	8	10.34	1.46	1.314799766	
5	139.2	14.3	5.42	0.861574406	
6	17.6	12.2	3.4	0.3709532916	

---

3. Results and Discussion

3.1 Flow Characteristics and the Head Above Tip of Notch

Table 5: Simulation Data from ANSYS CFX

S.No.	Discharge (cm^3/s)	H2(cm)	H=H1-H2 (cm)	Cd	Average Cd
1	30.4	14.0546	4.0546	0.189851966	
2	60.8	14.32	4.32	0.663507724	
3	100.8	13.8564	3.8564	1.461023217	**0.723186**
4	8	12.5371	2.5371	0.330291802	
5	139.2	14.3366	4.3366	1.504587994	
6	17.6	14.3401	4.3401	0.189851966	

The results above were calculated by first determining the height of the water level at the notch crest. This was done by drawing a vertical line 12.5 cm from the edge of the notch face and using the probe tool to find the point where the water volume fraction is 1. The height at this point was recorded as the water level. This height was then used in the discharge equation to calculate the coefficient of discharge.

3.2 Contour and Streamline Plots

The simulation shows the water volume fraction distribution within the computational domain. At the inlet, the water volume fraction is nearly 1, indicating full water flow. As the flow moves

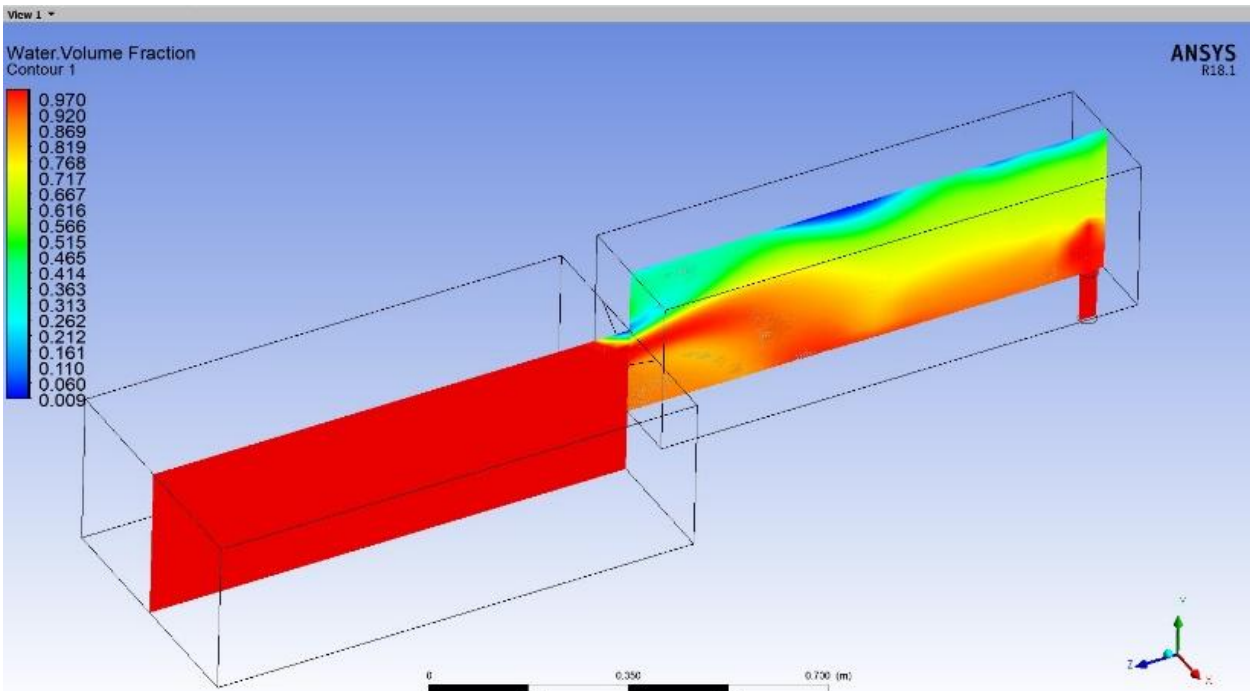

Figure 5: Water Volume Fraction in Simulation

downstream, the water mixes with air, and the volume fraction decreases, showing a clear interface between the two phases. The color gradient from red to blue illustrates this transition. Near the outlet, water settles at the bottom due to gravity, forming a stratified flow. This result demonstrates effective phase separation and flow development within the domain as shown in figure 5.

The figure 6 shows the contour where the water volume fraction is 1, marked along the reference line at parallel to notch level in different flow condition.

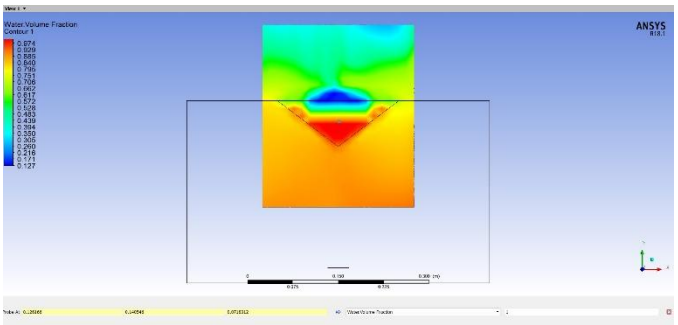

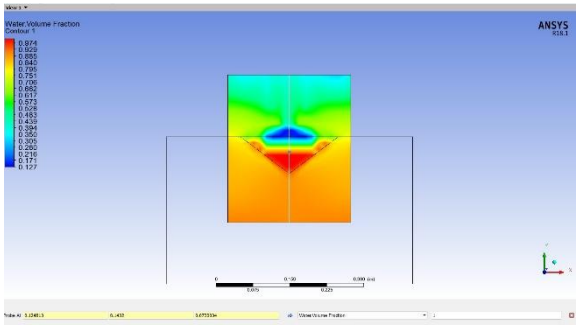

Q= 30cm^3/s Q=60 cm^3/s

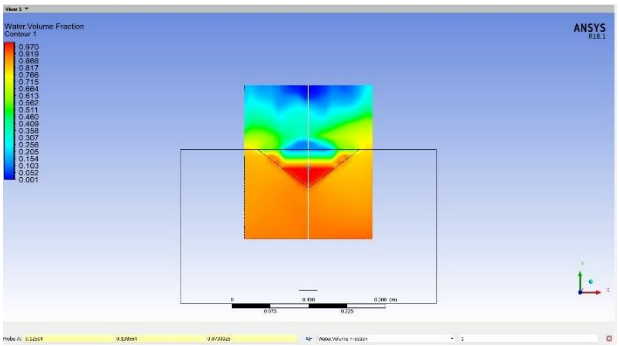

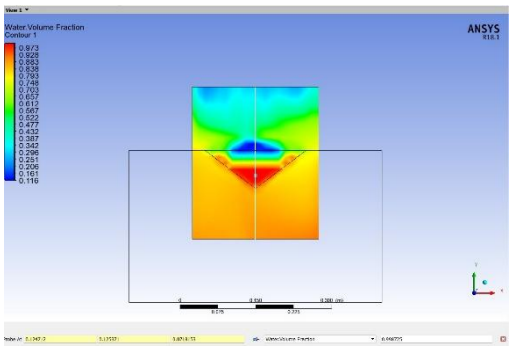

Q= 100cm^3/s Q=8 cm^3/s

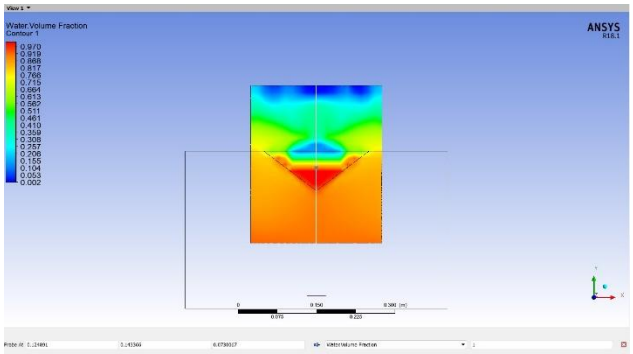

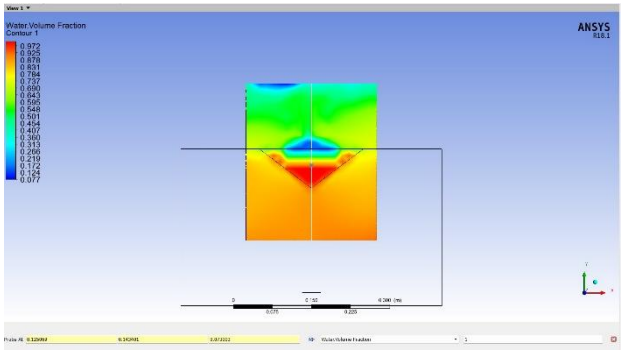

Q= 139.4cm^3/s Q=17.6 cm^3/s

Figure 6: Flow characteristics at different discharge

3.3 Comparison with Literature / Experimental Data

Table 6: Experimental and Simulation Cd Data

S.No.	Source	Average Cd	% Error
1	Experimental	0.8312	—
2	CFD (Simulation)	0.7232	13.00%

Table 7: Experimental and Simulation Data of Literature Review

S.No.	Method	Load h (m)	Notch Angle θ (°)	Cd	Flow Rate Q (L/s)
1	Experimental	0.500	90	0.5902	246
2	CFD	0.499	90	0.5902	245
3	Relative Error (%)	-0.20	—	0.00	-0.30

The table 7 is cited from "Hydraulic analysis of a compound weir simulated with CFD" [2].

In this study, the discharge coefficient (Cd) from CFD simulation was compared with values from experiments and literature for a triangular weir with a 90° notch.

From the literature, the value of Cd was 0.5902 at a water head of 0.5 m and a flow rate of 246 L/s [2]. The CFD result in that study also gave the same Cd, showing almost no difference. This means that CFD can match experimental results very well when conditions are ideal.

In this CFD simulation, the Cd values were different at different flow rates. For example:

- At 30.4 cm^3/s, the CFD Cd was 0.1899, but in our experiment, it was 1.1257, which is a big difference.
- At 60.8 cm^3/s, the CFD value was 0.6635, and experimental was 0.7993. The values are closer here.
- At the highest flow rate (139.2 cm^3/s), CFD gave 1.5046 while the experiment gave 0.8616.

This shows that the simulation does not always exactly match the experiment. The differences may be because of mesh quality, boundary conditions, or how the free surface was modeled in CFD.

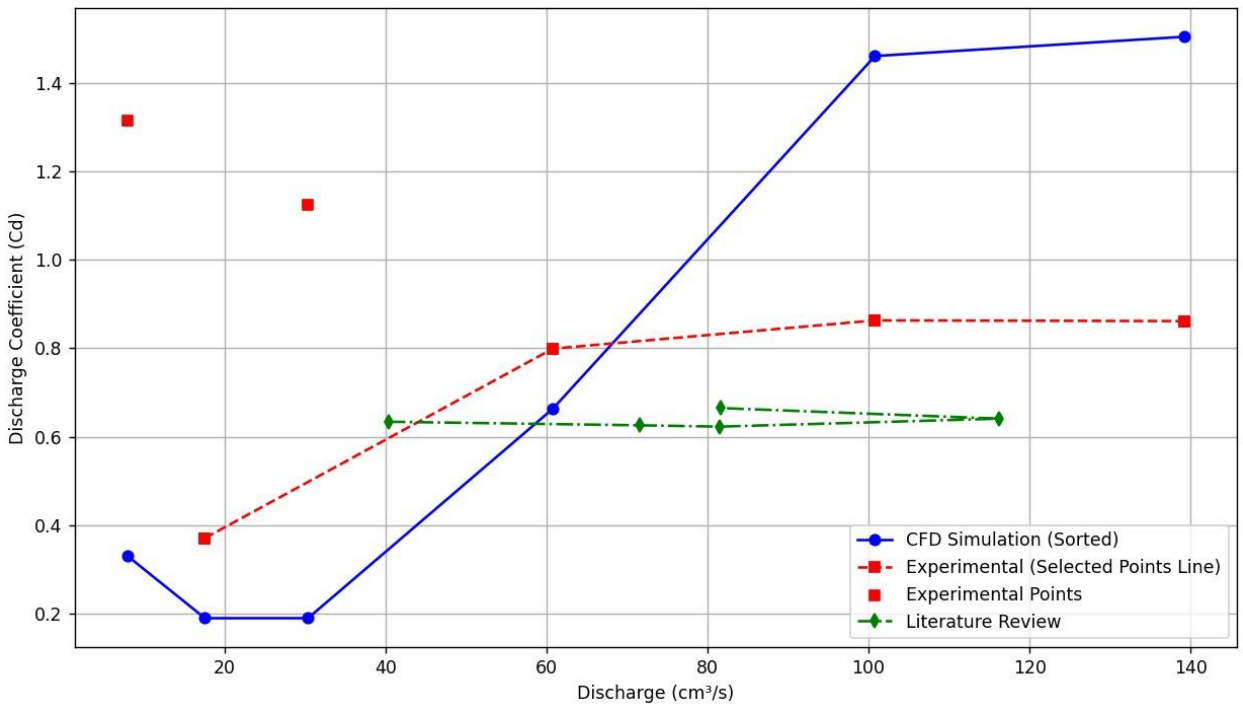

Figure 7: Comparison Graph of Discharge vs Discharge Coefficient

Even though the values are not exactly the same, the overall trend was similar. The Cd increases as the flow rate increases, which is seen in both CFD, experiment and literature CFD. On average, the CFD Cd was 0.723, while the experimental average was 0.831 and from literature 0.5902 [2]. This means the CFD results are fairly close and can be used to understand the flow behavior. In figure 7 the Literature Review data are multiplied by a constant number 5 for all data to make scale equal to this CFD and Experimental data also data are arranged in ascending order to plot.

---

4. Conclusion

In this study, we used CFD to study how water flows over a triangular weir and compared the results with experiment and literature data. The discharge coefficient (Cd) from simulation was close to the experimental results. The average Cd from CFD was 0.7232, and from experiment it was 0.8312, with a 13% error. This means the simulation was fairly accurate this may be cause of some mesh transformation error and insufficient of boundary condition. The simulation also helped to see how water moves in detail, which is hard to observe in real experiments. It gave a better understanding of the flow near the notch. In the future, the results can be improved by using a better mesh, running unsteady simulations, or testing different weir shapes. CFD is a useful tool to study fluid flow without doing many physical tests.

Acknowledgments

I sincerely express my gratitude to Assistant Professor **Dr. Sailesh Chitrakar** for his valuable guidance and support throughout course study on Computational Fluid Dynamics (CFD). His insightful lectures and encouragement have been instrumental in shaping this work. I also extend my appreciation to all researchers and authors whose works have served as crucial references for this report. Their contributions have greatly enriched my understanding of the topic.

References

[1] S. D. A.-Z. Mohammad A. AL-DABBAGH, "Evaluation of Flow behavior over Broad-Crested Weirs of a Triangular Cross-Section using CFD Techniques," *The Eurasia Proceedings of Science,*, vol. Volume 2, pp. 361-367, 2018.

[2] M. I. J. F.-V. Erick Dante Mattos-Villarroel, "Hydraulic analysis of a compound weir (triangular-rectangular) simulated with CFD," *Tecnología y Ciencias del Agua,* 2021.

[3] R. Z. A. Z. a. S. A. M. H. Alhashimi1*, "NUMERICAL SIMULATION OF TWO-PHASE FLOW OVER MANDALI DAM OGEE SPILLWAY," *Int. J. Struct. & Civil Engg. Res.,* vol. 2, p. 3, 2013.

[4] M. R. H. s. Reza Magshoodi, "3D-simulation of flow over submerged weirs," *International Journal of Modelling and Simulation,* pp. 237-243, 2012.

[5] A. Tuna, "Aeration Performance of Triangular-Notch Weirs," *Water And Environmental Journal,* 2001.

Appendix

Code for Mesh Independent Graph Plot

E: > Desktop File > Final Year > CFD > import matplotlib.py > ...

```python
import matplotlib.pyplot as plt

# Example mesh levels and corresponding discharge values (user can replace with actual values)
mesh_levels = ["Coarse", "Medium", "Fine", "Very Fine"]
element_counts = [40000, 64000, 90000, 120000]  # Approximate element count per level
discharge_values = [0.008, 0.0176, 0.0304, 0.1008, 0.1392]  # Example discharge values in m³/s

# Mesh quality descriptions
mesh_info = [
    ("Coarse", "< 25,000", "Low resolution mesh, faster sim"),
    ("Medium", "25,000 - 60,000", "Balanced quality and speed"),
    ("Fine", "60,000 - 120,000", "Higher detail, slower sim"),
    ("Very Fine", "> 120,000", "Very high resolution, slow"),
]

# Print mesh quality table
print(f"{'Mesh Quality':<12} {'Total Nodes Range':<20} {'Description'}")
for level, nodes, desc in mesh_info:
    print(f"{level:<12} {nodes:<20} {desc}")

# Create the graph
plt.figure(figsize=(8, 5))
plt.plot(element_counts, discharge_values[:len(element_counts)], marker='o', linestyle='-', color='blue')
plt.title("Mesh Independence Study: Discharge vs Element Count")
plt.xlabel("Number of Elements")
plt.ylabel("Discharge (m³/s)")
plt.grid(True)
plt.xticks(element_counts)
plt.tight_layout()
plt.show()
```

Contour showing water volume fraction in Triangular Notch

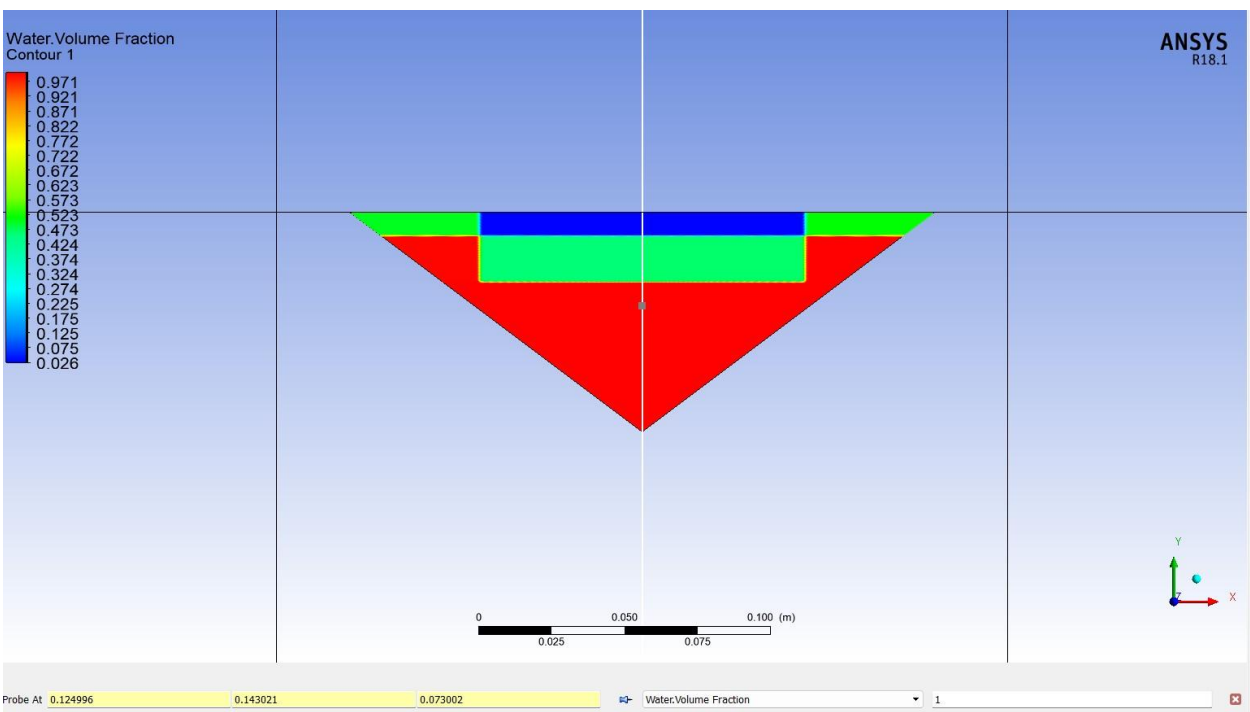
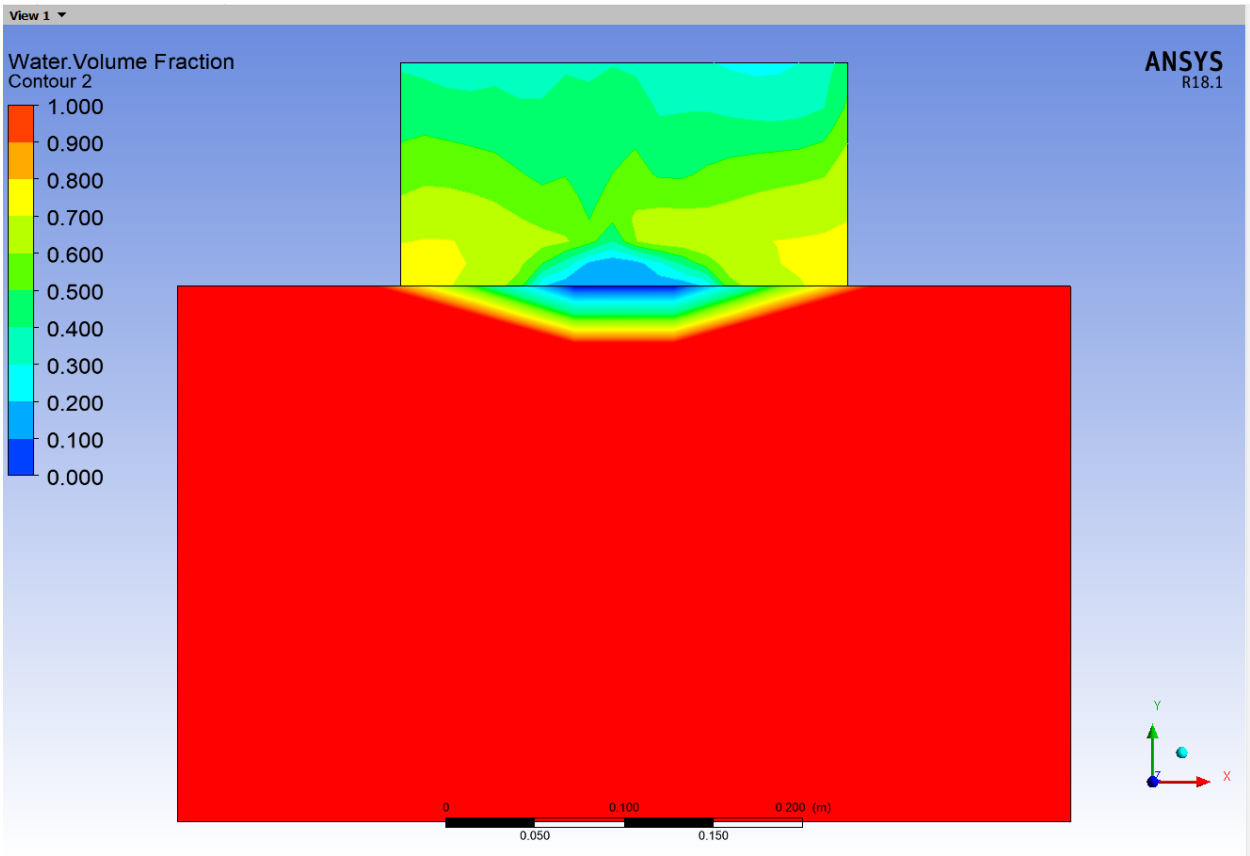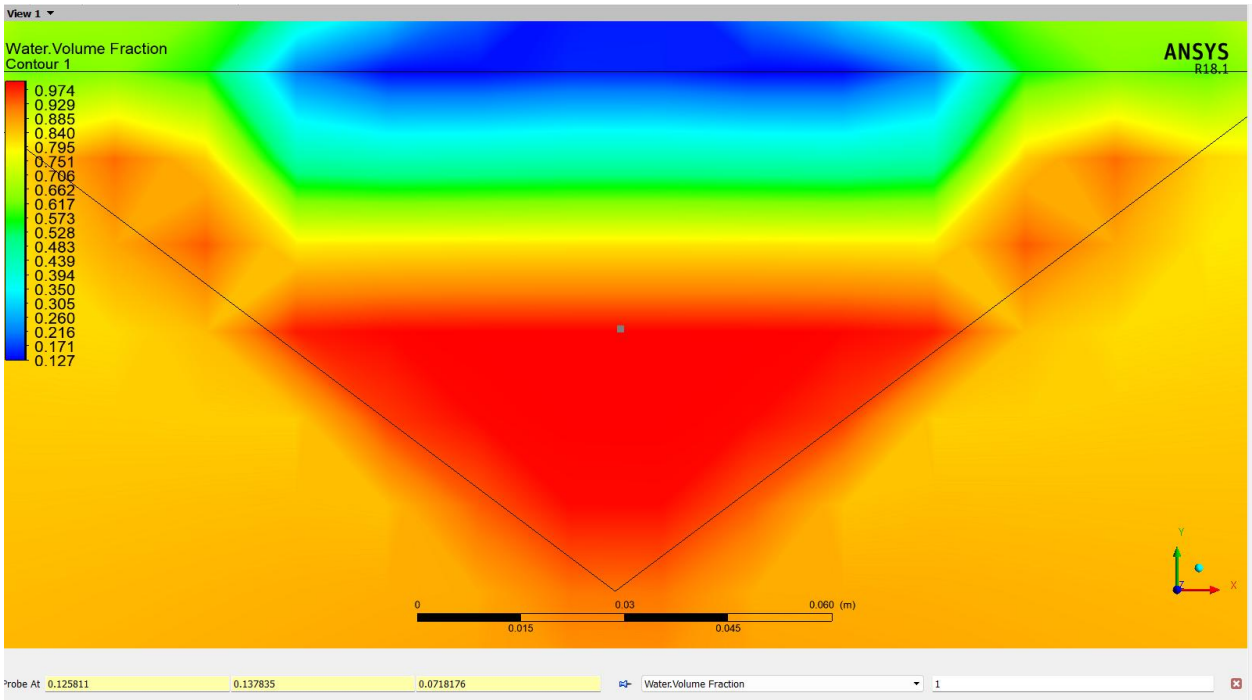
Water Volume Fraction in Triangular Notch