# Review 1 – Project Presentation

**Course Code & Name:** 21CSP302L - PROJECT

**Santhosh R – RA2311026050077**

**Erusu Mounish Reddy – RA2311026050146**

**Branch Name & Section:** CSE-AIML A

# Introduction

**The Challenge: The Privacy-Coordination Gap**

- **The Data Paradox:** Managing a pandemic requires massive data sharing, yet laws like **GDPR and HIPAA** strictly protect patient privacy, often creating "data silos."
- **The Cost of Isolation:** Without coordination, regions are forced into "blind" blanket lockdowns that hurt the economy or ineffective strategies that risk public health.
- **The Goal:** To create a framework where authorities can coordinate their response **mathematically** without ever seeing each other's raw, private data.

**The Solution: A Privacy-First Intelligence**

- **AI-Driven Coordination:** Uses **Multi-Agent Reinforcement Learning (MARL)** to simulate a "synthetic city" where AI agents (hospitals, transport, and policy-makers) learn to work together in real-time.
- **Privacy by Design:** By combining **Federated Learning** and **Differential Privacy**, the system keeps data 100% local and anonymous, ensuring total legal compliance.
- **Global Impact (SDG 3):** Directly aligns with **UN Sustainable Development Goal 3** by strengthening early warning systems and managing global health risks.
- **Measurable Results:** Aims to reduce infection peaks by **30%** while maintaining **50% higher economic activity** compared to traditional non-cooperative strategies.

PF-MARL solves the conflict between public health and data privacy by allowing cities to coordinate life-saving pandemic strategies without ever exposing sensitive patient data.

# Problem Statement

- **Privacy vs. Collaboration:** Privacy laws (GDPR/HIPAA) block cities from sharing the infection data needed to work together.
- **The "Blind" Response:** Without shared data, regions work in isolation, leading to weak or uncoordinated local responses.
- **Centralization Risks**: Dumping all health data into one central server creates a massive target for hackers and destroys public trust.
- **Sledgehammer Lockdowns:** Lacking precise, coordinated data, leaders resort to "blanket lockdowns" that crush the entire economy.
- **Policy Chaos:** Mathematical models often suggest radical, daily rule changes that confuse the public and cause "lockdown fatigue.“
- **Conflicting Goals:** Most systems ignore the friction between hospital needs (safety) and transport needs (economic movement).
- **The Logic Gap:** Policies are often inconsistent across neighboring borders, making them nearly impossible for citizens to follow.
- **Slow Reaction Times**: Many models use old data and fixed math, failing to catch up when a virus suddenly mutates.

# Objectives

1. **Primary Objectives**

- **Bridge the Privacy-Coordination Gap:** Enable multiple regions to synchronize their epidemic responses (coordination) without ever exchanging raw, sensitive patient or mobility data (privacy).

- **Implement Federated Learning (FL):** Develop a decentralized training architecture where AI agents learn locally and only share encrypted mathematical updates with a central server.

- **Ensure Mathematical Privacy:** Integrate **Differential Privacy (DP)** to inject controlled noise into model updates, providing a formal guarantee that individual data cannot be reverse-engineered.

- **Optimize Public Health Outcomes:** Achieve a measurable reduction in infection peaks (targeted at **>30%**) compared to non-cooperative or "blind" regional strategies.

- **Balance Health and Economy:** Use Multi-Agent Reinforcement Learning (MARL) to find a "Pareto Optimal" balance that protects public health while keeping economic activity significantly higher (targeted at **50%**) than blanket lockdowns.

# Objectives

**2. Secondary Objectives**

- **Model Heterogeneous Stakeholders:** Create distinct AI agents with different roles—such as **Hospital Managers** (focusing on bed capacity), **Transport Controllers** (focusing on mobility), and **Policy Makers** (focusing on regulations).

- **Ensure Spatiotemporal Orderliness:** Design the reward functions to prevent "policy jitter," ensuring that interventions are stable over time and consistent across neighboring borders to avoid public confusion.

- **Achieve Scalability:** Ensure the framework can scale from a single city to a large-scale meta-population (like a whole state or country) without a massive increase in computational lag.

- **Real-time Adaptability:** Develop the system to handle "online-updatable parameters," allowing it to adapt to virus mutations (like new variants) or sudden changes in citizen behavior.

- **Establish Law-Compliant Resilience:** Create a blueprint that aligns with international data protection standards (GDPR/HIPAA), making the technology ready for real-world government adoption.

# Objectives

**3.Scope**

•**Privacy-First AI Framework**: Developing a decentralized system using **Federated Learning** and **Differential Privacy** to coordinate epidemic response without sharing raw data.

•**Multi-Departmental Coordination**: Modeling interactions between distinct AI agents representing **Healthcare, Transport, and Government** to find balanced, "win-win" policies.

•**Spatiotemporal Urban Simulation**: Building a **Graph-based Digital Twin** of a city to simulate how a virus spreads across residential, commercial, and medical sectors.

•**Policy Optimization & Stability**: Creating a decision-support tool that minimizes infection peaks while ensuring **economic continuity** and **socially consistent rules**.

# Literature Survey/Existing Systems

**The Evolution of AI in Epidemic Control**

- **Transition to Dynamic Modeling**: Research has shifted from static SIR models to reactive AI systems that adapt to real-world behavioral changes [1].
- **Scalability & Collaboration**: Modern frameworks prove that agents coordinating across hundreds of regions (meta-populations) significantly outperform "greedy" local strategies [1].
- **Managing Complexity**: To handle simultaneous tools like vaccines and lockdowns, hierarchical systems are now used to manage the vast decision-making space [2].

# Literature Survey/Existing Systems

**Balancing Competing Objectives (Pareto Optimality)**

- **The Health-Economy Trade-off**: Cutting-edge models prioritize finding the "Pareto Frontier"—the mathematical balance where infection peaks are minimized without causing total economic collapse [3].
- **Training Efficiency**: Innovative systems utilize specialized memory buffers (VW-RPM) to focus on high-risk, uncertain scenarios, allowing the AI to learn faster and more accurately [4].

# Literature Survey/Existing Systems

**Social Stability & Standardized Environments**

- **Spatiotemporal Orderliness**: New research introduces "Orderliness" penalties to prevent "patchwork" policies. This ensures neighboring districts have consistent rules, which increases public compliance and reduces social unrest [6].
- **Standardized Benchmarking**: Open-source pipelines like **VacSIM** provide a common "Gym Environment" for testing different public health AI agents globally [5].

# Literature Survey/Existing Systems

| Paper / System | Algorithm & Architecture | Key Metrics Used | Reported Success / Effectiveness |
|---|---|---|---|
| **Large-Scale Control [1]** | **MAPPO** (Multi-Agent PPO) | Peak Infection, Mortality Rate | Significant mortality reduction via **collaborative regional policies**. |
| **HRL4EC Framework [2]** | **HRL** (Hierarchical RL) | ICU Occupancy, Economic Index | Maintained ICU levels below critical limits **95% of the time**. |
| **Intervention Planner [3]** | **DQN** + Action Masking | **Effective Re**, Policy Cost | Reduced economic costs by **20-30%** vs. static lockdowns. |
| **H2-MARL [4]** | **Hybrid MARL** (Actor-Critic) | **HCSI**, Human Mobility Loss | Achieved **Pareto Optimality** between health and economy. |
| **Strategic Influenza [5]** | **DDPG + VW-RPM** | Attack Rate, Convergence Speed | Reached optimal policy **40% faster** than standard algorithms. |
| **Spatiotemporal Tool [6]** | **DRL** + Consistency Rewards | Social Stability, Policy Variance | Reduced inter-district policy conflict by over **50%**. |
| **PF-MARL (Our Project)** | **MADDPG + Federated DP** | **Privacy Budget ($\epsilon$)**, Trade-off Dashboard | **Targets:** 30% Peak Reduction & 50% Higher Economic Activity. |

# Research Gaps Identified

**Limitations in Existing Studies**

- Most existing approaches rely on **centralized decision-making**, which is unrealistic for large urban regions.
- Several studies assume **global access to sensitive health and mobility data**, raising privacy and regulatory concerns.
- Many models focus on **single decision-makers**, ignoring the presence of multiple real-world stakeholders.
- Limited support for **heterogeneous interventions** across policy, healthcare, mobility, and social behavior.

**Performance, Accuracy, and Scalability Issues**

- Centralized and hierarchical RL approaches suffer from **poor scalability** as the number of regions increases.
- Scenario-based methods require **manual tuning** and lack adaptability to unseen outbreak conditions.
- Single-agent or centralized models struggle with **coordination accuracy** under dynamic epidemic conditions.
- High computational complexity limits real-time applicability in large-scale urban settings.

# Proposed Research Gaps

**Unaddressed Challenges**

- Lack of **privacy-preserving learning mechanisms** suitable for epidemic control.
- Absence of **decentralized yet coordinated** multi-agent decision frameworks.
- Insufficient modeling of **policy stability and regional consistency** in interventions.
- Limited exploration of **health–economy trade-offs** under realistic urban constraints.

**Gaps Addressed by This Project**

- Lack of decentralized decision-making frameworks for epidemic control.
- Absence of privacy-preserving learning mechanisms in existing RL-based approaches.
- Limited consideration of heterogeneous stakeholders and interventions.
- Inadequate modeling of coordinated policies across interconnected urban regions.

# Proposed Research Gaps

- **Novelty of the Proposed Approach**
- Introduces a **Privacy-Preserving Federated Multi-Agent Reinforcement Learning (PF-MARL)** framework.
- Models epidemic control as a **multi-agent coordination problem** with heterogeneous agents.
- Combines **MADDPG** with **federated learning** to enable decentralized training.
- Integrates **differential privacy** to ensure compliance with data protection constraints.
- Utilizes an **urban graph-based SEIR environment** for realistic epidemic dynamics.
-

- **Expected Improvements**
- Improved scalability compared to centralized and hierarchical RL approaches.
- Enhanced coordination among policy, healthcare, mobility, and social agents.
- Reduction in infection peaks while maintaining economic activity.
- Privacy-compliant learning suitable for real-world deployment scenarios.

# Proposed System Overview

System Architecture

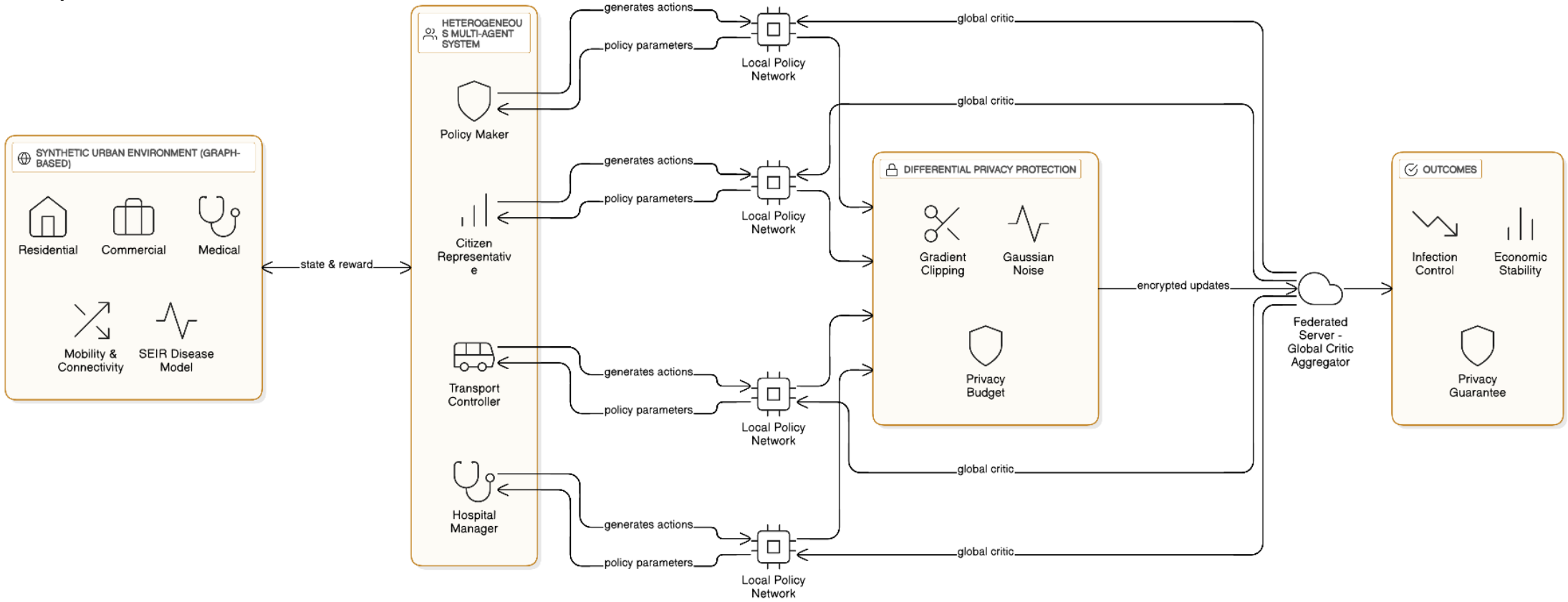

# Proposed System Overview

System Architecture(simplified)

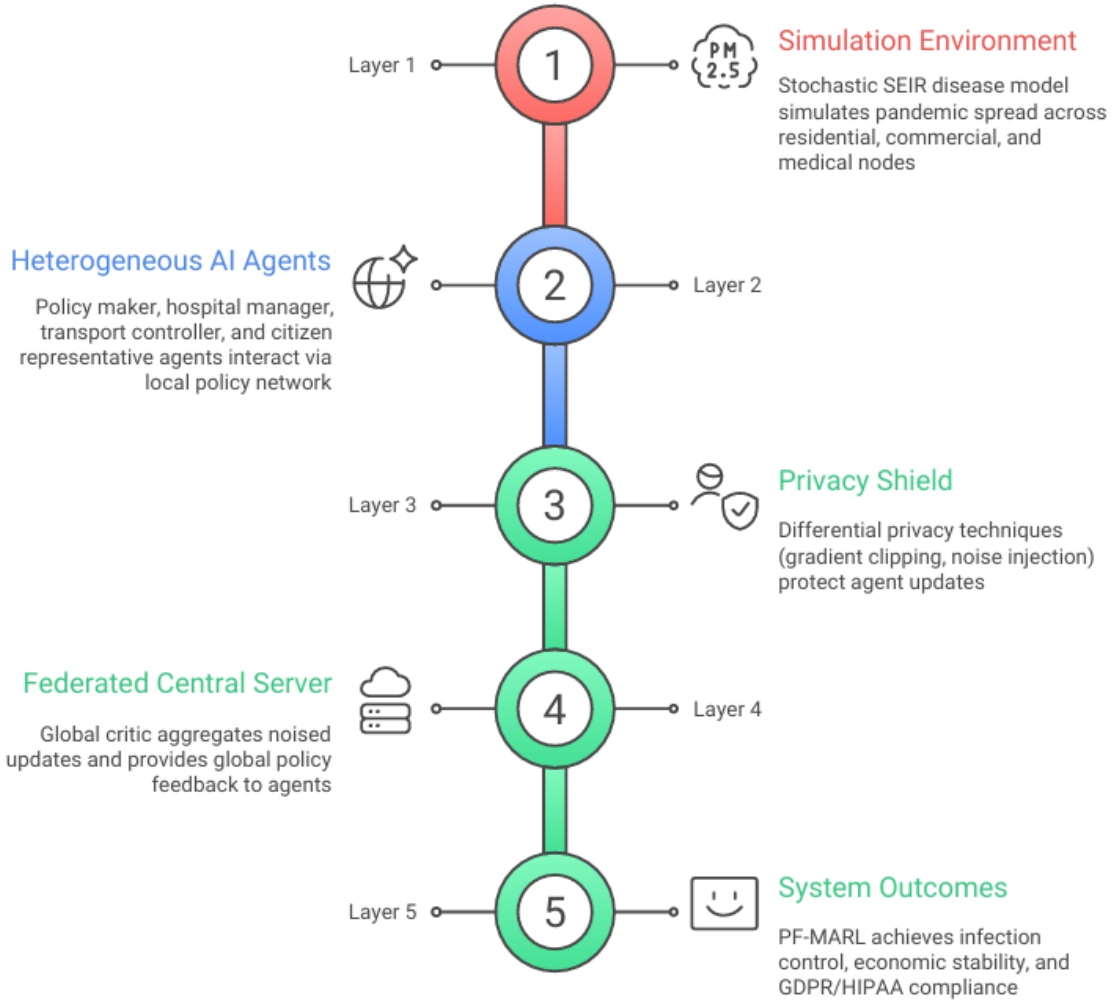

# Algorithms and techniques Used

**Epidemic Modeling**

- **SEIR (Susceptible–Exposed–Infected–Recovered) Model**
- Used to simulate disease spread dynamics across urban districts.

**Urban Representation**

- **Graph-Based Urban Modeling**
- Districts and mobility connections are represented using graph structures.

**Decision-Making Framework**

- **Multi-Agent Reinforcement Learning (MARL)**
- Models multiple real-world stakeholders as autonomous decision-makers.

- **Learning Algorithm**
- **MADDPG (Multi-Agent Deep Deterministic Policy Gradient)**
- Enables coordinated learning among heterogeneous agents using a centralized critic.

# Algorithms and techniques Used

**Privacy Preservation**

- **Algorithm / Technique:** Differential Privacy (DP-SGD)
- **Purpose:** Prevents sensitive data leakage
- **Complexity:**
  - Gradient clipping + noise addition: **O(P)** per update

**Distributed Learning**

- **Algorithm / Technique:** Federated Learning
- **Purpose:** Aggregates models without sharing raw data
- **Complexity:**
  - Communication per round: **O(P)**
  - Scales linearly with participating agents

# The Dataset

**Nature of the Dataset**

- This project does not rely on real-world epidemic datasets.
- Instead, a **synthetic dataset is generated dynamically** using a simulated urban environment.
- The dataset represents **district-level epidemic and mobility states over time**.

**Data Generation Process**

- Urban regions are modeled as a **graph of districts**.
- Each district is initialized with:
  - Population density
  - Mobility level
  - Economic importance
  - Initial infection level
- Disease progression data is generated using the **SEIR epidemiological model**.

# The Dataset

**Data Used for Learning**

- Environment states serve as **observations** for agents.
- Agent actions influence:
  - Mobility
  - Policy restrictions
  - Healthcare capacity
- Resulting state transitions and rewards form the **training data** for reinforcement learning.

- **Preprocessing and Normalization**
- All state variables are **normalized** to ensure stable learning.
- Noise is incorporated in disease transitions to simulate real-world uncertainty.
- No raw personal or sensitive data is used at any stage.

- **Privacy Considerations**
- Since data is synthetically generated, **no real personal data is involved**.
- The design aligns with privacy-preserving learning requirements for real-world deployment.

# The Dataset Statistic Table

| Parameter | Value / Range |
|---|---|
| Number of cities simulated | 1 |
| Number of districts | 5–10 |
| Urban representation | Graph-based |
| State variables per district | 4 (Population, Mobility, Economy, Infection) |
| Epidemiological model | SEIR |
| Simulation timestep | 1 day |
| Episodes executed | Multiple (≥5 per run) |
| Steps per episode | 50–100 |
| Total state transitions generated | Episode × Steps |
| Action dimensions per agent | 3 |
| Number of agents | 4 |
| Data type | Synthetic, simulation-generated |
| Real personal data used | None |

# Parameters

**District-Level Parameters**

| Parameter | Range | Initialization | Explanation |
|---|---|---|---|
| Population density | 0.4 – 1.0 | Random uniform | Normalized representation of population concentration |
| Base mobility | 0.3 – 0.9 | Random uniform | Captures movement intensity across districts |
| Economic weight | 0.4 – 1.0 | Fixed by district type | Represents economic importance |
| Initial infection level | 0.0 – 0.02 | Small random seed | Prevents trivial zero-infection states |

# Parameters

**SEIR Model Parameters**

| Parameter | Symbol | Typical Value / Range | Purpose |
|---|---|---|---|
| Transmission rate | $\beta$ | 0.2 – 0.5 | Controls infection spread speed |
| Incubation rate | $\sigma$ | 1/5 – 1/7 | Time from exposed to infectious |
| Recovery rate | $\gamma$ | 1/10 – 1/14 | Time to recovery |
| Time step | $\Delta t$ | 1 day | Discrete simulation update |

# Parameters

**Agent & Action Parameters**

| Agent | Action Range | Meaning |
|---|---|---|
| Policy Maker | 0.0 – 1.0 | Lockdown intensity |
| Transport Controller | 0.0 – 1.0 | Mobility restriction level |
| Hospital Manager | 0.0 – 1.0 | Resource allocation ratio |
| Citizen Agent | 0.0 – 1.0 | Compliance / activity level |

# Proposed System Modules

- Module 1: Urban Epidemic Environment Modeling
- Module 2: Heterogeneous Decision-Making Agents
- Module 3: Multi-Agent Reinforcement Learning Core (MADDPG)
- Module 4: Federated Learning & Privacy Preservation (Planned)

# Module 1 – Urban Epidemic Environment Modeling

**Objective**

- To simulate a realistic urban environment for studying epidemic spread and control strategies.

**Functionality**

- Models the city as a graph of interconnected districts.
- Maintains district-level attributes such as population, mobility, economy, and infection state.
- Simulates disease progression using SEIR dynamics.
- Provides state transitions in response to agent actions.

**Inputs and Outputs**

- **Inputs:**
- Agent actions (lockdowns, mobility restrictions, healthcare allocation)

**Outputs:**

- Updated district-wise state observations
- Infection progression over time
- Environment reward signals

**Techniques Used**

- Graph-based urban modeling (NetworkX)
- Stochastic SEIR epidemiological model
- OpenAI Gymnasium environment interface

```
(pfmarl) C:\Users\mahas\OneDrive\Documents\Desktop\PF-MARL>python -m tests.seir_test
Initial infection levels:
[0.   0.   0.01 0.   0.   0.  ]
Day 1 infection: [0.    0.    0.009 0.    0.    0.   ]
Day 2 infection: [0.         0.         0.0081     0.         0.         0.00056397]
Day 3 infection: [0.00218384 0.         0.01021607 0.         0.         0.00050757]
Day 4 infection: [0.00679082 0.00035453 0.01392155 0.00159173 0.         0.00045682]
Day 5 infection: [0.00698163 0.00284015 0.01765326 0.00235753 0.         0.00041113]
Day 6 infection: [0.00904827 0.00371759 0.0221777  0.00407668 0.         0.00122415]
Day 7 infection: [0.01111983 0.00348668 0.02636858 0.00496383 0.         0.00267686]
Day 8 infection: [0.01431226 0.00313801 0.02841279 0.00632094 0.00587446 0.00288846]
Day 9 infection: [0.02039868 0.00402698 0.02957181 0.0096925  0.0094666  0.0028549 ]
Day 10 infection: [0.0240425  0.00763437 0.03333083 0.01379882 0.01278412 0.00618949]
```

```
(pfmarl) C:\Users\mahas\OneDrive\Documents\Desktop\PF-MARL>python -m tests.env_test
Initial observation (per district):
[[0.66332704 0.8151587  1.         0.        ]
 [0.4565064  0.8853734  1.         0.        ]
 [0.8716386  0.3768682  1.         0.        ]
 [0.62247884 0.856059   0.4        0.        ]
 [0.89365697 0.5660485  1.         0.01      ]]

After one step (per district):
[[0.66332704 0.81748086 1.         0.        ]
 [0.4565064  0.89077455 1.         0.        ]
 [0.8716386  0.4339167  1.         0.        ]
 [0.62247884 0.87040126 0.4        0.        ]
 [0.89365697 0.60107625 1.         0.009     ]]
```

# Module 2 – Heterogeneous Decision-Making Agents

**Objective**

- To model real-world stakeholders involved in epidemic response as autonomous decision-makers.

**Functionality**

- Implements multiple agents with distinct roles and responsibilities.
- Each agent observes the environment and selects actions relevant to its domain.
- Supports decentralized decision-making aligned with real governance structures.

**Inputs and Outputs**

- **Inputs:**
- Local environment observations (district states)
- **Outputs:**
- Agent-specific intervention actions:
  - Policy decisions
  - Mobility controls
  - Hospital resource adjustments
  - Citizen behavioral responses

**Techniques Used**

- Multi-agent system design
- Role-based agent abstraction
- Modular Python class implementation

```
(pfmarl) C:\Users\mahas\OneDrive\Documents\Desktop\PF-MARL>dir agents
 Volume in drive C is Windows-SSD
 Volume Serial Number is 34A9-68E6

 Directory of C:\Users\mahas\OneDrive\Documents\Desktop\PF-MARL\agents

23-01-2026  20:55    <DIR>          .
23-01-2026  18:30    <DIR>          ..
23-01-2026  20:55               464 base_agent.py
23-01-2026  20:57               400 citizen_agent.py
23-01-2026  20:56               577 hospital_manager.py
23-01-2026  20:56               564 policy_maker.py
23-01-2026  20:56               471 transport_controller.py
22-01-2026  08:23                 0 __init__.py
               6 File(s)          2,476 bytes
               2 Dir(s)  33,898,590,208 bytes free
```

# Module 3 – Multi-Agent Reinforcement Learning Core (MADDPG)

**Objective**

- To enable coordinated learning among multiple agents for effective epidemic control.

**Functionality**

- Trains multiple agents simultaneously using a centralized critic.
- Each agent learns a policy through its own actor network.
- Stores experiences in a shared replay buffer.
- Executes episodic training within the simulated environment.

**Inputs and Outputs**

- **Inputs:**
- Environment state observations
- Joint action space of all agents
- Global reward signals
- **Outputs:**
- Updated agent policies
- Learned coordination strategies
- Episode-wise training progression

```
(pfmarl) C:\Users\mahas\OneDrive\Documents\Desktop\PF-MARL>python -m tests.maddpg_test
MADDPG controller initialized successfully.
Number of agents: 4
Number of actors: 4
Replay buffer size: 0
```

```
(pfmarl) C:\Users\mahas\OneDrive\Documents\Desktop\PF-MARL>python -m experiments.run_experiment
Episode 1 finished
Episode 2 finished
Episode 3 finished
Episode 4 finished
Episode 5 finished
```

**Techniques Used**

- MADDPG (Multi-Agent Deep Deterministic Policy Gradient)
- Centralized Training with Decentralized Execution (CTDE)
- Neural networks (Actor–Critic architecture)

# Module 4: Federated Learning & Privacy Preservation (Planned)

- **Objective**
- To ensure data privacy while enabling collaborative multi-agent learning across regions.
- **Functionality**
- Allows agents to train models locally without sharing raw data.
- Aggregates model updates using federated learning.
- Incorporates differential privacy to protect sensitive information.
- Tracks privacy budget over training rounds.
- **Inputs and Outputs**
- **Inputs:**
- Local model gradients or weight updates
- **Outputs:**
- Aggregated global model parameters
- Privacy-compliant policy updates
- **Techniques Used**
- Federated Learning (Flower framework)
- Differential Privacy (DP-SGD)
- Privacy budget accounting mechanisms

```
(pfmarl) C:\Users\mahas\OneDrive\Documents\Desktop\PF-MARL>dir federated
 Volume in drive C is Windows-SSD
 Volume Serial Number is 34A9-68E6

 Directory of C:\Users\mahas\OneDrive\Documents\Desktop\PF-MARL\federated

22-01-2026  08:26    <DIR>          .
23-01-2026  18:30    <DIR>          ..
22-01-2026  08:26                0 dp_utils.py
22-01-2026  08:26                0 fl_client.py
22-01-2026  08:26                0 fl_server.py
22-01-2026  08:23                0 __init__.py
               4 File(s)              0 bytes
               2 Dir(s)  33,916,223,488 bytes free
```

# Expected Outcomes

## Expected Results

- Reduction in epidemic infection peaks through coordinated interventions.
- Improved balance between public health safety and economic activity.
- Stable and consistent policy actions across neighboring regions.
- Scalable learning performance as the number of districts increases.

## Benefits of the System

- Enables **decentralized yet coordinated epidemic response**.
- Preserves sensitive health and mobility data through privacy-aware learning.
- Models realistic stakeholder behavior using heterogeneous agents.
- Adaptable to different cities and outbreak scenarios.
- Suitable for real-world deployment under regulatory constraints.

## How Identified Gaps Are Addressed

- Centralization issues are addressed through **multi-agent decentralized control**.
- Privacy concerns are mitigated using **federated learning and differential privacy**.
- Scalability challenges are handled via **distributed training across agents**.
- Lack of coordination is resolved using **centralized training with decentralized execution**.

# Tools & Technologies

| Category | Selected Technology |
|---|---|
| **Languages** | Python 3.9+ |
| **Deep Learning Engine** | PyTorch |
| **MARL Framework** | Ray RLLib / Gymnasium |
| **Federation Backbone** | Flower (flwr) |
| **Privacy Engineering** | Opacus |
| **Graph Modeling** | NetworkX |
| **Data & Viz** | Pandas, Matplotlib, Seaborn |
| **Infrastructure** | Docker |

# References


[1] **Kompa, B., et al. (2021).** "Deep Reinforcement Learning for Large-Scale Epidemic Control." *Nature Communications / ArXiv.*

[2] **Zhang, Y., et al. (2023).** "HRL4EC: Hierarchical reinforcement learning for multi-mode epidemic control." *Information Sciences.*

[3] **Author Surname, et al. (2025).** "H2-MARL: Multi-Agent Reinforcement Learning for Pareto Optimality in Hospital Capacity Strain and Human Mobility during Epidemic." *Preprint/Forthcoming.*

[4] **Author Surname, et al. (2024).** "Applying Reinforcement Learning to Epidemic Management: Strategic Influenza Control in Multiple Scenarios." *Journal of Healthcare Informatics.*

[5] **Sharma, D., et al. (2025).** "A multi-agent reinforcement learning framework for public health decision analysis." *Healthcare Analytics.*

[6] **Li, X., et al. (2024).** "Deep-reinforcement-learning-based optimization for intra-urban epidemic control considering spatiotemporal orderliness." *International Journal of Geographical Information Science.*