Project structure and code snippets

- ERD Diagram
- Flow Chart
- Architecture
- Code snippets
- UI / UX

- database population
- report model
- report serializer
- report view
- invoice generation
- Zustand fetcher component

ERD Diagram

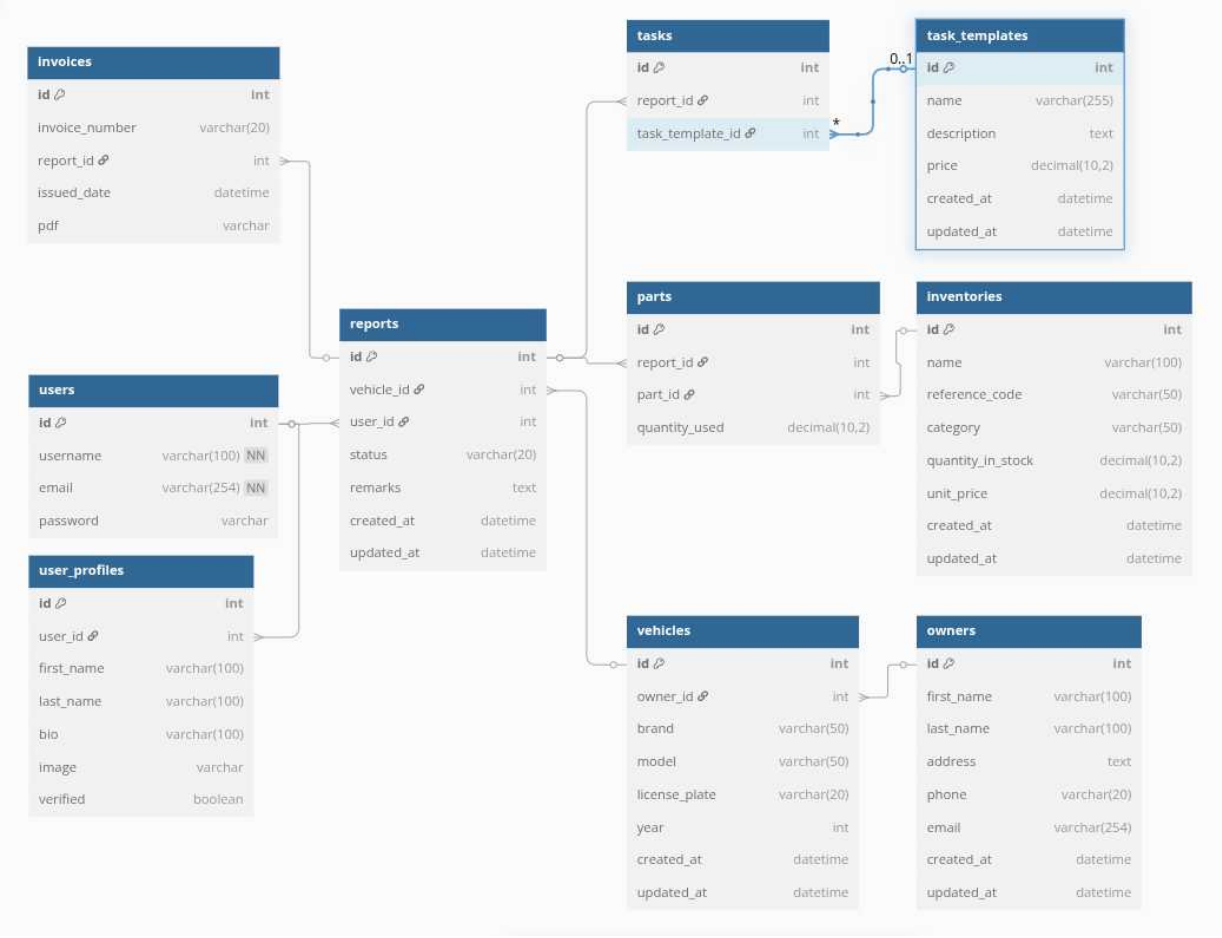
invoices
id int
invoice_number varchar(20)
report_id int
issued_date datetime
pdf varchar
tasks
id int
report_id int
task_template_id int
0..1
*
task_templates
id int
name varchar(255)
description text
price decimal(10,2)
created_at datetime
updated_at datetime
reports
id int
vehicle_id int
user_id int
status varchar(20)
remarks text
created_at datetime
updated_at datetime
parts
id int
report_id int
part_id int
quantity_used decimal(10,2)
inventories
id int
name varchar(100)
reference_code varchar(50)
category varchar(50)
quantity_in_stock decimal(10,2)
unit_price decimal(10,2)
created_at datetime
updated_at datetime
users
id int
username varchar(100) NN
email varchar(254) NN
password varchar
user_profiles
id int
user_id int
first_name varchar(100)
last_name varchar(100)
bio varchar(100)
image varchar
verified boolean
vehicles
id int
owner_id int
brand varchar(50)
model varchar(50)
license_plate varchar(20)
year int
created_at datetime
updated_at datetime
owners
id int
first_name varchar(100)
last_name varchar(100)
address text
phone varchar(20)
email varchar(254)
created_at datetime
updated_at datetime

Flow Chart

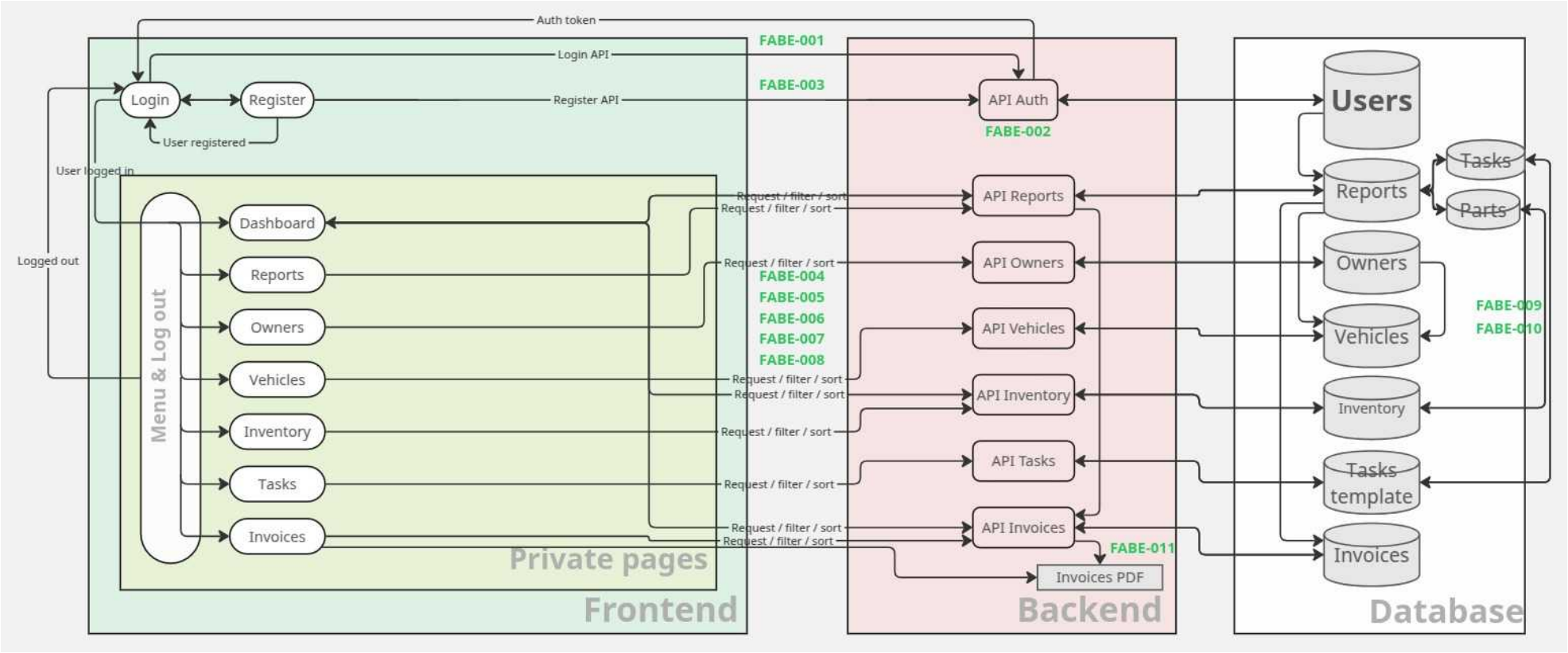
Auth token
Login API
Register API
User registered
User logged in
Logged out
Login
Register
Menu & Log out
Dashboard
Reports
Owners
Vehicles
Inventory
Tasks
Invoices
Private pages
Frontend
FABE-001
FABE-003
FABE-002
FABE-004
FABE-005
FABE-006
FABE-007
FABE-008
FABE-009
FABE-010
FABE-011
Request / filter / sort
API Auth
API Reports
API Owners
API Vehicles
API Inventory
API Tasks
API Invoices
Invoices PDF
Backend
Users
Reports
Owners
Vehicles
Inventory
Tasks template
Invoices
Tasks
Parts
Database

Architecture

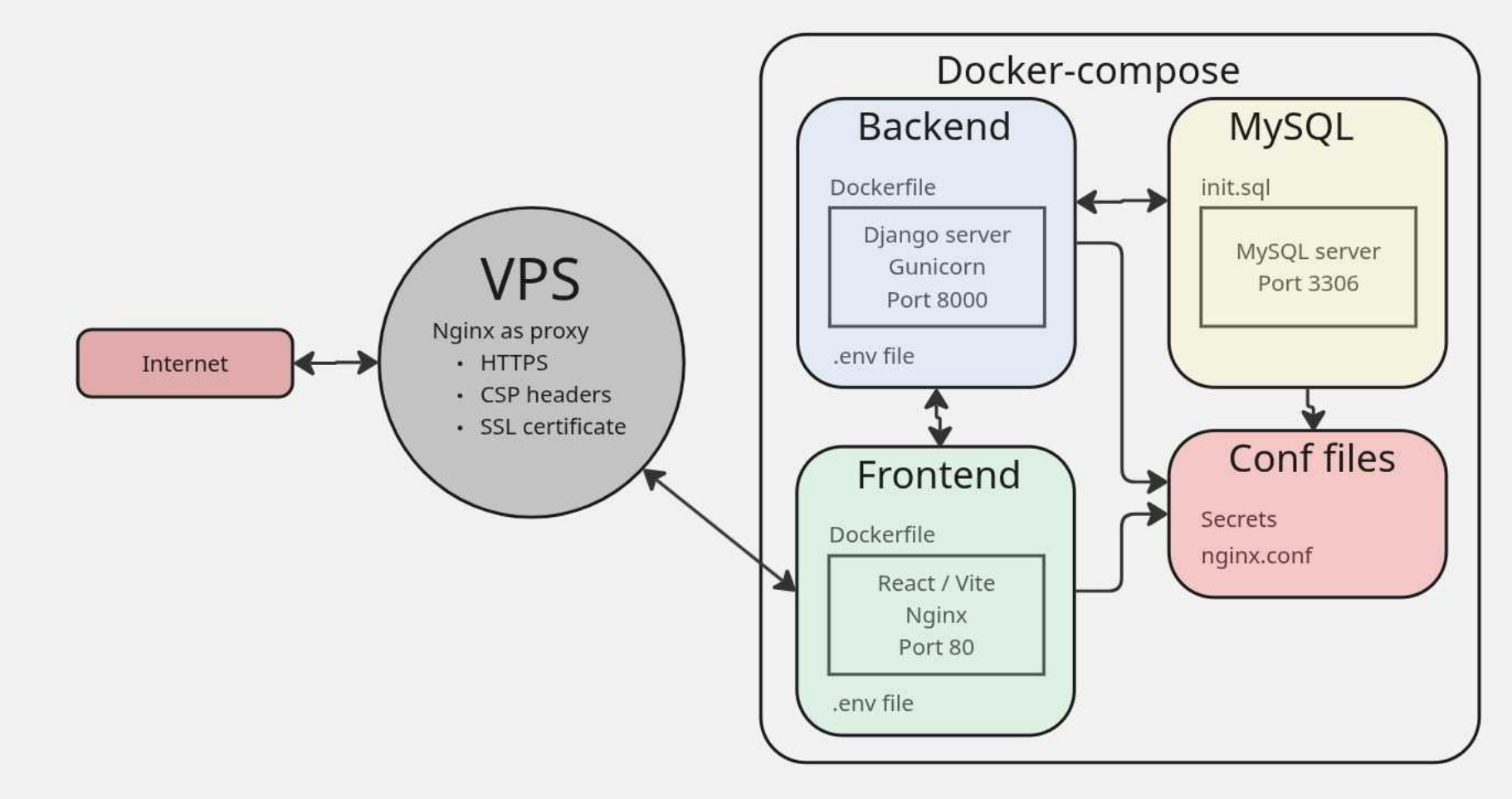

Populate DB snippet

```python
def populate_reports(users, vehicles):
    if not Inventory.objects.exists():
        populate_inventory()
    if not TaskTemplate.objects.exists():
        populate_task_templates()

    if Report.objects.count() > 8:
        print("Reports already populated.")
        return Report.objects.all()

    for vehicle in vehicles:
        report = Report.objects.create(
            vehicle=vehicle,
            user=random.choice(users),
            remarks=fake.sentence(),
            status=fake.random_element(['pending', 'completed', 'in_progress']),
            created_at=fake.date_time()
        )

        # Add 1 to 3 tasks to the report
        tasks = TaskTemplate.objects.order_by('?')[:random.randint(1, 3)]
        for task_template in tasks:
            Task.objects.create(report=report, task_template=task_template)

        # Add 0 to 3 parts to the report
        parts = Inventory.objects.order_by('?')[:random.randint(0, 3)]
        for part in parts:
            if part.quantity_in_stock > 5:
                Part.objects.create(report=report, part=part, quantity_used=random.randint(1, 5))

        print(f'Created report for vehicle {vehicle.license_plate}')
```

Model snippet

```python
# ---------- REPORT & TASKS ------------
class Report(models.Model):
    """
    Inspection or service report associated with a vehicle and a user.

    Tracks the status of vehicle inspection and repair tasks.
    """
    STATUS_CHOICES = [
        ('pending', 'Pending'),
        ('in_progress', 'In Progress'),
        ('completed', 'Completed'),
        ('exported', 'Exported')
    ]

    vehicle = models.ForeignKey(Vehicle, on_delete=models.CASCADE)
    user = models.ForeignKey(User, on_delete=models.SET_NULL, null=True)
    status = models.CharField(max_length=20, choices=STATUS_CHOICES)
    remarks = models.TextField(blank=True, null=True)
    created_at = models.DateTimeField(auto_now_add=True)
    updated_at = models.DateTimeField(auto_now=True)

    def __str__(self):
        return f"Report number {self.id} for {self.vehicle} - {self.status}"

    def get_status_display(self):
        """Returns the user-readable status."""
        return dict(self.STATUS_CHOICES).get(self.status, self.status)

    def delete(self, *args, **kwargs):
        """
        On delete, cascade and restore inventory quantities
        from related parts.
        """
        for part in self.part_set.all():
            part.delete()
        super().delete(*args, **kwargs)
```

Serializer snippet

```python
def create(self, validated_data):
    """
    Creates a report and its associated tasks and parts.
    """
    tasks = validated_data.pop('tasks', [])
    parts = validated_data.pop('parts', [])

    report = Report.objects.create(**validated_data)

    Task.objects.bulk_create([
        Task(report=report, task_template_id=task_id) for task_id in tasks
    ])

    # Create parts one by one to trigger inventory logic
    for part_data in parts:
        Part.objects.create(
            report=r (variable) part_data: Any
            part_id=part_data["part"],
            quantity_used=Decimal(part_data["quantity_used"])
        )

    return report
```

View snippet

```python
class ReportViewSet(viewsets.ModelViewSet):    "viewsets": Unknown word.
    API endpoint for managing maintenance reports.

    Includes logic for pagination, filtering, ordering, and concurrency control.
    Exposes related tasks and parts.
    """
    queryset = Report.objects.select_related('vehicle').all()
    serializer_class = ReportSerializer
    permission_classes = [permissions.IsAuthenticated]

    # disable Pagination
    pagination_class = None

    # To set up filters from the backend side
    filter_backends = [DjangoFilterBackend, filters.OrderingFilter]
    filterset_fields = {    "filterset": Unknown word.
        'status': ['exact', 'in'],
        'vehicle__brand': ['exact'],
        'vehicle__owner': ['exact'],
    }
    ordering_fields = ['vehicle__brand', 'vehicle__model', 'created_at', 'updated_at', 'status']

    def list(self, request, *args, **kwargs):
        limit = request.query_params.get("limit")
        offset = request.query_params.get("offset")
        ordering = request.query_params.get("ordering", "vehicle__brand,vehicle__model")

        queryset = self.filter_queryset(self.get_queryset()).order_by(*ordering.split(","))

        if limit or offset:
            self.pagination_class = CustomPagination
            paginator = self.pagination_class()
            paginated_queryset = paginator.paginate_queryset(queryset, request)
            return paginator.get_paginated_response(self.get_serializer(paginated_queryset, many=True)

        # If no pagination params are set, return all results
        return Response(self.get_serializer(queryset, many=True).data)

    def update(self, request, *args, **kwargs):
        """Allow partial updates while keeping existing values for missing fields."""
        partial = kwargs.pop('partial', False)
        instance = self.get_object()
```

Helper function snippet

```python
def generate_invoice(self, report, request):
    """Create an invoice and generate a PDF for an exported report."""
    invoice_number = f"INV-{report.id:06d}"

    # Create an Invoice entry
    invoice = Invoice.objects.create(
        invoice_number=invoice_number,
        report=report
    )

    # Generate invoice PDF and calculate the total cost with VAT
    html_content = self.generate_invoice_pdf(invoice)      You, 1 second ago • Uncommitted changes

    invoice.save()

    pdf_file = HTML(string=html_content, base_url=request.build_absolute_uri()).write_pdf()

    # Save the PDF to the invoice model
    invoice.pdf.save(f"invoices/invoice_{invoice_number}.pdf", ContentFile(pdf_file), save=True)

    return Response({"message": "Invoice generated successfully", "invoice_id": invoice.id})

def generate_invoice_pdf(self, invoice):
    """Generate and return a PDF file for the invoice."""
    tasks = Task.objects.filter(report=invoice.report)
    parts = Part.objects.filter(report=invoice.report)
    # Join task with task template and part with inventory
    tasks = tasks.select_related('task_template')
    parts = parts.select_related('part')
```

Store snippet

```
const REPORT_API_URL = import.meta.env.VITE_API_URL + '/reports/'

const useReportStore = create((set) => ({
  reports: [],
  pagination: null,
  loading: false,
  error: null,

  fetchReports: async (params = {}) => {
    set({ loading: true })
    try {
      const cleanParams = Object.fromEntries(Object.entries(params).filter(([_, v]) => v != null))
      const queryParams = new URLSearchParams(cleanParams)      You, last month • Zustand
      if (params.ordering) queryParams.append('ordering', params.ordering)

      const response = await axiosInstance.get(`${REPORT_API_URL}?${queryParams}`)

      const isPaginated = 'results' in response.data
      const results = isPaginated ? response.data.results : response.data
      const pagination = isPaginated
        ? { count: response.data.count, next: response.data.next, previous: response.data.previous }
        : null

      set({
        reports: results,
        pagination,
        loading: false,
      })
    } catch (error) {
      set({ error: error.message, loading: false })
    }
  },
```

User Interface