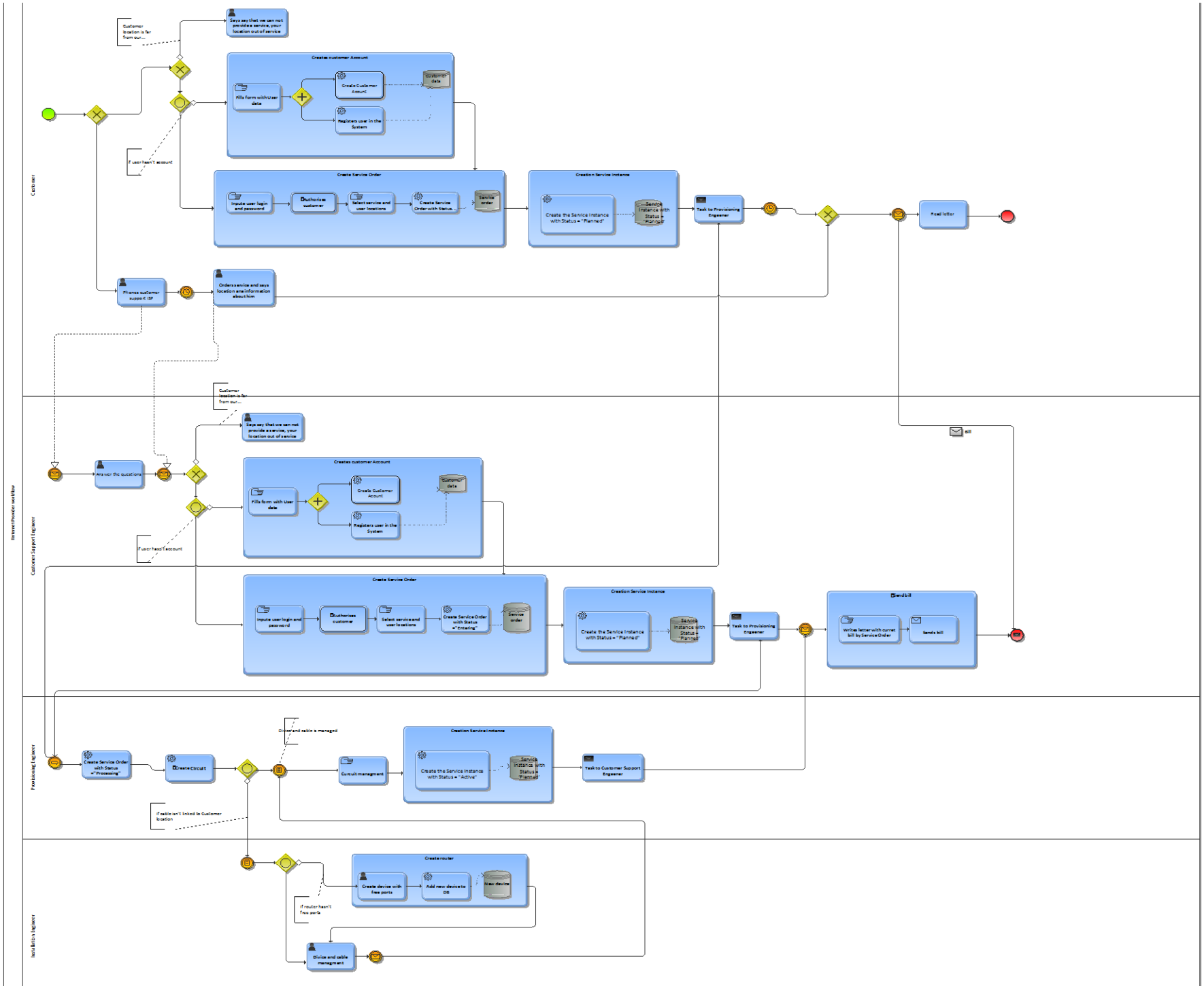
Internet Provider workflow
Customer
Customer Support Engineer
Provisioning Engineer
Installation Engineer
Customer location is far from our...
Says say that we can not provide a service, your location out of service
Creates customer Account
Fills form with User data
Create Customer Acount
Registers user in the System
Customer data
If user hasn't account
Create Service Order
Inputs user login and password
Authorises customer
Select service and user locations
Create Service Order with Status...
Service order
Creation Service Instance
Create the Service Instance with Status = "Planned"
Service Instance with Status = "Planned"
Task to Provisioning Engeneer
Final letter
Phones customer support SP
Orders service and says location are information about him
Answer the questions
Create Service Order with Status = "Entering"
Send bill
Writes letter with curret bill by Service Order
Sends bill
Bill
Create Service Order with Status = "Processing"
Create Circuit
Device and cable is managed
Cuircuit managment
Create the Service Instance with Status = "Active"
Task to Customer Support Engeneer
If cable isn't linked to Customer location
Create router
Create device with free ports
Add new device to DB
New device
If router hasn't free ports
Device and cable managment