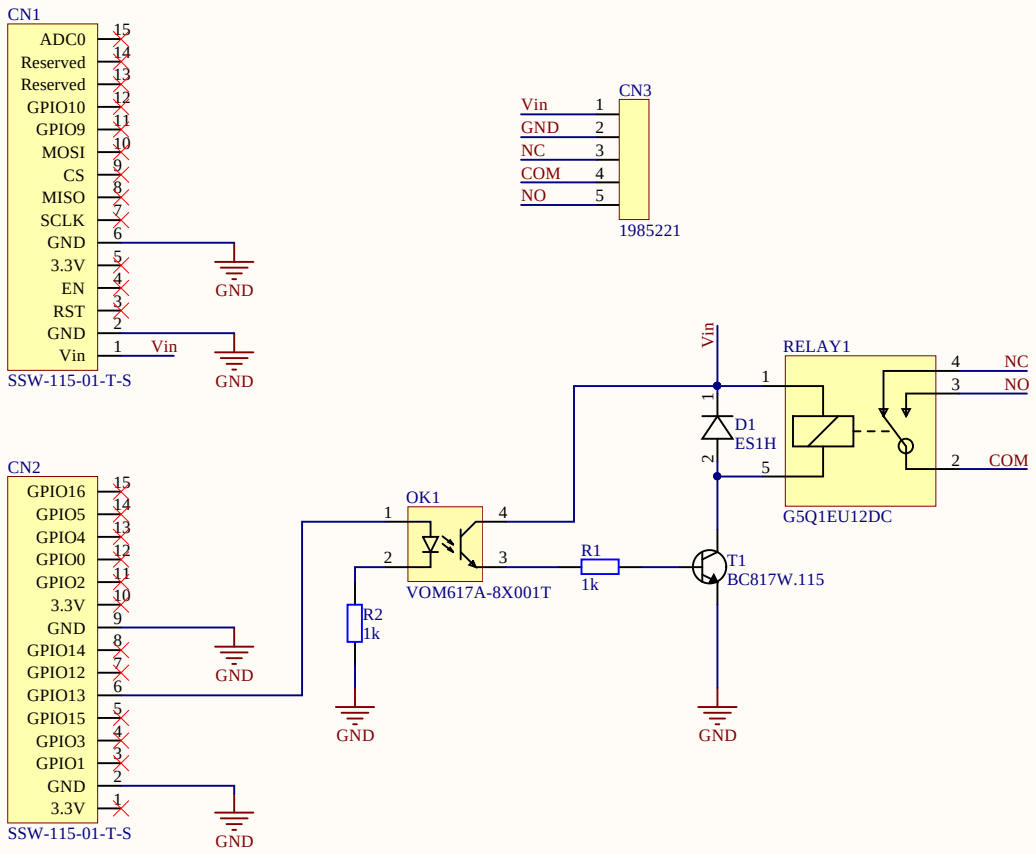

Title WiFi car pump steering		
Size A4	Number	Revision v1
Date: 2019-10-28		Sheet of
File: C:\Users\..\Schemat.SchDoc		Drawn By: