Further Evaluation and Calibration of a Mie Scattering-based Apparatus for Portable Optical Haematological Analysis

Asterios Bantis[1], Maro Michailidou[2], and Anna Dziuba[3]

Dept. of Industrial Engineering & Management, International Hellenic University, Greece[1],
Dept. of Electrical & Computer Engineering, Aristotle University of Thessaloniki, Greece[2],
Faculty of Computing and Telecommunications, Poznań University of Technology, Poland[3]

2023-12-20

Contents

1. Introduction
2. Data Analysis
3. Conclusions and Future Plans
4. References

General Information

- **Proof of Concept** (C. Iosifidis, K. Katsaliaki, P. Kollensperger, M. E. Kiziroglou, *Design of an embedded sensor system for measuring laser scattering on blood cells*, 2017)
- **Software development for the 1st sensor** (E. Gkagkanis, *Fabrication of a photo-diode sensor apparatus with the Beaglebone microcomputer for use in non-invasive biomedical sensors*, ATEITh, 2019)
- **Development and evaluation of the 1st prototype of the device** (K. Karakostas, *Portable system development for Mie scattering analysis, to determine the size of blood cells in in-vivo and in-vitro studies*, AUTh, 2019)
- **PCB design for a new sensor** (I. Kavoukis, *Implementation of photodiode arrays for scattering analysis in portable biomedical sensors*, IHU, 2020)
- **Hardware and software development; design and fabrication of a 2nd prototype, evaluations...** (M. Michailidou, A. Bantis, *Scattering measurements with the Beaglebone microcomputer for portable biomedical sensors*, IHU, 2022)
- **Further analysis and evaluation** (A. Bantis, M. Michailidou, A. Dziuba, *Further Evaluation and Calibration of a Mie Scattering-based Apparatus for Portable Optical Haematological Analysis*, WoM2023)

Purpose of this paper

- Further evaluate the project's previous conclusions *(noticed the pattern?)*
- Utilise (more) advanced methods for statistical analysis
- Experiment with the creation of "indicators" using the above
- Further automate the analysis procedure
- Investigate the feasibility of automatic data classification

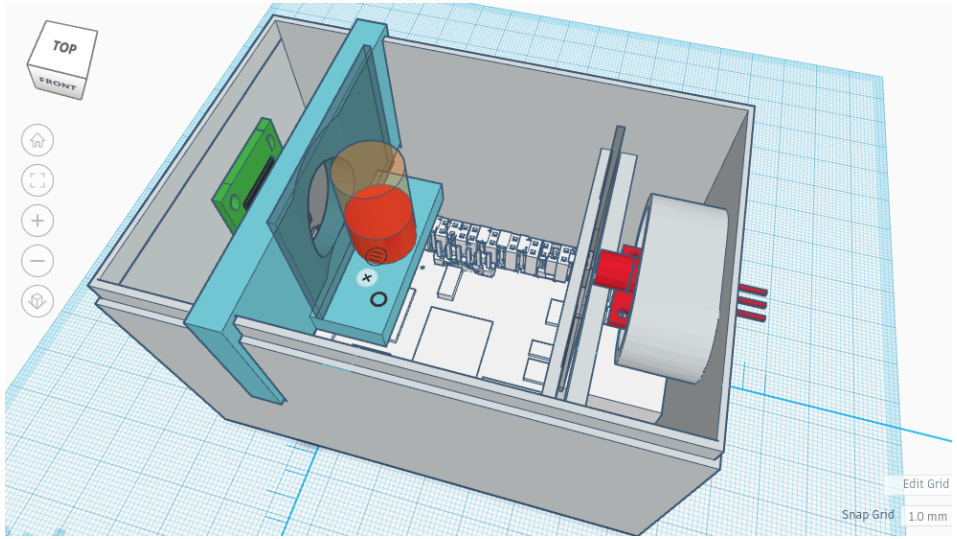

What does this device actually do?

- SApPHO[1] utilises Mie scattering to detect particles (primarily 1 μm to 15 μm) either suspended in liquids, either in-vitro (e.g. blood sample) or in-vitro
- The basic components of such a device are a laser pointer, a microcomputer, a photodiode array (PDA) of N×1 elements, and the circuit boards required for interfacing the sensor with the microcomputer.
- Any optically-interfering object will produce a Mie scattering (brightness) pattern that will in turn be detected by the PDA
- Different particle sizes and/or shapes produce a different scattering pattern

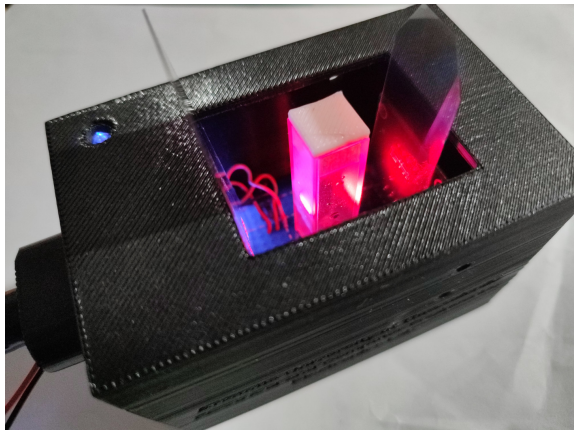

[1] **S**cattering-based **Ap**paratus for **P**ortable **H**aematological analysis via **O**ptics

Hardware

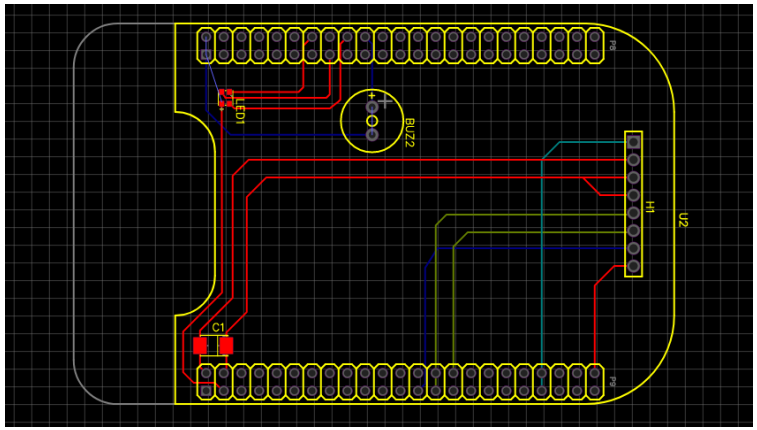

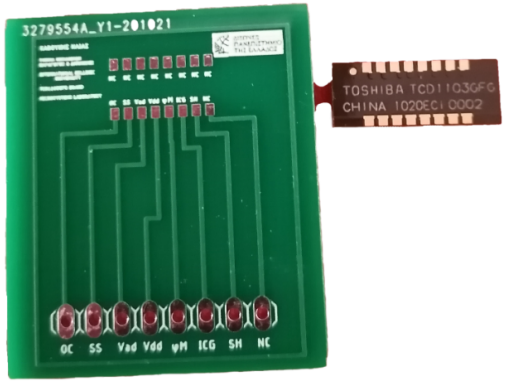

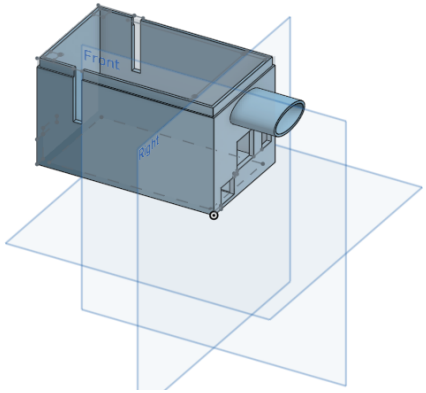

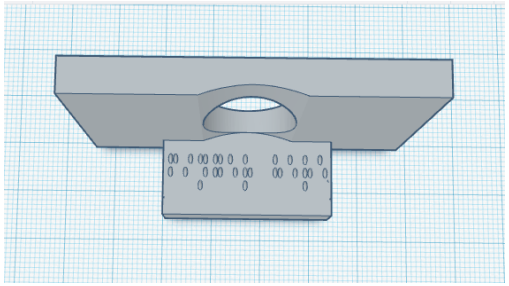

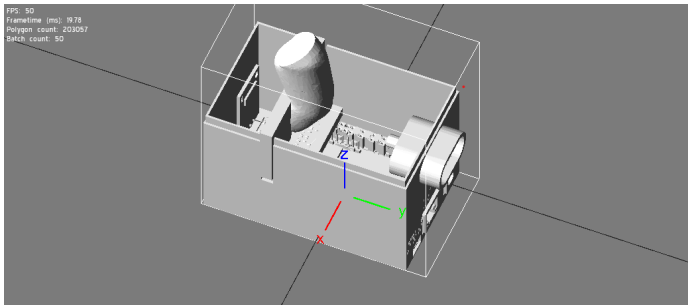

Compliance: IEC 60601-1-2, RoHS (PCBs); ISO 10993-1, ISO 180:2000 (Case)

Examples of biomedical applications

Medical condition	**Element examined**	**Diameter (μm)**
Parasitaemia	Parasites (post-staining)	$\sim$10
Leucopenia	Leucocytes	12-15
Leucocytosis	Leucocytes	12-15
Crystalluria	Urinary crystals	4.2-19.8
Non-apparent haematuria	Red blood cells	7-8
Sperm-related infertility	Sperm cells	2.5-3
Macrocytic anaemia	Red blood cells	7-8
Anisocytosis	Red blood cells	7-8

GitHub

Sappho-Project

Overview | Repositories 7 | Projects | Packages | Teams | People 3 | Settings

Type / to search

The Sappho Project

1 follower · Greece

Follow

README.md

S.AP.P.H.O. Project

Scattering-based APparatus for Portable Haematological analysis via Optics

Information

This repository is the main repository for the SAPPHO project. The design, fabrication, calibration, and testing of a non-invasive, portable Mie scattering-based blood quality sensor are presented in this project. The prototype device currently consists of a 1500x1-pixel photodiode array sensor, a 650 nm laser diode, and a novel case designed to facilitate a variety of optical experiments. Furthermore, this project presents the findings of several in-vivo and in-vitro experiments performed with either the current device or previous prototypes of the device. The SAPPHO project began with our thesis (Scattering measurements with the Beaglebone microcomputer for portable biomedical sensors), but its roots can be traced back to the work of Stratos Gkagkanis (`@StratosGK`), Konstantinos Karakostas (`@konkarak`), Ilias Kavoukis (`@illaskavoukis`), and Dr. Michail E. Kiziroglou (`@m.kiziroglou`).

Directories

- `./debian-mirror`
  - In case the official Beagleboard website stops distributing the Debian image (`bone-debian-8.7-iot-armhf-2017-03-19-4gb.img.xz`) used in our thesis, this directory contains links to mirrors.
- `./sappho-analysis`
  - The `sappho-analysis` directory contains scripts for analyzing samples taken with the Toshiba TCD1103GFG PDA or the AMS TSL1401CL PDA.
- `./sappho-cad`
  - This directory houses `.stl` files for the 3D-printed case as well as other peripherals.
- `./sappho-docs`
  - The `sappho-docs` directory contains pdf documents such as our thesis and its presentation, our publications, and the TeX source code for some legal documents required for the project.
- `./sappho-pcb`
  - The directory `sappho-pcb` contains the files required for printing and/or editing the project's PCB
- `./sappho-pda`
  - This directory contains the source code required for using the Toshiba TCD1103GFG PDA sensor in conjunction with the Beaglebone Black Rev. C microcomputer, as well as some installation scripts. This code has been forked from StratosGK's "SGK_PDA" driver for the AMS TSL1401CL PDA. Please copy this directory under the directory `/home/debian/`.

Installation & Building

Beaglebone Black Rev. C

View as: Public

You are viewing the README and pinned repositories as a public user.

You can hide the tasks we've suggested on this page and bring them back later.

Discussions

Set up discussions to engage with your community!

Turn on discussions

Repositories

sappho-analysis — Python 0 Updated on Nov 12

sappho-pda-beaglebone — C 0 Updated on Oct 22

.github — 0 Updated on Oct 22

sappho-pcb — ANTLR 0 Updated on Oct 22

sappho-docs — 0 Updated on Oct 22

View all repositories

Create new repository | Import

People

Invite someone

BASH THE BOURNE-AGAIN SHELL

Google Sheets

[● ◀] systemd

GitHub

Sappho-Project

Type / to search

Overview | Repositories 7 | Projects | Packages | Teams | People 3 | Settings

The Sappho Project

1 follower · Greece

Follow

README.md

S.AP.P.H.O. Project

Scattering-based APparatus for Portable Haematological analysis via Optics

Information

This repository is the main repository for the SAPPHO project. The design, fabrication, calibration, and testing of a non-invasive, portable Mie scattering-based blood quality sensor are presented in this project. The prototype device currently consists of a 1500x1-pixel photodiode array sensor, a 650 nm laser diode, and a novel case designed to facilitate a variety of optical experiments. Furthermore, this project presents the findings of several in-vivo and in-vitro experiments performed with either the current device or previous prototypes of the device. The SAPPHO project began with our thesis (Scattering measurements with the Beaglebone microcomputer for portable biomedical sensors), but its roots can be traced back to the work of Stratos Gkagkanis (`@StratosGK`), Konstantinos Karakostas (`@konkarak`), Ilias Kavoukis (`@illaskavoukis`), and Dr. Michail E. Kiziroglou (`@m.kiziroglou`).

Directories

- `./debian-mirror`
  - In case the official Beagleboard website stops distributing the Debian image (`bone-debian-8.7-iot-armhf-2017-03-19-4gb.img.xz`) used in our thesis, this directory contains links to mirrors.
- `./sappho-analysis`
  - The `sappho-analysis` directory contains scripts for analyzing samples taken with the Toshiba TCD1103GFG PDA or the AMS TSL1401CL PDA.
- `./sappho-cad`
  - This directory houses `.stl` files for the 3D-printed case as well as other peripherals.
- `./sappho-docs`
  - The `sappho-docs` directory contains pdf documents such as our thesis and its presentation, our publications, and the TeX source code for some legal documents required for the project.
- `./sappho-pcb`
  - The directory `sappho-pcb` contains the files required for printing and/or editing the project's PCB
- `./sappho-pda`
  - This directory contains the source code required for using the Toshiba TCD1103GFG PDA sensor in conjunction with the Beaglebone Black Rev. C microcomputer, as well as some installation scripts. This code has been forked from StratosGK's "SGK_PDA" driver for the AMS TSL1401CL PDA. Please copy this directory under the directory `/home/debian/`.

Installation & Building

Beaglebone Black Rev. C

View as: Public

You are viewing the README and pinned repositories as a public user.

You can hide the tasks we've suggested on this page and bring them back later.

Discussions

Set up discussions to engage with your community!

Turn on discussions

Repositories

sappho-analysis — Python 0 Updated on Nov 12

sappho-pda-beaglebone — C 0 Updated on Oct 22

.github — 0 Updated on Oct 22

sappho-pcb — ANTLR 0 Updated on Oct 22

sappho-docs — 0 Updated on Oct 22

View all repositories

Create new repository | Import

People

Invite someone

Contents

1 Introduction

2 Data Analysis

3 Conclusions and Future Plans

4 References

Data Analysis - Round 1

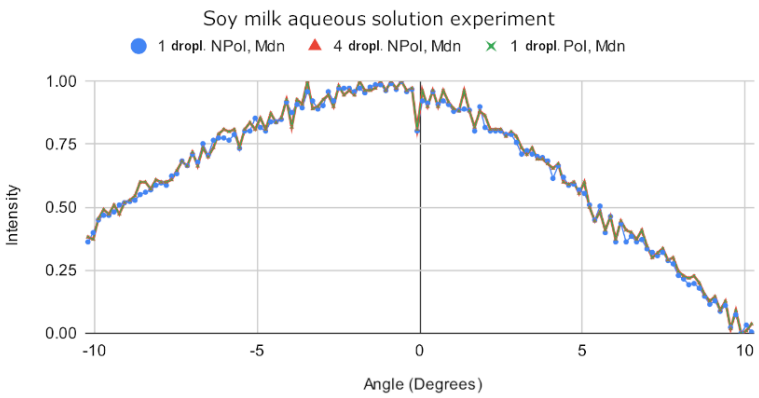

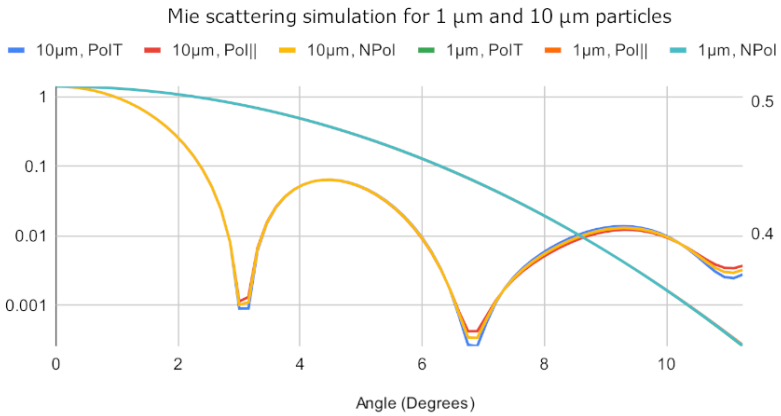

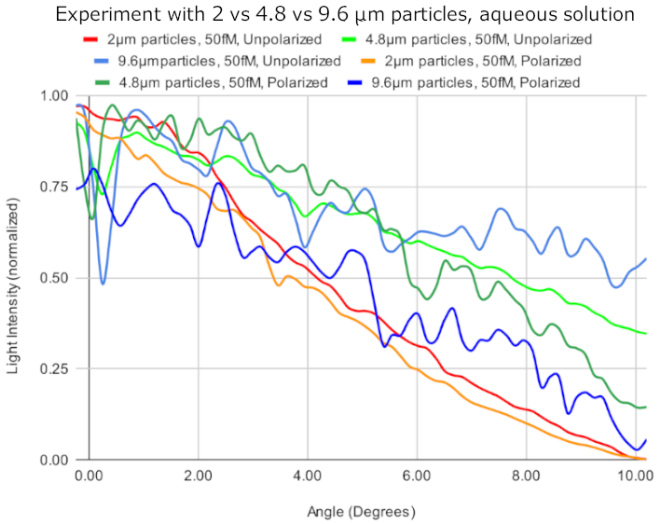

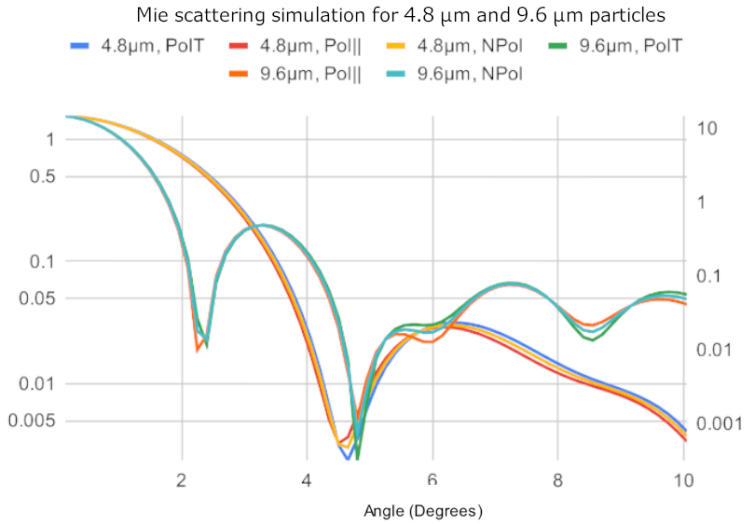

Data Analysis - Round 1

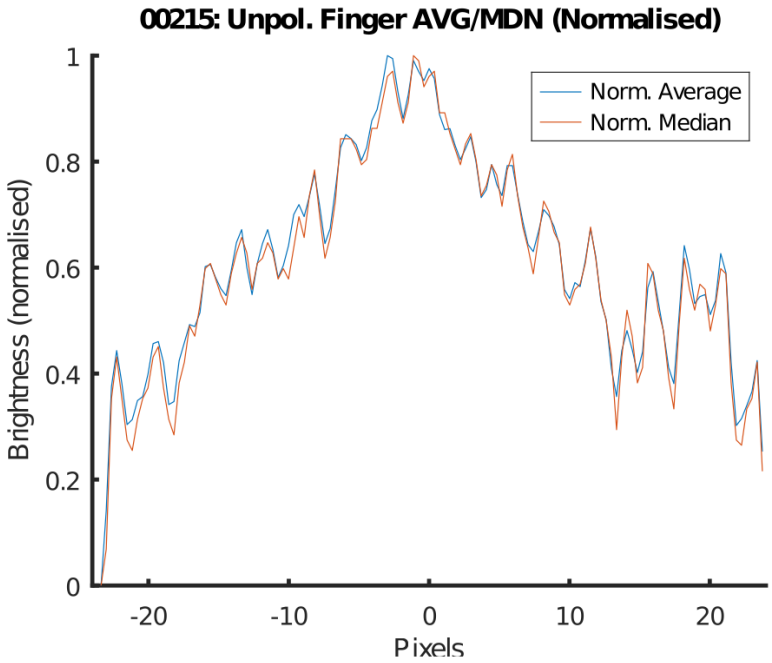

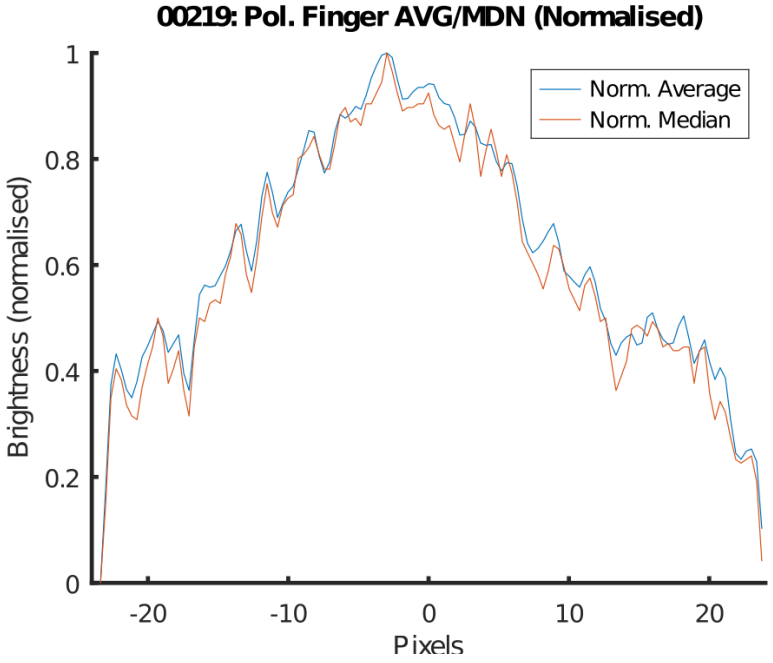

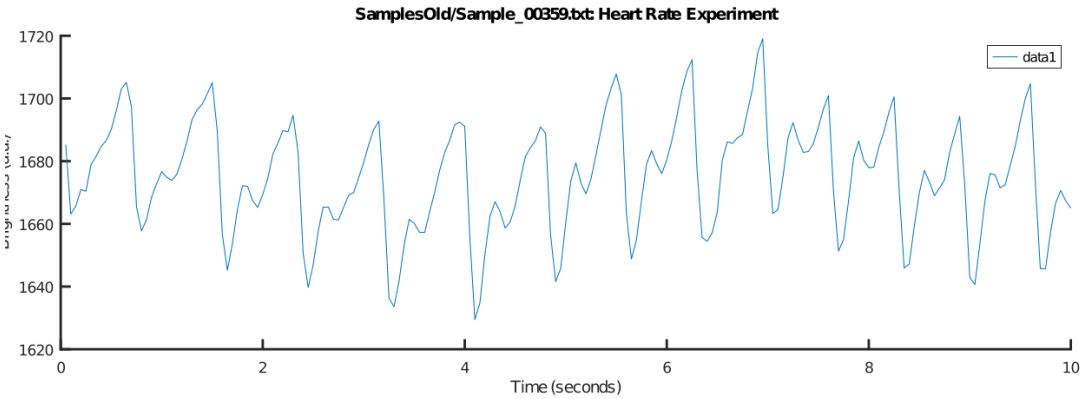

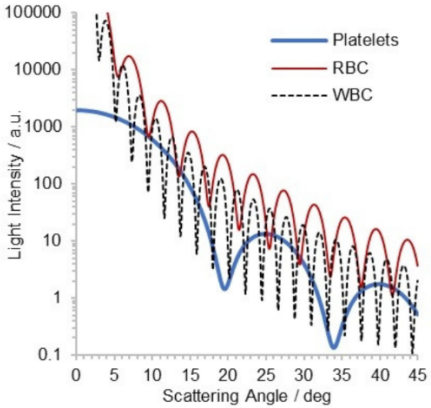

Data Analysis - Round 2: Coherence

- 2 μm and 9.6 μm particles correctly correlate to the expected signals regardless of (small) distance variations between the sample and the sensor
- In the case of 4.8 μm particles, this observation is not as strong
- Control signals may mistakenly classify as 2 μm particles (false positives)

Table: Lowest and highest coherence ranges for different particle sizes

Sim. Part.	Filter	Low Range	High Range
2μm	Unfiltered	0.05-0.20	0.35-0.60
2μm	2% Mov. Avg.	0.05-0.20	0.40-0.65
4.8μm	Unfiltered	0.10-0.25	0.40-0.60
4.8μm	2% Mov. Avg.	0.10-0.25	0.40-0.60
9.6μm	Unfiltered	0.10-0.25	0.40-0.70
9.6μm	2% Mov. Avg.	0.10-0.20	0.45-0.75

Data Analysis - Round 2: K-means Clustering

Summary: split the dataset into K different clusters based on their similarities.

- Attempt 1: Use the (normalised) raw data and the naive K-means algorithm
  - Results: Only marginally better than random guessing
- Attempt 2: Use the (normalised) raw data and the *k-means++* algorithm.
  - Results: 7% better than the previous attempt's (i.e. still modest).
- Future suggestions: Instead of using the raw data, try to perform the clustering based on the indicators of other tests.

Data Analysis - Round 2: Time-domain correlation tests

- Method 1: R^2 (coefficient of determination) test between the simulated signal and the signals derived from experiments
- Method 2: Pearson correlation coefficient (to double-check the results of the previous method
- Observations: A mostly linear relationship between the results of the time-domain correlation tests and the results of the coherence test; fewer false positives regarding control signals @ 2 µm; Pearson agrees with R^2

Table: Lowest and highest R^2 distribution ranges for different particle sizes

Particle	**Filter**	**Max. Rng.**	**Min. Rng.**
2µm	Unfiltered	0.75-0.86	(-4.54)-(-3.40)
2µm	2% Mov. Avg.	0.76-0.86	(-4.52)-(-3.41)
4.8µm	Unfiltered	0.67-0.83	(-4.59)-(-3.04)
4.8µm	2% Mov. Avg.	0.67-0.84	(-4.60)-(-3.05)
9.6µm	Unfiltered	0.65-0.82	(-6.92)-(-4.98)
9.6µm	2% Mov. Avg.	0.66-0.83	(-6.92)-(-4.98)

Data Analysis - Round 2: Dynamic Time Warping

- Time-domain correlation between the simulated signal(s) and the experimentally-derived signal(s)
- Results exhibit a linear relationship with the results of R^2 and coherence
- Fewer false positives regarding control signals @ 2 µm

Table: Coherence and dynamic time warping data for different simulated particle sizes

Part.	Filt.	Min. Rng.	Coherence	Max. Rng.	Coherence
2µm	Unfil.	0.77-2.28	0.35-0.6	5.51-6.52	0.05-0.20
2µm	2% MA	0.75-2.24	0.40-0.60	5.52-6.52	0.05-0.20
4.8µm	Unfil.	1.58-2.64	0.40-0.60	6.33-7.49	0.10-0.30
4.8µm	2% MA	1.54-2.61	0.40-0.60	6.35-7.52	0.10-0.25
9.6µm	Unfil.	1.32-2.56	0.45-0.70	7.30-8.89	0.10-0.25
9.6µm	2% MA	1.26-2.49	0.45-0.75	7.32-8.92	0.10-0.20

Data Analysis - Round 2: Kolmogorov-Smirnov

- Final "confidence check" to cross-check all of our previous results
- Dataset contents:
  1. Samples of individual calibrated solutions of fixed-diameter particles
  2. Various control samples
  3. Non-standardised aqueous solutions (such as solutions of soy milk, oat milk, salts, etc.)
  4. In-vivo samples
  5. Mixed solutions of fixed-diameter particles,
  6. Other data from minor experiments
- What percentage of the dataset passes the Kolmogorov-Smirnov test with a p-value $\leqslant 0.05$
- Ideally: Approximately 38%, assuming all samples [esp. in category #1] are of equal measurement quality
- Realistically, not all of the above experiments are of equal quality
- Experimental result: 29.78%

Contents

1 Introduction

2 Data Analysis

3 Conclusions and Future Plans

4 References

Pitfalls in statistics (xkcd 1132 - CC BY-NC 2.5)

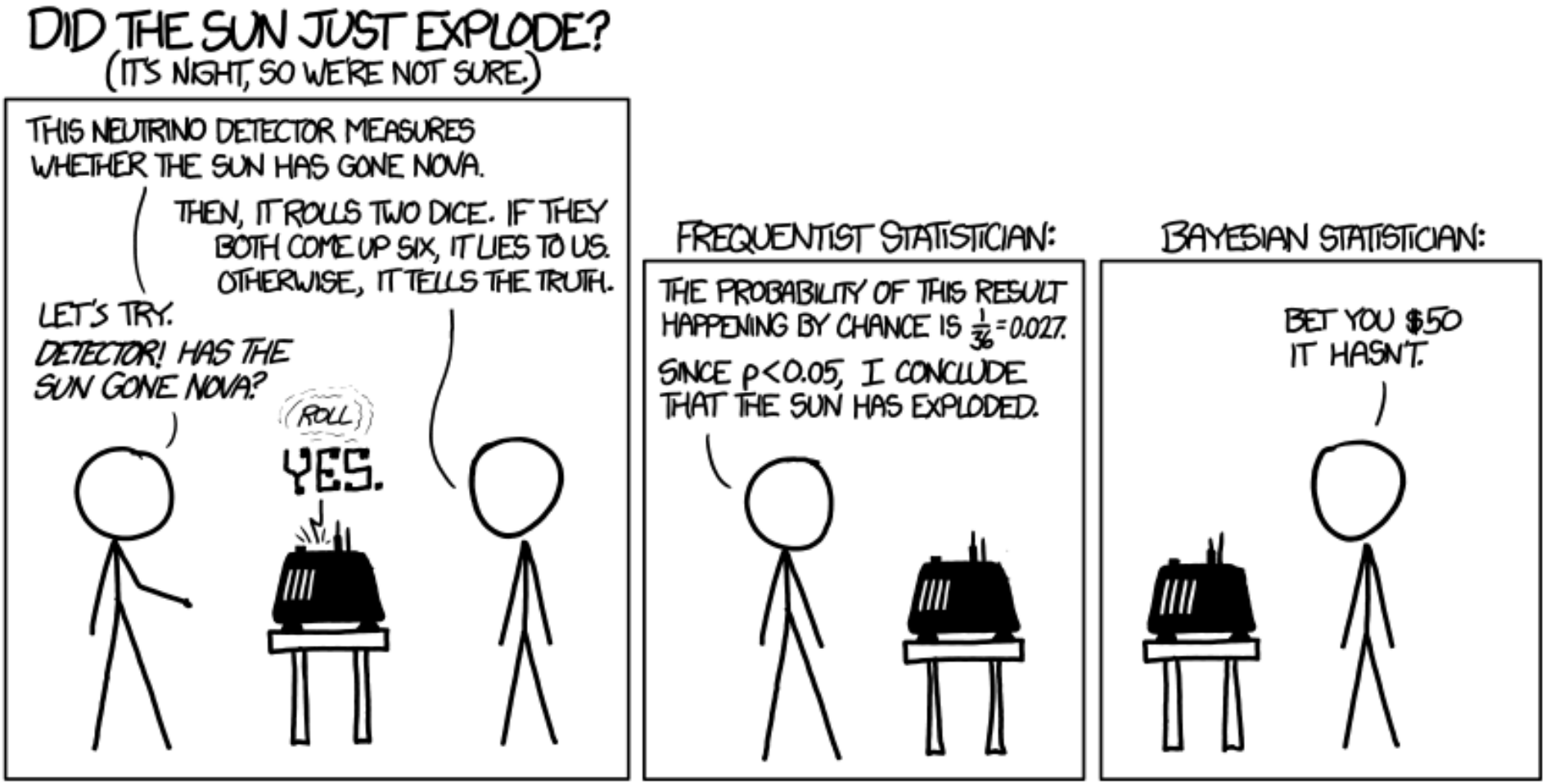

Conclusions & Future Plans

- Even though most of the above tests yielded promising results, there is still a requirement for further study
- Future analysis:
  1. Wavelet transform (pattern extraction)
  2. Fuzzy logic (data classification)
  3. Machine learning (pattern extraction, data classification)
  4. Further statistical analysis
- Future improvements:
  1. Develop software drivers for other microcomputers and microcontrollers
  2. Increase portability & further increase accessibility
  3. Increase compliance with biomedical standards
  4. Optics-related improvements for noise reduction
  5. Higher quality (and larger) dataset

Contents

1 Introduction

2 Data Analysis

3 Conclusions and Future Plans

4 References

References

1. M. Michailidou, A. Bantis, *Scattering measurements with the Beaglebone microcomputer for portable biomedical sensors*, International Hellenic University, 2022
2. A. Bantis, M. Michailidou, E. Gkagkanis, K. Karakostas and M. E. Kiziroglou, *Fabrication and Development of an Optical Biomedical Sensor*, International Workshop on Microsystems, 2021
3. Karakostas K., *"Portable system development for Mie scattering analysis, to determine the size of blood cells in in-vivo and in-vitro studies"*, Aristotle University of Thessaloniki, 2019
4. Konstantinos Karakostas, Stratos Gkagkanis, Korina Katsaliaki, Peter Köllensperger, Alkiviadis Hatzopoulos, and Michail E. Kiziroglou, *"Portable optical blood scattering sensor"*, Microelectronic Engineering 217 (2019) 111129, Elsevier
5. Pauli Virtanen et al., *SciPy 1.0: Fundamental Algorithms for Scientific Computing in Python.*, Nature Methods, 17(3), 261-272., 2020
6. Simon Haykin, *"Neural Networks and Learning Machines"*, McMaster University, Hamilton, Ontario, Canada
7. Pedregosa et al., *Scikit-learn: Machine Learning in Python*, JMLR 12, pp. 2825-2830, 2011.
8. Stan Salvador and Philip Chan, *FastDTW: Toward Accurate Dynamic Time Warping in Linear Time and Space*, Florida Institute of Technology, 2007

Thank you for your attention!

A. Bantis, M. Michailidou, A. Dziuba