Journal of Computational Design and Engineering, 2025, **12**, 115–129
DOI: 10.1093/jcde/qwaf017
Advance access publication date: 6 February 2025
Research Article

GazeSymCAT: A symmetric cross-attention transformer for robust gaze estimation under extreme head poses and gaze variations

Yupeng Zhong and Sang Hun Lee *

Graduate School of Automobile and Mobility, Kookmin University, 77 Jeongneung-ro, Seongbuk-gu, Seoul 02707, Republic of Korea
*Correspondence: shlee @kookmin.ac.kr

Abstract

With the rapid advancement of artificial intelligence, research on deep neural networks for estimating gaze from facial images captured by cameras has grown significantly. However, gaze estimation remains challenging due to the diversity of facial features, variability in head posture, partial occlusion, varying lighting conditions, eye image quality, complex eye movements, and a lack of large-scale, diverse data sets. Particularly, estimating a driver's gaze while driving a vehicle is difficult due to occlusion of the eyes when checking mirrors or turning the head to view blind spots and surroundings. To address these issues, we developed an appearance-based gaze estimation neural network based on attention, called GazeSymCAT (symmetric cross-attention transformer for gaze estimation). The proposed GazeSymCAT obtains contextual information that reflects the relationships among the extracted facial and eye image features through an encoder–decoder structure composed of self- and cross-attention layers of the transformer. This structure is followed by adding fully connected layers that estimate the gaze direction. The model proposed in this study was tested on the ETH-XGaze data set, a large-scale, state-of-the-art (SOTA) data set that includes extreme head postures, achieving SOTA performance. Additionally, it demonstrated SOTA-comparable performance on existing general gaze estimation-related data sets, MPIIFaceGaze and EYEDIAP.

Keywords: gaze estimation, transformer, cross-attention, neural network, extreme head posture

1. Introduction

Gaze direction refers to the orientation or angle at which a person directs their visual attention, typically represented by the line of sight in 3D space using coordinates or angles. It is influenced by various factors, such as eye position, head orientation, and the specific point of interest in the environment. In fields like psychology, neuroscience, and human–computer interaction, gaze direction is studied to gain insights into attention, perception, and interactions with objects or people. Accurately measuring gaze direction has a wide range of applications, including Human-Computer Interaction (HCI) or Human-Machine Interface (HMI) (Andrist *et al.*, 2014; Moon *et al.*, 2014), saliency prediction (Xu *et al.*, 2016), Virtual Reality (VR) or Augmented Reality (AR) devices (Sitzmann *et al.*, 2018; Konrad *et al.*, 2020; Cho *et al.*, 2024), medical analytics (Kerr-Gaffney *et al.*, 2019; Castner *et al.*, 2020), and driver monitoring systems (Eom & Lee, 2015; Mavely *et al.*, 2017; Lee & Yoon, 2020; Eom & Lee, 2022).

Eye-model- and appearance-based methods are two approaches used in gaze estimation, each with its characteristics. Eye-model-based gaze estimation methods utilize geometric models of the eyes to calculate gaze direction. These methods often involve tracking the position and movement of the eyes, focusing on features like the pupil centre and corneal reflection. They offer precision and adaptability by accounting for individual anatomical differences and maintaining robustness under varying lighting conditions. Despite these strengths, such methods are often intricate, requiring detailed calibration and specialized equipment. Their accuracy can be affected by occlusions, where the eyes may be partially hidden, and they generally depend on hardware like infrared cameras for optimal performance.

Appearance-based gaze estimation methods use visual features extracted from the face and eyes in images or videos to estimate gaze direction (Zhang *et al.*, 2017a; Ghosh *et al.*, 2023). These methods typically employ machine learning or deep learning models to analyse these features (Ghosh *et al.*, 2023). One of the main advantages of appearance-based methods is the simplicity of setup; they generally require less specialized hardware and can work with standard cameras. Additionally, these methods are flexible and can handle various head poses and facial appearances, as they do not rely on specific eye geometry. They are also easier to scale for different subjects, utilizing large data sets for training. However, appearance-based methods can be affected by variability in lighting, head pose, and occlusions, which may impact their performance. They may also provide less accurate gaze estimates than eye models, particularly in challenging conditions, and their effectiveness relies heavily on the quality and diversity of the training data set (Zhang *et al.*, 2015).

Appearance-based gaze estimation methods can be broadly categorized into three types based on their use of eye and face images as input data. The first type relies solely on eye images, which includes methods that utilize either a single eye image (Zhang *et al.*, 2015, 2017b) or both eye images (He *et al.*, 2015; Huang *et al.*,

Received: November 29, 2024. **Revised:** February 1, 2025. **Accepted:** February 1, 2025
© The Author(s) 2025. Published by Oxford University Press on behalf of the Society for Computational Design and Engineering. This is an Open Access article distributed under the terms of the Creative Commons Attribution-NonCommercial License (https://creativecommons.org/licenses/by-nc/4.0/), which permits non-commercial re-use, distribution, and reproduction in any medium, provided the original work is properly cited. For commercial re-use, please contact journals.permissions@oup.com

Downloaded from https://academic.oup.com/jcde/article/12/3/115/8003774 by guest on 08 April 2026

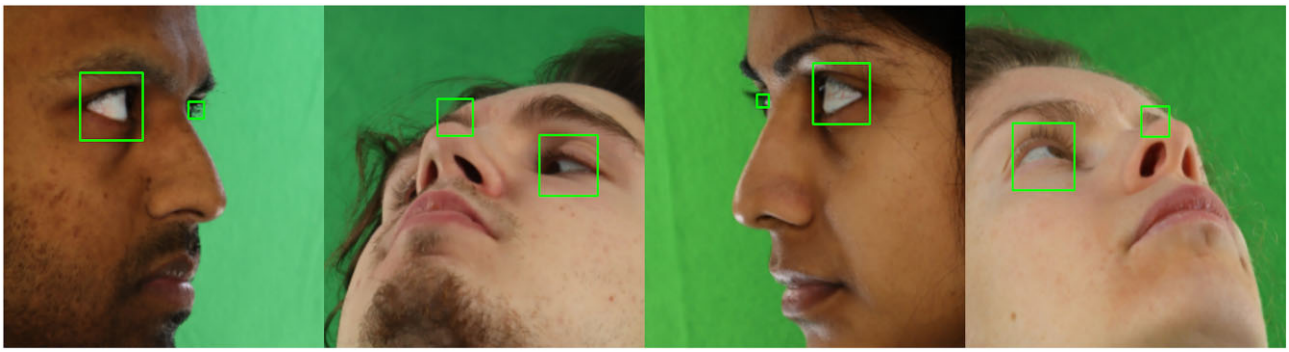

Figure 1: In cases of extreme head rotation, capturing accurate eye images becomes highly challenging. The eye image within the green box, identified using a facial landmark recognition system, is directly used as input to the network for gaze estimation. However, the network's performance can deteriorate in these extreme head positions due to insufficient detailed eye information.

2017). The second type uses a full-face image (Zhang *et al.*, 2017a; Wang *et al.*, 2023a), where the eyes are part of the facial input. The third type combines the entire face with both eye images as input data (Cheng *et al.*, 2020a; Murthy & Biswas, 2021). In the first and third types of methods that utilize eye images, facial landmarks are first identified to extract the eye region and capture an eye image. However, the accuracy of facial landmark recognition is highly dependent on the quality and state of the input data. For example, landmarks are accurately predicted in a clear, unobstructed face image. In contrast, under extreme head postures—such as the one shown in Figure 1—the eyes may be partially obscured by other facial features, leading to poor landmark recognition. This results in incorrect or incomplete eye image extraction, negatively impacting gaze estimation accuracy. Consequently, the first type of methods that rely solely on eye images may experience significant performance degradation in such cases.

To mitigate the issues associated with unreliable facial landmark prediction, some researchers have used full-face images as input for gaze estimation (Wang *et al.*, 2023a). However, combining face and eye images generally proves more effective than using face images alone. Face images capture a broad range of information, including head orientation, but they tend to lack the detailed features needed for precise gaze estimation. Eye images, in contrast, provide fine-grained detail specifically relevant to gaze direction but offer only limited information about head orientation. We should not overlook the complementary nature of these two sources of information, as it can significantly impact gaze estimation performance. For example, when a driver turns their head to check the side mirror, we can minimize performance degradation due to partial facial occlusion from extreme head posture by considering the combined context of face and eye features. By leveraging the strengths of both face and eye images to offset their respective limitations, gaze estimation accuracy may be enhanced, particularly in extreme postures.

This paper presents a transformer-based neural network model called GazeSymCAT (symmetric cross-attention transformer network for gaze estimation), designed to address extreme head postures and typical conditions in gaze estimation by leveraging face and eye images simultaneously. GazeSymCAT comprises three primary modules: feature extraction, feature fusion, and gaze estimation. The feature extraction module uses the ResNet (He *et al.*, 2016) model to extract features from face and eye images, enhancing performance by incorporating a channel attention mechanism in each ResNet block. The feature fusion module employs a transformer architecture to create tokens with contextual information by integrating face and eye features. In this module, the encoder treats the face, left eye, and right eye features as separate tokens, capturing their correlations through self-attention mechanisms. Next, the decoder computes cross-attention between the encoder's extracted feature tokens and the decoder's query tokens and applies attention-based pooling (Vaswani *et al.*, 2017; Sun *et al.*, 2023). The encoding and decoding process is repeated multiple times to produce an output optimized for gaze direction estimation. Finally, the gaze estimation module passes the decoder's output through fully connected (FC) layers to calculate gaze direction. By implementing GazeSymCAT, we significantly enhanced gaze estimation performance on images with extreme head postures as well as standard facial images.

The main contributions of this research are as follows:

- GazeSymCAT is a novel approach to enhance gaze estimation accuracy for standard and extreme head postures. To our knowledge, this is the first exploration of feature fusion specifically designed to address challenges associated with extreme head postures in gaze estimation.
- We propose an innovative feature fusion model based on a transformer architecture with a symmetric cross-attention mechanism. This design enables flexible alignment of features to the gaze estimation objective, effectively incorporating contextual information between eye and face features.
- Our proposed GazeSymCAT achieves state-of-the-art (SOTA) performance on the ETH-XGaze data set (Zhang *et al.*, 2020), a large data set featuring extreme head poses, and delivers competitive results on the MPIIFaceGaze (Zhang *et al.*, 2017a) and EYEDIAP (Funes Mora *et al.*, 2014) data sets, which are smaller, traditional frontal gaze data sets.

The remainder of the paper is organized as follows: Section 2 reviews recent related work, and Section 3 outlines the architecture of the proposed system, detailing the algorithm for each step. Section 4 presents the results of various experiments on the model, including an ablation study for each module. Finally, Section 5 concludes the paper.

2. Relate Work

2.1 Appearance-based gaze estimation

Appearance-based methods estimate gaze direction directly from facial images (Ghosh *et al.*, 2023; Cheng *et al.*, 2024). GazeNet (Zhang *et al.*, 2017b) was the first attempt to use a convolutional neural network (CNN) for appearance-based gaze estimation. It processes a single channel of monocular images through a series

Downloaded from https://academic.oup.com/jcde/article/12/3/115/8003774 by guest on 08 April 2026

of convolutional and pooling layers in a 16-layer VGG-based architecture, incorporating 3D head pose information in the FC layers before outputting gaze direction. Using cross-validation, GazeNet achieves a gaze estimation accuracy of 6.3°.

With the continuous development of public gaze data sets, appearance-based deep learning methods for gaze estimation have also advanced significantly (Funes Mora *et al.*, 2014; Zhang *et al.*, 2015, 2017a, 2020). Cheng *et al.* (2018) proposed a method using a feature extraction network (AR-Net) to capture features from both eyes, adjusted by feedback values from an evaluation network (E-Net) to refine network weights, and fused head posture information throughout all FC layers, achieving an average angular error of 5.0° on the MPIIGaze data set. Park *et al.* (2018) introduced a gaze estimation method that uses an intermediate graphical representation of the eye rather than directly estimating the pitch and yaw angles, resulting in improved accuracy. Another approach, presented in Cheng *et al.* (2020a), proposed a coarse-fine network combining face and eye images. It estimates the general gaze direction from the face image and refines it using residuals predicted from the eye image.

Recent studies (Carion *et al.*, 2020; Dosovitskiy, 2020) highlight the success of transformers in computer vision. Cheng & Lu (2022) applied a hybrid transformer mechanism for gaze estimation, combining CNNs with attention layers to extract features, resulting in improved accuracy. Oh *et al.* (2022) proposed a self-attention-based method that uses convolution across facial images to capture local information efficiently, reducing the computational cost of self-attention while enhancing generalization. Ren *et al.* (2023) introduced a feature fusion approach using multi-level information elements to improve the overall performance of appearance-based gaze estimation models. Jindal & Manduchi (2023) also proposed a self-supervised framework for gaze estimation. They promoted equivariance by leveraging multi-view data using the selected data augmentation techniques that do not alter gaze directions for invariance learning. Finally, Yin *et al.* (2024) used Contrastive Language-Image Pre-training (CLIP) to filter out gaze-irrelevant components within an image encoder. CLIP, trained on large-scale image-text pairs, learns diverse visual-verbal associations, effectively managing non-gaze-related factors and achieving robust generalization.

2.2 Gaze estimation with extreme head pose

Feature extraction is a critical task in deep learning, with the quality of extracted features significantly influencing gaze estimation accuracy. However, capturing effective features from complex eye shapes presents a challenge. Head posture has also been an often-overlooked factor in gaze estimation using deep learning. It was not until 2020 that data sets featuring extreme head postures became available. The ETH-XGaze data set (Zhang *et al.*, 2020) was the first to address this gap by including extensive head posture variations. Prior to its release, various gaze estimation methods attempted to incorporate head posture information, but most existing data sets lacked large head rotation angles due to equipment limitations during data collection. Consequently, the impact of head posture on gaze estimation has historically been underexplored.

Some researchers (Qin et al., 2022; Wang et al., 2023b) have attempted to address the challenge of extreme head postures in gaze estimation by expanding the data space with the incorporation of additional images. Cheng & Lu (2023) explored using image pairs to improve gaze estimation accuracy. However, as the widespread use of dual-camera setups is still limited, finding solutions for handling extreme head postures using single-camera images remains a significant and valuable challenge.

Images of faces in extreme head positions captured by a single camera often lack complete eye or face information. However, these images can still reveal approximate gaze direction. Combining available eye data or partial gaze information makes it possible to achieve accurate gaze estimates. Effective feature fusion during data preprocessing and mitigating the impact of incomplete or inaccurate eye images have become essential strategies to address this challenge. To tackle this, we developed GazeSymCAT, specifically designed to manage these difficulties effectively.

3. Architecture of GazeSymCAT

GazeSymCAT addresses the challenges posed by extreme head postures through cross-attention integration of three features: face, left eye, and right eye. The overall architecture, shown in Figure 2, comprises three main modules: the feature extraction module based on a CNN model, the feature fusion module based on a transformer structure, and the gaze estimation module based on FC layers. First, the feature extraction module extracts feature information from face and eye images. ResNet50 is used as the CNN model, with a channel attention mechanism applied to each layer to enhance feature extraction. Second, the feature fusion module utilizes a conventional transformer structure, with the encoder and decoder configured to capture contextual information through interactions between the face and eye features as well as the hidden states of the encoder and decoder. In Figure 2, the encoder at the top receives individual face, left eye, and right eye features as input. The decoder at the bottom then takes the object queries as input, which are learnable representations of a face and two eyes for predicting gaze directions. It converts it into a hidden state suitable for estimating gaze direction by interacting with the encoder's hidden state, provided as keys and values, through a cross-attention mechanism. Finally, the gaze estimation module processes these hidden states through FC layers to regress the pitch and yaw values for gaze direction. Each module is detailed further in the following sections.

3.1 Feature extraction using ResNet with dense channelwise attention mechanism

Attention mechanisms enhance a network's representational power and performance by enabling the model to focus on features most relevant to the target outcome (Hu *et al.*, 2018; Woo *et al.*, 2018; Wang *et al.*, 2020; Lee *et al.*, 2023). In this work, we investigate the application of channel attention mechanisms within CNN models to improve model performance further. Currently, most channel attention mechanisms are limited to operating only on adjacent convolutional layers, which can be expressed as follows:

$$\tilde{X} = \text{Atten}\left(\text{Conv}\left(X\right)\right) \oplus X, \ \tilde{X} \in \mathbb{R}^{H \times W \times C}, \tag{1}$$

where X represents the input and $\tilde{X}$ is the extracted feature. Traditionally, channel attention mechanisms are applied to the output of the final convolutional layer within a model or block to refine feature extraction. However, this approach has a potential drawback: the features passed to the attention mechanism may lack crucial information from preceding local features. This cumulative information loss can impair the network's ability to accurately capture the relationships between head posture and eyes, or between the pupil and the entire eye region.

Downloaded from https://academic.oup.com/jcde/article/12/3/115/8003774 by guest on 08 April 2026

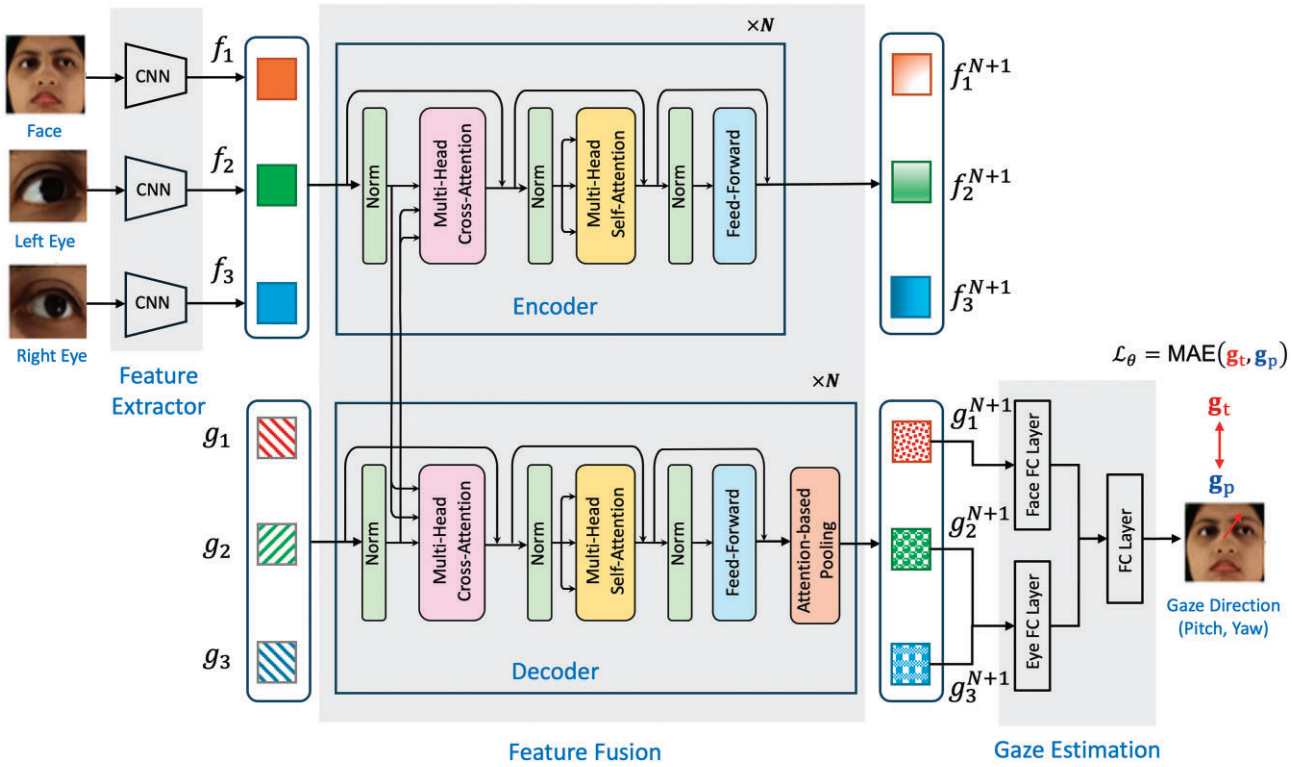

Figure 2: Overall architecture of GazeSymCAT.

To address this, inspired by Zhao *et al.* (2022), we introduce an approach where all features obtained from all convolutional layers are fed into the attention mechanism, preserving essential information throughout. Based on this approach, we implemented a method called dense channelwise attention (DCA), which feeds all features from each in-block convolutional layer into the attention mechanism, as illustrated in Figure 3a. The mathematical expression for this is as follows:

$$\begin{aligned} X_1 &= \mathrm{Conv}\,(X)\,, \\ X_2 &= \mathrm{Conv}\,(X_1)\,, \\ X_3 &= \mathrm{Conv}\,(X_2)\,, \\ W &= \mathrm{DCA}\,(\mathrm{Conv}\,(X_1, X_2, X_3))\,, \\ \tilde{X} &= (W \otimes X_3) \oplus X,\ \ \tilde{X} \in \mathbb{R}^{H\times W\times C} \end{aligned} \tag{2}$$

where $\tilde{X}$ represents the extracted features, DCA denotes the dense channel attention function, and X_1, X_2, and X_3 are the outputs from each convolutional layer.

The integration of a dense channel attention mechanism into each Conv block of ResNet50 is illustrated in Figure 3b. Global average pooling is applied to the output feature map of each convolutional layer, resulting in a feature map of size $1 \times 1 \times C$. Next, 1×1 convolutional layers reduce dimensionality, followed by batch normalization (BN) to adjust the distribution of compressed features, promote linearity, and enhance the learnability of the integrated features in the model. BN is followed by the ReLU activation function, another 1×1 convolution, and finally, a Sigmoid activation function to obtain the attention values for each channel. The mathematical representation of this process is as follows:

$$W = \mathrm{Sigmoid}\left(\mathrm{Conv1{\times}1}\left(\mathrm{ReLU}\bigoplus_{i=1}^{n}(\mathrm{BN}(\mathrm{Conv1{\times}1}\,(\mathrm{GAP}\ \ (X_i))))\right)\right),$$
$$i \in \{1 \cdots n\} \tag{3}$$

where Conv 1×1 denotes the 1×1 convolution, BN represents batch normalization, and GAP is the global average pooling layer. Inspired by ECA-Net (Wang *et al.*, 2020), we used a 1×1 convolutional layer instead of an FC one.

3.2 Feature fusion using symmetric cross- and self-attention mechanism

When estimating gaze, capturing the human eyes in extreme head postures, as illustrated in Figure 1, can be challenging. These incomplete and inaccurate eye features introduce considerable noise into the network, negatively impacting gaze estimation accuracy. Previous studies (Wang *et al.*, 2023a) have attempted to address this by estimating gaze using the entire face; however, as noted by other research (Cheng *et al.*, 2020a,b), relying solely on the full-face image can degrade performance due to the absence of detailed eye features. When eye features are combined with full-face features through simple concatenation, the resulting representation may contain excessive redundant information from the eyes, which can obstruct the model's ability to effectively capture contextual information. To address these challenges, we introduce a feature fusion module, which is a modified version of the structure of a traditional transformer to fuse face and eye features effectively. This allows the network to independently adjust feature weights based on the contextual relationship between the face and eyes, resulting in features that are more effective for gaze estimation.

Inspired by multimodal research (Sun *et al.*, 2023), we employ a symmetric cross-attention mechanism, as illustrated in Figure 4, to assign appropriate attention weights to each feature. For the input tokens X_s and X_t related to the source s and target t, the key is defined as $K_s = X_s W_K$, the value as $V_s = H_s W_V$, and the query as $Q_t = X_t W_Q$. The cross-attention mechanism can be represented by

Downloaded from https://academic.oup.com/jcde/article/12/3/115/8003774 by guest on 08 April 2026

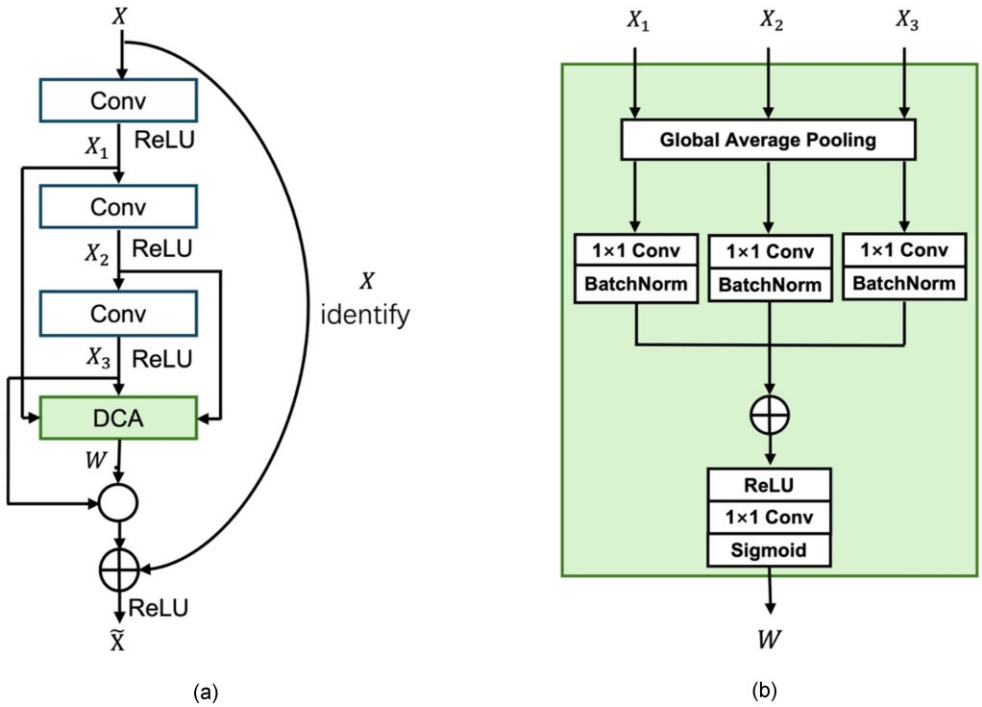

Figure 3: Overview of the DCA block and mechanism: (a) ResNet block with the DCA, and (b) DCA block.

the following equation:

$$\mathrm{CA}\left(X_t, X_s\right) = \mathrm{Softmax}\left(\frac{Q_t K_s^T}{\sqrt{d_k}}\right) V_s \tag{4}$$

The attention-based feature fusion module takes as input the tokens of three features extracted by the CNN-based feature extraction module and feeds them into the encoder. It combines these feature tokens by integrating contextual information through self-attention in both the encoder and decoder. Subsequently, it fuses the hidden states from the encoder and decoder through symmetric cross-attention between the two, allowing for effective information transfer and producing an output optimized for gaze estimation. As shown in Figure 2, $F = \{f_1,\ f_2,\ f_3\}$, which consists of the face feature f_1, left eye feature f_2, and right eye feature f_3, extracted by the ResNet50 backbone network with DCA blocks, are provided as inputs to the encoder of the feature fusion module. The module can operate with object queries, $G = \{g_1,\ g_2,\ g_3\}$, which is learnable, at the decoder.

To achieve symmetric cross-attention, an n-to-n fusion between encoder and decoder hidden states is ideal. However, in our implementation, we perform 1-to-n fusion for each encoder hidden state and then combine the results to achieve n-to-n fusion. As illustrated in Figure 4a, a feature fusion module is applied to F_i and G_i to obtain the $i+1$th hidden states F^{i+1} and G^{i+1}. Then, a 1NF(1-to-n fusion) function is applied to a token f_j^i from the encoder to perform 1-to-n cross-attention with G^i, producing $f_j^{i+1}$and $G_{f_j\to G}^{i+1}$, as shown in Figure 4b. Repeating this for $j = 1, \ldots, 3$ results in the sets $F^{i+1} = \{f_1^{i+1},\ f_2^{i+1},\ f_3^{i+1}\}$ and $G_{F\to G}^i = \{G_{f_1\to G}^i,\ G_{f_2\to G}^i,\ G_{f_3\to G}^i\}$. Finally, applying the attention-based pooling layer from Equation 5 to $G_{F\to G}^i$ yields G^{i+1}.

$$\begin{aligned} f_j^{i+1}, G_{f_j\to G}^{i+1} &= \mathrm{1NF}\left(f_j^i, G^i\right), i \in \{1, \ldots, n\}, j \in \{1, \ldots, 3\}. \\ G^{i+1} &= \mathrm{Softmax}\left(v^T \tanh\left(W^T G_c^T + b\right)\right) G_c \end{aligned} \tag{5}$$

where v, W, b, and $G_c = \mathrm{Concat}(G_{f_1\to G}^{i+1}, G_{f_2\to G}^{i+1}, G_{f_3\to G}^{i+1})$ are the parameters to be learned. In this study, the feature fusion module computes $G^3 = \{g_1^3,\ g_2^3,\ g_3^3\}$ with $N = 2$ and passes it to the gaze estimation module.

3.3 Loss for gaze estimation

In Figure 2, given the fused features G^{N+1} obtained from the attention-based feature fusion module, g_1^{N+1} is passed through the FC layer for the face, and $\{g_2^{N+1},\ g_3^{N+1}\}$ is passed through the FC layer for both eyes. The resulting output is then passed through another FC layer to estimate the gaze direction. The loss between the predicted gaze direction and the annotated true gaze direction is defined as in Equation 6, and the proposed model is trained to minimize this loss. The gaze loss is calculated using the following formula:

$$\mathcal{L}_{\angle} = \mathrm{MAE}(\mathbf{g}_t, \mathbf{g}_p) = \frac{\mathbf{g}_t \cdot \mathbf{g}_p}{||\mathbf{g}_t||\ ||\mathbf{g}_p||} \tag{6}$$

where MAE represents the mean absolute error, $\mathbf{g}_t$ is the true gaze direction, and $\mathbf{g}_p$ is the predicted gaze direction.

4. Experiment Results and Analysis

4.1 Gaze data sets

As this study focuses on gaze estimation in extreme head postures, we selected the ETH-XGaze data set (Zhang *et al.*, 2020) as the primary experimental data set due to its wide range of head posture variations compared to other data sets. We also selected conventional data sets such as EYEDIAP (Funes Mora *et al.*, 2014) and MPIIFaceGaze (Zhang *et al.*, 2017a) to enable comparison with the latest performance of other methods developed based on different data sets.

The EYEDIAP data set (Funes Mora *et al.*, 2014) is a valuable resource for gaze estimation research, consisting of 94 videos collected from 16 subjects, totaling 237 minutes of footage. The data

Downloaded from https://academic.oup.com/jcde/article/12/3/115/8003774 by guest on 08 April 2026

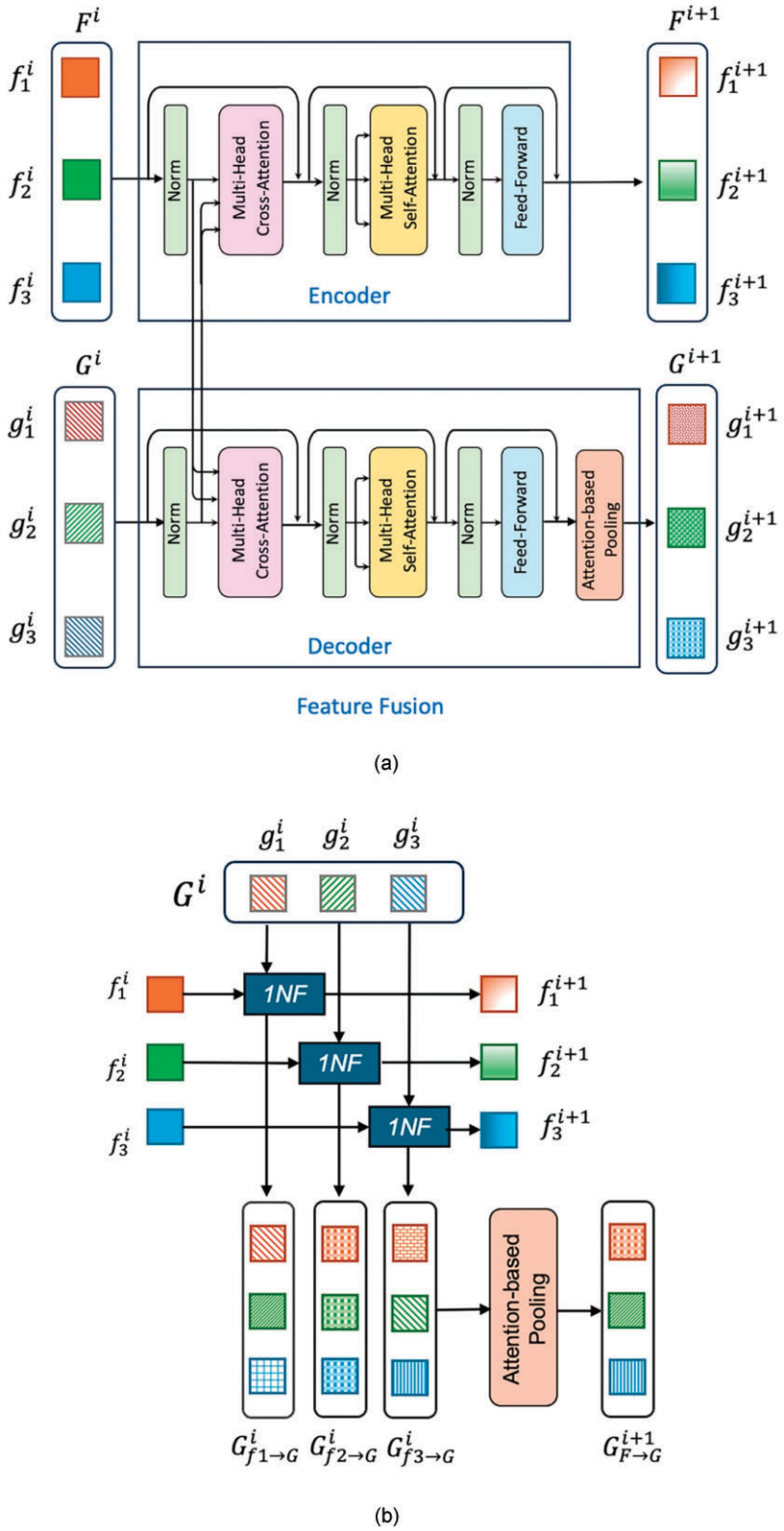

Figure 4: Implementation of the attention-based feature fusion module: (a) objects for 1-to-*n* fusion (1NF), and (b) implementation of the 1NF algorithm.

Downloaded from https://academic.oup.com/jcde/article/12/3/115/8003774 by guest on 08 April 2026

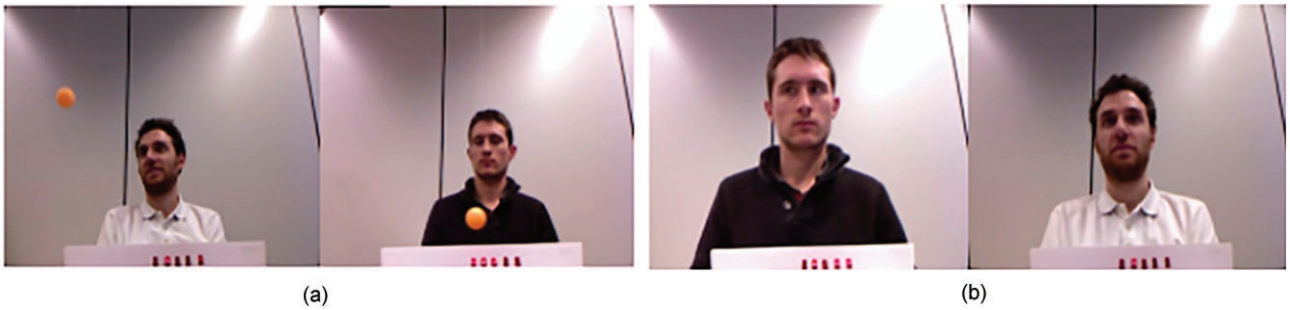

Figure 5: Examples of the EYEDIAP data set. (a) Subjects are gazing at the 3D FT, and (b) subjects are gazing at the screen target.

set features two types of gaze targets: screen targets and 3D floating targets (FT). The controlled environment ensures consistency in lighting, head poses, and gaze directions, making it suitable for both 2D and 3D gaze estimation tasks. Despite its strengths in controlled settings and support for 3D gaze data, the data set's limitations include a small number of subjects and videos, which may restrict its generalizability to more diverse and unconstrained scenarios. Figure 5 provides sample images from the EYEDIAP data set.

The MPIIFaceGaze data set (Zhang *et al.*, 2017a) is a subset of the MPIIGaze data set (Zhang *et al.*, 2015) that is further processed and extracted, providing the ability to estimate gaze from facial images. The MPIIFaceGaze data set is a popular benchmark in gaze estimation research, containing 37 667 images with a resolution of 448 × 448 pixels. The images were collected from everyday life photos taken with laptops, showcasing natural variations in lighting, head pose, and gaze direction. As shown in Figure 6, this data set provides data from 15 subjects, representing diverse real-world gaze patterns and head poses, making it valuable for studying gaze estimation in unconstrained environments. While the data set's strengths include its naturalistic data and ease of use for 3D gaze and head pose estimation, it has notable limitations, such as its small size, limited number of subjects, and the absence of extreme head poses, which may restrict its applicability to more challenging or diverse scenarios.

The ETH-XGaze data set (Zhang *et al.*, 2020) is a comprehensive resource for gaze estimation, designed to tackle challenging scenarios, including extreme head poses. It consists of 11 million high-resolution images (6000 × 4000 pixels) captured in a controlled laboratory environment. The data set features subjects in a variety of extreme head postures, different observation angles, 18 distinct head positions, and diverse lighting conditions, ensuring a wide range of variations for robust model training and evaluation, as illustrated in Figure 7. The data set's vast size, high resolution, and coverage of extreme head poses make it particularly valuable for developing models that excel in both normal and extreme conditions. However, its reliance on a controlled laboratory environment may limit its generalizability to real-world scenarios. Despite this, ETH-XGaze remains one of the most extensive and challenging data sets available, enabling the development of SOTA gaze estimation models.

We selected the ETH-XGaze data set for developing a large neural network based on transformer because its strengths surpass the previous data sets, such as MPIIFaceGaze and EYEDIAP in several critical aspects. As shown in Table 1, ETH-XGaze offers an extensive data set of 11 million high-resolution images, making it ideal for training large neural networks that require substantial data to optimize their numerous parameters. Unlike MPIIFaceGaze, which lacks extreme head poses, and EYEDIAP, which is limited in size and diversity, ETH-XGaze includes a comprehensive range of head orientations (±80° in yaw and pitch) and diverse lighting conditions, enabling robust model development for both normal and extreme scenarios. The distribution of head postures for each data set is shown in Figure 8. Additionally, the high-resolution images and precise annotations in ETH-XGaze support the extraction of detailed features necessary for achieving SOTA performance. These strengths make ETH-XGaze the most suitable choice among the three data sets for training a large neural network that excels in challenging gaze estimation tasks.

4.2 Training details

For the EYEDIAP and MPIIGaze data sets, we applied the preprocessing method outlined in Cheng *et al.* (2024) to derive eye region landmarks from the raw data using the Dlib face recognition library (Kazemi & Sullivan, 2014). For the ETH-XGaze data set, we directly used the landmarks provided in Cai *et al.* (2021) to obtain eye coordinates, extracting the corresponding data as input for the network. All three data sets were trained with the same parameters: an input size of 224 × 224, a batch size of 24, and 29 training epochs using a learning rate strategy based on cosine annealing. The initial learning rate was set to 0.0001. All work was implemented in the PyTorch framework, using Distributed Data Parallel for distributed training along with synchronized BN. The training was conducted on 8 NVIDIA RTX 3090 GPUs.

4.3 Experiment results

Figure 9 presents random visualizations of the prediction results for the three data sets. These visualizations showcase the model's predictions on a sample of each data set, enabling an intuitive assessment of the model's performance.

For the ETH-XGaze data set, the data are divided into 80 subjects for training and 15 subjects for testing, making it well suited for deep learning models that require large amounts of data sets. To evaluate model performance, 70 subjects from the training set were used for training, while the remaining 10 subjects were set aside for validation. A validation process was conducted to determine the model that achieved the best performance on the validation set. The selected model was then evaluated on the 15 test subjects to assess its generalization capability.

The proposed method achieves a 7.3% improvement over the SOTA approach on the ETH-XGaze data set, as shown in Table 2, where a smaller angular error value indicates greater accuracy and model effectiveness. The ETH-XGaze data set includes a broad range of head postures, and the results demonstrate that the proposed method effectively reduces gaze estimation deviations caused by extreme head positions, achieving top-tier performance. To illustrate the robustness of our

Downloaded from https://academic.oup.com/jcde/article/12/3/115/8003774 by guest on 08 April 2026

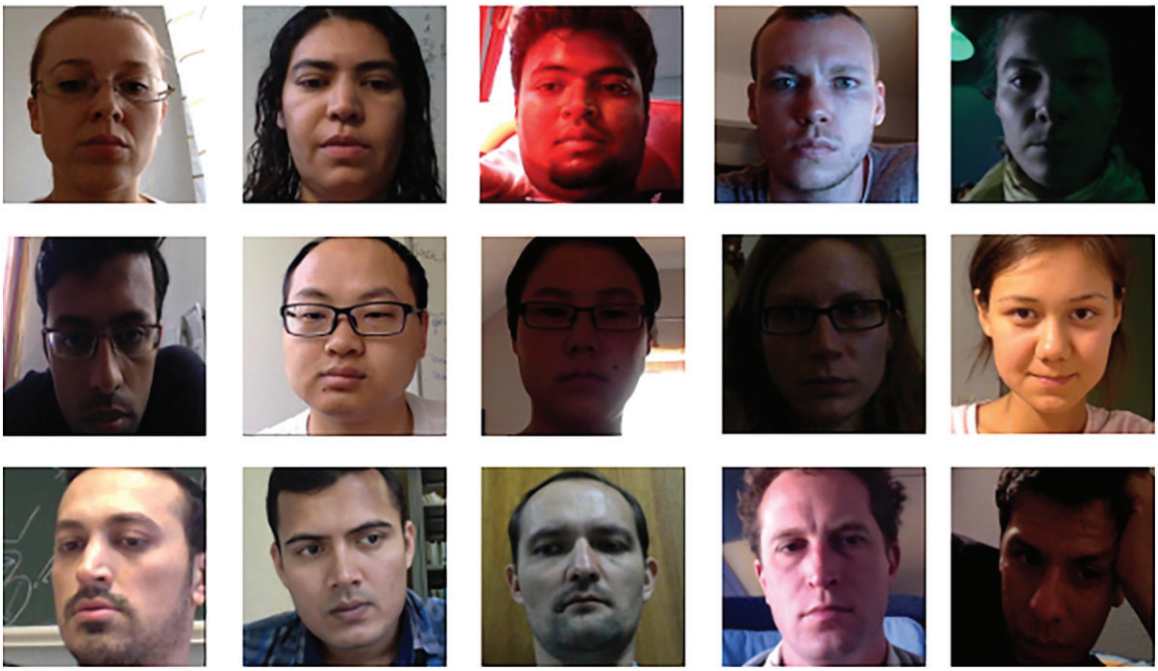

Figure 6: Sample images of 15 subjects from the MPIIFaceGaze data set.

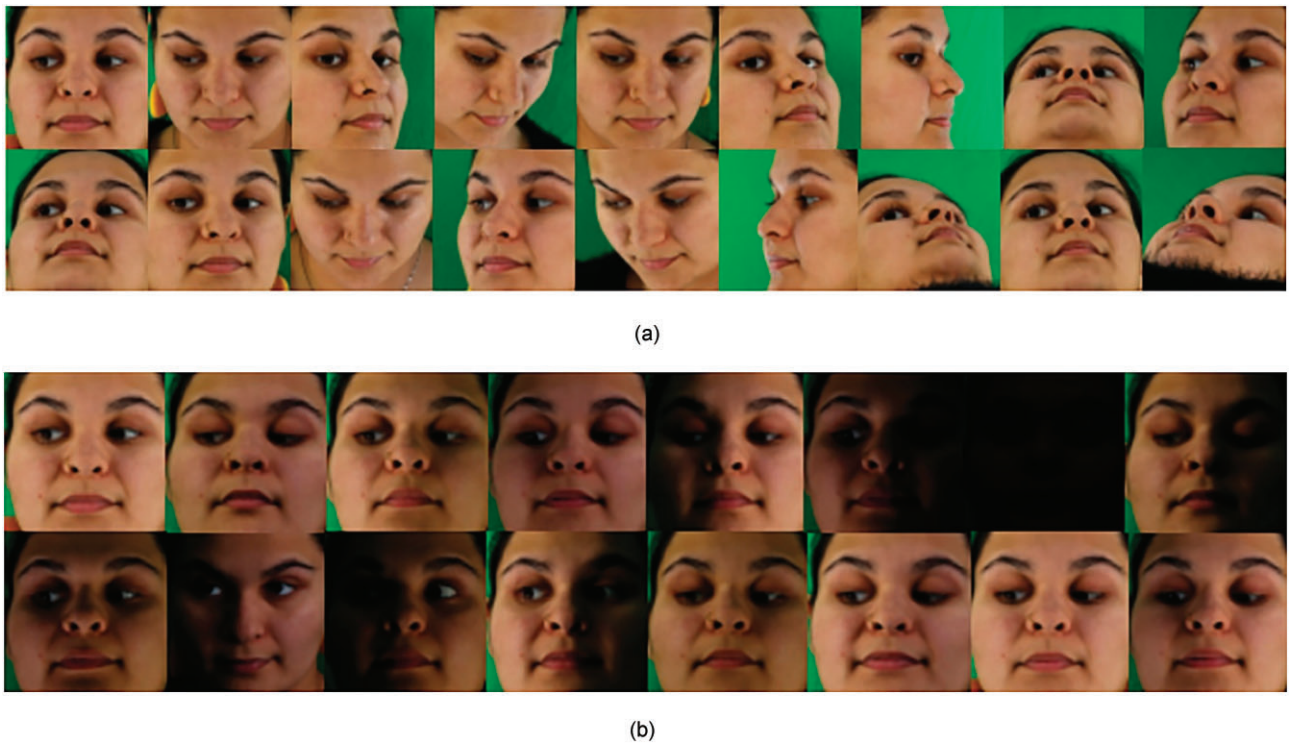

Figure 7: Sample images from the ETH-XGaze data set: (a) images captured by 18 different camera views, and (b) images captured under various lighting conditions.

method more clearly, we separately display gaze estimation results on the validation set subject images in Figure 10. These images feature 18 distinct head postures, highlighting that our network consistently maintains strong performance, even under extreme head postures. Additionally, to further validate robustness, we present gaze estimation results for 18 different head postures captured in low-light conditions using the ETH-XGaze data set, as shown in Figure 11. These results indicate that our method performs effectively across varied conditions, demonstrating resilience in low-light environments.

For the EYEDIAP data set, we extracted a total of 16 674 images from the screen target footages of 14 subjects for use in the experiment. To evaluate model performance on this data set, a

Downloaded from https://academic.oup.com/jcde/article/12/3/115/8003774 by guest on 08 April 2026

Table 1: Comparison of the three gaze estimation data sets: MPIIFaceGaze, EYEDIAP, and ETH-XGaze, highlighting differences in data set size, head pose coverage, environment, and suitability for various applications.

Feature	EYEDIAP	MPIIFaceGaze	ETH-XGaze
Number of subjects	16	15	80 (training), 15 (testing)
Data set size	94 videos (237 minutes)	45 000 images	11 million images
Head pose coverage	Moderate	Limited to natural poses	Extensive (±80° yaw/pitch)
Lighting variations	Controlled	Natural	Extensive
Environment	Controlled (lab setting)	Uncontrolled (real-world)	Controlled (lab setting)
Gaze type	2D and 3D	3D	3D
Annotations	Detailed (3D gaze/head)	Basic	High quality

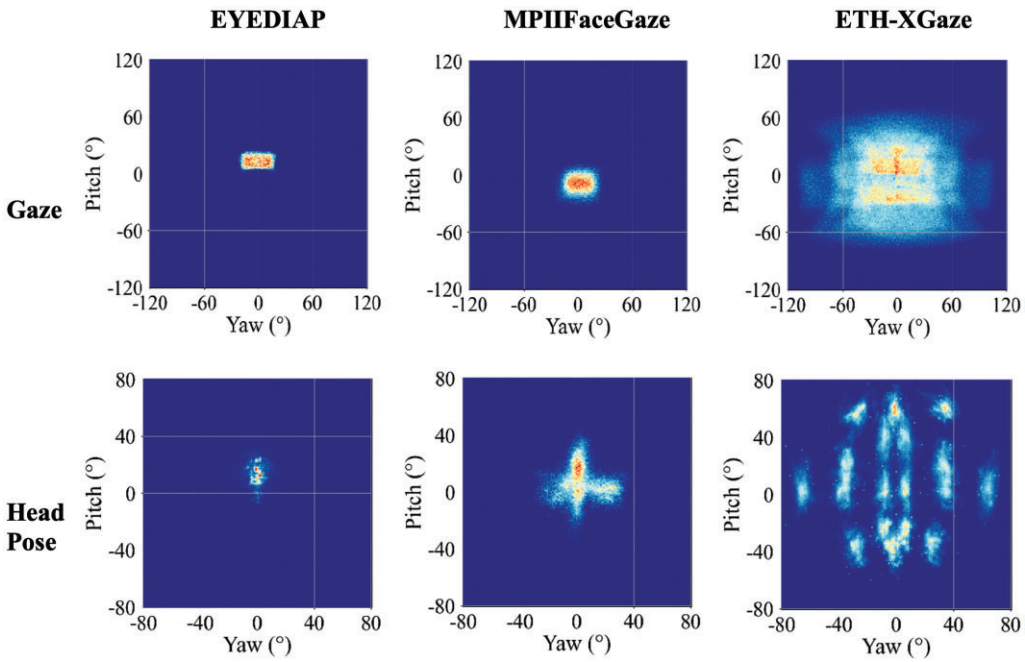

Figure 8: Distribution of gaze directions (top row) and head pose (bottom row) in the three different data sets (Cheng *et al.*, 2024): EYEDIAP (first column), MPIIGaze (second column), and ETH-XGaze (third column). The top row (±120° in yaw and pitch) represents the gaze distribution, while the bottom row (±80° in yaw and pitch) illustrates the head pose distribution. Notably, ETH-XGaze spans a substantially broader range of both gaze and head pose compared to EYEDIAP and MPIIGaze.

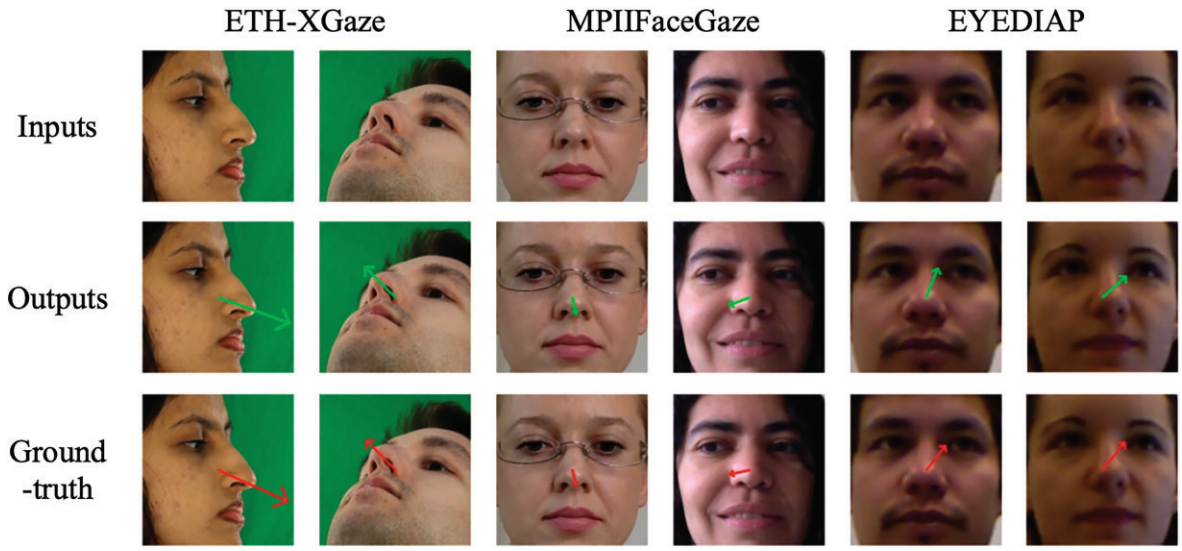

Figure 9: Examples of gaze estimation results. The first row shows the input images, the second row displays the predictions made by the proposed method, and the third row presents the ground truth.

Downloaded from https://academic.oup.com/jcde/article/12/3/115/8003774 by guest on 08 April 2026

Table 2: Comparison with SOTA methods on the ETH-XGaze data set. The second and third columns indicate whether each method used eye or face images as input. The fourth column presents the evaluation results. The evaluation metric is angular error, where smaller values indicate better model performance. The highest performance value is highlighted in bold.

Methods	Eye Images	Face Images	Gaze Error (°)
ResNet-50 (Baseline) (Zhang *et al.*, 2020)		✓	4.50
Dilated-Net (Chen & Shi, 2018)	✓		4.79
Pure-Gaze (Cheng *et al.*, 2022)		✓	4.52
LatentGaze (Lee *et al.*, 2022)		✓	3.94
iTracker MHSA (Cai *et al.*, 2021)	✓	✓	3.54
GazeSymCAT (Ours)	✓	✓	**3.28**

four-fold cross-validation approach was empolyed. The subjects were divided into four clusters, and for each fold, one cluster was designated as the test set while the remaining three clusters were used for training, ensuring that all subjects were tested once. This methodology, consistent with previous studies (Chen & Shi, 2018; Cheng *et al.*, 2020a; Cheng & Lu, 2022; Wang *et al.*, 2023a), provides a robust and reliable framework for evaluating model performance.

For the MPIIFaceGaze data set, model performance is evaluated using a leave-one-subject-out cross-validation approach, as outlined in previous research (Chen & Shi, 2018; Cheng *et al.*, 2020a; Cheng & Lu, 2022; Wang *et al.*, 2023a). In this method, data from one subject are excluded for testing, while the remaining 14 subjects are used for training. This process is repeated for all 15 subjects, ensuring each serves as the test set once. The average performance metric, such as angular error, across all iterations provides a comprehensive and robust evaluation of the model's generalization ability.

Table 3 compares our method with SOTA methods on the EYEDIAP and MPIIFaceGaze data sets. Notably, GazeTR (Cheng *et al.*, 2020a) is a transformer-based model, which uses a CNN to extract features and feed the resulting feature maps into a transformer, while Dilated-Net (Chen & Shi, 2018) and CA-Net (Cheng *et al.*, 2020a) are CNN-based methods. Unlike other models, we did not use pretrained models. The table shows that the proposed GazeSymCAT approach is competitive with existing SOTA methods. Given that transformers generally require large data sets for training, the effectiveness of our approach is particularly noteworthy, considering the limited size of the EYEDIAP and MPIIFaceGaze data sets and the lack of data with extreme head poses. The next chapter will provide further validation and detailed explanations.

4.4 Ablation study

4.4.1 *Feature extraction module*

Table 4 presents the results of the ablation study for the feature extraction module. First, we ran experiments using only the central part of ResNet50, with the rest of the network maintaining the same structure as GazeSymCAT without implementing the attention branches. This configuration resulted in an error of 3.45° on the ETH-XGaze data set and 4.19° on the MPIIFaceGaze data set. Next, we modified the ResNet50 structure to include a channel attention mechanism while keeping the network configuration consistent. We selected two widely used channel attention mechanisms for comparison. SeNet (Hu *et al.*, 2018) yielded errors of 3.39° and 4.13° on the ETH-XGaze and MPIIFaceGaze data sets, respectively, while Convolutional Block Attention Module (CBAM) (Woo *et al.*, 2018) recorded errors of 3.37° and 4.17°. The proposed GazeSymCAT outperformed both mainstream channel attention

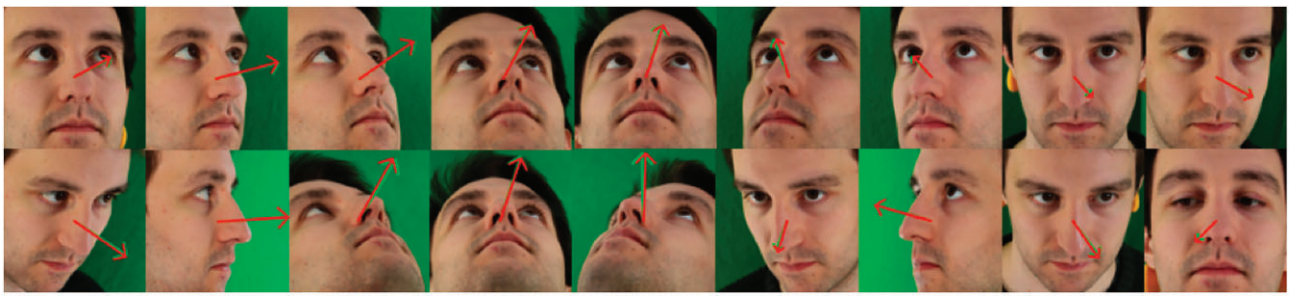

Figure 10: Examples of gaze estimation results under extreme head postures. Red lines represent the ground truth gaze, while green lines indicate the predicted gaze. The images were captured from 18 different camera views.

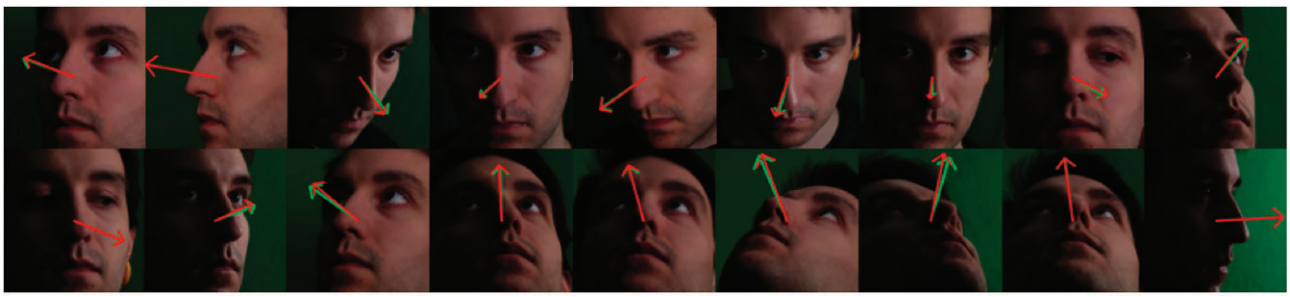

Figure 11: Examples of gaze estimation results under extreme head poses. Red lines represent the ground truth gaze, while green lines indicate the predicted gaze. The images were taken from 18 different camera views.

Downloaded from https://academic.oup.com/jcde/article/12/3/115/8003774 by guest on 08 April 2026

Table 3: Comparison with SOTA methods on the MPIIFaceGaze and EYEDIAP data sets. The second and third columns specify whether each method used eye or face images as input. The fourth column provides the evaluation results, with angular error as the metric, where smaller values indicate better performance. The highest performance value is highlighted in bold.

Methods	Eye Images	Face Images	Gaze Error (°)	
			MPIIFaceGaze	EYEDIAP
Dilated-Net (Chen & Shi, 2018)	✓		4.42	6.19
RT-Gene (Fischer *et al.*, 2018)	✓	✓	4.31	5.9
Gaze360 (Kellnhofer *et al.*, 2019)	✓	✓	4.14	5.36
CA-Net (Cheng *et al.*, 2020a)	✓	✓	4.27	5.27
GazeTR (Cheng *et al.*, 2020a)		✓	4.18	5.33
GazeCaps (Wang *et al.*, 2023a)		✓	**4.06**	**5.10**
GazeSymCAT (Ours)	✓	✓	4.11	5.13

Table 4: Ablation study demonstrating the effectiveness of the DCA block. Senet was chosen as the control experiment to evaluate and identify the most suitable channel attention mechanisms. The highest performance value is highlighted in bold.

Methods	Gaze Error (°)	
	ETH-XGaze	MPIIFaceGaze
ResNet50 (He *et al.*, 2015)	3.45	4.19
SeNet (Hu *et al.*, 2018)	3.39	4.13
CBAM (Woo *et al.*, 2018)	3.37	4.17
GazeSymCAT (Ours)	**3.28**	**4.11**

mechanisms in our experiments, achieving errors of 3.28° and 4.11°, respectively.

The results demonstrate the effectiveness of the ResNet50 backbone with the integrated channel attention mechanism proposed in this study. It shows that backbone networks incorporating mainstream channel attention mechanisms can extract significantly richer information compared to using the ResNet50 backbone alone. However, when these attention mechanisms are restricted to adjacent convolutional layers, information extraction may be limited. In contrast, our modular design enhances feature extraction and minimizes potential bias in gaze estimation due to information loss.

4.4.2 *Feature fusion module*

We analysed the effectiveness of the attention-based feature fusion module using two input methods: face-only and face + eye images. Accurate gaze estimation requires eye data, including information on eye movements and pupil positioning. Experiments conducted on the ETH-XGaze and MPIIFaceGaze data sets yielded consistent results, as shown in Table 5. Notably, for gaze estimation on the MPIIFaceGaze data set, we observed nearly equivalent performance to the case without the 1NF module when using only the frontal input.

For the ETH-XGaze data set, the differences in results are even more pronounced. In this data set, the maximum head pose in the horizontal (around the yaw axis) and vertical (around the pitch axis) directions within the camera coordinate system reaches (±80°, ±80°). In contrast, in the MPIIFaceGaze data set, the maximum head pose and gaze range in the horizontal (yaw axis) and vertical (pitch axis) directions is (±15°, ±30°). Therefore, accurately capturing a complete eye image under extreme head poses is challenging.

The MPIIFaceGaze data set provides comprehensive data for both eyes. In this data set, gaze estimation accuracy is significantly reduced when using only frontal input compared to the combined input of eye and face images. Although the performance gains of the proposed model on the MPIIFaceGaze data set may not be as substantial as on the ETH-XGaze data set, the results from ETH-XGaze clearly demonstrate the effectiveness of the proposed architecture.

Figure 12 displays the attention maps for three methods on the ETH-XGaze data set. As shown, with face-only input, the network primarily focuses on the face region; however, the lack of fine-grained eye features limits gaze estimation accuracy. Without the feature fusion module, the network often focuses on irrelevant features, leading to a significant decline in gaze estimation performance under extreme head postures. The feature fusion module addresses this issue, as illustrated in the heatmap: when one eye is not fully visible, the network shifts its focus to the other eye region, allowing it to estimate gaze while accounting for head posture and reducing the impact of misleading features.

We visualize the Grad-CAM (Selvaraju *et al.*, 2017) attention maps of three methods across three different data sets, as shown

Table 5: Ablation study evaluating the effectiveness of the feature fusion module. The study includes three cases: Case 1: only face images are used as input, without the feature fusion module. Case 2: both face and eye images are used as input, but the feature fusion module is excluded. Case 3: both face and eye images are used as input, with the feature fusion module included.

Case	Eye	Face	Feature Fusion Module	Gaze Error (°)	
				ETH-XGaze	MPIIFaceGaze
1	✓			3.57	4.5
2	✓	✓		3.55	4.11
3	✓	✓	✓	3.28	4.11

Downloaded from https://academic.oup.com/jcde/article/12/3/115/8003774 by guest on 08 April 2026

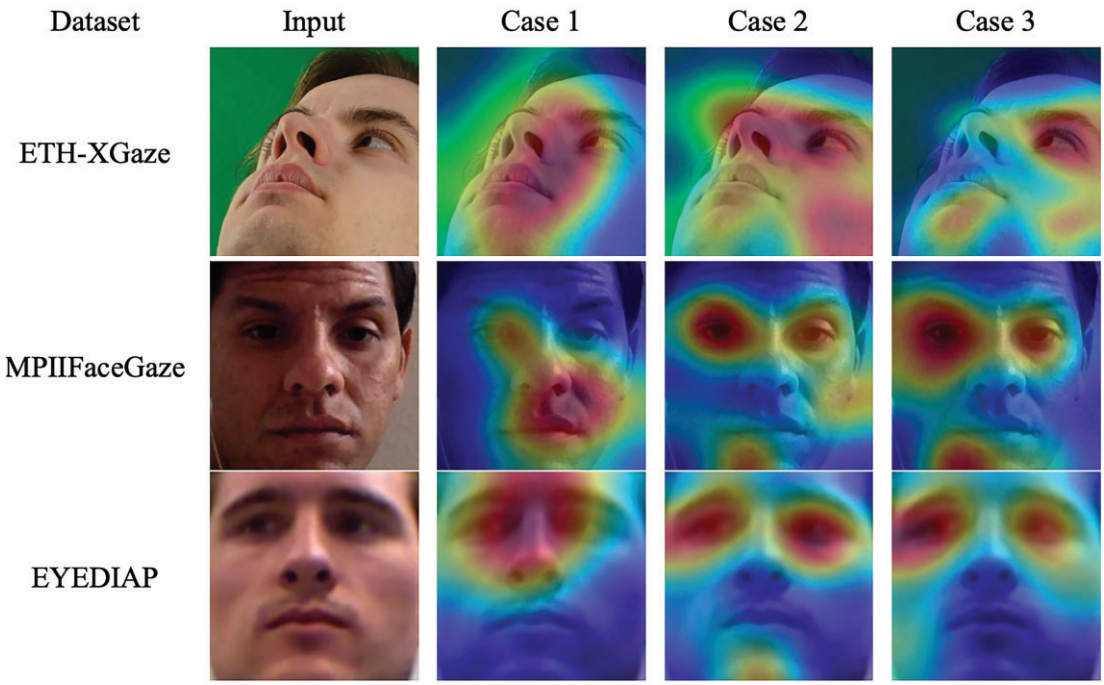

Figure 12: Grad-CAM (Selvaraju *et al.*, 2017) visualization of attention maps corresponding to the three methods outlined in Table 5: Case 1: only face images are used as input, without the feature fusion module. Case 2: both face and eye images are used as input, but the feature fusion module is excluded. Case 3: both face and eye images are used as input, with the feature fusion module included.

in Figure 12. Specifically, we consider: (1) face-only input, (2) face plus eye input without the feature fusion module, and (3) face plus eye input with the feature fusion module. When only the face region is provided, the network predominantly focuses on a contiguous facial area, restricting it from capturing finer eye details and thus limiting gaze estimation accuracy. In contrast, when one eye is partially or completely occluded (as frequently observed in the ETH-XGaze data set under extreme head postures), the network dynamically shifts its attention to the other, more visible eye region. This behaviour underscores the importance of robust feature fusion: without the feature fusion module, the model often attends to irrelevant features and suffers a noticeable drop in performance. By contrast, incorporating feature fusion enables more precise gaze estimation, as the network compensates for occlusions and aligns attention with the critical eye region while appropriately accounting for head pose variations.

To further assess the effectiveness of the feature fusion module, we conducted additional tests using the ETH-XGaze data set. We separately calculated the percentage error both with and without the feature fusion module, keeping the rest of the model configurations consistent. We also calculated the standard deviation of gaze error across the entire validation set. Table 6 shows that adding the feature fusion module improves gaze estimation angle errors greater than 5° and reduces the standard deviation. Since test set labels are not publicly available for the ETH-XGaze data set, testing was conducted on the validation set only. The results presented in Table 6 are based on the validation set. Our module effectively reduces the impact of incomplete eye features compared to extreme head postures, thus minimizing the influence of incorrect features. Both error percentage results and heat maps demonstrate that the feature fusion module mitigates issues associated with extreme head postures.

Table 6: Performance comparison of the model with and without the feature fusion module. The first metric represents the percentage of cases where the gaze estimation error exceeds 5°. The second metric is the standard deviation of angular errors in gaze direction.

		Gaze Error (°)	
Case	**Feature Fusion Module**	**Error > 5°**	**Standard Deviation**
1		27%	3.12
2	✓	21%	2.26

5. Conclusions

In this study, we developed GazeSymCAT, a self- and cross-attention-based deep neural network designed for effective gaze estimation even, even under extreme head postures. The feature extraction module employs a modified ResNet with DCA to efficiently extract features from images of the face and both eyes. Furthermore, the feature fusion module integrates three feature maps extracted by the feature extraction module as input to the encoder and incorporates object queries as input to the decoder. It then combines the hidden states of the encoder and decoder using symmetric cross-attention and self-attention to capture contextual information. This design enables the decoder to produce hidden states optimized for gaze estimation. In our experiments on the ETH-XGaze data set—a recent, large-scale data set with diverse head posture variations—GazeSymCAT demonstrated superior performance compared to existing models. Additionally, it achieved comparable results on the relatively smaller MPIIFaceGaze and EYEDIAP data sets showcasing its robustness and adaptability across different data sets.

Downloaded from https://academic.oup.com/jcde/article/12/3/115/8003774 by guest on 08 April 2026

While GazeSymCAT has shown strong performance, future work will focus on further improving its generalization ability to real-world scenarios by incorporating more diverse and unconstrained data sets. Additionally, optimizing the model's efficiency to reduce computational and memory requirements will be explored to enable deployment in real-time applications, such as driver monitoring systems and AR/VR devices. Expanding the framework to include multimodal inputs, such as depth information or temporal dynamics, may also enhance the model's capability to handle complex gaze estimation tasks across varied environments.

Conflicts of Interest

The authors declare no conflict of interest.

Author Contributions

Yupeng Zhong (Conceptualization, Methodology, Software, Writing—original draft), and Sang Hun Lee (Supervision, Writing—review & editing, Funding acquisition)

Acknowledgments

This work was supported by the National Research Foundation of Korea (NRF) grant funded by the Ministry of Science and ICT (MSIT) of the Korea government (No. 2020R1A2C1102767). Additionally, it was supported by the Artificial Intelligence Industrial Convergence Cluster Development Project funded by the Ministry of Science and ICT (MSIT, Korea) and Gwangju Metropolitan City.

References

Andrist, S., Tan, X. Z., Gleicher, M., & Mutlu, B. (2014). Conversational gaze aversion for humanlike robots. *Proceedings of the 2014 ACM/IEEE International Conference on Human-Robot Interaction*, pp. 25–32. https://doi.org/10.1145/2559636.2559666.

Cai, X., Chen, B., Zeng, J., Zhang, J., Sun, Y., Wang, X., Ji, Z., Liu, X., Chen, X., & Shan, S. (2021). Gaze estimation with an ensemble of four architectures, *preprint arXiv:2107.01980*. https://doi.org/10.48550/arXiv.2107.01980.

Carion, N., Massa, F., Synnaeve, G., Usunier, N., Kirillov, A., & Zagoruyko, S. (2020). End-to-end object detection with transformers. *Proceedings of the European Conference on Computer Vision*, pp. 213–229. https://doi.org/10.1007/978-3-030-58452-8_13.

Castner, N., Kuebler, T. C., Scheiter, K., Richter, J., Eder, T., Hüttig, F., Keutel, C., & Kasneci, E. (2020). Deep semantic gaze embedding and scanpath comparison for expertise classification during OPT viewing. *Proceedings of the ACM Symposium on Eye Tracking Research and Applications*, pp. 1–10. https://doi.org/10.1145/3379155.3391320.

Chen, Z., & Shi, B. E. (2018). Appearance-based gaze estimation using dilated-convolutions. *Asian Conference on Computer Vision*, pp. 309–324. https://doi.org/10.1007/978-3-030-20876-9_20.

Cheng, Y., Bao, Y., & Lu, F. (2022). PureGaze: purifying gaze feature for generalizable gaze estimation. *Proceedings of the AAAI Conference on Artificial Intelligence*, Vol. **36**, pp. 436–443. https://doi.org/10.1609/aaai.v36i1.19921.

Cheng, Y., Huang, S., Wang, F., Qian, C., & Lu, F. (2020a). A coarse-to-fine adaptive network for appearance-based gaze estimation. *Proceedings of the AAAI Conference on Artificial Intelligence*, Vol. **34**, pp. 10623–10630. https://doi.org/10.1609/aaai.v34i07.6636.

Cheng, Y., & Lu, F. (2022). Gaze estimation using transformer. *Proceedings of the 26th International Conference on Pattern Recognition (ICPR)*, pp. 3341–3347. https://doi.org/10.1109/ICPR56361.2022.9956687.

Cheng, Y., & Lu, F. (2023). DVgaze: Dual-view gaze estimation. *Proceedings of the IEEE/CVF International Conference on Computer Vision*, pp. 20632–20641. https://doi.org/10.1109/ICCV51070.2023.01886.

Cheng, Y., Lu, F., & Zhang, X. (2018). Appearance-based gaze estimation via evaluation-guided asymmetric regression. *Proceedings of the European Conference on Computer Vision (ECCV)*, pp. 100–115. https://doi.org/10.1007/978-3-030-01264-9_7.

Cheng, Y., Wang, H., Bao, Y., & Lu, F. (2024). Appearance-based gaze estimation with deep learning: a review and benchmark. *IEEE Transactions on Pattern Analysis and Machine Intelligence*, **46**, 7509–7528. https://doi.org/10.1109/TPAMI.2024.3393571.

Cheng, Y., Zhang, X., Lu, F., & Sato, Y. (2020b). Gaze estimation by exploring two-eye asymmetry. *IEEE Transactions on Image Processing*, **29**, 5259–5272. https://doi.org/10.1109/TIP.2020.2982828.

Cho, S. W., Lim, Y. H., Seo, K. M., & Kim, J. (2024). Integration of eye-tracking and object detection in a deep learning system for quality inspection analysis. *Journal of Computational Design and Engineering*, **11**, 158–173. https://doi.org/10.1093/jcde/qwae042.

Dosovitskiy, A. (2020). An image is worth 16×16 words: Transformers for image recognition at scale, *preprint arXiv:2010.11929*. https://doi.org/10.48550/arXiv.2010.11929.

Eom, H., & Lee, S. H. (2015). Human-automation interaction design for adaptive cruise control systems of ground vehicles. *Sensors*, **15**, 13916–13944. https://doi.org/10.3390/s150613916.

Eom, H., & Lee, S. H. (2022). Mode confusion of human–machine interfaces for automated vehicles. *Journal of Computational Design and Engineering*, **9**, 1995–2009. https://doi.org/10.1093/jcde/qwac088.

Fischer, T., Chang, H. J., & Demiris, Y. (2018). RT-GENE: real-time eye gaze estimation in natural environments. *Proceedings of the European Conference on Computer Vision (ECCV)*, pp. 334–352. https://doi.org/10.1007/978-3-030-01249-6_21.

Funes Mora, K. A., Monay, F., & Odobez, J. M. (2014). EYEDIAP: a database for the development and evaluation of gaze estimation algorithms from RGB and RGB-D cameras. *Proceedings of the Symposium on Eye Tracking Research and Applications*, pp. 255–258. https://doi.org/10.1145/2578153.2578190.

Ghosh, S., Dhall, A., Hayat, M., Knibbe, J., & Ji, Q. (2023). Automatic gaze analysis: A survey of deep learning based approaches. *IEEE Transactions on Pattern Analysis and Machine Intelligence*, **46**, 61–84. https://doi.org/10.1109/TPAMI.2023.3321337.

He, K., Zhang, X., Ren, S., & Sun, J. (2016). Deep residual learning for image recognition. *Proceedings of the IEEE Conference on Computer Vision and Pattern Recognition*, pp. 770–778. https://doi.org/10.48550/arXiv.1512.03385.

He, Q., Hong, X., Chai, X., Holappa, J., Zhao, G., Chen, X., & Pietikäinen, M. (2015). OMEG: Oulu multi-pose eye gaze dataset. *Image Analysis. SCIA 2015. Lecture Notes in Computer Science*, vol. **9127**. https://doi.org/10.1007/978-3-319-19665-7_35.

Hu, J., Shen, L., & Sun, G. (2018). Squeeze-and-excitation networks. *Proceedings of the IEEE Conference on Computer Vision and Pattern Recognition*, pp. 7132–7141. https://doi.org/10.1109/CVPR.2018.00745.

Huang, Q., Veeraraghavan, A., & Sabharwal, A. (2017). TabletGaze: dataset and analysis for unconstrained appearance-based gaze estimation in mobile tablets. *Machine Vision and Applications*, **28**, 445–461. https://doi.org/10.1007/s00138-017-0852-4.

Downloaded from https://academic.oup.com/jcde/article/12/3/115/8003774 by guest on 08 April 2026

Jindal, S., & Manduchi, R. (2023). Contrastive representation learning for gaze estimation. *Annual Conference on Neural Information Processing Systems*, pp. 37–49. https://doi.org/10.48550/arXiv.2210.13404.

Kazemi, V., & Sullivan, J. (2014). One millisecond face alignment with an ensemble of regression trees. *Proceedings of the IEEE Conference on Computer Vision and Pattern Recognition*, pp. 1867–1874. https://doi.org/10.1109/CVPR.2014.241.

Kellnhofer, P., Recasens, A., Stent, S., Matusik, W., & Torralba, A. (2019). Gaze360: Physically unconstrained gaze estimation in the wild. *Proceedings of the IEEE/CVF International Conference on Computer Vision*, pp. 6912–6921. https://doi.org/10.48550/arXiv.1910.10088.

Kerr-Gaffney, J., Harrison, A., & Tchanturia, K. (2019). Eye-tracking research in eating disorders: a systematic review. *International Journal of Eating Disorders*, **52**, 3–27. https://doi.org/10.1002/eat.22998.

Konrad, R., Angelopoulos, A., & Wetzstein, G. (2020). Gaze-contingent ocular parallax rendering for virtual reality. *ACM Transactions on Graphics (TOG)*, **39**, 1–12. https://doi.org/10.1145/3361330.

Lee, I., Yun, J. S., Kim, H. H., Na, Y., & Yoo, S. B. (2022). LatentGaze: cross-domain gaze estimation through gaze-aware analytic latent code manipulation. *Proceedings of the Asian Conference on Computer Vision*, pp. 3379–3395. https://doi.org/10.48550/arXiv.2209.10171.

Lee, S. H., & Yoon, S. O. (2020). User interface for in-vehicle systems with on-wheel finger spreading gestures and head-up displays. *Journal of Computational Design and Engineering*, **7**, 700–721. https://doi.org/10.1093/jcde/qwaa052.

Lee, S., Woo, T., & Lee, S. H. (2023). Multi-attention-based soft partition network for vehicle re-identification. *Journal of Computational Design and Engineering*, **10**, 488–502. https://doi.org/10.1093/jcde/qwad014.

Mavely, A. G., Judith, J. E., Sahal, P. A., & Kuruvilla, S. A. (2017). Eye gaze tracking based driver monitoring system. *Proceedings of the 2017 IEEE International Conference on Circuits and Systems (ICCS)*, pp. 364–367. https://doi.org/10.1109/ICCS1.2017.8326022.

Moon, A., Troniak, D. M., Gleeson, B., Pan, M. K., Zheng, M., Blumer, B. A., MacLean, K., & Croft, E. A. (2014). Meet me where I'm gazing: How shared attention gaze affects human-robot handover timing. *Proceedings of the 2014 ACM/IEEE International Conference on Human-Robot Interaction*, pp. 334–341. https://doi.org/10.1145/2559636.2559656.

Murthy, L. R. D., & Biswas, P. (2021). Appearance-based gaze estimation using attention and difference mechanism. *Proceedings of the IEEE/CVF Conference on Computer Vision and Pattern Recognition*, pp. 3143–3152. https://doi.org/10.1109/CVPRW53098.2021.00351.

Oh, O. J., Chang, H. J., & Choi, S. I. (2022). Self-attention with convolution and deconvolution for efficient eye gaze estimation from a full face image. *Proceedings of the IEEE/CVF Conference on Computer Vision and Pattern Recognition*, pp. 4992–5000. https://doi.org/10.1109/CVPRW56347.2022.00547.

Park, S., Spurr, A., & Hilliges, O. (2018). Deep pictorial gaze estimation. *Proceedings of the European Conference on Computer Vision (ECCV)*, pp. 721–738. https://doi.org/10.1007/978-3-030-01261-8_44.

Qin, J., Shimoyama, T., & Sugano, Y. (2022). Learning-by-novel-view-synthesis for full-face appearance-based 3d gaze estimation. *Proceedings of the IEEE/CVF Conference on Computer Vision and Pattern Recognition Workshops*, pp. 4977–4987. https://doi.org/10.1109/CVPRW56347.2022.00546.

Ren, Z., Fang, F., Hou, G., Li, Z., & Niu, R. (2023). Appearance-based gaze estimation with feature fusion of multi-level information elements. *Journal of Computational Design and Engineering*, **10**, 1080–1109. https://doi.org/10.1093/jcde/qwad038.

Selvaraju, R. R., Cogswell, M., Das, A., Vedantam, R., Parikh, D., & Batra, D. (2017). Grad-CAM: Visual explanations from deep networks via gradient-based localization. *Proceedings of the IEEE International Conference on Computer Vision (ICCV)*, pp. 618–626. https://doi.org/10.1109/ICCV.2017.74.

Sitzmann, V., Serrano, A., Pavel, A., Agrawala, M., Gutierrez, D., Masia, B., & Wetzstein, G. (2018). Saliency in VR: How do people explore virtual environments. *IEEE Transactions on Visualization and Computer Graphics*, **24**, 1633–1642. https://doi.org/10.1109/TVCG.2018.2793599.

Sun, L., Lian, Z., Liu, B., & Tao, J. (2023). Efficient multimodal transformer with dual-level feature restoration for robust multimodal sentiment analysis. *IEEE Transactions on Affective Computing*, **15**, 309–325. https://doi.org/10.1109/TAFFC.2023.3274829.

Vaswani, A., Shazeer, N., Parmar, N., Uszkoreit, J., Jones, L., Gomez, A. N., & Polosukhin, I. (2017). Attention is all you need. *Advances in Neural Information Processing Systems*, **30**, 5998–6008. https://arxiv.org/pdf/1706.03762v5.

Wang, H., Oh, J. O., Chang, H. J., Na, J. H., Tae, M., Zhang, Z., & Choi, S. I. (2023a). Gazecaps: Gaze estimation with self-attention-routed capsules. *Proceedings of the IEEE/CVF Conference on Computer Vision and Pattern Recognition*, pp. 2669–2677. https://doi.org/10.1109/CVPRW59228.2023.00267.

Wang, H., Zhang, Z., Cheng, Y., & Chang, H. J. (2023b). High-fidelity eye animatable neural radiance fields for human face. *British Machine Vision Conference*, pp. 1–14. https://proceedings.bmvc2023.org/105/.

Wang, Q., Wu, B., Zhu, P., Li, P., Zuo, W., & Hu, Q. (2020). ECA-net: efficient channel attention for deep convolutional neural networks. *Proceedings of the IEEE/CVF Conference on Computer Vision and Pattern Recognition*, pp. 11534–11542. https://doi.org/10.1109/CVPR42600.2020.01155.

Woo, S., Park, J., Lee, J. Y., & Kweon, I. S. (2018). CBAM: convolutional block attention module. *Proceedings of the European Conference on Computer Vision (ECCV)*, pp. 3–19. https://doi.org/10.1007/978-3-030-01234-2_1.

Xu, P., Sugano, Y., & Bulling, A. (2016). Spatio-temporal modeling and prediction of visual attention in graphical user interfaces. *Proceedings of the 2016 CHI Conference on Human Factors in Computing Systems*, pp. 3299–3310. https://doi.org/10.1145/2858036.2858479.

Yin, P., Zeng, G., Wang, J., & Xie, D. (2024). CLIP-gaze: Towards general gaze estimation via visual-linguistic model. *Proceedings of the AAAI Conference on Artificial Intelligence*, vol. **38**, pp. 6729–6737. https://doi.org/10.1609/aaai.v38i7.28496.

Zhang, X., Park, S., Beeler, T., Bradley, D., Tang, S., & Hilliges, O. (2020). ETH-XGaze: A large scale dataset for gaze estimation under extreme head pose and gaze variation. *Computer Vision–ECCV 2020: 16th European Conference, Glasgow, UK, August 23–28, 2020, Proceedings, Part V 16*, pp. 365–381. https://doi.org/10.1007/978-3-030-58558-7_22.

Zhang, X., Sugano, Y., Fritz, M., & Bulling, A. (2015). Appearance-based gaze estimation in the wild. *Proceedings of the IEEE Conference on Computer Vision and Pattern Recognition*, pp. 4511–4520. https://doi.org/10.1109/CVPR.2015.7299081.

Zhang, X., Sugano, Y., Fritz, M., & Bulling, A. (2017a). It's written all over your face: full-face appearance-based gaze estimation. *Proceedings of the IEEE Conference on Computer Vision and Pattern Recognition Workshops*, pp. 51–60. https://doi.org/10.1109/CVPRW.2017.284.

Downloaded from https://academic.oup.com/jcde/article/12/3/115/8003774 by guest on 08 April 2026

Zhang, X., Sugano, Y., Fritz, M., & Bulling, A. (2017b). MPIIGaze: real-world dataset and deep appearance-based gaze estimation. *IEEE Transactions on Pattern Analysis and Machine Intelligence*, **41**, 162–175. https://doi.org/10.1109/TPAMI.2017.2778103.

Zhao, Y., Chen, J., Zhang, Z., & Zhang, R. (2022). BA-Net: bridge attention for deep convolutional neural networks. *European Conference on Computer Vision*, pp. 297–312. https://doi.org/10.1007/978-3-031-19803-8_18.

Downloaded from https://academic.oup.com/jcde/article/12/3/115/8003774 by guest on 08 April 2026

Received: November 29, 2024. **Revised:** February 1, 2025. **Accepted:** February 1, 2025

© The Author(s) 2025. Published by Oxford University Press on behalf of the Society for Computational Design and Engineering. This is an Open Access article distributed under the terms of the Creative Commons Attribution-NonCommercial License (https://creativecommons.org/licenses/by-nc/4.0/), which permits non-commercial re-use, distribution, and reproduction in any medium, provided the original work is properly cited. For commercial re-use, please contact journals.permissions@oup.com