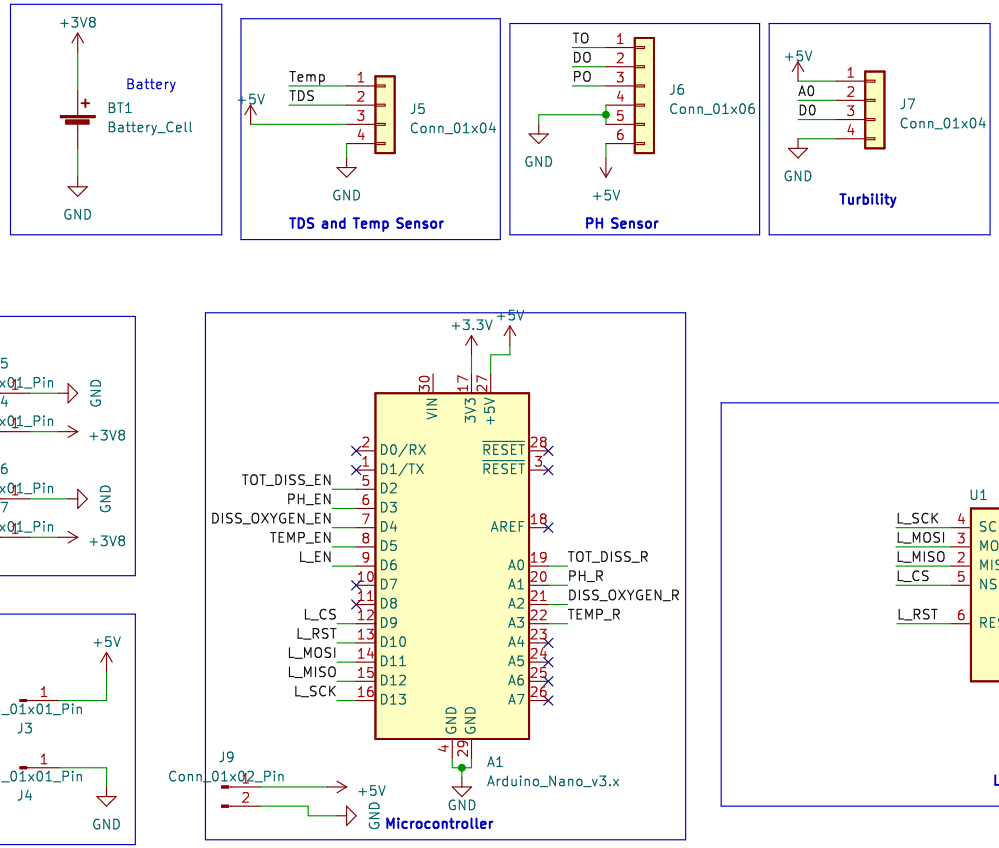

Sheet:
File: System Gateway.kicad_sch

Title:

Size: A4	Date:	Rev:
KiCad E.D.A. kicad (7.0.0)		Id: 1/1