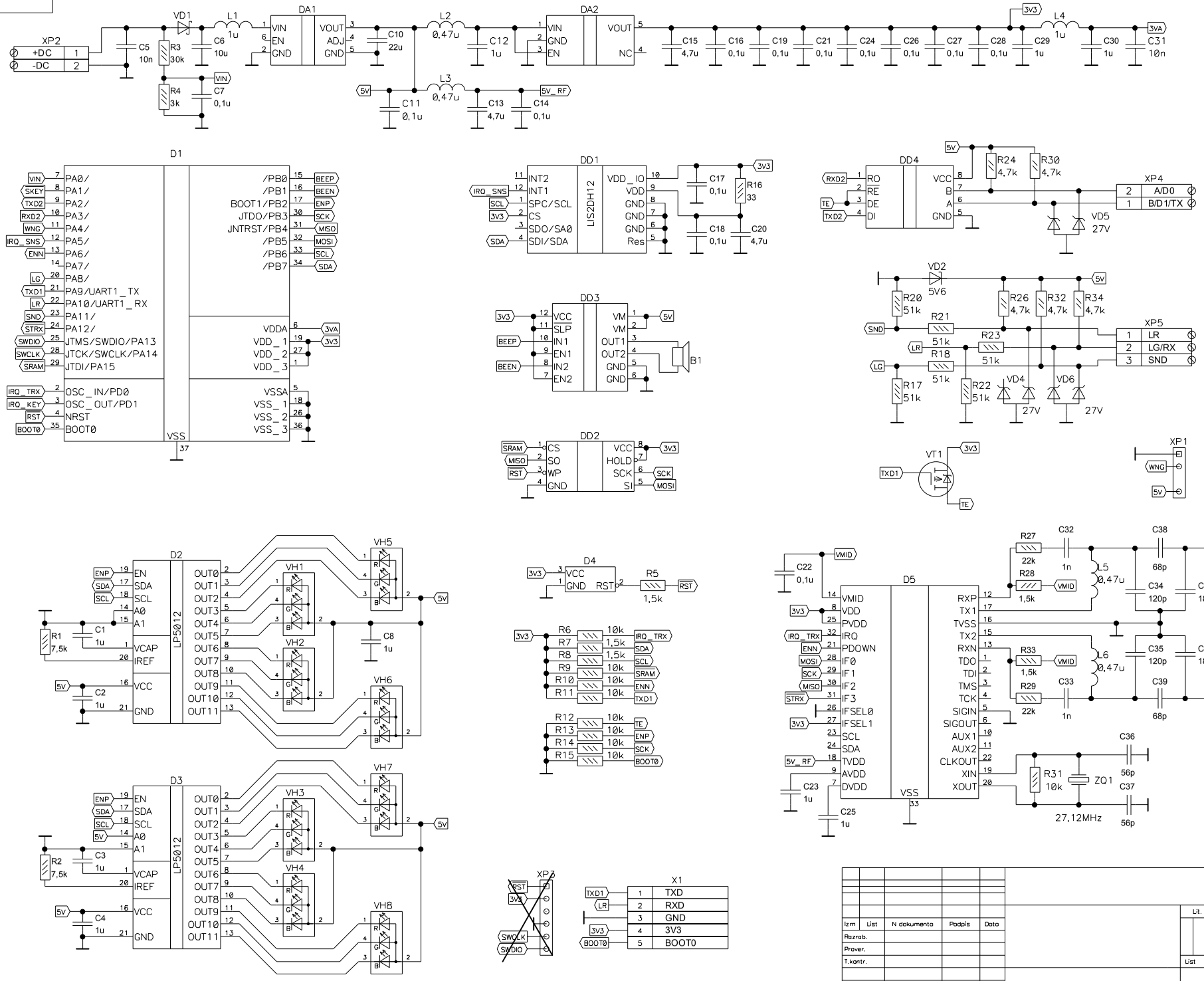
XP2
+DC
-DC
VD1
L1 1u
C5 10n
R3 30k
R4 3k
C6 10u
C7 0,1u
VIN
DA1
VIN
EN
GND
VOUT
ADJ
GND
C10 22u
L2 0,47u
L3 0,47u
C11 0,1u
C12 1u
C13 4,7u
C14 0,1u
5V
5V_RF
DA2
VIN
GND
EN
VOUT
NC
C15 4,7u
C16 0,1u
C19 0,1u
C21 0,1u
C24 0,1u
C26 0,1u
C27 0,1u
C28 0,1u
C29 1u
L4 1u
C30 1u
C31 10n
3V3
3VA
D1
PA0/
PA1/
PA2/
PA3/
PA4/
PA5/
PA6/
PA7/
PA8/
PA9/UART1_TX
PA10/UART1_RX
PA11/
PA12/
JTMS/SWDIO/PA13
JTCK/SWCLK/PA14
JTDI/PA15
OSC_IN/PD0
OSC_OUT/PD1
NRST
BOOT0
/PB0
/PB1
BOOT1/PB2
JTDO/PB3
JNTRST/PB4
/PB5
/PB6
/PB7
VDDA
VDD_1
VDD_2
VDD_3
VSSA
VSS_1
VSS_2
VSS_3
VSS
37
VIN
SKEY
TXD2
RXD2
WNG
IRQ_SNS
ENN
LG
TXD1
LR
SND
STRX
SWDIO
SWCLK
SRAM
IRQ_TRX
IRQ_KEY
RST
BOOT0
BEEP
BEEN
ENP
SCK
MISO
MOSI
SCL
SDA
DD1
LIS2DH12
INT2
INT1
SPC/SCL
CS
SDO/SA0
SDI/SDA
VDD_IO
VDD
GND
Res
C17 0,1u
C18 0,1u
R16 33
C20 4,7u
DD4
RO
RE
DE
DI
VCC
B
A
GND
R24 4,7k
R30 4,7k
VD5 27V
XP4
A/D0
B/D1/TX
DD3
VCC
SLP
IN1
EN1
IN2
EN2
VM
OUT1
OUT2
B1
VD2 5V6
R20 51k
R21 51k
R18 51k
R17 51k
R26 4,7k
R32 4,7k
R34 4,7k
R23 51k
R22 51k
VD4 27V
VD6 27V
XP5
LR
LG/RX
SND
DD2
CS
SO
WP
HOLD
SCK
SI
VT1
XP1
D2
LP5012
EN
SDA
SCL
A0
A1
VCAP
IREF
VCC
GND
OUT0
OUT1
OUT2
OUT3
OUT4
OUT5
OUT6
OUT7
OUT8
OUT9
OUT10
OUT11
R1 7,5k
C1 1u
C2 1u
C8 1u
VH1
VH2
VH5
VH6
D3
R2 7,5k
C3 1u
C4 1u
VH3
VH4
VH7
VH8
D4
VCC
GND
RST
R5 1,5k
R6 10k
R7 1,5k
R8 1,5k
R9 10k
R10 10k
R11 10k
R12 10k
R13 10k
R14 10k
R15 10k
IRQ_TRX
TE
BOOT0
D5
VMID
VDD
PVDD
IRQ
PDOWN
IF0
IF1
IF2
IF3
IFSEL0
IFSEL1
SCL
SDA
TVDD
AVDD
DVDD
VSS
RXP
TX1
TVSS
TX2
RXN
TDO
TDI
TMS
TCK
SIGIN
SIGOUT
AUX1
AUX2
CLKOUT
XIN
XOUT
C22 0,1u
C23 1u
C25 1u
R27 22k
R28 1,5k
C32 1n
L5 0,47u
C38 68p
C34 120p
C40 180p
R35 6R8
R36 6R8
R33 1,5k
R29 22k
C33 1n
L6 0,47u
C35 120p
C41 180p
C39 68p
C36 56p
C37 56p
R31 10k
ZQ1
27,12MHz
XP3
RST
3V3
SWCLK
SWDIO
X1
TXD1
LR
3V3
BOOT0
TXD
RXD
GND
3V3
BOOT0
PERV.PRIMEN.
SPRAV.N
PODP.I.DATA
INV.N DUBL.
VZAM.INV.N
PODP.I.DATA
INV.N PODL.
Izm
List
N dokumenta
Podpis
Datum
Razrab.
Prover.
T.kontr.
N.kontr.
Utv.
Lit.
Masso
Masshtab
List
Listov