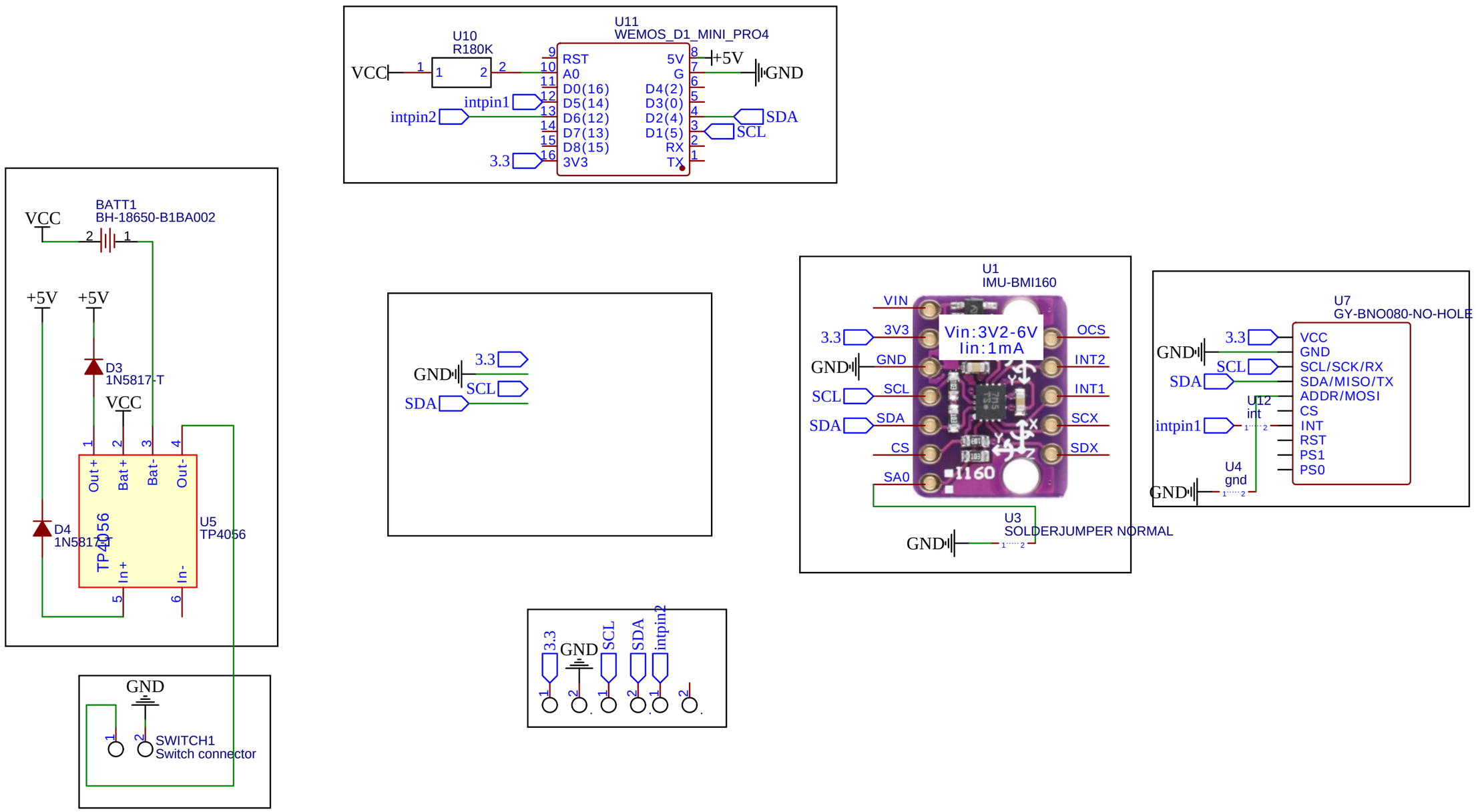

TITLE: Sheet_1		REV: 1.0
嘉立创EDA	Company: Your Company	Sheet: 1/1
	Date: 2023-01-04 Drawn By:	