www.Padasalai.Net www.TrbTnpsc.com
www.surabooks.com

12th STD

PUBLIC EXAMINATION - MARCH 2025

Reg. No.

Part - III

Business Mathematics and Statistics

(with answers)

TIME ALLOWED : 3.00 Hours] [MAXIMUM MARKS : 90

Instructions :

1. Check the question paper for fairness of printing. If there is any lack of fairness, inform the Hall Supervisor immediately.
2. Use **Blue** or **Black** ink to write and underline and pencil to draw diagrams.

PART - I

Note : (i) Answer **all** the questions. **20 × 1 = 20**

(ii) Choose the most appropriate answer from the given **four** alternatives and write the option code and the corresponding answer.

1. $\int \frac{\log x}{x}\, dx, (x > 0)$ is :

(a) $\frac{2}{x^2} + c$ (b) $\frac{1}{2}(\log x)^2 + c$

(c) $-\frac{2}{x^2} + c$ (d) $-\frac{1}{2}(\log x)^2 + c$

2. $\int_0^4 \left(\sqrt{x} + \frac{1}{\sqrt{x}}\right) dx$ is :

(a) $\frac{28}{3}$ (b) $\frac{20}{3}$ (c) $\frac{1}{3}$ (d) $\frac{21}{3}$

3. If $A = \begin{pmatrix} 1 \\ 2 \\ 3 \end{pmatrix}$, then the rank of AA^T is :

(a) 2 (b) 0 (c) 3 (d) 1

4. If A is a matrix of order $n \times n$, the value of |adj A| is :

(a) $|A|^{n-1}$ (b) $|A|^n$ (c) $|A|^{1+n}$ (d) $|A|$

5. If the marginal revenue of a firm is a constant, then the demand function is :

(a) C(x) (b) MR (c) AC (d) MC

6. Area bounded by the curve $y = |x|$ between the limits 0 and 2 is :

(a) 2 sq.units (b) 1 sq.unit

(c) 4 sq.units (d) 3 sq.units

7. The differential equation $\left(\frac{dx}{dy}\right)^3 + 2y^{\frac{1}{2}} = x$ is :

(a) of order 1 and degree 6

(b) of order 2 and degree 1

(c) of order 1 and degree 2

(d) of order 1 and degree 3

8. The integrating factor of $x\frac{dy}{dx} - y = x^2$ is :

(a) $\log x$ (b) $\frac{-1}{x}$

(c) x (d) $\frac{1}{x}$

9. Lagrange's interpolation formula can be used for :

(a) unequal intervals only

(b) both equal and unequal intervals

(c) equal intervals only

(d) none of these

10. $\nabla \equiv$

(a) $1 - E^{-1}$ (b) $1 + E$

(c) $1 + E^{-1}$ (d) $1 - E$

11. Probability which explains x is equal to or less than particular value is classified as :

(a) marginal probability

(b) discrete probability

(c) continuous probability

(d) cumulative probability

enquiry@surabooks.com Ph:8124201000 / 8124301000
Kindly Share Your Study Materials to Our Email Id - padasalai.net@gmail.com

www.Padasalai.Net www.TrbTnpsc.com
www.surabooks.com

12. $E[X - E(X)]^2$ is :
(a) V(X) (b) E(X)
(c) S.D(X) (d) $E(X^2)$

13. If the parameters of a binomial distribution B(n, p) mean = 4 and variance $= \frac{4}{3}$, the probability, $P(X \geq 5)$ is equal to :
(a) $\left(\frac{1}{3}\right)^6$ (b) $\left(\frac{2}{3}\right)^6$
(c) $4\left(\frac{2}{3}\right)^6$ (d) $\left(\frac{2}{3}\right)^5\left(\frac{1}{3}\right)$

14. In a binomial distribution, the probability of success is twice as that of failure, then out of 4 trials, the probability of no success is :
(a) $\frac{2}{27}$ (b) $\frac{16}{81}$ (c) $\frac{1}{81}$ (d) $\frac{1}{16}$

15. A …….. is one where each item in the universe has an equal chance of known opportunity of being selected.
(a) statistic (b) parameter
(c) entire data (d) random sample

16. Errors in sampling are of :
(a) four types (b) two types
(c) five types (d) three types

17. A time series is a set of data recorded :
(a) Weekly
(b) Successive points of time
(c) Periodically
(d) all the above

18. _____price index number satisfies both the Time Reversal and Factor Reversal test.
(a) Paache's (b) Fisher's
(c) Laspeyre's (d) None of these

19. Solution for transportation problem using _____method is nearer to an optimal solution.
(a) VAM (b) NWCM
(c) Row Minima (d) LCM

20. The transportation problem is said to be unbalanced if _____.
(a) $m = n$
(b) Total supply ≠ Total demand
(c) $m + n - 1$
(d) Total supply = Total demand

PART - II

Note : Answer **any seven** questions. Question No. **30** is **compulsory.** **7 × 2 = 14**

21. Find the rank of the given matrix
$$\begin{bmatrix} 3 & 1 & -5 & -1 \\ 1 & -2 & 1 & -5 \\ 1 & 5 & -7 & 2 \end{bmatrix}$$

22. Evaluate : $\int \frac{1}{\sin^2 x \cos^2 x} dx$

23. If the marginal revenue function for a commodity is $MR = 9 - 4x^2$, find the demand function.

24. The probability distribution function of a discrete random variable X is :
$$f(x) = \begin{cases} 2k, & x = 1 \\ 3k & x = 3 \\ 4k, & x = 5 \\ 0, & \text{otherwise} \end{cases}$$
where k is some constant, find k

25. Give mathematical form of Assignment problem.

26. If $y = x^3 - x^2 + x - 1$, calculate the values of y for $x = 0, 1, 2, 3, 4, 5$ and form the forward difference table.

27. The mean of Binomial distribution is 20 and standard deviation is 4. Find the parameters of the distribution.

28. In a sample of 400 population from a village, 230 are found to be eaters of vegetarian items and the rest non-vegetarian items. Compute the standard error assuming that both vegetarian and non-vegetarian foods are equally popular in that village.

29. Fit a trend line by the method of freehand method for the given data.

Year	2000	2001	2002	2003	2004	2005	2006	2007
Sales (Tones)	30	46	25	59	40	60	38	65

30. Solve : $(D^2 + 2D + 2)y = 0$

PART - III

Note : Answer **any seven** questions. Question No. **40** is **compulsory.** **7 × 3 = 21**

31. The total cost of 11 pencils and 3 erasers is ₹ 64 and the total cost of 8 pencils and 3 erasers is ₹49. Find the cost of each pencil and each eraser by Cramer's Rule.

enquiry@surabooks.com Ph:8124201000 / 8124301000
Kindly Share Your Study Materials to Our Email Id - padasalai.net@gmail.com

www.Padasalai.Net www.TrbTnpsc.com
www.surabooks.com

32. Evaluate : $\int x \log x dx$

33. Calculate the area bounded by the parabola $y^2 = 4ax$ and its latus rectum.

34. Find the differential equation of the family of curves $y = \frac{a}{x} + b$ where a and b are arbitrary constants.

35. From the following table, find the missing value.

x	2	3	4	5	6
$f(x)$	45.0	49.2	54.1	-	67.4

36. Suppose the probability mass function of the discrete random variable is :

X = x	0	1	2	3
$p(x)$	0.2	0.1	0.4	0.3

What is the value of E $(3X + 2X^2)$?

37. A fair coin is tossed 7 times. Find the probability that exactly 2 heads occur.

38. A die is thrown 9000 times and a throw of 3 or 4 is observed 3240 times. Find the standard error of the proportion for an unbiased die.

39. The research department of Hindustan Ltd., has recommended to pay marketing department to launch a shampoo of three different types. The marketing types of shampoo to be launched under the following estimated pay-offs for various level of sales.

Types of shampoo	Estimated Sales (in units)		
	15000	10000	5000
Egg shampoo	30	10	10
Clinic shampoo	40	15	5
Deluxe shampoo	55	20	3

What will be the marketing manager's decision if
(i) Maximum and
(ii) Minimax Principle applied?

40. Using integration find the area of the circle whose centre is at the origin and the radius is 5 units.

PART - IV

Note : Answer *all* the questions. **7 × 5 = 35**

41. (a) Solve the following system of equations by rank method :

$x + y + z = 9,\ 2x + 5y + 7z = 52,\ 2x + y - z = 0$

(OR)

(b) Evaluate : $\int \frac{3x^2 - 2x + 5}{(x-1)(x^2+5)} dx$

42. (a) If $\frac{dy}{dx} + 2y \tan x = \sin x$ and if $y = 0$ when $x = \frac{\pi}{3}$, express y in terms of x.

(OR)

(b) Obtain an initial basic feasible solution to the following transportation problem by North - west Corner method.

	D	E	F	G	Available
A	11	13	17	14	250
B	16	18	14	10	300
C	21	24	13	10	400
Required	200	225	275	250	

43. (a) Two types of soaps A and B are in the market. Their present market shares are 15% for A and 85% for B. Of those who bought A the previous year, 65% continue to buy it again while 35% switch over to B. Of those who bought B the previous year, 55% buy it again and 45% switch over to A. Find their market shares after one year and when is the equilibrium reached?

(OR)

(b) Calculate the value of y, when $x = 7.5$ from the table below :

x	1	2	3	4	5	6	7	8
y	1	8	27	64	125	216	343	512

44. (a) Solve the following differential equation.

$$\frac{dy}{dx} = \frac{x^2 + y^2}{xy}$$

(OR)

(b) Out of 750 families with 4 children each, how many families would be expected to have
(i) atleast one boy
(ii) atmost two girls and
(iii) children of both sexes?
(Assume equal probabilities for boys and girls)

enquiry@surabooks.com Ph:8124201000 / 8124301000
Kindly Share Your Study Materials to Our Email Id - padasalai.net@gmail.com

www.Padasalai.Net www.TrbTnpsc.com
www.surabooks.com

45. (a) Calculate the seasonal index for the monthly sales of a product using the method of simple averages.

Months	Year		
	2001	2002	2003
Jan	15	20	18
Feb	41	21	16
Mar	25	27	20
Apr	31	19	28
May	29	17	24
June	47	25	25
July	41	29	30
Aug	19	31	34
Sep	35	35	30
Oct	38	39	38
Nov	40	30	37
Dec	30	44	39

(OR)

(b) Consider a contiunous random variable X with probability density function.

$$f(x) = \begin{cases} 2e^{-2x} & , \quad x > 0 \\ 0 & , \quad \text{otherwise} \end{cases}$$

Find E(X) and V(X)

46. (a) A firm has the marginal revenue function given by $MR = \frac{a}{(x+b)^2} - c$. Where x is the output and a, b, c are constants. Show that the demand function is given by $x = \frac{a}{b(p+c)} - b$.

(OR)

(b) A manufacturer of ball pens claims that a certain pen he manufactures has a mean writing life of 400 pages with a standard deviation of 20 pages. A purchasing agent selects a sample of 100 pens and puts them for test. The mean writing life for the sample was 390 pages. Should the purchasing agent reject the manufacturer's claim at 1% level?

47. (a) If $h = 1$, Evaluate $\Delta\left[\frac{5x+12}{x^2+5x+6}\right]$

(OR)

(b) Construct the cost of living index number for 2011 on the basis of 2007 from the given data using family budget method.

Commodities	Price		Weights
	2007	2011	
A	350	400	40
B	175	250	35
C	100	115	15
D	75	105	20
E	60	80	25

❄❄❄❄❄

ANSWERS

PART - I

1. (b) $\frac{1}{2}(\log x)^2 + c$

2. (a) $\frac{28}{3}$

3. (d) 1

4. (a) $|A|^{n-1}$

5. (b) MR

6. (a) 2 sq. units

7. (d) of order 1 and degree 3

8. (d) $\frac{1}{x}$

9. (b) both equal and unequal intervals

10. (a) $1 - E^{-1}$

11. (d) cumulative probability

12. (a) V(X)

13. (c) $4\left(\frac{2}{3}\right)^6$

14. (c) $\frac{1}{81}$

15. (d) random sample

16. (b) two types

17. (d) all the above

18. (b) Fisher's

19. (a) VAM

20. (b) Total supply ≠ Total demand

enquiry@surabooks.com Ph:8124201000 / 8124301000
Kindly Share Your Study Materials to Our Email Id - padasalai.net@gmail.com

www.Padasalai.Net www.TrbTnpsc.com
www.surabooks.com

PART - II

21. $A = \begin{pmatrix} 3 & 1 & -5 & -1 \\ 1 & -2 & 1 & -5 \\ 1 & 5 & -7 & 2 \end{pmatrix}$

The order of A is 3×4

$\therefore \rho(A) \le 3$ [Since minimum of (3, 4) is 3]

Let us transform the matrix A to an echelon form.

Matrix A	Elementary Transformation
$A = \begin{pmatrix} 3 & 1 & -5 & -1 \\ 1 & -2 & 1 & -5 \\ 1 & 5 & -7 & 2 \end{pmatrix}$	
$\sim \begin{pmatrix} 1 & 5 & -7 & 2 \\ 1 & -2 & 1 & -5 \\ 3 & 1 & -5 & -1 \end{pmatrix}$	$R_1 \leftrightarrow R_3$
$\sim \begin{pmatrix} 1 & 5 & -7 & 2 \\ 0 & -7 & 8 & -7 \\ 3 & 1 & -5 & -1 \end{pmatrix}$	$R_2 \to R_2 - R_1$
$\sim \begin{pmatrix} 1 & 5 & -7 & 2 \\ 0 & -7 & 8 & -7 \\ 0 & -14 & 16 & -7 \end{pmatrix}$	$R_3 \to R_3 - 3R_1$
$\sim \begin{pmatrix} 1 & 5 & -7 & 2 \\ 0 & -7 & 8 & -7 \\ 0 & 0 & 0 & 7 \end{pmatrix}$	$R_3 \to R_3 - 2R_2$

The matrix is in echelon form and the number of non-zero matrix is 3.

$\therefore \rho(A) = 3.$

22. $\int \frac{1}{\sin^2 x \cos^2 x} dx = 4\int \frac{1}{4\sin^2 x \cos^2 x} dx$

$= 4\int \frac{1}{\sin^2(2x)} dx$

$= 4\int \operatorname{cosec}^2(2x)\, dx$

$= -\frac{4}{2}\cot(2x) + c$

$= -2\cot(2x) + c$

Hence, $\int \frac{1}{\sin^2 x \cos^2 x} dx = -2\cot(2x) + c$

23. Given marginal revenue

$MR = 9 - 4x^2$

$\Rightarrow \frac{dR}{dx} = 9 - 4x^2$

$\Rightarrow dR = (9 - 4x^2)\, dx$

$\Rightarrow \int dR = \int (9 - 4x^2)\, dx$

$\Rightarrow R = 9x - \frac{4x^3}{3} + k$ ... (1)

When no product is sold, revenue is zero

$\therefore$ When $x = 0$, $R = 0 \Rightarrow 0 = 0 - 0 + k \Rightarrow k = 0$

$\therefore$ (1) becomes $R = 9x - \frac{4x^3}{3}$

We know that $R = Px$ where P is the demand function

$\Rightarrow P\cancel{x} = \cancel{x}\left(9 - \frac{4x^2}{3}\right) \Rightarrow P = 9 - \frac{4x^2}{3}$

Hence, the demand function is $9 - \frac{4x^2}{3}$.

24. Given probability distribution function is

$X = x$	1	3	5
$P(X = x)$	$2k$	$3k$	$4k$

Since the given function is a p.d.f. each $p_i \ge 0$ and $\Sigma p_i = 1$

$\Rightarrow 2k + 3k + 4k = 1$

$\Rightarrow 9k = 1 \quad \Rightarrow k = \frac{1}{9}$

25. The mathematical form of assignment problem is

Minimize $Z = \sum_{i=1}^{n}\sum_{j=1}^{n} C_{ij} x_{ij}$ subject to the

Constraints $\sum_{i=1}^{n} x_{ij} = 1, j = 1, 2, \ldots n$

$\sum_{j=1}^{n} x_{ij} = 1, i = 1, 2, \ldots n$ and $x_{ij} = 0$ or 1 for all i, j

26. when $x = 0$,

$y = 0 + 0 + 0 - 1 \Rightarrow y = -1$

when $x = 1$,

$y = 1^3 - 1^2 + 1 - 1 \Rightarrow y = 0.$

when $x = 2$, $y = 2^3 - 2^2 + 2 - 1$

$\Rightarrow y = 8 - 4 + 1 \Rightarrow y = 5$

when $x = 3$, $y = 3^3 - 3^2 + 3 - 1$

$\Rightarrow y = 27 - 9 + 2 \Rightarrow y = 20$

when $x = 4$, $y = 4^3 - 4^2 + 4 - 1$

$\Rightarrow y = 64 - 16 + 3 \Rightarrow y = 51$

when $x = 5$, $y = 5^3 - 5^2 + 5 - 1$

enquiry@surabooks.com Ph:8124201000 / 8124301000
Kindly Share Your Study Materials to Our Email Id - padasalai.net@gmail.com

www.Padasalai.Net www.TrbTnpsc.com
www.surabooks.com

$\Rightarrow \quad y = 125 - 25 + 4 \Rightarrow y = 104$

Hence, the forward difference table is

x	y	Δy	$\Delta^2 y$	$\Delta^3 y$	$\Delta^4 y$	$\Delta^5 y$
0	–1					
1	0	1	4	6		
2	5	5	10	6	0	
3	20	15	16	6	0	0
4	51	31	22			
5	104	53				

27. The parameters of Binomial distribution are n and p

For Binomial distribution Mean = np =20

$$\text{Standard deviation} = \sqrt{npq} = 4$$

$$\therefore npq = 6 \Rightarrow npq/np$$

$$\frac{16}{20} = \frac{4}{5}$$

$$q = \frac{4}{5}$$

$$\Rightarrow \quad p = 1-q = 1-\left(\frac{4}{5}\right) = \frac{1}{5}$$

$$\text{since } np = 20$$

$$n = \frac{20}{p}$$

$$n = 100$$

28. Sample size $n = 400$

Probability of vegetarian $= \frac{230}{400} = 0.575$

$\therefore$ P = 0.575

Probability of non-vegetarian $q = 1 - p$

$= 1 - 0.575 \Rightarrow q = 0.425$

Standard error for sample proportion $= \sqrt{\frac{pq}{n}}$

$$= \sqrt{\frac{(0.575)(0.425)}{400}}$$

$$= \sqrt{0.000610} = 0.0246$$

$$\text{S.E} = 0.025 \text{ (app)}$$

29.

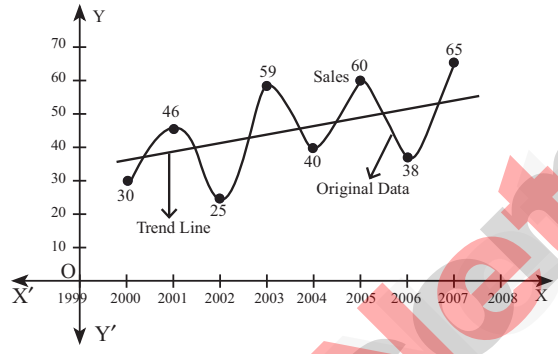

30. The auxiliary equation is

$$m^2 + 2m + c = 0$$

$$\text{Here } a = 1, b = 2, c = 2$$

$$\therefore m = \frac{-b \pm \sqrt{b^2 - 4ac}}{2a}$$

$$= \frac{-2 \pm \sqrt{2^2 - 4(1)(2)}}{2 \times 1}$$

$$= \frac{-2 \pm \sqrt{4-8}}{2}$$

$$= \frac{-2 \pm \sqrt{-4}}{2}$$

$$m = \pm - 1$$

For complex roots $-1 \pm i$, the general solution is

$$y = e^{-x}(C_1 \cos x + C_2 \sin x)$$

where C_1 and C_2 are arbitrary constants.

This is the required solution.

PART - III

31. Let 'x' be the cost of a pencil

Let 'y' be the cost of an eraser

$\therefore$ By given data, we get the following equations

$11x + 3y = 64$; $8x + 3y = 49$

$\Delta = \begin{vmatrix} 11 & 3 \\ 8 & 3 \end{vmatrix} = 9 \neq 0$. It has unique solution.

$\Delta_x = \begin{vmatrix} 64 & 3 \\ 49 & 3 \end{vmatrix} = 45 \quad \Delta_y = \begin{vmatrix} 11 & 64 \\ 8 & 49 \end{vmatrix} = 27$

$\therefore$ By Cramer's rule $x = \frac{\Delta_x}{\Delta} = \frac{45}{9} = 5$

$y = \frac{\Delta_y}{\Delta} = \frac{27}{9} = 3$

$\therefore$ The cost of a pencil is ₹ 5 and the cost of an eraser is ₹ 3.

enquiry@surabooks.com Ph:8124201000 / 8124301000
Kindly Share Your Study Materials to Our Email Id - padasalai.net@gmail.com

www.Padasalai.Net www.TrbTnpsc.com
www.surabooks.com

32. Let $I = \int x \log x \, dx$

Let $u = \log x$; $dv = x\,dx$

$$du = \frac{1}{x}\,dx \; ; \; v = \frac{x^2}{2}$$

Using integration by parts,

$$\int u\,dv = uv - \int v\,du$$

$$\Rightarrow \int x\log x\,dx = \log x\left(\frac{x^2}{2}\right) - \int \frac{x^2}{2}\,\frac{1}{x}\,dx$$

$$= \frac{x^2}{2}\log x - \frac{1}{2}\int x\,dx$$

$$= \frac{x^2}{2}\log x - \frac{1}{2}\,\frac{x^2}{2} + c$$

$$= \frac{x^2}{2}\log x - \frac{x^2}{4} + c$$

$$= \frac{x^2}{2}\left(\log x - \frac{1}{2}\right) + c$$

I L A T E

→ logarithmic function

33.

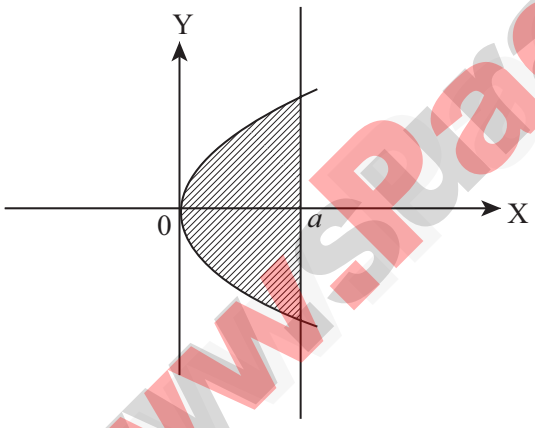

$y^2 = 4\,ax$ is the right open

$\Rightarrow \quad y = \sqrt{4ax}$ parabola.

The limits are from $x = 0$ to $x = a$

$$\therefore \text{Area} = 2\int_0^a y\,dx = 2\int_0^a \sqrt{4ax}\,dx$$

$$= 2\int_0^a 2\sqrt{a}\,\sqrt{x}\,dx$$

$$= 4\sqrt{a}\int_0^a \sqrt{x}\,dx$$

$$= 4\sqrt{a}\int_0^a x^{\frac{1}{2}}\,dx$$

$$= 4\sqrt{a}\left[\frac{x^{\frac{3}{2}}}{\frac{3}{2}}\right]_0^a$$

$$= 4\sqrt{a}\times\frac{2}{3}\left(x^{\frac{3}{2}}\right)_0^a$$

$$= 8\frac{\sqrt{a}}{3}\left(a^{\frac{3}{2}} - 0\right)$$

$$= \frac{8\sqrt{a}}{3}\left(a\sqrt{a}\right)$$

$$= \frac{8}{3}a^2 \text{ sq. units}$$

34. Given $y = \frac{a}{x} + b$

Differentiating with respect to x, we get,

$$\frac{dy}{dx} = \frac{-a}{x^2}$$

$$x^2\frac{dy}{dx} = -a$$

Again differentiating with respect to x we get

$$x^2\frac{d^2y}{dx^2} + 2x\frac{dy}{dx} = 0$$

$$\Rightarrow x\frac{d^2y}{dx^2} + 2\frac{dy}{dx} = 0$$

which is the required differential equation.

35. Since only four values of $f(x)$ are given, the polynomial which fits the data is of degree three. Hence fourth differences are zeros.

(ie) $\Delta^4 y_0 = 0$, $(E-1)^4 y_0 = 0$

$$(E^4 - E^3 + 6E^2 - 4E + 1)y_0 = 0$$

$$E^4y_0 - 4E^3y_0 + 6Ey_0 - Ey_0 + y_0 = 0$$

$$y^4 - 4y_3 + 6y_2 - 4y_1 + y_0 = 0$$

$$67.4 - 4y_3 + 6\,(54.1) - 2\,(49.2) + 45 = 0$$

$$240.2 = 4y_3$$

$$\therefore y_3 = 60.05$$

36. $E(X) = \sum_x xP_X(x)$

$$= (0 \times 0.2) + (1 \times 0.1) + (2 \times 0.4) + (3 \times 0.3) = 1.8$$

$$E(X^2) = \sum_x x^2P_X(x)$$

enquiry@surabooks.com Ph:8124201000 / 8124301000
Kindly Share Your Study Materials to Our Email Id - padasalai.net@gmail.com

www.Padasalai.Net www.TrbTnpsc.com
www.surabooks.com

$$= (0^2 \times 0.2) + (1^2 \times 0.1) + (2^2 \times 0.4) + (3^2 \times 0.3) = 4.4$$

$$E(3X + 2X^2) = 3E(X) + 2E(X^2)$$
$$= (3 \times 1.8) + (2 \times 4.4) = 14.2$$

37. Let x be a random variable follows binomial distribution with probability value $p = \frac{1}{2}$ and $q = \frac{1}{2}$. Probability that exactly 2 heads occur as follows

$$P(X = 2) = \binom{7}{x} p^x q^{n-x}$$
$$= \binom{7}{2}\left(\frac{1}{2}\right)^2\left(\frac{1}{2}\right)^{7-2}$$
$$\binom{7}{2} = \frac{7!}{2!(7-2)!}$$
$$= \frac{7!}{2!5!}$$
$$= \frac{7 \times 6}{2 \times 1} = 21$$
$$P(x = 2) = 21\left(\frac{1}{2}\right)^2\left(\frac{1}{5}\right)^5$$
$$= 21\left(\frac{1}{4}\right)\left(\frac{1}{32}\right)$$
$$= 21\left(\frac{1}{128}\right)$$

$\therefore$ The probability of getting exactly 2 heads in 7 coin tosses is $\frac{21}{128}$

38. If the occurrence of 3 or 4 on the die is called a success, then

Sample size = 9000; Number of Success = 3240

Sample proportion = $p = \frac{3240}{9000} = 0.36$.

Population proportion (P) = Prob(getting 3 or 4 when a die is thrown)

$\frac{1}{6} + \frac{1}{6} = \frac{2}{6} = \frac{1}{3} = 0.3333$

Thus P = 0.3333 and Q = 1 – P = 1– 0.3333 = 0.6667.

The S.E for sample proportion is given by

$$S.E = \sqrt{\frac{PQ}{n}} = \sqrt{\frac{(0.3333)(0.6667)}{9000}} = 0.00496$$

Hence the standard error for sample proportion is S.E = 0.00496.

enquiry@surabooks.com Ph:8124201000 / 8124301000
Kindly Share Your Study Materials to Our Email Id - padasalai.net@gmail.com

www.Padasalai.Net www.TrbTnpsc.com
www.surabooks.com

39.

	Estimated Sales (in Units)				
Types of Shampoo	15000	10000	5000	Minimum pay off	Maximum Pay off
Egg Shampoo	30	10	10	10	30
Clinic Shampoo	40	15	5	5	40
Deluxe Shampoo	55	20	3	3	35

(i) Max (10, 5, 3) = 10

∴ Egg Shampoo must be the manager's decision according to maximin principle

(ii) Min (30, 40, 35) = 30

∴ Egg Shampoo must be the manager's decision according to minimax principle

40. Equation of the required circle is $x^2 + y^2 = a^2$ ... (1)

Put $y = 5, x^2 = a^2$

$\Rightarrow \quad x = \pm a$

Since equation (1) is symmetrical about both the axes.

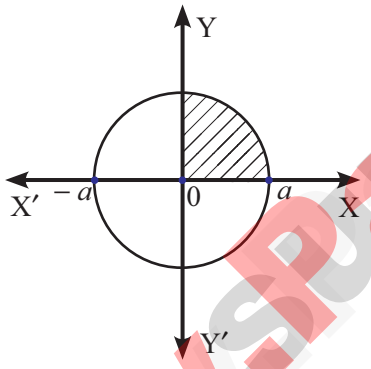

The required area = 4 [Area in the first quadrant between the limit 5 and a]

$$= 4\int_x^a y\,dx$$

$$= 4\int_5^a \sqrt{a^2 - x^2}\,dx$$

$$= 4\left[\frac{x}{2}\sqrt{a^2 - x^2} + \frac{a^2}{2}\sin^{-1}\frac{x}{a}\right]_5^a$$

$$= 4\left[5 + \frac{a^2}{2}\sin^{-1}\left(\frac{a}{a}\right)\right]$$

$$= 4\left(\frac{5a^2}{2}\sin^{-1}(1)\right)$$

$$= 4\left(\frac{5a^2}{2}\,\frac{\pi}{2}\right)$$

$$= \cancel{4}^{2} \times \frac{5a^2}{\cancel{2}} \times \frac{\pi}{\cancel{2}}$$

$$= 5a^2\pi = 25\pi a^2$$

PART - IV

41. (a) The given equations are $x + y + z = 9$, $2x + 5y + 7z = 52$, $2x + y - z = 0$

The matrix equation corresponding to the given system is

$$\begin{pmatrix} 1 & 1 & 1 \\ 2 & 5 & 7 \\ 2 & 1 & -1 \end{pmatrix}\begin{pmatrix} x \\ y \\ z \end{pmatrix} = \begin{pmatrix} 9 \\ 52 \\ 0 \end{pmatrix}$$

$$A \quad x = B$$

Augmented matrix [AB]	Elementary Transformation
$\begin{pmatrix} 1 & 1 & 1 & 9 \\ 2 & 5 & 7 & 52 \\ 2 & 1 & -1 & 0 \end{pmatrix}$	
$\sim \begin{pmatrix} 1 & 1 & 1 & 9 \\ 0 & 3 & 5 & 34 \\ 0 & -1 & -3 & -18 \end{pmatrix}$	$R_2 \to R_2 - 2R_1$ $R_3 \to R_3 - 2R_1$
$\sim \begin{pmatrix} 1 & 1 & 1 & 9 \\ 0 & 3 & 5 & 34 \\ 0 & 0 & -4 & -20 \end{pmatrix}$	$R_3 \to 3R_3 + R_2$
$\sim \begin{pmatrix} 1 & 1 & 1 \\ 0 & 3 & 5 \\ 0 & 0 & -4 \end{pmatrix}$	$\Rightarrow P(A) = 3$

www.padasalai.Net
enquiry@surabooks.com Ph:8124201000 / 8124301000
Kindly Share Your Study Materials to Our Email Id - padasalai.net@gmail.com

www.Padasalai.Net www.TrbTnpsc.com
www.surabooks.com

Since augmented matrix

$[A, B] \sim \begin{pmatrix} 1 & 1 & 1 & 9 \\ 0 & 3 & 5 & 34 \\ 0 & 0 & -4 & -20 \end{pmatrix}$ has three non-zero rows, $\rho([A,B]) = 3$.

That is, $\rho(A) = \rho([A,B]) = 3$ = number of unknowns.

So the given system is consistent and has unique solution.

To find the solution, we rewrite the echelon form into the matrix form.

$$\begin{pmatrix} 1 & 1 & 1 \\ 0 & 3 & 5 \\ 0 & 0 & -4 \end{pmatrix}\begin{pmatrix} x \\ y \\ z \end{pmatrix} = \begin{pmatrix} 9 \\ 34 \\ -20 \end{pmatrix}$$

$\Rightarrow \quad x + y + z = 9 \quad \ldots (1)$

$3y + 5z = 34 \quad \ldots(2)$

$-4z = -20 \quad \ldots(3)$

$(3) \Rightarrow \quad -4z = -20$

$\Rightarrow \quad z = \dfrac{-20}{-4} = 5$

$(2) \Rightarrow \quad 3y + 5(5) = 34$

$\Rightarrow \quad 3y + 25 = 34$

$\Rightarrow \quad 3y = 34 - 25$

$\Rightarrow \quad 3y = 9$

$\Rightarrow \quad y = \dfrac{9}{3}$

$y = 3.$

$(1) \Rightarrow \quad x + 3 + 5 = 9$

$\Rightarrow \quad x + 8 = 9$

$\Rightarrow \quad x = 9 - 8$

$\Rightarrow \quad x = 1$

$\therefore x = 1,\ y = 3,\ z = 5$ is the unique solution of the given equations.

(OR)

(b) $\displaystyle\int \frac{3x^2 - 2x + 5}{(x-1)(x^2+5)}\,dx = \int\left(\frac{A}{x-1} + \frac{Bx + c}{x^2+5}\right)dx$

$\displaystyle = \int\left(\frac{1}{x-1} + \frac{2x+0}{x^2+5}\right)dx = \int \frac{1}{x-1}\,dx + \int \frac{2x}{x^2+5}\,dx$

$= \log|x-1| + \log|x^2+5| + c$

$\left[\because \displaystyle\int \frac{f'(x)}{f(x)}\,dx = \log|f(x)| + c\right]$

$= \log|(x^2+5)(x-1)| + c$

$[\because \log m + \log n = \log mn]$

$= \log|x^3 - x^2 + 5x - 5| + c$

$$\frac{3x^2 - 2x + 5}{(x-1)(x^2+5)} = \frac{A}{(x-1)} + \frac{Bx + c}{(x^2+5)}$$

$\Rightarrow 3x^2 - 2x + 5 = A(x^2+5) + (Bx + C)(x-1)$

Putting $x = 1$,

$3 - 2 + 5 = A(1+5)$

$\Rightarrow \quad 6 = A(6) \Rightarrow \boxed{A = 1}$

Putting $x = 0$,

$5 = 5A - C$

$\Rightarrow \quad 5 = 5 - C \quad [\because A = 1]$

$\Rightarrow \quad C = 5 - 5 \Rightarrow \boxed{C = 0}$

Putting $x = -1$,

$3 + 2 + 5 = A(6) + (C - B)(-2)$

$\Rightarrow \quad 10 = 6A + 2B - 2C$

$\Rightarrow \quad 10 = 6 + 2B + 0$

$\Rightarrow \quad 10 - 6 = 2B \Rightarrow 4 = 2B$

$\Rightarrow \boxed{B = 2}$

42. (a) Given differential equation is of the form

$\dfrac{dy}{dx} + Py = Q$ where

$P = 2\tan x;\ Q = \sin x$

$\displaystyle\int p\,dx = \int 2\tan$

$dx = 2(\log\sec x) = \log\sec^2 x$

$\therefore$ Integrating factor (I. F) $= e^{\int p\,dx} = e^{\log\sec^2 x}$

$= \sec^2 x$

Hence the solution is

$y\,e^{\int p\,dx} = \displaystyle\int Q \cdot e^{\int p\,dx}\,dx + c$

$\Rightarrow \quad y\sec^2 x = \displaystyle\int \sin x\sec^2 x\,dx + c$

$\Rightarrow \quad y\sec^2 x = \displaystyle\int \sin x \cdot \frac{1}{\cos^2 x}\,dx + c$

$\Rightarrow \quad y\sec^2 x = \displaystyle\int \frac{\sin x}{\cos x} \cdot \frac{1}{\cos x}\,dx + c$

$\Rightarrow \quad y\sec^2 x = \displaystyle\int \tan x\sec x\,dx + c$

$\Rightarrow \quad y\sec^2 x = \sec x + c \quad \ldots(1)$

Also it is given when $x = \dfrac{\pi}{3}, y = 0$

$\therefore 0(\sec^2\dfrac{\pi}{3}) = \sec\dfrac{\pi}{3} + c$

$\Rightarrow \quad 0 = 2 + c$

$\Rightarrow \quad c = -2$

enquiry@surabooks.com Ph:8124201000 / 8124301000
Kindly Share Your Study Materials to Our Email Id - padasalai.net@gmail.com

www.Padasalai.Net www.TrbTnpsc.com
www.surabooks.com

$\therefore$ (1) becomes

$$y \sec^2 x = \sec x - 2$$

(OR)

(b) Here total availability = 250 + 300 + 400 = 950
total requirement = 200 + 225 + 275 + 250 = 950
$\Rightarrow$ total availability = total requirement

$\therefore$ The given problem is a balanced transportation problem

Hence, there exists a feasible solution to the given problem.

I. allocation

	D	E	F	G	a_i
A	(200) 11	13	17	14	250/50
B	16	18	14	10	300
C	21	24	13	10	400
b_j	200/0	225	275	250	

[$\because$ min (200, 250) = 200]

II. allocation

	E	F	G	a_i
A	(50) 13	17	14	50/0
B	18	14	10	300
C	24	13	10	400
b_j	225/175	275	250	

[$\because$ min (225, 50) = 50]

III. allocation

	E	F	G	a_i
B	(175) 18	14	10	300/125
C	24	13	10	410
b_j	175/0	275	250	

[$\because$ min (175, 300) = 175]

IV. allocation

	F	G	a_i
B	(125) 14	10	125/0
C	13	10	400
b_j	275/150	250	

[$\because$ min (275, 125) = 125]

V. allocation

	F	G	a_i
C	(150) 13	10	400/250
b_j	150/0	250	

[$\because$ min (150, 400) = 150]

VI. allocation

	G	a_i
C	(250) 10	250
b_j	250	

[$\because$ min (250, 250) = 250]

Thus, the allocations are

	D	E	F	G	Available
A	(200) 11	(50) 13	17	14	250
B	16	(175) 18	(125) 14	10	300
C	21	24	(150) 13	(250) 10	400
Required	200	225	275	250	

$\therefore$ The transportation schedule is

A→D, A→E, B→E, B→F, C→F, C→G

Hence, the total transportation cost is

= 200 (11) + 50 (13) + 175 (18) + 125 (14) + 150 (13) + 250 (10)

= 2200 + 650 + 3150 + 1750 + 1950 + 2500

= ₹ 12,200

43. (a) Transition probability matrix

$$T = \begin{array}{c} \\ A \\ B \end{array}\begin{array}{c} \begin{array}{cc} A & B \end{array} \\ \begin{pmatrix} 0.65 & 0.35 \\ 0.45 & 0.55 \end{pmatrix} \end{array}$$

Where A represents the percent of people those who bought soap A and B represents the percent of people those who bought soap B.

By the given data,

A = 15% = 0·15

and B = 85% = 0·85

Percentage after one year is

$$(0.15 \quad 0.85)\begin{pmatrix} 0.65 & 0.35 \\ 0.45 & 0.55 \end{pmatrix}$$

= (0.15) (0.65) +(0.85 (0.45) 0.15(0.35) + 0.85(0.55))

= (0.0975 +0.3825 0.0525 + 0.4675)

= (0.48 0.52)

Hence, market share after one year is 48% and 52%

At equilibrium,

$$(A \quad B)\,T = (A \quad B)$$

$$(A \quad B)\begin{pmatrix} 0.65 & 0.35 \\ 0.45 & 0.55 \end{pmatrix} = (A \quad B)$$

$$(0.65A + 0.45B \quad 0.35A + 0.55B) = (A \quad B)$$

enquiry@surabooks.com Ph:8124201000 / 8124301000
Kindly Share Your Study Materials to Our Email Id - padasalai.net@gmail.com

www.Padasalai.Net www.TrbTnpsc.com
www.surabooks.com

Equating the corresponding entries on both sides we get,

$$0.65A + 0.45B = A$$

$$\Rightarrow \quad 0.65A + 0.45(1-A) = A \text{ [Since } A + B = 1 \Rightarrow B = 1 - A]$$

$$\Rightarrow \quad 0.65A + 0.45 - 0.45A = A$$

$$\Rightarrow \quad 0.45 = A - 0.65A + 0.45A$$

$$\Rightarrow \quad 0.45 = A(1 - 0.65 + 0.45)$$

$$\Rightarrow \quad 0.45 = A(0.35 + 0.45)$$

$$\Rightarrow \quad 0.45 = A(0.8)$$

$$\Rightarrow \quad A = \frac{0.45}{0.8}$$

$$= 0.5625 = 56.25\%$$

$$\therefore \quad B = 1 - A$$

$$= 1 - 0.5625 = 0.4375$$

$$= 43.75\%$$

$\therefore$ Equilibrium is reached when A = 56.25% and B = 43.75%

$y \sec^2 x = \sec x - 2$

(OR)

(b) Since the required value is at the end of the table, apply backward interpolation formula.

x	y	Δy	$\Delta^2 y$	$\Delta^3 y$	$\Delta^4 y$
1	1				
		7			
2	8		12		
		19		6	
3	27		18		0
		37		6	
4	64		24		0
		61		6	
5	125		30		
		91		6	
6	216		36		0
		127		6	
7	343		42		
		169			
8	512				

$$y_{(x = x_n + nh)} = y_n + \frac{n}{1!}\nabla y_n + \frac{n(n+1)}{2!}\nabla^2 y_n + \frac{n(n+1)(n+2)}{3!}\nabla^3 y_n + \ldots$$

to find y at $x = 7.5$ $\therefore$ $x_n + nh = 7.5$, $x_n = 8$, $h = 1$

$$\Rightarrow \quad n = -0.5$$

$$y_{(x=7.5)} = 512 + \frac{-0.5}{1!}169 + \frac{-0.5(-0.5+1)}{2!}42 + \frac{-0.5(-0.5+1)(-0.5+2)}{3!}6 + \ldots$$

$$= 421.87$$

enquiry@surabooks.com Ph:8124201000 / 8124301000
Kindly Share Your Study Materials to Our Email Id - padasalai.net@gmail.com

www.Padasalai.Net www.TrbTnpsc.com
www.surabooks.com

44. (a)

$$\frac{dy}{dx} = \frac{x^2+y^2}{xy} \quad \ldots (1)$$

Let $y = vx$

Differentiating with respect to x.

$$d(uv) = uv' + vu'$$

$$\frac{dy}{dx} = v(1) + x\frac{dv}{dx} \quad \ldots (2)$$

From (1) and (2)

$$\frac{x^2+y^2}{xy} = v + x\frac{dv}{dx}$$

$$v + x\frac{dv}{dx} = \frac{x^2+v^2x^2}{x(vx)}$$

$$v + x\frac{dv}{dx} = \frac{\cancel{x^2}(1+v^2)}{v\cancel{x^2}}$$

$$x\frac{dv}{dx} = \frac{1+v^2}{v} - v$$

$$\Rightarrow x\frac{dv}{dx} = \frac{1+\cancel{v^2}-\cancel{v^2}}{v} = \frac{1}{v}$$

$$\boxed{\begin{aligned}\int \frac{1}{x} &= \log x + c \\ \int x^n &= \frac{x^{n+1}}{n+1} + c\end{aligned}}$$

$$\int v\,dv = \int \frac{dx}{x}$$

$$\frac{v^2}{2} = \log x + c$$

$$\boxed{\begin{aligned} y &= vx \\ \frac{y}{x} &= v\end{aligned}}$$

$$\frac{y^2}{2x^2} = \log x + c$$

(OR)

(b) Let the probability for boy or girl is $p = \frac{1}{2}$ and $q = \frac{1}{2}$, $n = 4$.

(i) P (atleast one boy) = P(X ≥ 1)

$= 1 - P(X < 1) = 1 - [P(X = 0)]$

$$= 1 - \left[4C_0\left(\frac{1}{2}\right)^0\left(\frac{1}{2}\right)^4\right] \quad \boxed{\begin{aligned} p(x) &= nC_x p^x q^{n-x} \\ n &= 4, x = 0\end{aligned}}$$

$$= 1 - \left(\frac{1}{2}\right)^4 = 1 - \frac{1}{16} = 1 - .0625. = 0.9375$$

∴ Probability of one family having atleast one boy = 0.9375.

Hence, probability of 750 families having atleast one boy = 0.9375 × 750 = 703.

(ii) P (atmost 2 girls) = P(X ≤ 2)

$= P(X = 0) + P(X = 1) + P(X = 2)$

$$= 4C_0\left(\frac{1}{2}\right)^0\left(\frac{1}{2}\right)^4 + 4C_1\left(\frac{1}{2}\right)\left(\frac{1}{2}\right)^3 + 4C_2\left(\frac{1}{2}\right)^2\left(\frac{1}{2}\right)^2$$

$$= \left(\frac{1}{2}\right)^4 [4C_0 + 4C_1 + 4C_2]$$

$$= \frac{1}{16}\left[1 + 4 + \frac{4\times 3}{2\times 1}\right] = 0.0625\,(5+6)$$

$= 0.0625 \times 11 = 0.6875.$

∴ Probability of one family having atmost 2 girls = 0.6875.

Hence, probability of 750 families having atmost 2 girls

= 0.6875 × 750 = 515.6 = 516.

(iii) P(Children of both sexes) = P (atleast one girl and atleast one boy)

$= 1[P(X = 0) + P(X = 4)]$

$$= 1 - 4C_0\left(\frac{1}{2}\right)^0\left(\frac{1}{2}\right)^4 - C_4\left(-\frac{1}{2}\right)^4\left(\frac{1}{2}\right)^0$$

$$= 1 - \frac{1}{16} - \frac{1}{16} = 1 - \frac{2}{16} = 1 - \frac{1}{8} = \frac{7}{8}$$

∴ Probability of 1 family of having children of both sexes = 0.875.

∴ Probability of 750 families having children of both sexes = 0.875 × 75 = 656.

enquiry@surabooks.com Ph:8124201000 / 8124301000
Kindly Share Your Study Materials to Our Email Id - padasalai.net@gmail.com

www.Padasalai.Net www.TrbTnpsc.com
www.surabooks.com

45. (a) Computation of seasonal Indices by method of simple averages.

Months	Year			Monthly Total	Monthly Averages
	2001	2002	2003		
Jan	15	20	18	53	17.67
Feb	41	21	16	78	26
Mar	25	27	20	72	24
Apr	31	19	28	78	26
May	29	17	24	70	23.33
June	47	25	25	97	32.33
July	41	29	30	100	33.33
Aug	19	31	34	84	28
Sep	35	35	30	100	33.33
Oct	38	39	38	115	38.33
Nov	40	30	37	107	35.67
Dec	30	44	39	113	37.67

$$\text{S.I. for Jan} = \frac{\text{Monthly Average (for Jan)}}{\text{General average}} \times 100$$

$$\text{Grand Average} = \frac{355.66}{12} = 29.64$$

$$\text{S.I. for Jan} = \frac{17.67}{29.64} \times 100 = 59.62$$

$$\text{S.I. for Feb} = \frac{26}{29.64} \times 100 = 87.72$$

Similarly other seasonal index values can be obtained.

Months	Second Index
Jan	59.62
Feb	87.72
Mar	80.97
Apr	87.72
May	78.71
June	109.08
July	112.45
Aug	94.47
Sep	112.45
Oct	129.32
Nov	120.34
Dec	127.09

(OR)

(b) Given probability density function is

$$f(x) = \begin{cases} 2e^{-2x} & , \quad 0 > 0 \\ 0 & , \quad \text{otherwise} \end{cases}$$

$$E(X) = \int_{-\infty}^{\infty} x - f(x)\, dx$$

$$= \int_{0}^{\infty} x - 2e^{-2x}\, dx$$

$$= 2\int_{0}^{\infty} xe^{-2x}\, dx = 2\left[\frac{1!}{2^2}\right]$$

$$\left[\because \int_{0}^{\infty} x^n e^{-ax}\, dx = \frac{n!}{a^{n+1}} \text{ gamma integral here } a = 2; n = 1\right]$$

$$E(X) = \frac{2}{4} = \frac{1}{2}$$

$$V(X) = E(X^2) - [E(X)]^2$$

$$= \frac{1}{2} - \left(\frac{1}{2}\right)^2$$

$$= \frac{1}{2} - \frac{1}{4} = \frac{2-1}{4} = \frac{1}{4}$$

$$\therefore V(X) = \frac{1}{4}$$

$$E(X) = \frac{1}{2}$$

46. (a) Given MR $= a(x+b)^{-2} - c$

$$R = \int a(x+b)^{-2}\, dx - c\int dx$$

$$R = \frac{a(x+b)^{-1}}{-1} - cx + k$$

$$R = -\frac{a}{x+b} - cx + k$$

When $x = 0$, $R = 0$

$$\therefore 0 = -\frac{a}{b} - c(0) + k$$

$$k = \frac{a}{b}$$

$$R = -\frac{a}{x+b} - cx + \frac{a}{b}$$

$$= \frac{-ab + a(x+b)}{b(x+b)} - cx$$

enquiry@surabooks.com Ph:8124201000 / 8124301000
Kindly Share Your Study Materials to Our Email Id - padasalai.net@gmail.com

www.Padasalai.Net www.TrbTnpsc.com
www.surabooks.com

$$R = \frac{ax}{b(x+b)} - cx$$

Demand function $P = \frac{R}{x}$

$$P = \frac{a}{b(x+b)} - c$$

$$P + c = \frac{a}{b(x+b)}$$

$$b(x+b) = \frac{a}{P+c}$$

$$x = \frac{a}{b(P+c)} - b$$

(OR)

(b) Sample size $n = 100$, Sample mean $\bar{x} = 390$ pages,

Population mean $\mu = 400$ pages

Population SD $\sigma = 20$ pages.

The sample is a large sample and so we apply Z -test

Null Hypothesis: There is no significant difference between the sample mean and the population mean of writing life of pen he manufactures, i.e., $H_0 : \mu = 400$

Alternative Hypothesis: There is significant difference between the sample mean and the population mean of writing life of pen he manufactures, i.e., $H_1 : \mu \neq 400$ (two tailed test)

The level of significance $\alpha = 1\% = 0.01$

Applying the test statistic

$$Z = \frac{\bar{x} - \mu}{\frac{\sigma}{\sqrt{n}}} \sim N(0,1);$$

$$Z = \frac{390 - 400}{\frac{20}{\sqrt{100}}} = \frac{-10}{2} = -5, \therefore |Z| = 5$$

Thus the calculated value $|Z| = 5$ and the significant value or table value $Z_{\frac{\alpha}{2}} = 2.58$

Comparing the calculated and table values, we found $Z > Z_{\frac{\alpha}{2}}$ i.e., $5 > 2.58$

Inference: Since the calculated value is greater than table value i.e., $Z > Z_{\frac{\alpha}{2}}$ at 1% level of significance, the null hypothesis is rejected and Therefore we concluded that $\mu \neq 400$ and the manufacturer's claim is rejected at 1% level of significance.

enquiry@surabooks.com Ph:8124201000 / 8124301000
Kindly Share Your Study Materials to Our Email Id - padasalai.net@gmail.com

www.Padasalai.Net www.TrbTnpsc.com
www.surabooks.com

47. (a) $\Delta\left[\dfrac{5x+12}{x^2+5x+6}\right]$

By Partial fraction method

$$\frac{5x+12}{x^2+5x+6} = \frac{A}{x+3}+\frac{B}{x+2}$$

$$A = \frac{5x+12}{x+2}\,[x=-3]$$

$$= \frac{-15+12}{-1} = \frac{-3}{-1} = 3$$

$$B = \frac{5x+12}{x+3}\,[x=-2] = \frac{2}{1} = 2$$

$$\frac{5x+12}{x^2+5x+6} = \left[\frac{3}{x+3}+\frac{2}{x+2}\right]$$

$$\Delta\left[\frac{5x+12}{x^2+5x+6}\right] = \Delta\left[\frac{3}{x+3}+\frac{2}{x+2}\right]$$

$$= \left[\frac{3}{x+1+3}-\frac{3}{x+3}\right]+\left[\frac{2}{x+1+2}-\frac{2}{x+2}\right]$$

$$= 3\left[\frac{1}{x+4}-\frac{1}{x+3}\right]+2\left[\frac{1}{x+3}-\frac{1}{x+2}\right]$$

$$= \left[\frac{-3}{(x+4)(x+3)}-\frac{2}{(x+3)(x+2)}\right] = \frac{-5x-14}{(x+2)(x+3)(x+4)} \quad \text{when } h=1$$

(OR)

(b)

Commodities	Price		Weights (V)	$P = \frac{p_1}{p_0} \times 100$	PV
	2007 (p_0)	2011 (p_0)			
A	350	400	40	114.286	4571.44
B	175	250	35	142.857	4999.995
C	100	115	15	115	1725
D	75	105	20	140	2800
E	60	80	25	133.333	3333.325
		Total	135		17429.76

Cost of Living Index Number $= \dfrac{\sum PV}{\sum V} = \dfrac{17429\cdot 76}{135} = 129.1093$

Hence, the Cost of Living Index Number for a particular class of people for the year 2011 is increased by 129.1093 % as compared to the year 2007.

❁❁❁❁❁

enquiry@surabooks.com Ph:8124201000 / 8124301000
Kindly Share Your Study Materials to Our Email Id - padasalai.net@gmail.com