www.Padasalai.Net www.TrbTnpsc.com

M2025

No. of Printed Pages : 4

Register Number

A

PART – III

இயற்பியல் / PHYSICS

(English Version)

Time Allowed : 3.00 Hours] [Maximum Marks : 70

Instructions : (1) Check the question paper for fairness of printing. If there is any lack of fairness, inform the Hall Supervisor immediately.

(2) Use **Blue** or **Black** ink to write and underline and pencil to draw diagrams.

PART – I

Note : (i) Answer **all** the questions. **15x1=15**

(ii) Choose the most appropriate answer from the given **four** alternatives and write the option code and the corresponding answer.

1. In the combination of the following gates, write the Boolean equation for output Y in terms of input A, B, C.

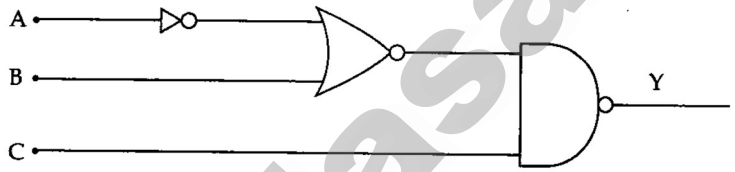

(a) $\bar{A}\,B\,\bar{C}$ (b) $A\,\bar{B}\,C$ (c) $\bar{A}+\bar{B}+\bar{C}$ (d) $\bar{A}+B+\bar{C}$

2. If a material having intensity of magnetization 500 Am^{-1} is placed in a magnetizing field of 1000 Am^{-1}, then the susceptibility of the material is :

(a) 0.2 (b) 0.8 (c) 0.7 (d) 0.5

3. In a transformer, the number of turns in the primary and the secondary are 410 and 1230 respectively. If the current in primary is 6 A, then that in the secondary coil is :

(a) 12 A (b) 2 A (c) 1 A (d) 18 A

4. In Joule's heating law, when R and t are constant, if H is taken along the Y-axis and I^2 along the X-axis, the graph is a :

(a) circle (b) straight line (c) ellipse (d) parabola

5. The dimension of $\frac{1}{\mu_0 \varepsilon_0}$ is

(a) $[L^{-1}\,T]$ (b) $[L\,T^{-1}]$ (c) $[L^{-2}\,T^{2}]$ (d) $[L^{2}\,T^{-2}]$

[Turn Over

Kindly Send Me Your Study Materials To Us Email ID: padasalai.net@gmail.com

6. "Ski wax" is an application of nano product in the field of :
   (a) Sports (b) Medicine
   (c) Automotive industry (d) Textile
7. An electric dipole is placed at an alignment angle of 30^0 with an electric field of 2×10^5 N C^{-1}. It experiences a torque equal to 8 N m. The charge on the dipole if the dipole length is 1 cm is
   (a) 5 mC (b) 4 mC (c) 7 mC (d) 8 mC
8. For light incident from air on a slab of refractive index 2, the maximum possible angle of refraction is,
   (a) 60^0 (b) 30^0 (c) 90^0 (d) 45^0
9. A radiative element has N_0 number of nuclei at t=0. The number of nuclei remaining after half of a half-life (that is, at time t = ½ $T_{½}$) is :
   (a) $\frac{N_0}{4}$ (b) $\frac{N_0}{2}$ (c) $\frac{N_0}{8}$ (d) $\frac{N_0}{\sqrt{2}}$
10. Calculate the distance upto which ray optics is a good approximation for light of wavelength 500 nm falls on an aperture of width 0.5 mm.
   (a) 20 cm (b) 25 m (c) 25 cm (d) 30 cm
11. First diffraction minimum due to a single slit of width 1.0×10^{-5} cm is at 30°. Then wavelength of light used is,
   (a) 600 Å (b) 400 Å (c) 700 Å (d) 500 Å
12. A thin conducting spherical shell of radius R has a charge Q which is uniformly distributed onits surface. The correct plot for electrostatic potential due to this spherical shell is :

   (a) 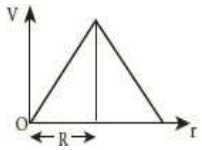

   (b) 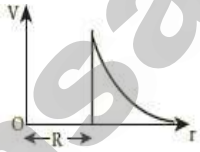

   (c) 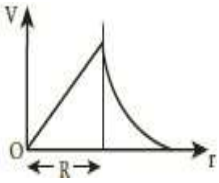

   (d) 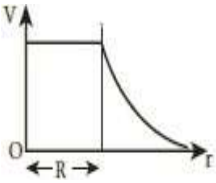

13. In photoelectric emission, a radiation whose frequency is 4 times threshold frequency of a certain metal is incident on the metal. Then the maximum possible velocity of the emitted electron will be :
   (a) $2\sqrt{\frac{hv_0}{m}}$ (b) $\sqrt{\frac{hv_0}{m}}$ (c) $\sqrt{\frac{hv_0}{2m}}$ (d) $\sqrt{\frac{6hv_0}{m}}$
14. To obtain sustained oscillation in an oscillator,
   (a) Feedback should be positive (b) Feedback factor must be unity
   (c) Phase shift must be 0 or 2π (d) All the above
15. The transverse nature of light is shown in,
   (a) scattering (b) interference (c) polarization (d) diffraction

A

Padasalai.Net

www.Padasalai.Net www.TrbTnpsc.com

PART – II

Note : Answer **any six** questions. Question No. **24** is **compulsory**. **6x2=12**

16. A parallel plate capacitor has square plates of side 5 cm and separated by a distance of 1 mm. Calculate the capacitance of this capacitor.
17. State Lenz's Law.
18. Write the limitations of Cyclotron.
19. What is mass defect? Give its expression.
20. What is optical path ?
21. What are the shapes of wave front for a :
    (a) Source at infinite (b) Point Source (c) Line Source
22. Draw the circuit diagram for a forward biased p-n junction diode.
23. Define stopping potential.
24. A cell supplies a current of 0.9 A through a 2 Ω resistor and a current of 0.3 A through a 7 Ω resistor. Calculate the internal resistance of the cell.

PART – III

Note : Answer **any six** questions. Question No. **33** is **compulsory**. **6x3=18**

25. State Kirchhoff's current rule and voltage rule.
26. A radiation of wavelength 300 nm is incident on a calcium surface. Will photoelectrons be observed ? Justify your answer.
    (Work function of calcium = 3.20 eV)
27. Give an account of magnetic Lorentz force.
28. What are the advantages and disadvantages of Alternating Current System over Direct Current System ?
29. Write down the properties of electromagnetic waves. (Any six)
30. Obtain the relation between phase difference and path difference.
31. What are the differences between Coulomb force and gravitational force ?
32. Distinguish between intrinsic and extrinsic semiconductors.
33. Find the (i) Angular momentum (ii) Velocity of the electron revolving in the 5th orbit of hydrogen atom of radius 13.25 Å

Kindly Send Me Your Study Materials To Us Email ID: padasalai.net@gmail.com

www.Padasalai.Net www.TrbTnpsc.com

PART – IV

Note : Answer **all** the questions. **5x5=25**

34. (a) Obtain the expression for electric field due to an infinitely long charges wire.

OR

(b) State and prove De-Morgan's first and second theorems.

35. (a) How the emf of two cells are compared using potentiometer ?

OR

(b) Describe the Fizeau's method to determine the speed of light.

36. (a) Derive the expression for the torque on a current-carrying coil in a magnetic field.

OR

(b) Explain the construction and working of photo emissive cell and give any two applications of photo cell.

37. (a) (i) How will you induce an emf by changing the area enclosed by a coil ?

(ii) A circular metallic disc of area 0.03 m^2 rotates in a uniform magnetic field of 0.4 T. The axis of rotation passes through the centre and perpendicular to its plane and is also parallel to the magnetic field. If the disc completes 20 revolutions in one second and the resistance of the disc is 4 Ω, calculate the induced emf between the axis and the rim.

OR

(b) (i) State Brewster's Law.

(ii) What is the angle at which a glass plate of refractive index 1.65 is to be kept with respect to the horizontal surface so that an unpolarised light travelling horizontal after reflection from the glass plate is found to be plane polarized?

38. (a) Obtain the law of radioactive decay.

OR

(b) What is absorption spectrum ? Explain the types of absorption spectrum.

A

- 0 0 0 -

Kindly Send Me Your Study Materials To Us Email ID: padasalai.net@gmail.com

HIGHER SECONDARY SECOND YEAR EXAMINATION – MARCH 2025

PHYSICS ANSWER KEY

Note:

1. Answers written with **Blue** or **Black ink** only to be evaluated.
2. Choose the most suitable answer in Part A, from the given alternatives and write the **option code** and the **corresponding answer.**
3. For answers in Part-II, Part-III and Part-IV like reasoning, explanation, narration, description and listing of points, students may write in their own words but without changing the concepts and without skipping any point.
4. In numerical problems, if formula is not written, marks should be given for the remaining correct steps.
5. In graphical representation, physical variables for X-axis and Y-axis should be marked.

PART – I

Answer all the questions. **15x1=15**

Q. No.	OPTION	TYPE – A	Q. No.	OPTION	TYPE – B
1	(d)	$\bar{A} + B + \bar{C}$	1	(c)	25 cm
2	(d)	0.5	2	(c)	polarization
3	(b)	2 A	3	(d)	0.5
4	(b)	straight line	4	(b)	2 A
5	(d)	$[L^2 T^{-2}]$	5	(d)	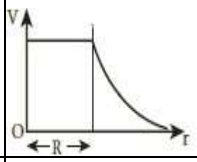
6	(a)	Sports	6	(d)	$\sqrt{\frac{6hv_0}{m}}$
7	(d)	8 mC	7	(a)	Sports
8	(b)	30^0	8	(d)	8 mC
9	(d)	$\frac{N_0}{\sqrt{2}}$	9	(b)	30^0
10	(c)	25 cm	10	(d)	500 Å
11	(d)	500 Å	11	(d)	All the above
12	(d)	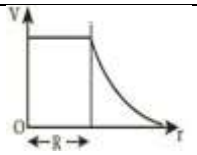	12	(d)	$[L^2 T^{-2}]$
13	(d)	$\sqrt{\frac{6hv_0}{m}}$	13	(b)	straight line

RAJENDRAN M, DEPARTMENT OF PHYSICS, SRMHSS, KAVERIYAMPOONDI, TIRUVANNAMALAI.

Kindly Send Me Your Study Materials To Us Email ID: padasalai.net@gmail.com

Q. No.	OPTION	TYPE – A	Q. No.	OPTION	TYPE – B
14	(d)	All the above	14	(d)	$\frac{N_0}{\sqrt{2}}$
15	(c)	polarization	15	(d)	$\bar{A} + B + \bar{C}$

PART – II

Answer **any six** questions. Question number **24 is compulsory.** 6x2=12

16	The capacitance of the capacitor is $C = \frac{\epsilon_0 A}{d}$; $= \frac{8.854 \times 10^{-12} \times 25 \times 10^{-4}}{1 \times 10^{-3}}$ $= 221.2 \times 10^{-13}$ F; $C = 22.12 \times 10^{-12}$ F; **C = 22.12 pF**		**2**
17	***Lenz's law:*** Lenz's law states that the direction of the **induced current** is such that is **always opposes** the cause responsible for its production.		**2**
18	***Limitations of cyclotron:*** i) The speed of the ion is limited. (ii) Electron cannot be accelerated. iii) Uncharged particles cannot be accelerated.		**2**
19	***Mass defect with expression:*** The experimental mass of a nucleus is less than the total mass of its individual constituents. The **mass difference between total mass of the nucleons and the real mass of the nucleus** is called mass defect (Δ_m) Δ_m (Z m_p + N m_n)– M		**2**
20	***Optical path:*** Optical path of a medium is defined as **the distance (d′) light travels in vacuum in the same time it travels a distance (d) in the medium**. If 'n' is the refractive index of the medium, then optical path is; **d′ = n d**		**2**
21	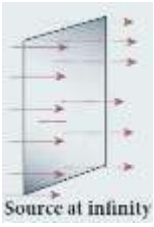 **Plane (or) straight wave front** **Spherical wave front** **Cylindrical wave front**		**2**

Kindly Send Me Your Study Materials To Us Email ID: padasalai.net@gmail.com

22	***PN – Junction Diode Forward Bias:*** 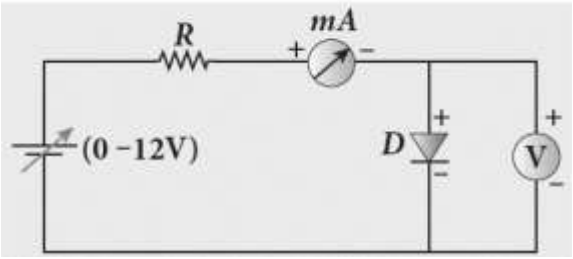 		**2**
23	***Stopping potential:*** The **negative or retarding potential given to collecting electrode** which is just sufficient to stop the **most energetic photoelectrons emitted** and make the **photo current zero** is called stopping potential or cut - off potential.		**2**
24	The internal resistance of the cell $I_1 = \frac{\varepsilon}{R_1+r}$; $\varepsilon = I_1 (R_1 + r)$ ..... 1 The internal resistance of the cell $I_2 = \frac{\varepsilon}{R_2+r}$; $\varepsilon = I_2 (R_2 + r)$ ..... 1 **From equation 1 and 2** $I_1 (R_1 + r) = I_2 (R_2 + r)$ **r =** $\frac{I_1R_1-I_2R_2}{I_2-I_1}$; $= \frac{(0.9 \times 2)-(0.3 \times 7)}{0.3-0.9}$; $= \frac{1.8-2.1}{-0.6}$; $= \frac{0.3}{0.6}$; $= \frac{1}{2}$ **r = 0.5Ω**		**2**

PART – III

Answer **any six** questions. Question number **33 is compulsory.** 6x3=18

25	***Kirchhoff's first law (current rule or junction rule):*** It states that the **algebraic sum of currents at any junction** in a circuit **is zero**. ($\sum I = 0$). It is a statement of conservation of electric charge. ***Kirchhoff's second law (voltage rule or loop rule):*** It states that in a closed circuit the **algebraic sum of the products** of the **current and resistance of each part of the circuit is equal** to the **total emf** included in the circuit ($\sum IR = \sum \xi$). It is a statement of conservation of energy for an isolated system.		**3**
26	Energy of the incident photon is $E = hv = \frac{hc}{\lambda}$ (in Joules) $E = \frac{hc}{\lambda e}$ (in eV) ; Substituting the known values, we get $= \frac{6.634 \times 10^{-34} \times 3 \times 10^{8}}{300 \times 10^{-9} \times 1.6 \times 10^{-19}}$; $= \frac{19.902 \times 10^{-26}}{480 \times 10^{-28}}$; 0.04146×10^2 **E = 4.14 eV** The **work function of calcium = 3.20 eV**. Since the energy of the incident photon is **greater than the work function of calcium**, photoelectrons are observed in this case.		**3**

Kindly Send Me Your Study Materials To Us Email ID: padasalai.net@gmail.com

27	***Lorentz force:*** When an electric charge 'q' moves with velocity $\vec{v}$ in the magnetic field $\vec{B}$, it experiences a force called Lorentz magnetic force. $F_m = Bqv \sin\theta$; In vector notation, $\vec{F}_m = q(\vec{v} \times \vec{B})$ ***Properties of Lorentz magnetic force:*** (i) $\vec{F}_m$ is directly proportional to the magnetic field ($\vec{B}$) (ii) $\vec{F}_m$ is directly proportional to the velocity ($\vec{v}$) (iii) $\vec{F}_m$ is directly proportional to sine of the angle between the velocity and magnetic field. (iv) $\vec{F}_m$ is directly proportional to the magnitude of the charge (v) The direction of $\vec{F}_m$ is always perpendicular to $\vec{v}$ and $\vec{B}$ (vi) The direction of $\vec{F}_m$ on negative charge is opposite to the direction of $\vec{F}_m$ on positive charge (vii) If the of the charge is along the magnetic field, then $\vec{F}_m$ is zero		3
28	***Advantages of AC over DC:*** The generation of **AC is cheaper than that of DC** When **AC is supplied at higher voltages**, the transmission losses are small compared to DC transmission. **AC can easily be converted into DC** with the help of rectifier. ***Disadvantages of AC over DC:*** Alternating voltages cannot be used for certain application. (e.g) **charging of batteries, electroplating, electric traction etc.,** **At high voltages, it is more dangerous to work with AC than DC**		3
29	***Properties of electromagnetic waves:*** 1) Electromagnetic waves are **produced by any accelerated charge.** 2) They **do not require any medium** for propagation. So **electromagnetic waves are non-mechanical wave**. 3) They are **transverse in nature**, (i.e) the oscillating electric field vector, oscillation magnetic field vector and direction of propagation are mutually perpendicular to each other. 4) They **travel with speed of light in vacuum or free space** and it is given by, $C = \frac{1}{\sqrt{\varepsilon_0 \mu_0}} = 3\times10^8 ms^{-1}$ 5) In a medium with permittivity 'ε' and permeability 'μ', the speed of electromagnetic wave is less than speed in free space or vacuum. (i.e.) $(v < c)$		3

Kindly Send Me Your Study Materials To Us Email ID: padasalai.net@gmail.com

Hence, **refractive index of the medium** is, $\mu = \frac{c}{v} = \frac{1/\sqrt{\varepsilon_0\mu_0}}{1/\sqrt{\varepsilon\mu}}$

$$\therefore n = \sqrt{\varepsilon_r\mu_r}$$

where ε_r is the relative permittivity of the medium (also known as dielectric constant) and μ_r is the relative permeability of the medium.

6) They are **not deflected by electric or magnetic field.**

7) They **show interference, diffraction and polarization**.

8) Like other waves, electromagnetic waves also **carry energy, linear momentum and angular momentum.**

9) If the electromagnetic wave incident on a material surface is **completely absorbed, then the energy delivered** is 'U' and the **momentum imparted on the surface** is $p = \frac{U}{c}$,

10) If the incident electromagnetic wave of energy 'U' is **totally reflected from the surface, then the momentum delivered to the surface** is $\Delta p = \frac{U}{c} - \left(-\frac{U}{c}\right) = 2\frac{U}{c}$

30 ***Relation between phase difference and path difference:*** **3**

Phase is the angular position of a vibration.

In the path of the wave, one wavelength λ corresponds to a phase of 2π

Hence the path difference δ corresponds to a phase difference ϕ is

$$\delta = \frac{\lambda}{2\pi}\phi \text{ (or) } \phi = \frac{2\pi}{\lambda}\delta$$

31 ***Differences between Coulomb force and gravitational force:*** **3**

S. No.	Coulomb Force	Gravitational Force
1	It acts **between two charges**	It acts **between two masses**
2	It can be **attractive or repulsive**	It is **always attractive**
3	It is always **greater in magnitude**	It is **always lesser** in magnitude
4	It **depends** on the nature of the medium	It is **independent** of the medium
5	If charges are in motion, another force called Lorentz force come in to play in addition to Coulomb force	Gravitational force is the same whether two masses are at rest or in motion
6	The value of the constant **k** in Coulomb law **$k = 9 \times 10^9$ Nm^2 C^{-2}**	The value of the gravitational constant **$G = 6.67 \times 10^{-11}$ Nm^2 kg^{-2}**

Kindly Send Me Your Study Materials To Us Email ID: padasalai.net@gmail.com

32	***Intrinsic semiconductor:***	**Extrinsic semiconductor:**		3
	A semiconductor in its **pure form without impurity**.	The semiconductor obtained by doping either **pentavalent impurity** or **trivalent impurity**		
	Its conduction is low	Its conduction is high		
	(e.g.) Silicon, Germanium.	(e.g.) P - type and N-type semiconductor. Silicon doped with boran, Germanium doped with arsenic		
	Has equal number of charge carriers concentration	In N-type **electrons** are majority charge carriers In P-type **holes** are majority charge carriers		
33	**(i) Angular momentum is given by** $= n\hbar = \frac{nh}{2\pi}; = \frac{5 \text{ x } 6.6 \text{ x} 10^{-34}}{2 \text{ x } 3.14}$ $= 5.25 \text{ x } 10^{-34}$ kgm^{2}s^{-1} **(ii) Velocity is given by velocity,** $= \frac{l}{mr}; = \frac{(5.25 \text{ x } 10^{-34} \text{ kgm}^2\text{s}^{-1})}{(9.1 \text{ x } 10^{-31} \text{ kg})\,(13.25 \text{ x } 10^{-10} \text{ m})}$ $v =$ **4.4 x 10^5 ms^{-1}**			3

PART – IV

Answer **all** the questions. 5x5=25

34 (a)	***Electric field due to infinitely long charged wire*:** Consider an infinitely long straight wire of uniform linear charge density 'λ'. Let 'P' be a point at a distance 'r' from the wire. Let 'E' be the electric field at 'P'. Consider a cylindrical Gaussian surface of length 'L' and radius 'r'. The electric flux through the **top surface**, $\Phi_{tap} = \int \vec{E}.\overrightarrow{dA} = \int E\, dA \cos 90^0 = 0$ The electric flux through the **bottom surface**, $\Phi_{bottom} = \int \vec{E}.\overrightarrow{dA} = \int E\, dA \cos 90^0 = 0$ Then the total electric flux through the **curved surface**, $\Phi_{curve} = \int \vec{E}.\overrightarrow{dA} = \int E\, dA \cos 0^0 = E\int dA$; $\Phi_{curve} = E\, 2\pi rL$ Then the **total electric flux** through the **Gaussian surface**, $\Phi_E = \Phi_{top} + \Phi_{bottom} + \Phi_{curve}$; $\Phi_E = E\,(2\pi rL)$ **By Gauss law,** $\Phi_E = \frac{Q_{in}}{\varepsilon_0}$ **;** $E\,(2\pi rL) = \frac{\lambda L}{\varepsilon_0}$ **;** $E = \frac{\lambda}{2\pi\varepsilon_0 r}$ In vector notation, $\vec{E} = \frac{\lambda}{2\pi\varepsilon_0 r}\hat{r}$ Here $\hat{r} \rightarrow$ unit vector perpendicular to the curved surface outwards. If $\lambda > 0$, then $\vec{E}$ points perpendicular outward ($\hat{r}$) from the wire and if $\lambda < 0$, then $\vec{E}$ points perpendicular inward ($-\hat{r}$)	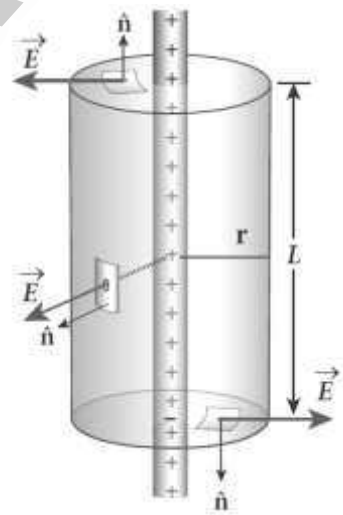	5

Kindly Send Me Your Study Materials To Us Email ID: padasalai.net@gmail.com

34 (b)

De Morgan's First Theorem:

The **complement of the sum of two logical inputs** is equal to the **product of its complements**. $\overline{A+B} = \overline{A}\,.\,\overline{B}$

Proof:

The Boolean equation for NOR gate is Y = $\overline{A+B}$

The Boolean equation for a bubbled AND gate is Y = $\overline{A}\,.\,\overline{B}$

A	B	A+B	$\overline{A+B}$	$\overline{A}$	$\overline{B}$	$\overline{A}\,.\,\overline{B}$
0	0	0	**1**	1	1	**1**
0	1	1	**0**	1	0	**0**
1	0	1	**0**	0	1	**0**
1	1	1	**0**	0	0	**0**

Thus De Morgan's First Theorem is proved. It also says that a NOR gate is equal to a bubbled AND gate.

The corresponding logic circuit diagram.

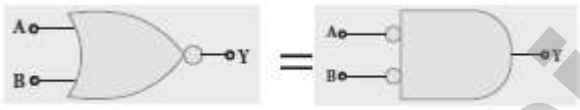

De Morgan's Second theorem:

The complement of the **product of two logical inputs** is equal to the **sum of its complements**. $\overline{A.B} = \overline{A} + \overline{B}$ 5

Proof:

The Boolean equation for NAND gate is Y = $\overline{A.B}$

The Boolean equation for a bubbled OR gate is Y = $\overline{A} + \overline{B}$

A	B	A.B	$\overline{A.B}$	$\overline{A}$	$\overline{B}$	$\overline{A} + \overline{B}$
0	0	0	**1**	1	1	**1**
0	1	0	**1**	1	0	**1**
1	0	0	**1**	0	1	**1**
1	1	1	**0**	0	0	**0**

Thus De Morgan's Second Theorem is proved. It also says, a NAND gate is equal to a bubbled OR gate.

The corresponding logic circuit diagram

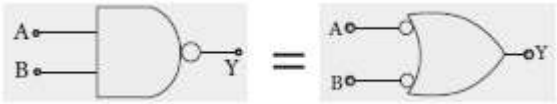

35 (a)

Comparison of emf of two cells:

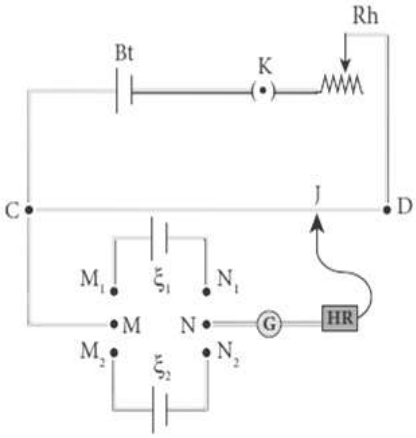

Potentiometer wire CD is connected to battery (Bt) and a key (K) in series. This is the primary circuit. The end C is connected to central terminal M of **DPDT switch and another central terminal** N is connected to jockey through a galvanometer G and high resistance HR. This is the secondary circuit.

The cell whose emf ξ_1 and ξ_2 to be compared are connected to M_1N_1 and M_2N_2 of DPDT switch. Initially the cell of emf ξ_1 is included in the **secondary circuit and the balancing length l_1 is found by adjusting jockey for zero deflection**. Similarly, the cell of emf ξ_2 is included in the secondary circuit and the balancing length l_2 is found. Let 'r' be the resistance per unit length and 'I' be the primary current, then by the principle

$$\xi_1 = \mathrm{I}rl_1 \quad ----(1)$$

$$\xi_2 = \mathrm{I}rl_2 \quad ----(2)$$

Divide equation (1) by (2),

$$\frac{\xi_1}{\xi_2} = \frac{\mathrm{I}rl_1}{\mathrm{I}rl_2} \; ; \frac{\xi_1}{\xi_2} = \frac{l_1}{l_2} \quad .....(3)$$

35 (b)

Fizeau's method:

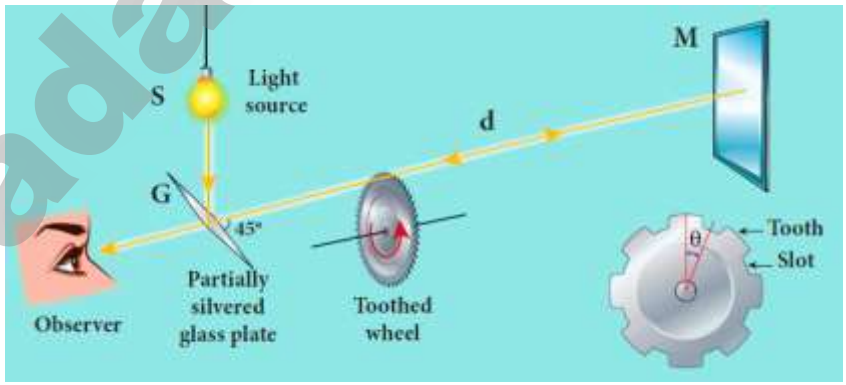

The light from the source S was first allowed to fall on a partially silvered glass plate G kept at an **angle of 45⁰** to the vertical. The light then allowed to pass through a rotating toothed-wheel with N - teeth and N - cuts.

The speed of rotation of the wheel could be varied through an external mechanism. The light passing through one cut in the wheel get reflected by a mirror M kept at a long distance 'd' **(about 8 km) from the toothed wheel**. If the toothed wheel was not rotating, the reflected light from the mirror would again pass through the same cut and reach the observer through G.

5

Kindly Send Me Your Study Materials To Us Email ID: padasalai.net@gmail.com

Working:

The angular speed of the rotation of the toothed wheel was increased until light passing through one cut would completely be blocked by the adjacent tooth. Let that angular speed be ω

The **total distance traveled by the light from the toothed wheel to the mirror and back to the wheel is '2d' and the time taken be 't'.**

Then the speed of light in air, $v = \frac{2\,d}{t}$

But the angular speed is, $\omega = \frac{\theta}{t}$

Here θ is angle between the tooth and the slot which is rotated by the toothed wheel within that time "t". Then,

$$\theta = \frac{\text{Total angle of the circle in radian}}{\text{Number of teeth+Number of cuts}}\ ;\ \theta = \frac{2\pi}{2N} = \frac{\pi}{N}$$

Hence, angular speed, $\omega = \frac{\left(\frac{\pi}{N}\right)}{t} = \frac{\pi}{Nt}$ (or) $t = \frac{\pi}{N\omega}$

Therefore the speed of light in air, $v = \frac{2\,d}{t} = \frac{2d}{\left(\frac{\pi}{N\omega}\right)}$; $v = \frac{2\,d\,N\omega}{\pi}$

The speed of light in air was determined as , $v = 2.99792 \times 10^8\ ms^{-1}$

36 (a)

Torque on a current loop:

Consider a rectangular current loop PQRS kept in uniform magnetic field $\vec{B}$ with its plane inclined to the field.

Let PQ = RS = a → Length of the loop ,

$QR = SP = b$ → Breadth of the loop

Let $\hat{n}$ be the unit vector normal to the plane of the current loop.

Let be the angle between normal vector $\hat{n}$ and magnetic field $\vec{B}$

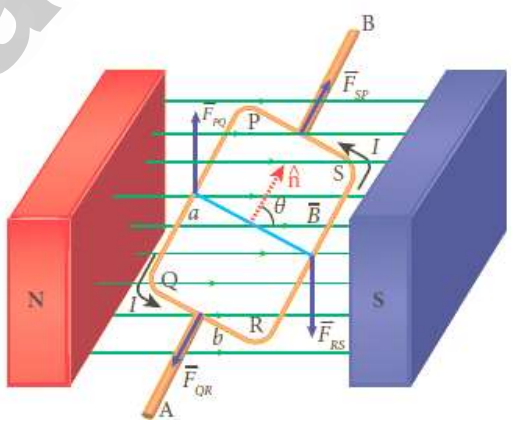

5

Force on section PQ,

Force on section PQ

$\vec{F}_{PQ} = I\,\overrightarrow{PQ} \times \vec{B}$; $\vec{F}_{PQ} = I(PQ)\,(-\hat{j}) \times B\hat{i}$; $= -\,I\,a\,B\,(\hat{j} \times \hat{i})$

$\vec{F}_{PQ} = I\,a\,B\hat{k}$ ..... (1)

Force on section QR

$\overrightarrow{QR} = b\cos(90^0 - \theta)\hat{i} + b\sin(90^0 - \theta)(\vec{k})$

$\overrightarrow{QR} = b\sin\theta\hat{i} - b\cos\theta\vec{k}$; $\vec{F}_{QR} = I\,\overrightarrow{QR} \times \vec{B}$

$\vec{F}_{QR} = I[b\sin\theta\hat{i} - b\cos\theta\vec{k}] \times B\hat{i}$

$= -\mathbf{I\,b\,B}\cos\theta\,(\hat{k} \times \hat{\imath})$

$\vec{F}_{QR} = -\mathbf{I\,b\,B}\cos\theta\,\hat{\jmath}$ ..... (2)

Force on section RS

$\vec{F}_{RS} = I\,\overrightarrow{RS} \times \vec{B}$; $\vec{F}_{RS} = I(RS)\,\hat{\jmath} \times B\hat{\imath}$; $= I\,a\,B\,(\hat{\jmath} \times \hat{\imath})$

$\vec{F}_{RS} = -\mathbf{I\,a\,B}\hat{k}$ ..... (3)

Force on section SP

$\overrightarrow{SP} = b\cos(90^0 + \theta)(-\hat{\imath}) + b\sin(90^0 + \theta)(\vec{k})$

$\overrightarrow{SP} = -\,b\sin\theta\hat{\imath} + b\cos\theta\vec{k}$; $\vec{F}_{SP} = I\,\overrightarrow{SP} \times \vec{B}$

$\vec{F}_{SP} = I[-b\sin\theta\hat{\imath} + b\cos\theta\vec{k}] \times B\hat{\imath}$

$= \mathbf{I\,b\,B}\cos\theta\,(\hat{k} \times \hat{\imath})$

$\vec{F}_{SP} = \mathbf{I\,b\,B}\cos\theta\,\hat{\jmath}$ ..... (4)

The **net force** on the rectangular loop is,

$\vec{F}_{res} = \vec{F}_{PQ} + \vec{F}_{QR} + \vec{F}_{RS} + \vec{F}_{SP}$

$\vec{F}_{res} = \mathbf{I\,a\,B}\hat{k} - \mathbf{I\,b\,B}\cos\theta\,\hat{\jmath} - \mathbf{I\,a\,B}\hat{k} + \mathbf{I\,b\,B}\cos\theta\,\hat{\jmath}$

$\vec{F}_{res} = \vec{0}$

Since the forces on sections QR and SP are equal in magnitude, opposite in direction and in same line, no torque produce by these two sections. On the other hand, forces on sections PQ and RS are equal and opposite but in different lines and hence these two forces constitute a couple.

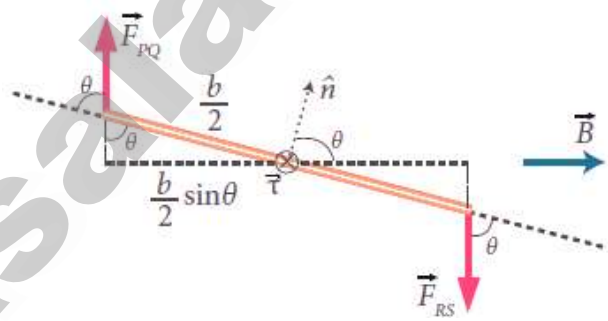

Hence the net torque produced by these two forces about the axis of the rectangular loop is

$\vec{\tau}_{res} = \overrightarrow{OA} \times \vec{F}_{PQ} + \overrightarrow{OB} \times \vec{F}_{RS}$

$\vec{\tau}_{res} = \frac{b}{2}[\cos(90^0 - \theta)(-\hat{\imath}) + \sin(90^0 - \theta)\hat{k}] \times I\,a\,B\hat{k}$

$+ \frac{b}{2}[\cos(90^0 - \theta)(\hat{\imath}) + \sin(90^0 - \theta)(-\hat{k})] \times -I\,a\,B\hat{k}$

$\vec{\tau}_{res} = \frac{b}{2}[-\sin\theta\,\hat{\imath} + \cos\theta\,\hat{k}] \times I\,a\,B\hat{k} - \frac{b}{2}[\sin\theta\,\hat{\imath} - \cos\theta\,\hat{k}] \times I\,a\,B\hat{k}$

$\vec{\tau}_{res} = \frac{b}{2}\sin\theta\;I\,a\,B\,(-\hat{\jmath}) + 0 - \frac{b}{2}\sin\theta\;I\,a\,B\,(-\hat{\jmath})$

$\vec{\tau}_{res} = -\frac{b}{2}\sin\theta\;I\,a\,B\,\hat{\jmath} + \frac{b}{2}\sin\theta\,I\,a\,B\,\hat{\jmath}$

$\vec{\tau}_{res} = a\,b\,I\,B\sin\theta\,\hat{\jmath}$; $\vec{\tau}_{res} = A\,I\,B\sin\theta\,\hat{\jmath}$ ..... (5)

But magnetic dipole moment; $p_m = I\,A$, then

Kindly Send Me Your Study Materials To Us Email ID: padasalai.net@gmail.com

	$\vec{\tau}_{res} = p_m B \sin\theta\,\hat{j} = \vec{p}_m \times \vec{B}$ **Special Case:** i) $\theta = 90^0$, then $\vec{\tau}_{res} = p_m B\hat{j} = A\,I\,B\hat{j} = max.$ ii) $\theta = 0^0$, then $\vec{\tau}_{res} = 0$ iii) $\theta = 180^0$, then $\vec{\tau}_{res} = 0$		
36 (b)	***Photo emissive cell:*** It consists of an evacuated glass or quartz bulb in which two metallic electrodes a cathode and an anode are fixed. The **cathode C is semi-cylindrical in shape and is coated with a photo sensitive material.** The anode A is a thin rod or wire kept along the axis of the semi- cylindrical cathode. A potential difference is applied between the anode and the cathode through a galvanometer G. 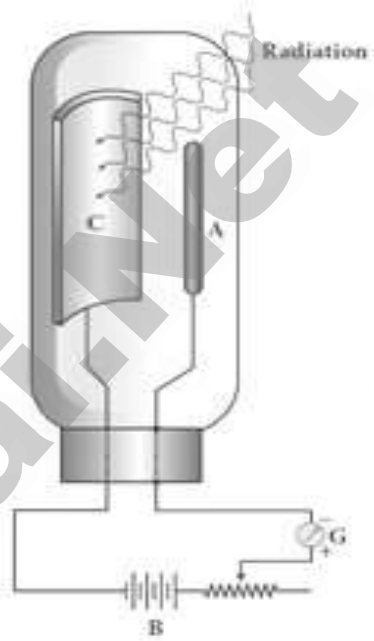 **Working:** When **cathode is illuminated, electrons are emitted from it.** These **electrons are attracted by anode** and hence a **current is produced** which is measured by the galvanometer. For a given cathode, the magnitude of the current depends on (1) the **intensity to incident radiation** and (2) the **potential difference between anode and cathode.** ***Applications of photo cells:*** 1) Photo cells have many applications especially as **switches and sensors.** **2) Automatic lights that turn on when it gets dark use photocells**, as well as street lights that switch on and off according to whether it is night or day. 3) Photo cells are used for **reproduction of sound in motion pictures**. 4) They are used as timers to **measure the speeds of athletes** during a race. 5) Photo cells of exposure meters in **photography are used to measure the intensity** of the given light and to calculate the exact time of exposure.		5

Kindly Send Me Your Study Materials To Us Email ID: padasalai.net@gmail.com

37(a)	***(i) EMF induced by changing area enclosed by the coil:*** Consider a conducting rod of length 'l' moving with a velocity 'v' towards left on a rectangular metallic frame work. The whole arrangement is placed in a uniform magnetic field $\vec{B}$ acting perpendicular to the plane of the coil inwards. As the rod moves from AB to DC in a time 'dt', the area enclosed by the loop and hence the magnetic flux through the loop decreases. 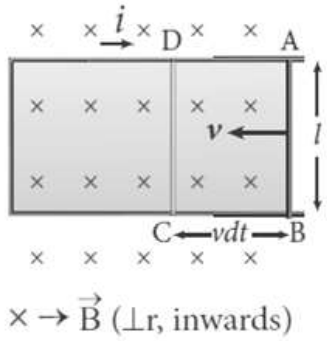 The change in magnetic flux in time 'dt' is $d\phi_B = B\,dA = B(l \times v\,dt)$ $\frac{d\phi_B}{dt} = B\,lv$ This change in magnetic flux results and induced emf and it is given by, $\in = \frac{d\phi_B}{dt}$; $\in = B\,lv$ This emf is called motional emf. **The direction of induced current is found to be clock wise from Fleming's right hand rule.** (ii) A = 0.03 m²; B = 0.4 T; f = 20 rps; R = 4 Ω Area covered in 1 sec = Area of the disc × frequency = 0.03 × 20 ; = 0.6 m² Induced emf, ε = Rate of change of flux $\varepsilon = \frac{d\phi_B}{dt} = \frac{d(BA)}{dt}$; $\varepsilon = \frac{0.4 \times 0.6}{1}$; ε = 0.24 V		5
37 (b)	(i) ***Brewster's law:*** The angle of incidence at which a beam of un-polarized light falling on a transparent surface is reflected as a beam of plane polarized light is called **polarizing angle or Brewster's angle** (i_P). Sir David Brewster found that, at polarizing angle, the reflected and transmitted rays are perpendicular to each other. Let, incident polarizing angle = i_P 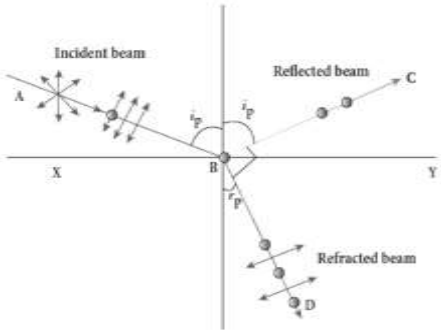 Angle of refraction = r From the figure, $i_p + 90^0 + r_p = 180^0$; $r_P = 90^0 - i_p$ – – – –(1) From Snell's law $\frac{\sin i_p}{\sin r_p} = n$; $\frac{\sin i_p}{\sin(90^0 - i_p)} = n$		5

Kindly Send Me Your Study Materials To Us Email ID: padasalai.net@gmail.com

$$\frac{\sin i_p}{\cos i_p} = n \;;\; \tan i_p = n$$

This relation is known as Brewster's law. This law states that, **the tangent of the polarizing angle for a transparent medium is equal to its refractive index.**

(ii) Brewster's law, $\tan i_P = n$

$\tan i_P = 1.65$; $i_P = \tan^{-1} 1.65$;

$i_P = 58.8^0$

The inclination with the horizontal surface is **($90^0 - 58.8^0$) = 31.2^0**

38 (a)

Law of radioactivity:

At any instant t, **the number of decays per unit time, called rate of decay $\left(\frac{dN}{dt}\right)$ is proportional to the number of nuclei (N) at the same instant. This is called law of radioactive decay.**

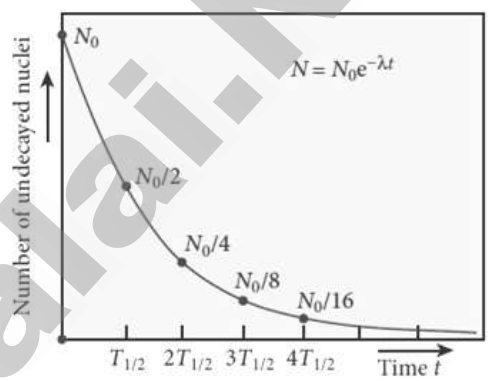

Expression:

Let N_0 be the number of nuclei at initial time (t = 0)

Let 'N' be the number of un-decayed nuclei at any time 't'

If 'dN' be the number of nuclei decayed in time 'dt' then,

rate of decay = $\frac{dN}{dt}$

From law of radioactivity, $\frac{dN}{dt} \propto N$

(or) $\frac{dN}{dt} = -\lambda N$ - - - - - (1)

Here, $\lambda \rightarrow$ **decay constant**

Decay constant (λ) is **different for different radioactive sample and the negative sign in the equation implies that the N is decreasing with time.**

By rewriting the equation (1), we get $\frac{dN}{N} = -\lambda dt$

Integrating on both sides, $\int_{N_0}^{N} \frac{dN}{N} = -\lambda \int_0^t dt$;

$$[\text{In } N]_{N_0}^{N} = -\lambda t$$

$$[\text{In } N - \text{In } N_0] = -\lambda t \;;\; \text{In}\left[\frac{N}{N_0} = -\lambda t\right]$$

5

Kindly Send Me Your Study Materials To Us Email ID: padasalai.net@gmail.com

	Taking exponential on both sides, $\frac{N}{N_0} = e^{-\lambda t}$ $N = N_0 e^{-\lambda t}$ – – – – – (2) Equation (2) is called **the law of radioactive decay**. Here the number of atoms is decreasing exponentially over the time. This implies that **the time taken for all the radioactive nuclei to decay will be infinite.**		
38 (b)	***Absorption spectra:*** **When light is allowed to pass through an absorbing substance, then the spectrum obtained** is known as absorption spectrum. It is characteristic of the absorbing substance. Absorption spectrum is classified into three types; ***(i) Continuous absorption spectrum:*** **When the light is passed through a medium, it is dispersed by the prism, we get continuous absorption spectrum**. For instance, when we pass **white light through a blue glass plate**, it absorbs everything except blue. This is an example for continuous absorption spectrum. ***(ii) Line absorption spectrum*:** **When light from incandescent lamp is passed through cold gas**, the spectrum obtained through the dispersion due to the prism is line absorption spectrum. **For example, when light from carbon arc is made to pass through sodium vapour, a continuous spectrum of carbon arc with two dark lines in the yellow region of sodium vapour is obtained.** ***iii) Band absorption spectrum:*** When the **white light is passed through the iodine vapour, dark bands on continuous bright background** is obtained. This is known as band absorption spectra. It is also obtained when white light is passed through **diluted solution of blood or chlorophyll or through certain solutions of organic and inorganic compounds.**		5

Padasalai.Net

Kindly Send Me Your Study Materials To Us Email ID: padasalai.net@gmail.com