www.Padasalai.Net - No.1 Educational Website in Tamilnadu

12505

No. of Printed Pages: 4

Register Number | | | | | | | |

12

REVISION EXAMINATION (NUMERICAL PROBLEMS)

PART – III

PHYSICS

Time Allowed : 3.00 Hours] [Maximum Marks : 70

Instructions : (1) Check the question paper for fairness of printing. If there is any lack of fairness, inform the Hall Supervisor immediately.

(2) Use **Blue** or **Black** ink to write and underline and pencil to draw diagrams.

PART – II

Note : Answer any fourteen questions. Question No. 7 is compulsory. 14x2=28

1. The de-Broglie wavelength of a neutron of kinetic energy K is λ. When its kinetic energy. is 4 K, what is the de-Broglie wavelength of the neutron? **(MARCH – 2019)**
2. The number of turns in the primary of an ideal transformer is 400 and that in the secondary 2000. If the output power from the secondary at 1000 V is kW then calculate the voltage and current in the primary coil. **(MARCH – 2019)**
3. An ideal transformer has 460 and 40,000 turns in the primary and secondary coils respectively. Find the voltage developed per turn of the secondary coil if the transformer is connected to a 230 V AC main. **(MARCH – 2020)**
4. Two materials X and Y are magnetized whose intensity of magnetization are 500 Am^{-1} and 2000 Am^{-1} respectively. The magnetizing field is 1000 Am^{-1}. What is the ratio between the susceptibilities of the two material? **(MARCH – 2020)**
5. An electron in Bohr's hydrogen atom has an energy of –3.4 eV. What is the angular momentum of the electron? **(MARCH – 2020)**
6. Calculate the cut-off wavelength and cut-off frequency of X-rays from an X-ray tube of accelerating potential 20,000 V. **(SEPTEMBER – 2020, MAY – 2022)**
7. Potential in a given region is given as a function of distance x, $V=5(x^2+x)$ Volt. Find the electric field when x = 1 cm. **(SEPTEMBER – 2020)**
8. If an electric field of magnitude 570 NC^{-1}. Is applied in the copper wire, find the experienced by the electron. **(SEPTEMBER – 2020)**
9. Compute the speed of electromagnetic wave in a medium if the amplitudes of electric and magnetic fields in it are 3×10^4 NC^{-1} and 2×10^{-4} T respectively. **(SEPTEMBER – 2020)**
10. Find the Polarizing angle for glass of refractive index 1.5. **(SEPTEMBER – 2021)**
11. Dielectric strength of air is 4×10^6 Vm^{-1}. Suppose the radius of a hollow sphere in the Van de Graaff generator is R = 0.4 m, calculate the maximum potential difference created by this Van de Graaff generator. **(SEPTEMBER – 2021)**

[Turn Over

MRPHYSICS SMHSS,THIRUVANNAMALAI

Kindly send me your questions and answerkeys to us : Padasalai.Net@gmail.com

www.Padasalai.Net - No.1 Educational Website in Tamilnadu

12. Calculate the momentum of an electron with kinetic energy 2 eV. **(SEPTEMBER – 2021)**
13. A copper wire of cross-sectional area 0.5 mm^2 carries a current of 0.2 A. If the free electron density of copper is $8.4 \times 10^{28}\ m^{-3}$ then compute the drift velocity of free electrons. **(SEPTEMBER – 2021)**
14. Calculate the radius of $^{197}_{79}Au$ nucleus. **(MAY – 2022)**
15. The angle of minimum deviation for the equilateral prism is 40^0. Find the refractive index of the material of the prism. **(MAY – 2022)**
16. Pure water has refractive index 1.33. What is the speed of light through it? **(JULY – 2022)**
17. Calculate the equivalent resistance for the circuit which is connected to 12 V battery and find the potential difference across 2Ω and 4Ω resistors in the circuit. **(JULY – 2022)**

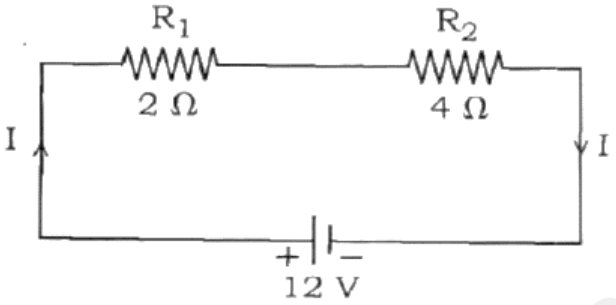

18. The relative magnetic permeability of the medium is 2.5 and the relative electrical permittivity of the medium is 2.25. Compute the refractive index of the medium. **(JULY – 2022)**
19. The self-inductance of an air-core solenoid is 4.8 mH. If its core is replaced by iron core, then its self-inductance becomes 1.8 H. Find out the relative permeability of iron.
20. Determine the wavelength of light emitted from LED which is made up of GaAsP semiconductor whose forbidden energy gap is 1.875 eV. Mention the colour of the light emitted (Take $h = 6.6 \times 10^{-34}$ Js).

MR.H.SICS SPMHSS,TIRUVANNAMALAI

PART – III

Note : Answer any fourteen questions. Question No. 39 is compulsory. 14x3=42

21.

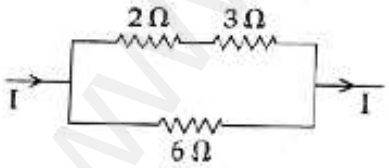

The heat developed across 6 Ω resistor per second is 50 J. Calculate the heat developed per second across 2 Ω resistor in the given electric circuit. **(MARCH – 2019)**

22. Half lives of two radioactive elements are 12 hrs and 16 hrs respectively. If at any instant, the ratio of the amounts of radioactive substance is 2 : 1 , then after 2 days, What will be the ratio of the un-decayed portions? **(MARCH – 2019)**

Kindly send me your questions and answerkeys to us : Padasalai.Net@gmail.com

23. In Young's double slit experiment two coherent sources of intensity ratio of 64:1, produce interference fringes. Calculate the ratio of maximum and minimum intensities. **(MARCH – 2019)**

24. Tow light sources of equal amplitudes interfere with each other. Calculate the ratio of maximum and minimum intensities. **(MARCH – 2019)**

25. The resistance of a nichrome wire at 0^0 C is 10Ω. If its temperature coefficient of resistance is $0.004/^0C$, find its resistance at boiling point of water. Comment on the result. **(MARCH – 2020)**

26. In the circuit shown in the figure, the input voltage V_i is 20 V, V_{BE} = 0 V and V_{CE} = 0 V. What are the values of I_B, I_C, β? **(MARCH – 2020)**

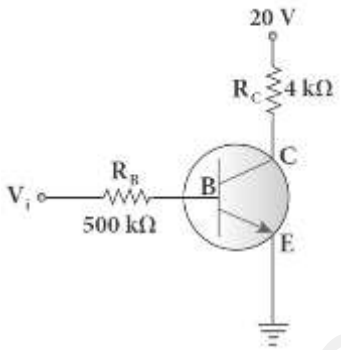

27. Half lives of two radioactive elements A and B are 20 minutes and 40 minutes respectively. Initially the samples have equal number of nuclei. Calculate the ratio of decayed number of A and B nuclei after 80 minutes. **(SEPTEMBER – 2020)**

28. An 500 μH, $\frac{80}{\pi^2}$ pF capacitor and a 628 Ω resistor are connected to form a series RLC circuit. Calculate the resonant frequency and Q-factor of this circuit at resonance. **(SEPTEMBER – 2020)**

29. Write the output (Y) Boolean expression for the following circuit with inputs A, B and C. **(SEPTEMBER – 2020)**

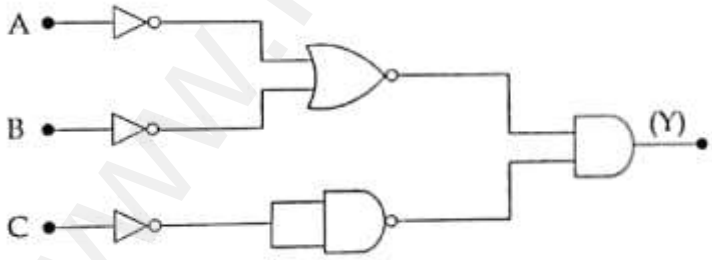

30. The repulsive force between two magnetic poles in air is $9x10^{-3}$ N. If the two poles are equal in strength and are separated by a distance of 10 cm, calculate the pole strength of each pole. **(SEPTEMBER – 2021)**

31. $_{92}U^{235}$ nucleus emits 2α particles, 3β particles and 2γ particles. What is the resulting atomic number and mass number? **(SEPTEMBER – 2021)**

Kindly send me your questions and answerkeys to us : Padasalai.Net@gmail.com

www.Padasalai.Net - No.1 Educational Website in Tamilnadu

32. Find the :
    (i) Angular momentum
    (ii) Velocity of the electron revolving in the 5th orbit of hydrogen atom.
    ($h = 6.6 \times 10^{-34}$ Js; $m = 9.1 \times 10^{-31}$ kg) **(MAY – 2022)**
33. Find the impedance of a series RLC circuit, if the inductive reactance, capacitive reactance and resistance are 184 Ω, 144 Ω, and 30 Ω respectively. Also calculate the phase angle between voltage and current. **(MAY – 2022)**
34. Light travels from air into a glass slab of thickness 50 cm and refractive index 1.5.
    (a) What is the speed of light in the glass slab?
    (b) What is the time taken by the light to travel through the glass slab? **(JULY – 2022)**
35. Calculate the number of nuclei of carbon-14 undecayed after 22,920 years if the initial number of carbon-14 atoms is 10,000. The half –life of carbon-14 is 5730 years. **(JULY – 2022)**
36. An electron moving perpendicular to a uniform magnetic field 0.500 T undergoes circular motion of radius 2.50 mm. What is the speed of electron? **(JULY – 2022)**
37. Calculate the time required for 60% of a sample of radon undergo decay. (Given $T_{1/2}$ of radon =3.8 days.)
38. A radiation of wavelength 300 nm is incident on a silver surface. Will photoelectrons be observed?
39. A circular loop of area $5 \times 10^{-2} m^2$ rotates in a uniform magnetic field of 0.2 T. If the loop rotates about its diameter which is perpendicular to the magnetic field as shown in figure. Find the magnetic flux linked with the loop when its plane is (i) normal to the field (ii) inclined 60^0 to the field and (iii) parallel to the field.

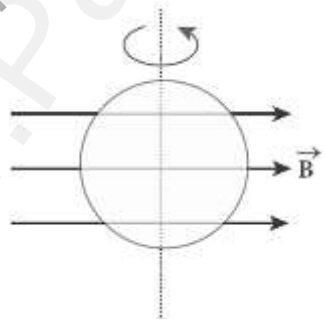

40. The rod given in the figure is made up of two different materials

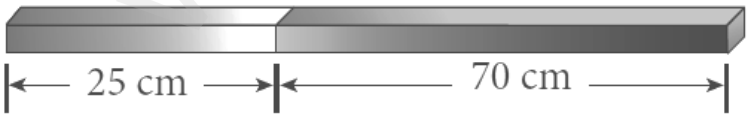

Both have square cross sections of 3 mm side. The resistivity of the first material is 4×10^{-3} Ωm and that of second material has resistivity of 5×10^{-3} Ωm. What is the resistance of rod between its ends?

- 0 0 0 –

MRPHYSICS,GRMHSS,TIRUVANNAMALAI

Kindly send me your questions and answerkeys to us : Padasalai.Net@gmail.com

REVISION EXAMINATION (NUMERICAL PROBLEMS)
ANSWER KEY

Note : Answer any fourteen questions. Question No. 7 is compulsory. 14x2=28

1. de Broglie wavelength $\lambda = \frac{h}{\sqrt{2mE}}$ Here E = K

   de Broglie wavelength $\lambda = \frac{h}{\sqrt{2mK}}$ E = 4K

   de Broglie wavelength $\lambda' = \frac{h}{\sqrt{2m4k}}$; $\lambda' = \frac{h}{2\sqrt{2mk}}$ (or) $\lambda' = \frac{h}{2}$

2. $\frac{E_S}{E_P} = \frac{N_S}{N_P}$; $E_P = 1000 \times \frac{400}{2000}$; $E_P = 200$ V

   Ideal Transformer = $E_P I_P = E_S I_S$

   $I_P = \frac{10000}{200}$; $I_P = 50A$

3. i) Secondary voltage, $V_S = \frac{V_P N_S}{N_P} = \frac{230 \times 40000}{460}$; $V_S = 20000V$

   Secondary voltage per turn, $\frac{V_S}{N_S} = \frac{20000}{40000}$; = 0.5 V

4. The susceptibility of material X is $\chi_m X = \frac{|\vec{M}|}{|\vec{H}|} = \frac{500}{1000} = 0.5$

   The susceptibility of material Y is $\chi_m Y = \frac{|\vec{M}|}{|\vec{H}|} = \frac{2000}{1000} = 2$

   Since, susceptibility of material Y is greater than that of material X, material Y can be easily magnetized than X. 0.5 : 4 or 1 : 4

5. Total Energy $E_n = \frac{-13.6}{-3.4} = 4$: $n^2 = 4$: n = 2

   Angular momentum $L = \frac{nh}{2\pi}$; $= \frac{h}{\pi}$; $= \frac{6.63 \times 10^{-34}}{3.14}$ $L = 2.11 \times 10^{-34}$ kgm^2s^{-1}

6. The cut-off wavelength of the characteristic x-rays is $\lambda_0 = \frac{12400}{V}$ Å

   $= \frac{12400}{20000}$ Å ; = 0.62 Å

   The corresponding frequency is $v_0 = \frac{c}{\lambda_0}$; $= \frac{3 \times 10^8}{0.62 \times 10^{-10}}$

   $= 4.84 \times 10^{18}$ Hz

7. $E = \frac{dv}{dx}$; $= \frac{d}{dx}(5x^2 + 5x)$; = 10x + 5 ; x = 1 ; E = 10 +5 =15 Vcm^{-1}

MRPHYSICS, GRMHSS, TIRUVANNAMALAI

8. a = $\frac{Ee}{m}$; = $\frac{570 \text{ x } 1.6 \text{ x } 10^{-19}}{9.1 \text{ x } 10^{-31}}$; a= 100.29 x 10^{12} ms^{-2}

9. speed of the electromagnetic wave in a medium is

$v = \frac{3 \text{ x } 10^4}{2 \text{ x } 10^{-4}}$ = 1.5 x 10^8 ms^{-1}

10. Brewster's law, tani_P = n

For glass, tani_P = 1.5; i_P = $\tan^{-1}$ 1.5; i_P = 56.3^0

11. The electric field on the surface of the sphere (by Gauss law) is given by

E = $\frac{1}{4\pi\varepsilon_0}\frac{Q}{R^2}$

The potential on the surface of the hollow metallic sphere is given by

V = $\frac{1}{4\pi\varepsilon_0}\frac{Q}{R}$ = ER ; With V_{max} = E_{max} R

Here E_{max} = 4 x $10^6 \frac{V}{m}$. So, the maximum potential difference created is given by V_{max} = 4 × 10^6 × 0.4 ; = 1.6 × 10^6 V (or) 1.6 million volt

12. Momentum of the electron is

p = $\sqrt{2mK}$ = $\sqrt{2 \text{ x} 9.1 \text{ x } 10^{-31} \text{x } 2 \text{ x } 1.6 \text{ x } 10^{-19}}$; $\sqrt{58.24 \text{ x } 10^{-50}}$

p = 7.63 x 10^{-25} kg ms^{-1}

13. The relation between drift velocity of electrons and current in a wire of c ross-sectional area A is V_d = $\frac{I}{neA}$; = $\frac{0.2}{8.4\text{x } 10^{28} \text{ x } 1.6 \text{ x } 10^{-19} \text{ x } 0.5 \text{ x } 10^{-6}}$ ‘

= $\frac{2 \text{ x } 10^{-3}}{6.72}$ V_d = 0.03 x 10^{-3} ms^{-1}

14. (R = $R_0 A^{\frac{1}{3}}$), R = 1.2 x 10^{-15} x $(197)^{\frac{1}{3}}$

= 6.97 x 10^{-15}m (or) R = 6.97 F

15. Equation for refractive index is, n = $\frac{sin\left(\frac{A+D}{2}\right)}{Sin\left(\frac{A}{2}\right)}$

Substituting the values, n = $\frac{sin\left(\frac{60^0+40^0}{2}\right)}{Sin\left(\frac{60^0}{2}\right)}$; = $\frac{sin\,(50^0)}{Sin\,(30^0)}$; = $\frac{0.766}{0.5}$; = 1.532;

The refractive index of the material of the prism is, n = 1.532

16. n = $\frac{c}{v}$; v = $\frac{c}{n}$; $v = \frac{3 \text{ x } 10^8}{1.33}$; = 2.25 x 10^8 ms^{-1}

Light travels with a speed of 2.25 × 10^8 ms^{-1} through pure water.

MRPHYSICS SRMHSS TIRUVANNAMALAI

17. Since the resistors are connected in series, the effective resistance in the circuit = 2 Ω + 4 Ω = 6 Ω

The Current I in the circuit $= \frac{V}{R_{eq}} = \frac{12}{6}$ = 2 A

Voltage across 4Ω resistor

$V_1 = IR_1$ = 2A x 2 Ω = 4 V

Voltage across 6 Ω resistors

$V_2 = IR_1$ = 2A x 4 Ω = 8 V

18. Refractive index of the medium, n = $\sqrt{\epsilon_r \mu_r}$; = $\sqrt{2.25 \text{ x } 2.5}$;

= $\sqrt{5.625}$; n =2.37

19. L_{air} = 4.8 x 10^{-3} H ; L_{iron} = 1.8 H ; $L_{air} = \mu_0 n^2 A\, l$ = 4.8 x 10^{-3} H

$L_{iron} = \mu n^2 A\, l$; $\mu_0 \mu_r n^2 A\, l$ = 1.8 H

$\therefore \mu_r = \frac{L_{iron}}{L_{air}} = \frac{1.8}{4.8 \text{ x } 10^{-3}}$ = 375

20. $E_g = \frac{hc}{\lambda}$; Therefore, $\lambda = \frac{hc}{E_g}$; = $\frac{6.6 \text{ x } 10^{-34} \text{ x } 3 \text{ x } 10^{8}}{1.875 \text{ x } 1.6 \text{ x } 10^{-19}}$

= 660 nm

The wavelength 660 nm corresponds to red colour light.

MRPHYSICS,SRMHSS,TIRUVANNAMALAI

Note : Answer any fourteen questions. Question No. 39 is compulsory. 14x3=42

21. $H = \frac{V^2 t}{R}$; $= \frac{V^2 x\ 1}{6}$; $= V^2 = 6H$; $V^2 = 6 \times 50$; $V^2 = 300$

$I_1 = \frac{V}{(R_1+R_2)}$; $= \frac{\sqrt{300}}{5}$

$H = I^2Rt$; $= \frac{300}{25} \times 2 \times 1$; $H = 24J$

22. $N_1 = (N_0)_1 (½)^{n1}$ --------1

$N_2 = (N_0)_2 (½)^{n2}$ --------2

$n_1 = \frac{2 \times 24}{12} = 4$; $n_2 = \frac{2 \times 24}{16} = 3$ --------3

$n_1 = \frac{2 \times 24}{12} = 4$;

$\frac{(N_0)1}{(N_0)2} = \frac{2}{1}$; $\frac{N_1}{N_2} = \frac{2}{1}\frac{\left(\frac{1}{2}\right)4}{\left(\frac{1}{2}\right)3}$; $\frac{N_1}{N_2} = 2x\ \frac{1}{2}$; $\frac{N_1}{N_2} = 1$ $N_1 : N_2 = 1 : 1$

23. $\frac{I_1}{I_2} = \frac{{a_1}^2}{{a_2}^2} = \frac{64}{1} = \frac{a_1}{a_2} = \frac{8}{1}$ $a_1 = 8a_2$

$\frac{I_{max}}{I_{min}} = \frac{(a_1+a_2)^2}{(a_1-a_2)^2}$; $= \frac{(8a_2+a_2)^2}{(8a_2-a_2)^2}$; $= \frac{(9a_2)^2}{(7a_2)^2}$; $= \frac{81}{49}$

$I_{max} : I_{min} : 81 : 49$

24. $I\ \alpha\ 4a^2 cos^2\left(\frac{\phi}{2}\right)$ (or) $I = 4\ I_0\ cos^2\left(\frac{\phi}{2}\right)$

Resultant Intensity for maximum : $\phi = 0$, $\cos\theta = 1$; $I_{max}\ \alpha\ 4a^2$

Resultant Intensity for minimum : $\phi = \pi$, $\cos\frac{\pi}{2} = 0$; $I_{min.}\ \alpha\ 0$

$I_{max} = I_{min} = 4a^2 : 0$

25. Temperature of boiling point of water,

$R_T = R_0 (1 + \alpha T)$; $= 10[1+(0.004 \times 100^0]$

$R_T = 10(1+0.4) = 10 \times 1.4$; $R_T = 14\ \Omega$

As the temperature increases the resistance of the wire also increases.

26. $I_B = \frac{V_i}{R_B} = \frac{20\ V}{500\ k\Omega}$; $= 40\mu A$ $[\therefore\ V_{BE} = 0V]$

$I_C = \frac{V_{CC}}{R_C} = \frac{20\ V}{4\ k\Omega}$; $= 5mA$ $[\therefore\ V_{CE} = 0V]$

$\beta = \frac{I_C}{I_B} = \frac{5\ mA}{40\mu A}$; $\beta = 125$

MR.PHYSICS,SRMHSS,TIRUVANNAMALAI

27. Decayed part of A atom : $\frac{15}{16}$ or 93.75 %

Decayed part of B atom : $\frac{3}{4}$ or 75 %

Ratio between A and B atom $\frac{N_A}{N_B} = \frac{5}{4}$ or $N_A = N_B = 5 : 4$

$N_A = N_B = 1.25\%$ (or)

80 minutes = 4 half-lives of A = 2 half live of B

Let the initial number of nuclei in each sample be N.

N_A after 80 minutes = $\frac{N}{2^4}$

Number of A nuclides decayed = $\frac{15}{16}$ N

N_B after 80 minutes = $\frac{N}{2^4}$

Number of B nuclides decayed = $\frac{3}{4}$ N

Required ratio = $\frac{15}{16} \times \frac{4}{3} = \frac{5}{4}$; $N_A : N_B = 5 : 4$

28. $f = \frac{1}{2\pi\sqrt{LC}}$; $= \frac{1}{2\pi\sqrt{500 \times 10^{-6} \times \frac{80}{\pi L} \times 10^{-12}}}$

$= \frac{1}{2\sqrt{40000 \times 10^{-10}}}$; $= \frac{10000 \times 10^3}{4}$; f = 2500kHz

Q factor = $\frac{\omega_r L}{R}$; $\frac{2 \times 3.14 \times 2500 \times 10^3 \times 500 \times 10^{-6}}{628}$

Q factor = 12.5

29. Output of A and B = $\overline{\bar{A} + \bar{B}}$ or $\overline{\overline{AB}}$ or AB

Output of C = C

Output of circuit Y = ABC

30. The force between two poles are given by $\vec{F} = k\frac{q_{mA}q_{mB}}{r^2}\hat{r}$

The magnitude of the force is $F = k\frac{q_{mA}q_{mB}}{r^2}$

Given : $F = 9 \times 10^{-3}$N, r = 10 cm = 10×10^{-2} m

Therefore, $9 \times 10^{-3} = 10^{-7} \times \frac{q_m^2}{(10 \times 10^{-2})^2} \Longrightarrow 30\ NT^{-1}$

MR.PHYSICS,SRMHSS,TIRUVANNAMALAI
www.Padasalai.Net

31. The α- decay process symbolically written as

$^{A}_{Z}X \rightarrow {}^{A-4}_{Z-2}Y + {}^{4}_{2}He$.

(e.g.) $^{235}_{92}U \rightarrow 2\alpha \;\; {}^{235-8}_{92-4}X + 2{}^{4}_{2}He$; $^{227}_{88}X + 2{}^{4}_{2}He$

In β− decay,

$^{A}_{Z}X \rightarrow {}_{Z+1}^{A}Y + {}_{-1}^{0}e + \bar{\nu}$. (e.g.) $_{88+3}^{227}Y + 3\,{}_{-1}^{0}e$; $^{227}_{91}Y + 3\,{}_{-1}^{0}e$

During gamma decay there is **no change in atomic number and mass number**.

$^{A}_{Z}X^{*} \rightarrow {}^{A}_{Z}X$ +gamma rays (γ)

32. **(i) Angular momentum is given by** $= n\hbar = \frac{nh}{2\pi}$; $= \frac{5 \text{ x } 6.6 \text{ x} 10^{-34}}{2 \text{ x } 3.14}$

= 5.25 x 10^{-34} kgm^2s^{-1}

(ii) Velocity is given by velocity, $= \frac{l}{mr}$; $= \frac{(5.25 \text{ x } 10^{-34} \text{ kgm}^2\text{s}^{-1})}{(9.1 \text{ x } 10^{-31} \text{ kg})\,(13.25 \text{ x } 10^{-10} \text{ m})}$

$v =$ **4.4 x 10^5 ms^{-1}**

33. (i) The impedance is Impedance, Z = $\sqrt{R^{2+(X_L-X_C)^2}}$

= $\sqrt{30^{2+}(184-144)^2}$; = $\sqrt{900+1600}$

Impedance, Z = 50 Ω

(ii) Phase angle is tan ϕ = $\frac{X_L-X_C}{R}$; $\frac{184-144}{30}$; = 1.33 ; ϕ = 53.1^0

34. Speed of light in glass is, $v = \frac{c}{n}$; $= \frac{3 \text{ x } 10^8}{1.5}$; = 2 x 10^8 ms^{-1}.

Time taken by light to travel through glass slab is,

$t = \frac{d}{v}$; $= \frac{0.5}{2 \text{ x } 10^8}$ = 2.5 x 10^{-9} s

Optical path, $d' = nd$ = 1.5 × 0.5; = 0.75m ; =75 cm

Light would have travelled 25 cm more (75 cm – 50 cm) in vacuum by the same time had there not been a glass slab.

35. To get the time interval in terms of half-life, n = $\frac{t}{T_{1/2}} = \frac{22920 \text{ yr}}{5730 \text{ yr}}$ = 4

The number of nuclei remaining un-decayed after 22,920 years,

N = $\left(\frac{1}{2}\right)^n N_o$; = $\left(\frac{1}{2}\right)^4$ x 10000 ; N = 625

36. Velocity of the electron, $v = |q|\frac{rB}{m}$

$v = 1.60 \text{ x } 10^{-19} \text{ x } \frac{2.50 \text{ x } 10^{-3} \text{x } 0.500}{9.11 \text{ x } 10^{-31}}$;

v = 2.195 x 10^8 ms^{-1}

www.Padasalai.Net
NRPHYSICS SRMHSS TIRUVANNAMALAI

37. Here consider R_n – 222 with a half-life of 3.823 days.
From decay equation, Current amount = Initial amount x $(2)^{-n}$

$N = N_0\,(2)^{-n}$; $\frac{N}{N_0} = (2)^{-\frac{t}{T_{1/2}}}$

$\log\left(\frac{N}{N_0}\right) = \log(2) \times \left(-\frac{t}{T_{1/2}}\right)$; $\frac{\log\left(\frac{N}{N_0}\right)}{\log(2)} = \left(-\frac{t}{T_{1/2}}\right)$

$t = \frac{\log(0.4)}{\log(2)} \times (-3.823)$; time t = 5.05 days.

38. Energy of the incident photon is $E = h\nu = \frac{hc}{\lambda}$ (in Joules)

$E = \frac{hc}{\lambda e}$ (in eV)

Substituting the known values, we get

$= \frac{6.634 \times 10^{-34} \times 3 \times 10^{8}}{300 \times 10^{-9} \times 1.6 \times 10^{-19}}$; $= \frac{19.902 \times 10^{-26}}{480 \times 10^{-28}}$; 0.04146×10^{2}

E = 4.14 eV

The work function of silver = 4.7 eV. Since the energy of the incident photon is less than the work function of silver, photoelectrons are not observed in this case.

39. $A = 5 \times 10^{-2}\ m^2$; $B = 0.2$ T

(i) $\theta = 0^0$;

$\phi_B = BA\cos\theta$

$= 0.2 \times 5 \times 10^{-2} \times \cos 0^0$; $\phi_B = 1 \times 10^{-2}$ Wb.

(ii) $\theta = 90^0 - 60^0 = 30^0$;

$\phi_B = BA\cos\theta$;

$= 0.2 \times 5 \times 10^{-2} \times \cos 30^0$; $\phi_B = 1 \times 10^{-2} \times \frac{\sqrt{3}}{2} = 8.66 \times 10^{-3}$Wb.

(iii) $\theta = 90^0$; $\phi_B = BA\cos 90^0 = 0$

40. Resistance of first material $R_1 = \frac{\rho_1 l_1}{A}$; $= \frac{4 \times 10^{-3} \times 25 \times 10^{-2}}{9 \times 10^{-6}}$; $\frac{1000}{9}\Omega$

Resistance of second material $R_2 = \frac{\rho_2 l_2}{A}$; $= \frac{5 \times 10^{-3} \times 70 \times 10^{-2}}{9 \times 10^{-6}}$; $\frac{3500}{9}\Omega$

The two materials are in series, their effective resistance

$R_{tot} = R_1 + R_2$; $= \frac{1000}{9} + \frac{3500}{9}$; $\frac{4500}{9}$; $R_{tot} = 500\ \Omega$

RAJENDRAN M, M.Sc., B.Ed., C.C.A.,
P.G. TEACHER IN PHYSICS, SRMHSS,
KAVERIYAMPOONDI, TIRUVANNAMALAI – 606603.

MRPHYSICS SRMHSS, TIRUVANNAMALAI
www.Padasalai.Net