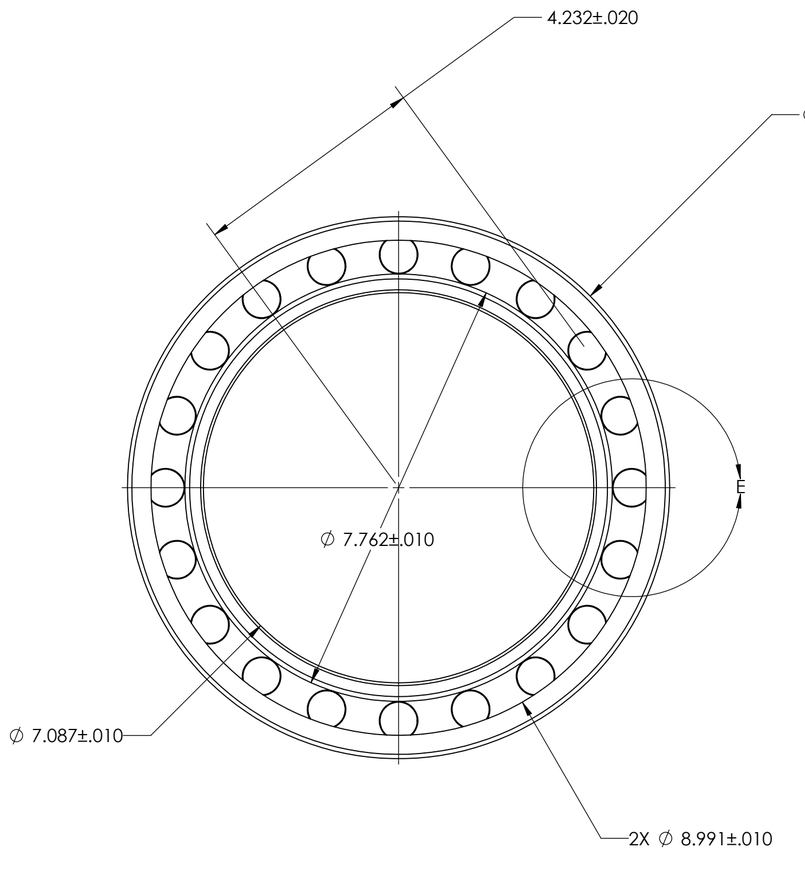


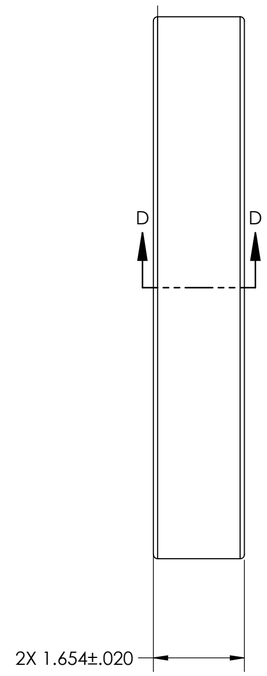


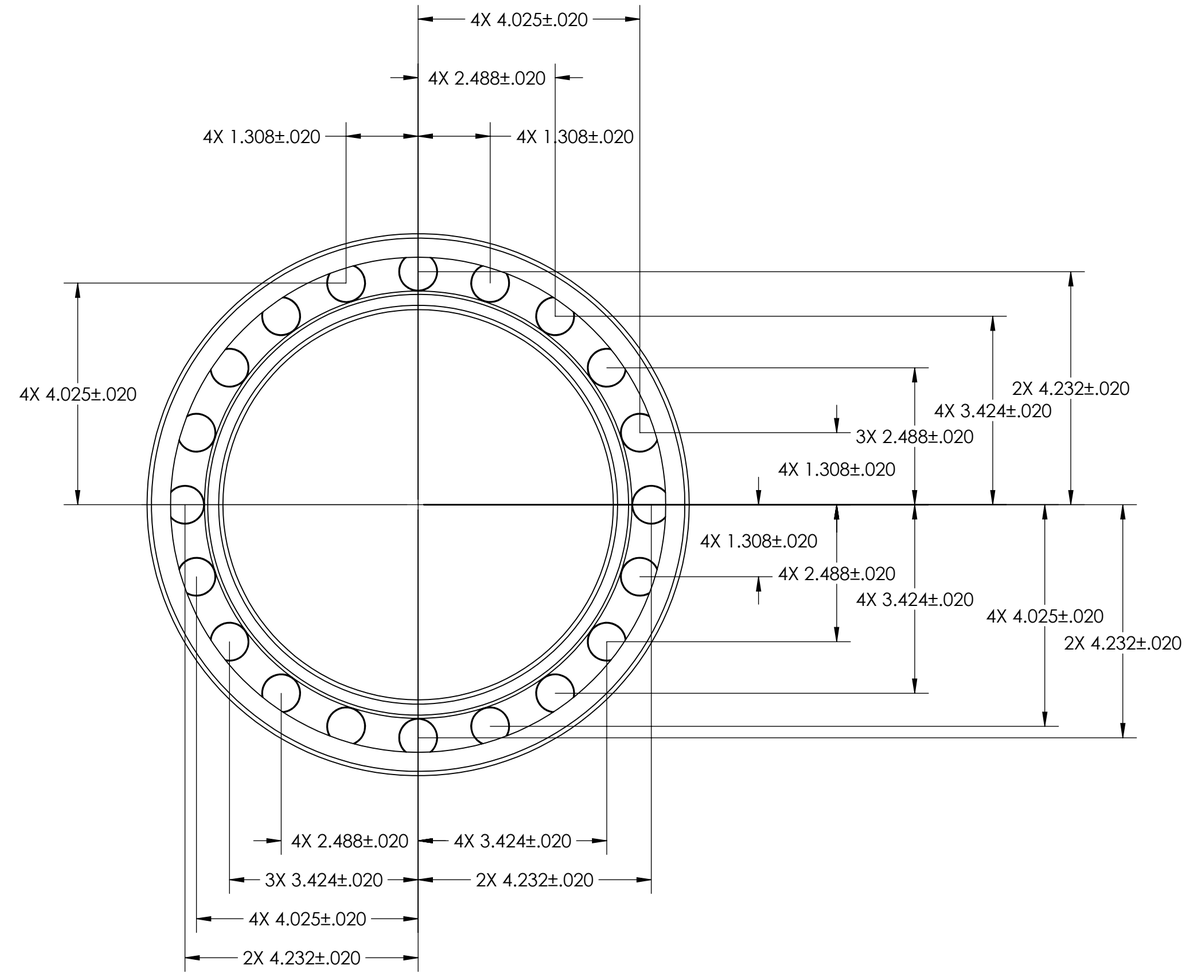


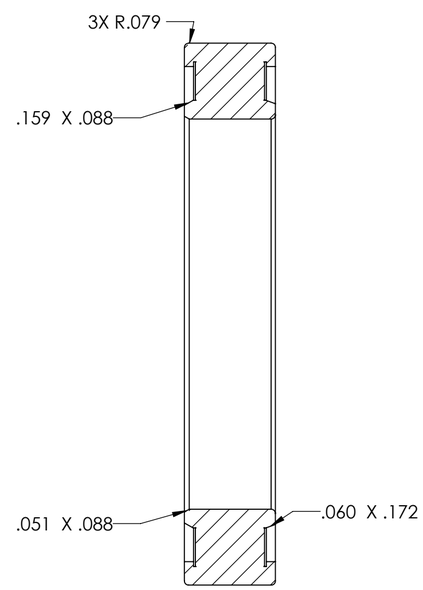


SECTION D-D

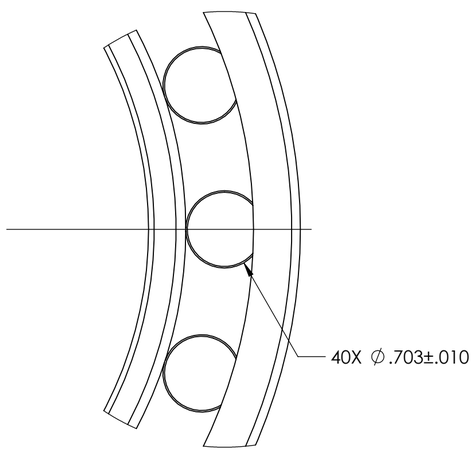


DETAIL E
SCALE 1 : 1