NOTE: Description and data herein contains information and other knowledge of a proprietary nature with this company. No permission or authorization for utilization of such proprietary values has been granted, in whole or in part, for duplication, dissemination, transmittal, use or disclosure by any other manner or means to any firm or person at any time, past, present, or future, unless evident by prior written agreement with Diamond. The fact that Diamond Antenna and Microwave Corp. may have furnished information of a similar or in any way supplanting information, is to be regarded by implication neither as an inducement to, nor as a waiver of, any rights of the person or entity receiving the information, to manufacturing any rights or permission to manufacture, use, or sell any patented invention or proprietary data herein that in any way be related thereto.

LTR	DESCRIPTION	APVD	DATE
A	ECN 3365, UPDATED PER ICD 198546-2 REV F TO G	CB	5/10/05
B	PER ECN 3376, CORRECTED BACKSHELL P/N	CB	6/8/05
C	ECN 3406, CHNG EMS SPEC 198546-2 REV G TO REV H	CB	7/20/05
D	ECN 3466, ADD SHRINK TUBING, UPDATE REF TABLE	CB	10/25/05
E	ECN 3525, ADD TORQUE: VERIFY EVERY 10TH UNIT, UPDATE REF TABLE	CB	2/17/06
F	ECN 3861, ADDED CASE TO CONN ELECT RESISTANCE	CB	9/11/07

SPECIFICATIONS - ROTARY JOINT:

RF	CHANNEL 1 & 2
FREQUENCY (GHz):	12.2-12.7
POWER:	1.0 W
VSWR (MAX.):	1.5:1
INSERTION LOSS (dB) (MAX.):	0.9O
INSERTION LOSS WOW:	0.1 dB Pk-Pk
INSERTION PHASE WOW	2° Pk-Pk
ISOLATION:	40 dB MIN
INTERMODULATION	40 dB MIN

ELECTRICAL

CONTACT RESISTANCE, SLIPRING OVER FULL DYNAMIC RANGE, INCLUDING CABLES
FOR RINGS 1-4, 150 MILIOHMS MAX
FOR RINGS 5-12, 80 MILIOHMS MAX

STATOR CASE TO ROTOR CASE:	310 MILIOHMS MAX
SHELL OF CONN TO CASE GND:	310 MILIOHMS MAX
RATED CURRENT, SLIPRING	SEE TABLE
RATED VOLTAGE, SLIPRING	SEE TABLE

SPECIFICATIONS - MECHANICAL/ENVIRONMENTAL:

WEIGHT	965 GRAMS MAX
ROTATION:	BI-DIRECTIONAL
STARTING TORQUE:	50 OZ-IN. MAX
ANGULAR VELOCITY:	0 TO 60° /SEC
ANGULAR ACCELERATION:	0 TO 70° /SEC/SEC
OPERATING LIFE:	5,000,000 REVOLUTIONS @ 30°/SEC MIN
RINGS:	12 PER TABLE (GOLD)
BRUSHES:	REDUNDANT (GOLD)
RF CHANNELS:	2
RF JUNCTION TYPE:	NON-CONTACTING
AIRLINE:	PORT AT EACH END
MATERIAL:	ALUMINUM ALLOY
FINISH- ALUMINUM:	IRIDITE PER MIL-C-5541, CL 1A
FINISH- STAINLESS STEEL:	PASSIVATE PER QQ-P-35
MARKING:	STENCIL AS SHOWN PER MIL-STD-130
LABEL:	LABEL IS TO INCLUDE THE FOLLOWING AS A MINIMUM: P/N: 54-2255-0 S/N: _____ DATE CODE: _____ EMS #: 198546-2

SLIP RING CIRCUIT REQUIREMENTS

RING NUMBER	DESCRIPTION	RATED VOLTAGE	CONTINUOUS CURRENT	SURGE* CURRENT	WIRE SIZE	PIN DESIGNATIONS
1	RS-422 DATA (TX-L)	100V	50 mA	150 mA	22 AWG	L
2	RS-422 DATA (TX-H)	100V	50 mA	150 mA	22 AWG	K
3	RS-422 DATA (RX-H)	100V	50 mA	150 mA	22 AWG	H
4	RS-422 DATA (RX-L)	100V	50 mA	150 mA	22 AWG	J
5	POWER, PRIMARY	100V	3 AMP	9 AMP	20 AWG	B
6	POWER, PRIMARY	100V	3 AMP	9 AMP	20 AWG	C
7	POWER, PRIMARY	100V	3 AMP	9 AMP	20 AWG	D
8	RETURN, PRIMARY POWER	100V	3 AMP	9 AMP	20 AWG	E
9	RETURN, PRIMARY POWER	100V	3 AMP	9 AMP	20 AWG	F
10	RETURN, PRIMARY POWER	100V	3 AMP	9 AMP	20 AWG	G
11	SPARE	100V	3 AMP	9 AMP	20 AWG	A
12	CHASSIS GROUND	100V	3 AMP	9 AMP	20 AWG	M

* MAXIMUM DURATION OF SURGE SHALL BE 100 MILLISECONDS AT A RATE OF ONE TIME PER 10 MINUTES

ENVIRONMENTAL REQUIREMENTS - RTCA/DO160D

The slipring/rotary joint assembly shall be designed to meet all performance specifications when subjected to the following environmental conditions.

ENVIRONMENT	DO-160D SECTION	CONDITION
TEMPERATURE & ALTITUDE	4.0	CATEGORY F2 (OPERATIONAL -55° TO +70° C) (NON-OPERATIONAL -55° TO +85° C) (0 TO 55,000 FT.)
TEMPERATURE VARIATION	5.0	CATEGORY A (± 10° C/MIN)
HUMIDITY	6.0	CATEGORY C
OPERATIONAL SHOCK	7.0	CATEGORY A (6G)
VIBRATION	8.0	FIGURE 8-1, CURVE C
FUNGUS RESISTANCE	13.0	CATEGORY F
AUDIO FREQUENCY CONDUCTED SUSCEPTIBILITY (REF ONLY)	18.0	CATEGORY A
INDUCED SIGNAL SUCEPTIBILITY	19.0	CATEGORY B
RADIO FREQUENCY SUCEPTIBILITY (RADIATED & CONDUCTED) (REFERENCE ONLY)	20.0	CATEGORY V
EMISSION OF RADIO FREQUENCY ENERGY (REFERENCE ONLY)	21.0	CATEGORY H
LIGHTENING INDUCES TRANSIENT SUCEPTIBILITY (REFERENCE ONLY)	22.0	N/A
LIGHTENING DIRECT EFFECTS	23.0	N/A
ICING	24.0	N/A
ELECTROSTATIC DISCHARGE	25.0	ESD EXPOSURE PER CATEGORY A

MINIMUM TEST REQUIREMENTS

VSWR -VS- FREQUENCY IN SPECIFIED BAND.

INSERTION LOSS -VS- FREQUENCY IN SPECIFIED BAND.

INSERTION LOSS WOW AT BAND CENTER AND BAND EDGES.

PHASE WOW

ISOLATION -VS- FREQUENCY IN SPECIFIED BAND

STARTING TORQUE: AT -55° C, VERIFY EVERY 10th UNIT

VERIFICATION OF DIMENSIONAL REQUIREMENTS.

ALL TESTS AT ROOM TEMPERATURE UNLESS OTHERWISE SPECIFIED.

TEST DATA SHEETS SHALL BE SUBMITTED FOR EACH UNIT.

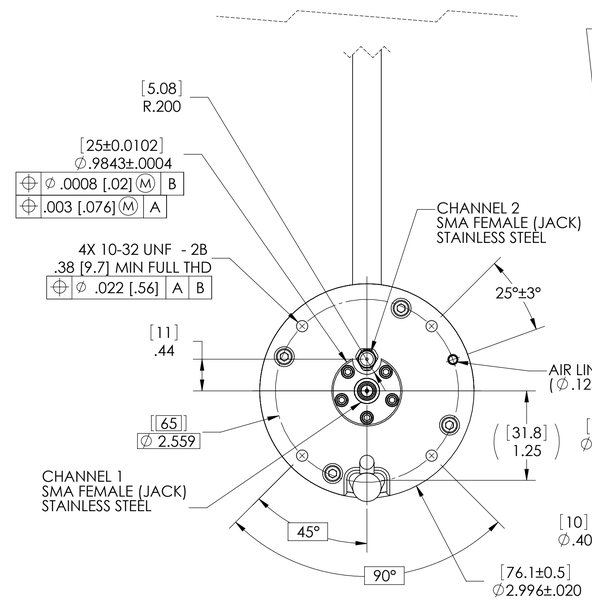

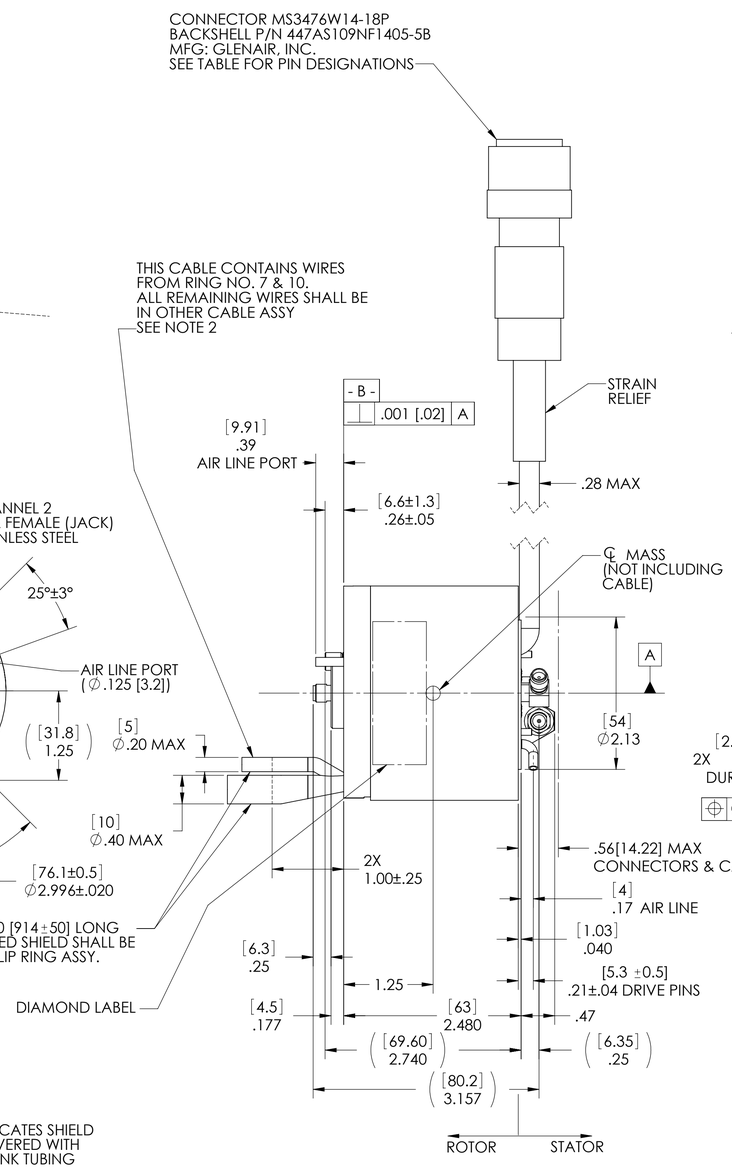

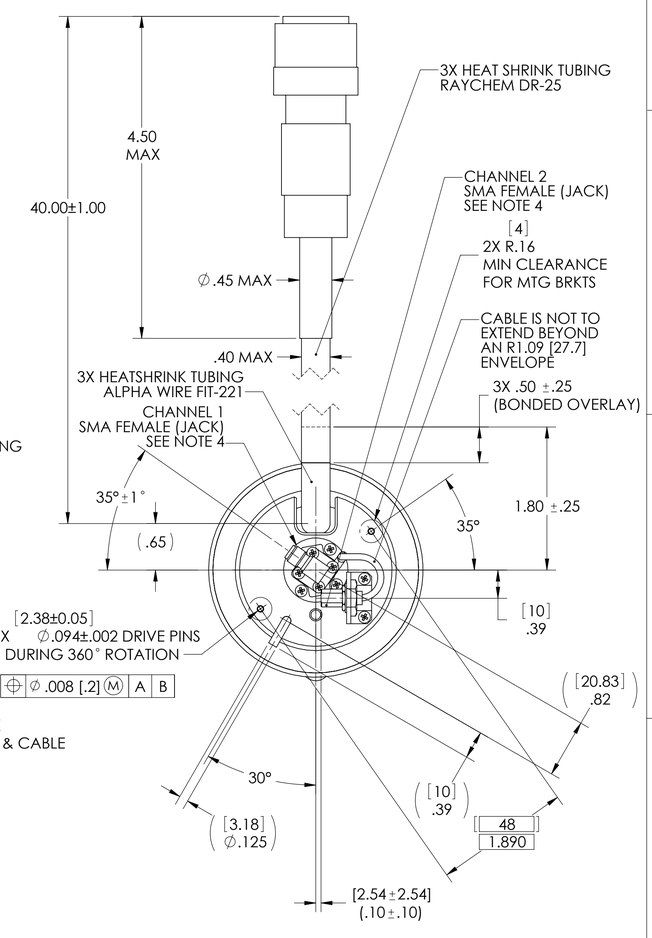

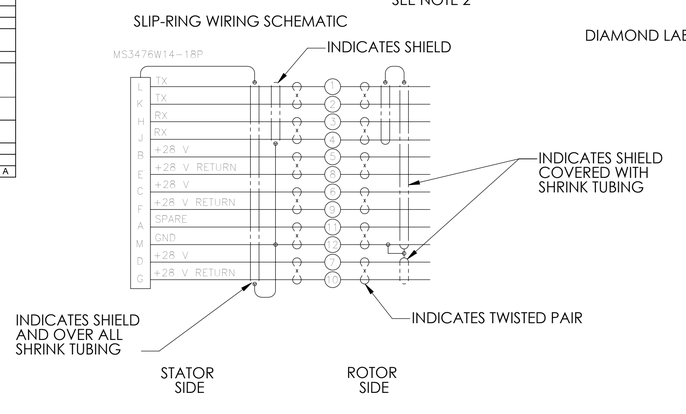

NOTES:

1. ALL DIMENSIONS IN [ ] ARE MILLIMETERS.
2. EACH WIRE SHALL BE PERMANENTLY MARKED OR LABLED WITH CORRESPONDING RING NUMBER.
3. WIRES SHALL BE ENCLOSED WITH BRAIDED SHIELD AND SHIELD GROUNDED TO HOUSING. HEAT SHRINK TUBING SHALL BE ADDED OVER BRAIDED SHIELD.
4. GOLD PLATE PER MIL-G-45204, TYPE 1 OR 2, GRADE C, CL 1.

REFERENCE	
EMS DWG REV H +CN09	DIAMOND DWG
ICD 198546-1	54-2255-0
ICD 198546-2	56-2255-0
ICD 198546-3	58-2255-0
ICD 198546-4	59-2255-0

MATERIAL	DRAFTING: R PROVENCHER	2/28/05	DIAMOND ANTENNA & MICROWAVE CORP LITTLETON, MA 01460
FINISH	CHECKED BY: CB	3/1/05	TITLE: ROTARY JOINT/SLIPRING
	APPROVED BY: PC	3/1/05	
DIMENSIONS ARE IN INCHES UNLESS OTHERWISE SPECIFIED: SURFACE FINISH 63 REMOVE ALL BURRS AND SHARP EDGES .005 MAX TOLERANCES ARE: FRACTIONS ±1/64 DECIMALS 2 PLACES ±.03 3 PLACES ±.01 ANGLES ±1/2°	CUST. APPROV:		SIZE: D · CODE IDENT: 01882 · DRAWING NUMBER: 56-2255-0 · REV F
	GOVT. APPROV		SCALE 1:1 · CAD FILE: · SHEET 1 OF 1