Advanced Driver Assistance Systems (ADAS) Lane Detection Project

ECE 771 Algorithms For Parameter and State Estimation

Andrew Hoang

December 1, 2015

Initial Video Imaging

Preprocessed Video Imaging

- Converted video images into gray scale format

Edge Detection

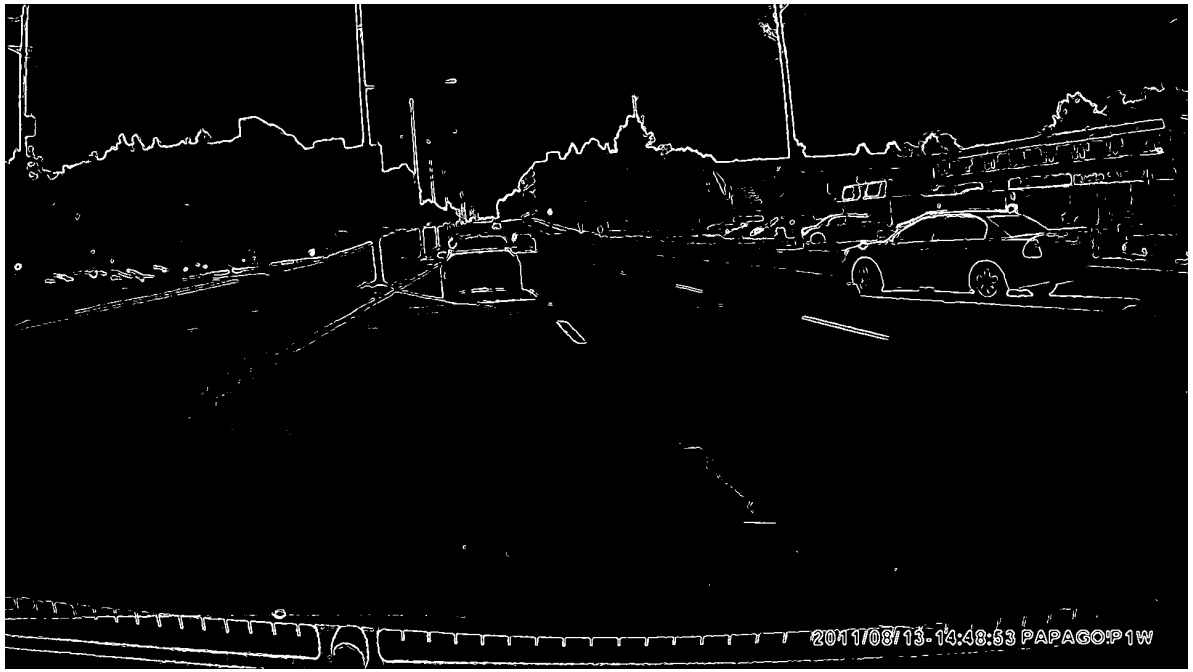

- Edge detection using the Sobel Algorithm method

Region of Interest

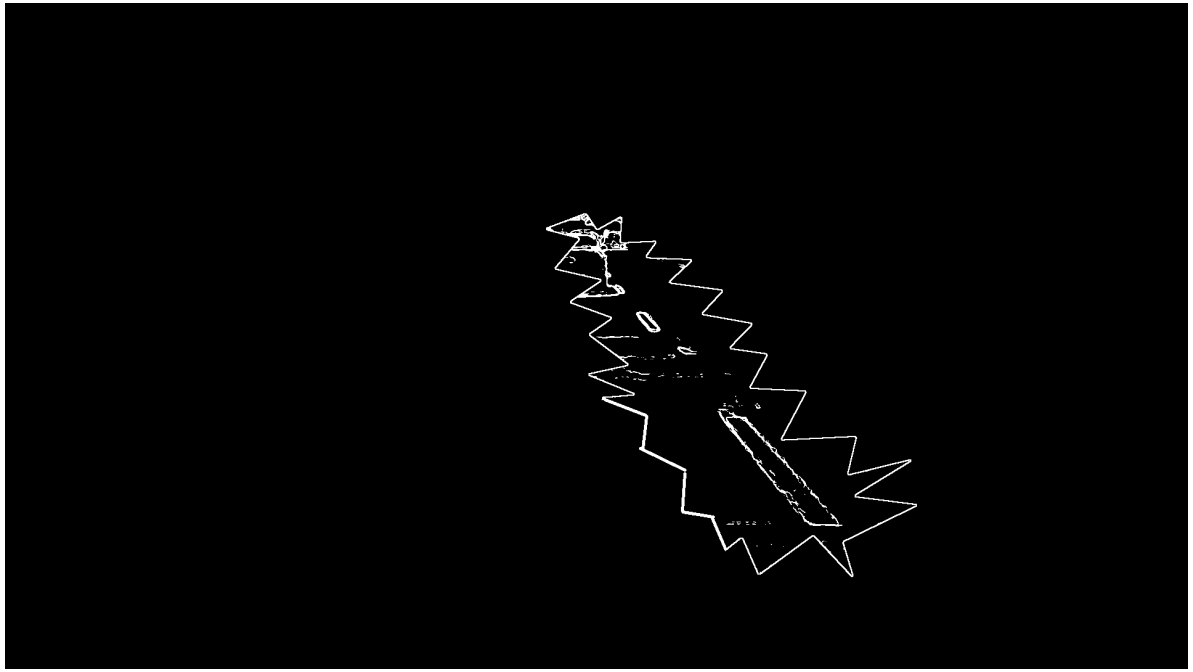

- A bit of image manipulation
- Narrowed down region of interest to a very small subset of space

Hough Transform and Hough Line

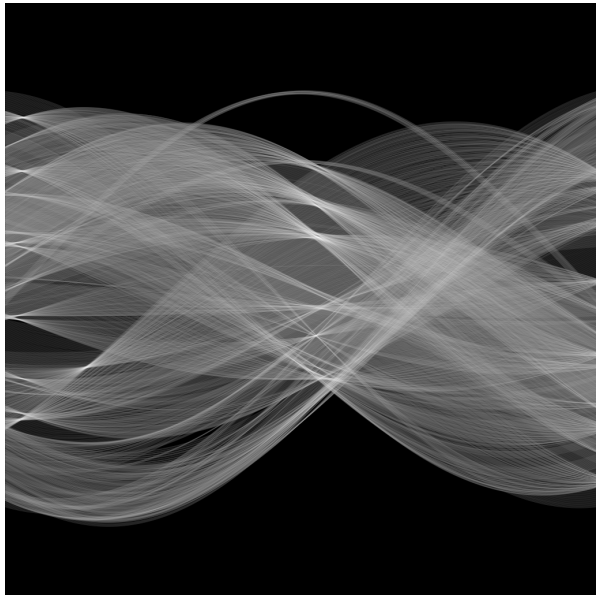

Figure: http://www.jayrambhia.com/assets/images/hough2.png

- Hough Transform converts image pixel mapping into a $[\rho\ \theta]$ context
- Taking the local maxima (peaks) of the Hough Transform to find lane line

Kalman Filtered Data of Hough Line Result

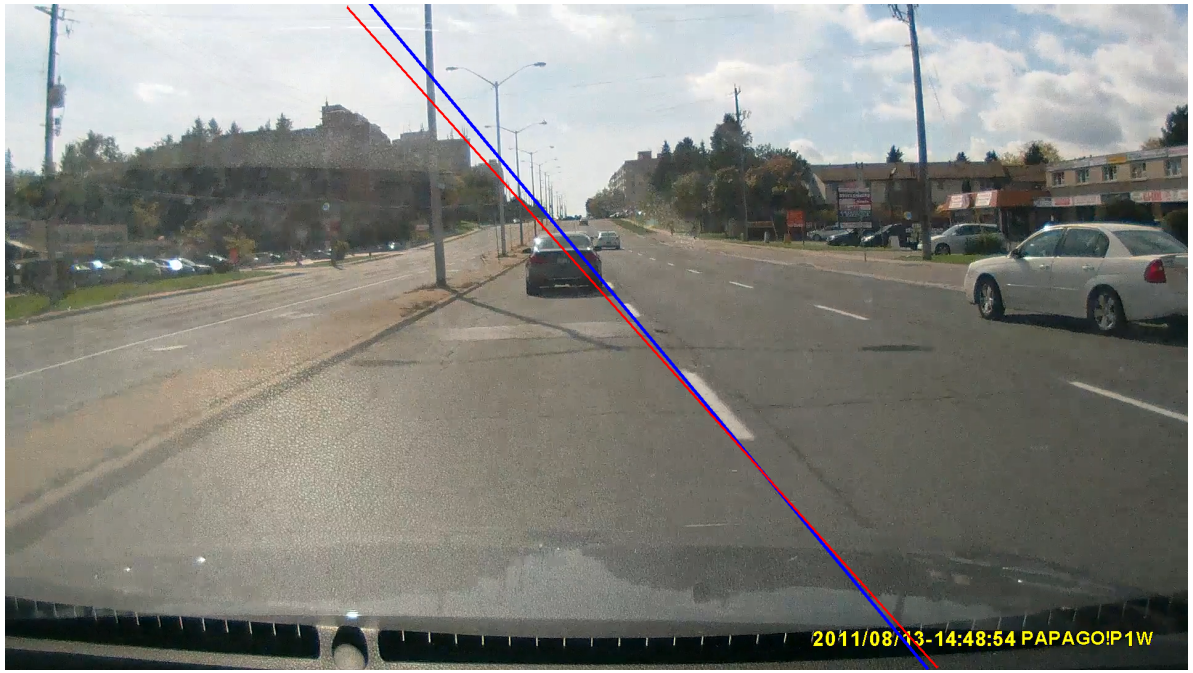

- Kalman filter estimate alongside Hough Line
- Both Kalman filter and Hough Line here producing good results

Erratic Hough Line Measurement Vs. Kalman Filtered Line

- Kalman filter still staying with a somewhat questionable prediction
- Hough Transform can be seen to produce odd local maxima results

Hough Values

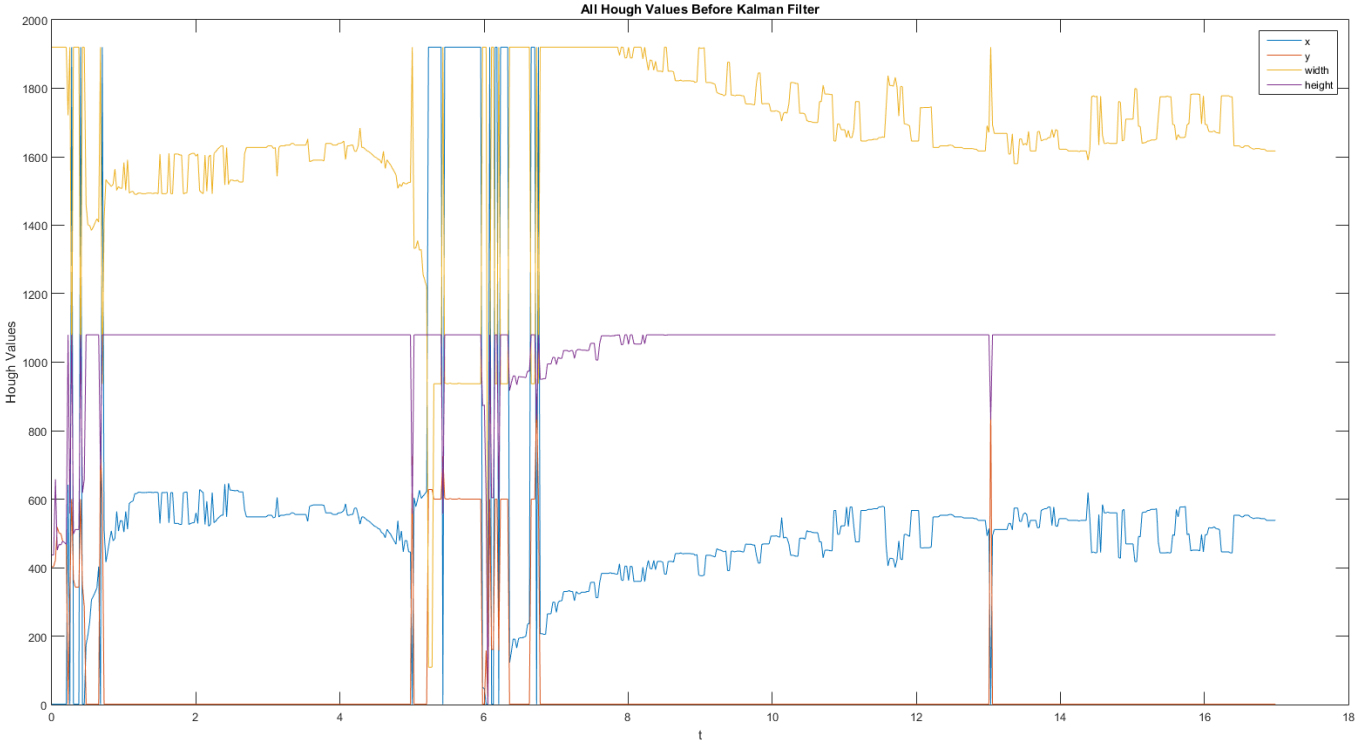

Figure: Before Kalman Filter Applied to Hough Lines

Hough Values

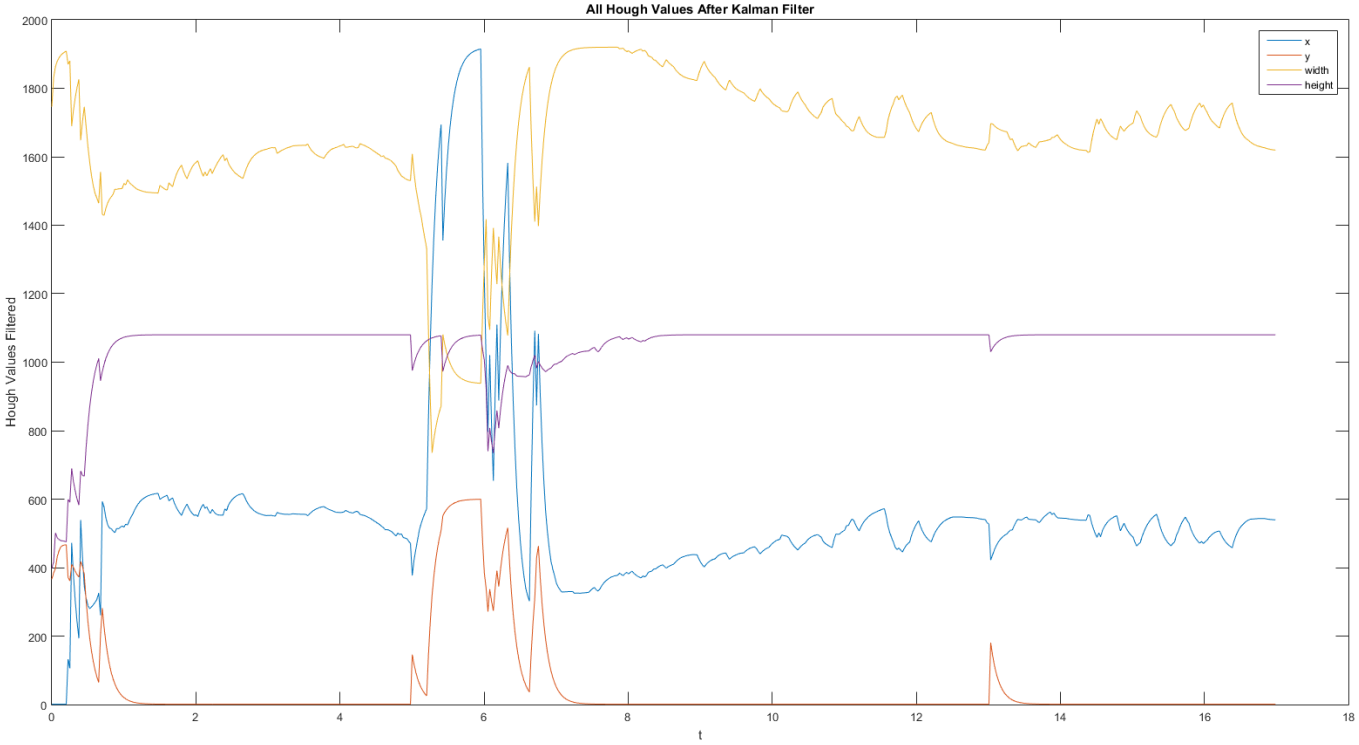

Figure: After Kalman Filter Applied to Hough Lines

X Values

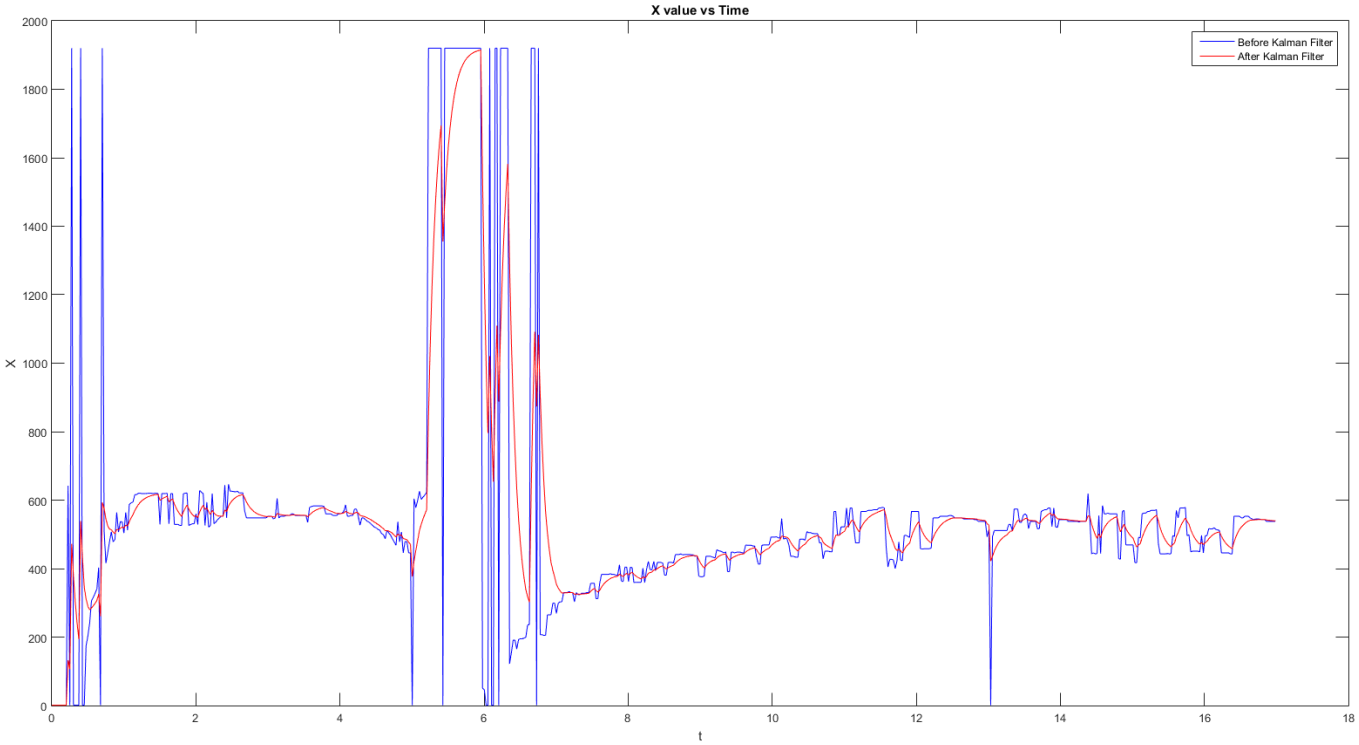
X value vs Time
Before Kalman Filter
After Kalman Filter
X
t
0
200
400
600
800
1000
1200
1400
1600
1800
2000
0
2
4
6
8
10
12
14
16
18

Y Values

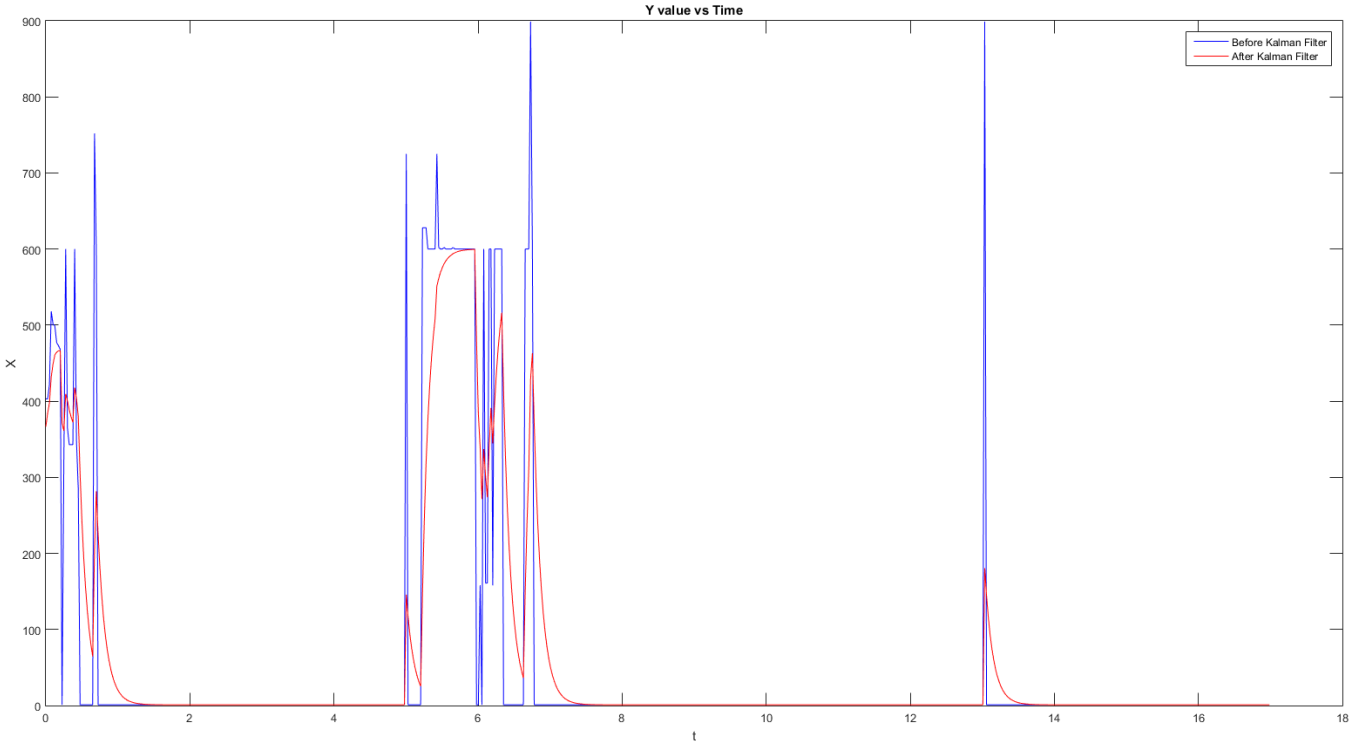
Y value vs Time
Before Kalman Filter
After Kalman Filter
X
t
0
100
200
300
400
500
600
700
800
900
0
2
4
6
8
10
12
14
16
18

Width Values

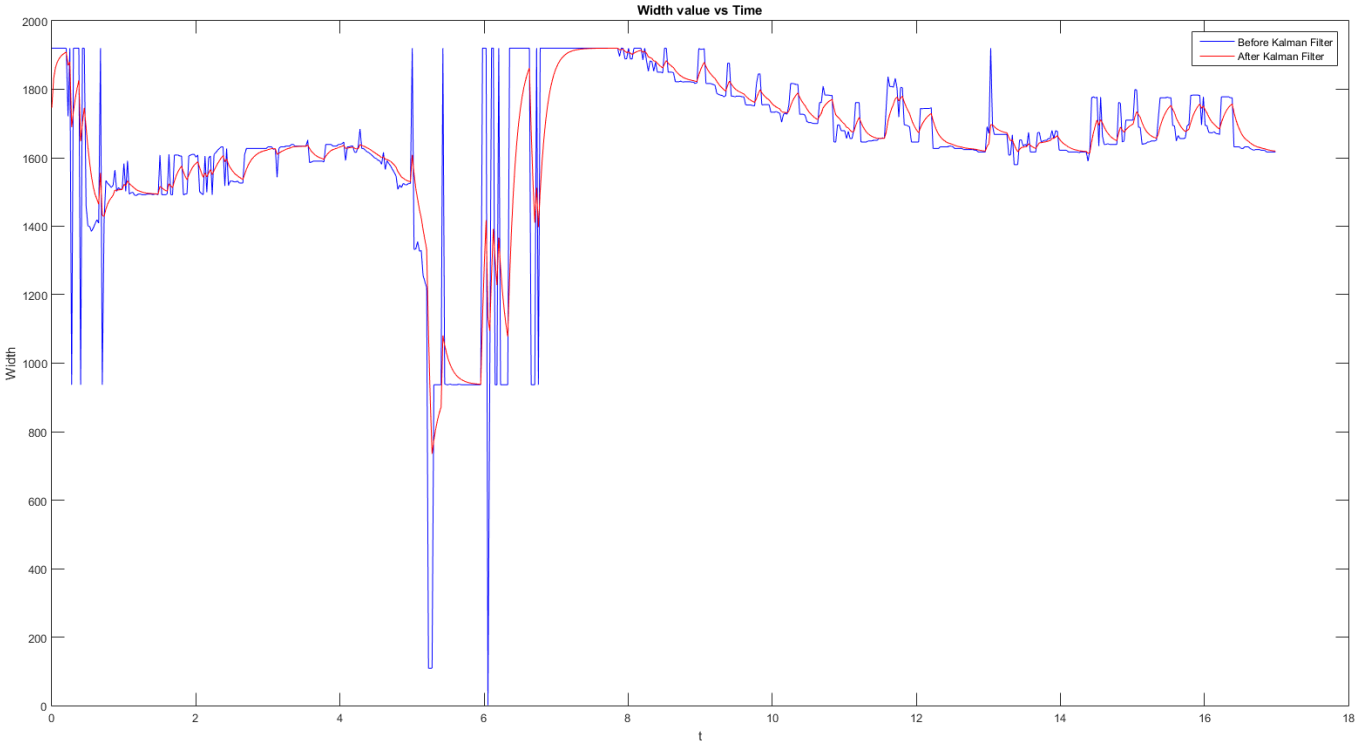

Height Values

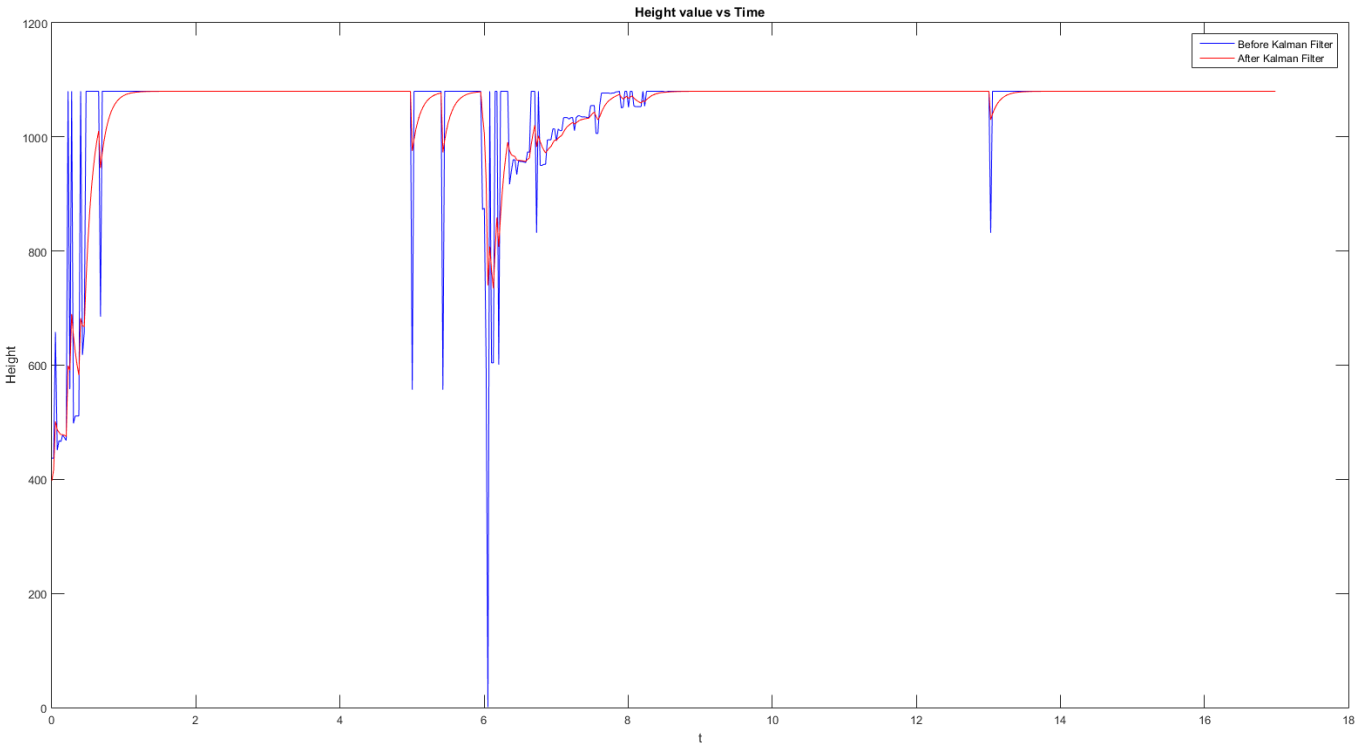

How the Hough Transform Works

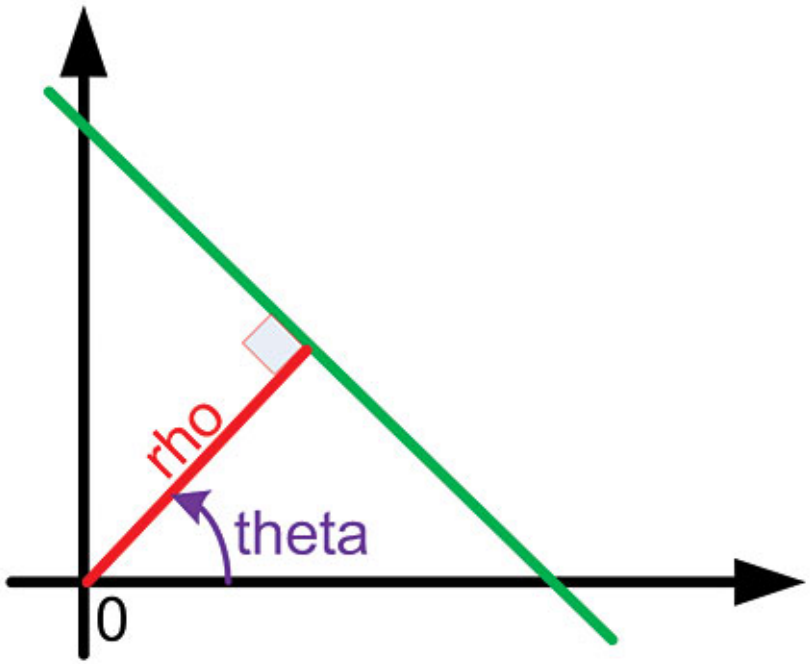

Figure: http://www.qualitymag.com/ext/resources/Issues/November2014/Testing/QM1114-FT2-test-p3SL.jpg

- The Hough Transform converts all cartesian coordinate pixels and maps them onto a $[\rho\ \theta]$ format
- $\rho = xcos(\theta) + ysin(\theta)$

Sample Output of Hough Line [x, y, width, height]

Before Kalman Filter Value:

$$[619, 1, 1492, 1080]$$

After Kalman Filter Value:

$$[616.7, 1.278, 1494, 1080]$$

General Simulink Overview

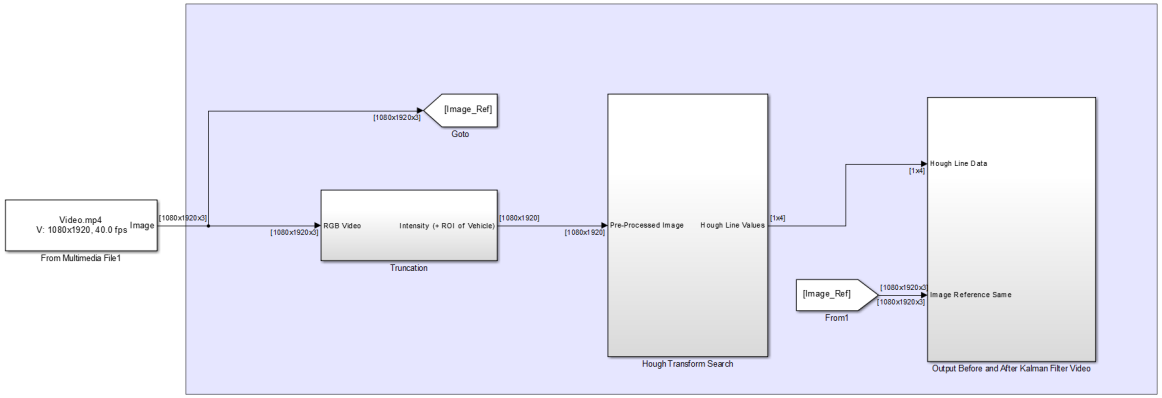

The Simulink block shown above encompasses the Video Process into 3 distinct sections. The first section deals with the preprocessing of the video image and tries to extrapolate only useful pixel information from each individual video frame. The second section utilizes the Hough Transform, Hough Line, and local maxima blocks in order to locate the line of most significance. Finally the last section block compares the Hough Line data through a Kalman Filter and is overlaid with the original Hough Line Transform into the video output.

Preprocessed Simulink Video Image

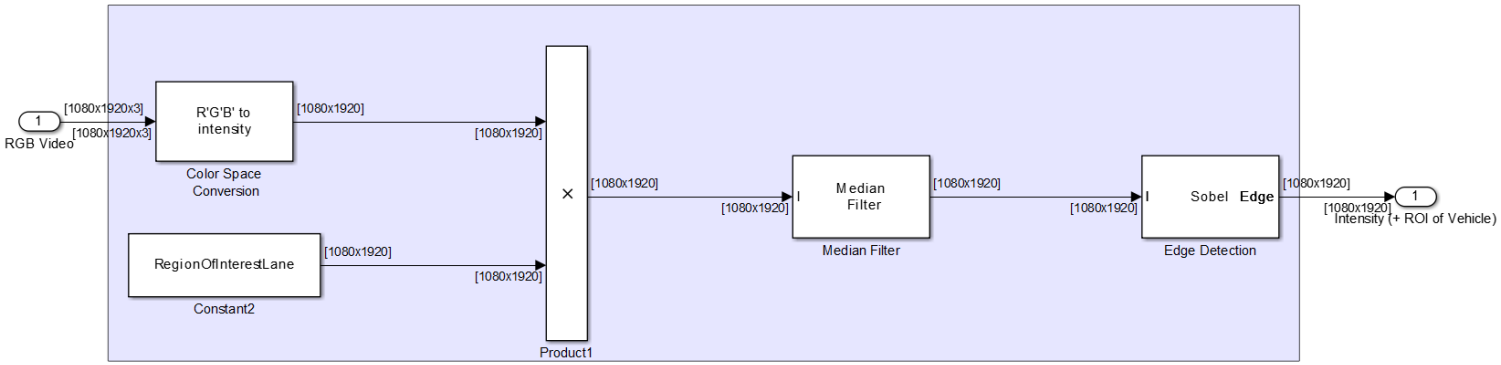

This sub block converts the multidimensional RGB video into a grayscale image as well as truncating the vehicle hood of my Subaru Impreza car. After some tuning roipoly's, the image is narrowed down to the specific lanes of interest. From there, a Hough Transformation is applied for Hough Lines. The Hough Lines will be kept in a short-term repository where it will be filtered through a Kalman Filter for estimation of vehicle lanes.

Hough Transformation and Hough Line Simulink

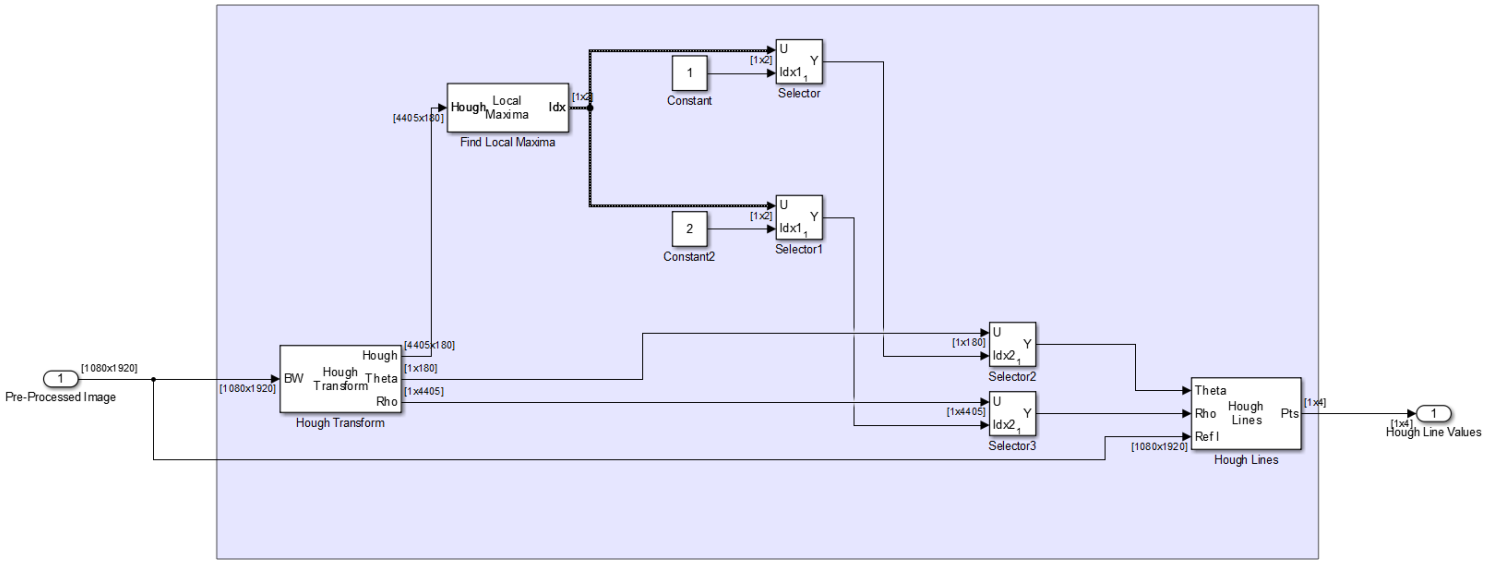

This sub block deals with the Hough Transformation and correctly prepares the data points into a Hough Line block to be later processed into the Kalman Filter Section.

Kalman Filter Hough Line Data & Output Video

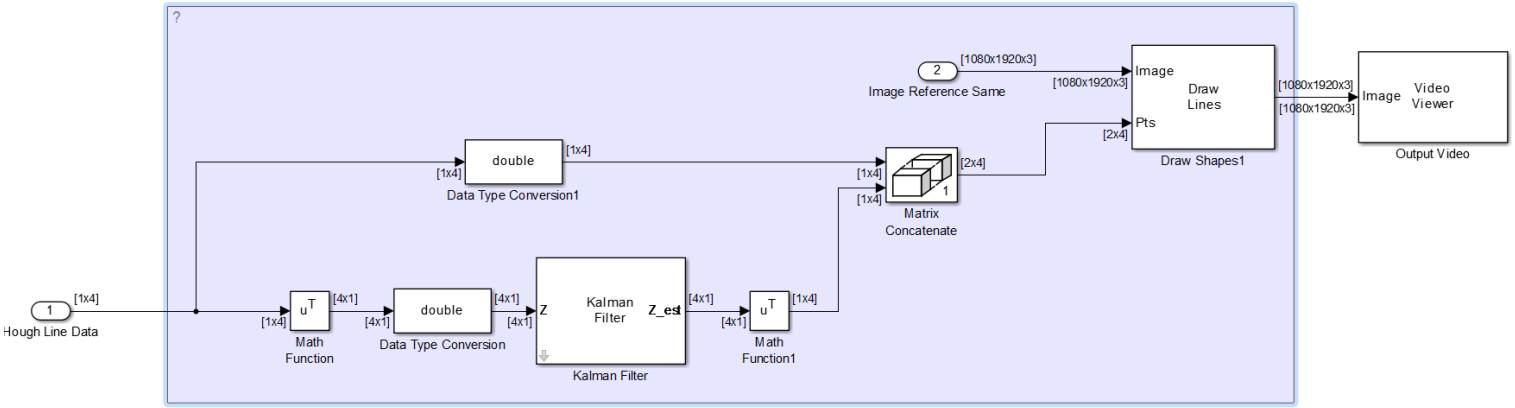

This final sub block utilizes the Kalman Filter estimator block and atttempts to correctly predict where the Hough Lines will go from frame to frame. The lines overlay the original video to observe how it performs when in search of driving lanes.

Kalman Filter Equations

Predicted State:

$$\hat{x}(k+1|k) = F(k)\hat{x}(k|k) + G(k)u(k) \tag{1}$$

State Prediction Covariance:

$$P(k+1|k) = F(k)P(k|k)F(k)' + Q(k) \tag{2}$$

Predicted Measurement:

$$\hat{z}(k+1|k) = H(k+1)\hat{x}(k+1|k) \tag{3}$$

Kalman Filter Equations Continued

Measurement Prediction Covariance:

$$S(k+1) = H(k+1)P(k+1|k)H(k+1)' + R(k+1) \quad (4)$$

Filter Gain:

$$W(k+1) = P(k+1|k)H(l+1)'S(k+1)^{-1} \quad (5)$$

Updated Covariance:

$$P(k+1|k+1) = P(k+1|k) - W(k+1)S(k+1)W(k+1)' \quad (6)$$

Attachments

- Simulink Solution
- Hough Line Data
- Kalman Filter Data
- Plotted Graph Script

References

- Y. Bar-Shalom, X. R. Li, T. Kirubarajan, "Estimation with Applications to Tracking and Navigation, Theory Algorithms and Software", John Wiley 2001, ISBN 978-0471416555
- W. Li, X Gong, et al, "A Lane Marking Detection and Tracking Algorithm Based on Sub-Regions", 2014 International Conference on Informative and Cybernetics for Computational Social Systems (ICCSS).
- A. Borkar, M. Hayes, M. Smith "Robust Lane Detection and Tracking with RANSAC and Kalman Filter", Center for Signal and Image Processing (CSIP), Georgia Institute of Technology, Atlanta, GA.

References Continued

- M. Meuter, S. Muller-Schneiders, et al, "A Novel Approach to Lane Detection and Tracking" Proceedings of the 12th International IEEE Conference on Intelligent Transportation Systems, St. Louis, MO, USA, Oct 3-7, 2009
- U. Meis, W. Klein, C. Wiedemann, "A New Method for Robust Far-distance Road Course Estimation in Advanced Driver Assistance Systems", 2010 13th International IEEE, Annual Conference on Intelligent Transportation Systems, Madeira Island, Portugal, Sept 19-22, 2010