HARDWARE HACKATHON

ROUND 1

-TITLE OF THE PROJECT-

TEAM ID: QXHH-36

TEAM NAME: CIRCUIT BREAKERS

NOTE: PPT to be named as- “teamID_teamname”

PROBLEM UNDERSTANDING & PROPOSED IDEA

In many hospitals, communication between patient rooms and the pharmacy is usually manual adopted system which is slow. This delay affects medicine delivery timings, especially during emergencies.

Proposed Solution: We propose a low-cost autonomous robot that follows a fixed path, detects requests from each room, and communicates them to the pharma station

Uniqueness:
- Low-cost and easy to implement
- Fully automated system
- Reduces human effort and delay
- Can be upgraded with AI in future

SYSTEM ARCHITECTURE/ WORKING

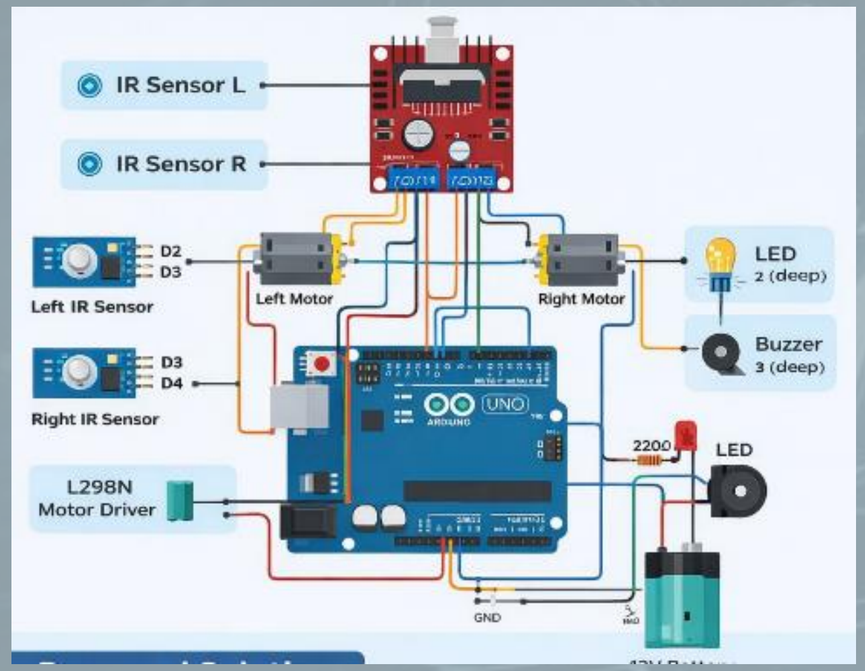

Step-by-Step Working:

1.Robot follows a predefined path using IR sensors

2. Stops at each room
3. Detects request (button/sensor)
4. Stores and counts requests
5. Moves to next room
6. Reaches pharmacy
7. Displays output using LED and buzzer

CIRCUIT DIAGRAM

- 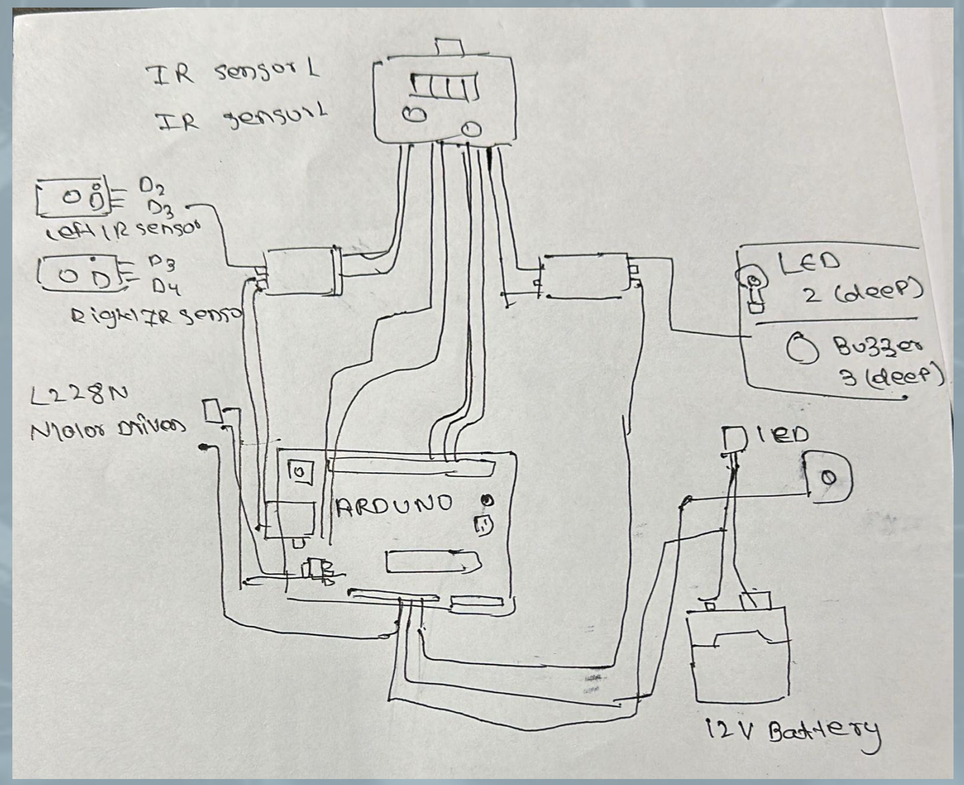

INNOVATION, FEASIBILITY & OUTPUT

- Innovation:
- Smart hospital automation system
- Real-time request detection
- Can be extended with AI, IoT, voice control

- Feasibility:
- Uses low-cost components
- Easy to build and deploy
- Works without internet

- Expected Output:
- Robot moves autonomously
- Detects requests accurately
- LED blinks = number of requests
- Buzzzer beeps = number of rooms