HISTORY OF THE DOCUMENT

Edition	Date	Nature of the modification	Author	Approved by
1.0	22.03.2026	Diagnostic Manual	Saurabh Mani	Saurabh Mani

Table of Contents

FAULT CODE & FAULT NAME 5
GROUP BASED FAULT 14
1.05L (3 CYLINDER) SYSTEM SPECIFICATION 19
FAULT DESCRIPTION: 22
AMF SENSOR SIGNAL FAULT 22
AMF FAULT:-.....23
COOLANT TEMPERATURE SIGNAL FAULTS:- 24
COOLANT TEMPERATURE SIGNAL FAULT:- 25
RAIL PRESSURE SIGNAL FAULT:- 26
RAIL PRESSURE BUILD FAULT 28
OVER PRESSURE FAULT:- 29
RAIL PRESSURE CTRL ERROR FAULT:- 30
FAN 1 FAULT.....32
FAN 2 FAULT.....34
ECU - SUPPLY RELAY STRUCK 36
DROPOUT CU RELAY FAULT 37
EGR VALVE DRIVE DUTY FAULT 38
EGR CONTROL ERROR FAULT:- 39
INJECTOR COMBUSTION - TOO LOW.....40
INJECTOR- OPEN CIRCUIT.....41
INJECTOR – SHORT CIRCUIT 42
IMV-INLET METERING VALVE.....43
CAM SIGNAL FAULT 45
CRANKSHAFT SIGNAL FAULT 46
INJECTOR-HARNESS RESISTANCE FAULT.....47
SENSOR 5 V SUPPLY FAULT(Vext 1) 49
SENSOR 5 V SUPPLY FAULT(Vext 2) 50
BATTERY VOLTAGE SIGNAL FAULT 51
WATER IN FUEL FAULT.....52
WATER IN FUEL SENSOR FAULT 53
INJECTOR DRIVE FAULT.....54
ATMOSPHERIC PRESSURE FAULT 55

ATMOSPHERIC PRESSURE SENSOR FAULT 56
PEDAL TRACK FAULT 57
PEDAL CORRELATION FAULT 58
PEDAL LIMPH FAULT 59
PEDAL REDUCTION FAULT 60
PEDAL STUCK FAULT 61
CLUTCH SWITCH FAULT 62
MDP MIN ABSOLUTE FAULT 63
MDP NO UPDATE ZONE FAULT 64
ECU SAFETY MONITORING FAULTS 65
IMV CURRENT CONTROL FAULT:- 66
INJECTOR CORRECTION 67
INLET AIR TEMPERATURE FAULT : - 68
NON VOLATILE MEMORY FAULTS 69
ECU MEMORY INTEGRITY FAULT 70
AIR CONDITIONER DRIVE FAULT 71
IM CTRL TRIM FAULT 72
ECO SWITCH STUCK FAULT 73
DIAGONSTIC PROCEDURE FOR MDP NO UPDATE FAULTS: 74
NON DETECTABLE FAULTS BY ECU 75
Engine knocking 75
Black Smoke 75
Blue and White smoke 75
Engine Does not Start 76
Engine Does not stop 76
Engine Overheating 77
Unsteady Idle 77
Lack of Power 78
High Fuel Consumption 78
Difficulty Start when Warm 79

COMMON TERMS USED:

HP	High Pressure
LP	Low Pressure
IMV	Inlet Metering Valve
RPS	Rail Pressure sensor
UCL	Upper Cooling
MDP	Minimum Drive Pulse

FAULT CODE & FAULT NAME

S.No	FAULT CODE	LAMP STATUS	FAULT NAME	I_COMET DESCRIPTION
1	P0002	CE	IMV Current Control Fault	Fault arises when the resistance trim values is not between the calibrated threshold value
2	P0003	CE	IMV Current Control Fault	Fault arises when the feedback is not within the calibrated threshold value
3	P0004	CE	IMV Current Control Fault	Fault arises when the feedback is not within the calibrated threshold value
4	P0087	CE	Rail Pressure Build Fault	Rail pressure does not build within the stipulated time.
5	P0088	CE	Over Pressure Fault	Rail pressure exceeds the Calibrated pressure limit in absence of fault in pressure Measurement.
6	P0101	CE&MIL	AMF Plausibility Fault	AMF Sensor Global fault
7	P0102	CE&MIL	AMF Sensor Signal Fault	signal low
8	P0103	CE&MIL	AMF Sensor Signal Fault	signal High
9	P0104	CE&MIL	AMF Fault	AMF Gradient fault
10	P0112	MIL	Inlet air temperature Fault	Inlet air temperature signal falls below a calibrated value
11	P0113	MIL	Inlet air temperature Fault	Inlet air temperature signal falls above a calibrated value
12	P0115	CE&MIL	Coolant temperature Signal Fault	General Fault- occurs when any of the coolant temp faults arises.
13	P0116	CE&MIL	Coolant temperature Signal Fault	Coolant temperature Signal-Plausibility.
14	P0117	CE&MIL	Coolant temperature Signal Fault	Coolant temp falls below the calibrated min value.
15	P0118	CE&MIL	Coolant temperature Signal Fault	Coolant temp exceeds the calibrated max value.
16	P0119	CE&MIL	Coolant temperature Signal Fault	Coolant temp exceeds the max coolant temp Gradient value.
17	P0120	CE	Pedal Limph Fault	Pedal sensor fault (triggers limp home mode)
18	P0122	CE	Pedal Track Fault	Pedal sensor fault (electrical,track1)

19	P0123	CE	Pedal Track Fault	Pedal sensor fault (electrical,track1)
20	P0182	NO LAMP	Fuel Temperature Fault	Fuel temperature sensor low fault
21	P0183	NO LAMP	Fuel Temperature Fault	Fuel temperature sensor high fault
22	P0191	CE	Rail Pressure Calibration Fault	Rail pressure signal-sensor drift.
23	P0192	CE&MIL	Rail Pressure Signal Fault	Rail Pressure falls below the calibrated min value.

S.No	FAULT CODE	LAMP STATUS	FAULT NAME	I_COMET DESCRIPTION
24	P0193	CE&MIL	Rail Pressure Signal Fault	Rail Pressure exceeds the calibrated max value.
25	P0194	CE&MIL	Rail Pressure Signal Fault	Rail Pressure sensor - pressure drop.
26	P0201	CE&MIL	Cylinder 1 Injector Open Circuit	Cylinder 1 Injector Open Circuit.
27	P0202	CE&MIL	Cylinder 2 Injector Open Circuit	Cylinder 2 Injector Open Circuit.
28	P0203	CE&MIL	Cylinder 3 Injector Open Circuit	Cylinder 3 Injector Open Circuit.
30	P0222	CE	Pedal Track Fault	Pedal sensor fault (electrical,track2)
31	P0223	CE	Pedal Track Fault	Pedal sensor fault (electrical,track2)
36	P024B	CE	EGR Control Error Fault	EGR Valve stuck
37	P0251	CE&MIL	IMV – Fault	IMV drive Fault-Short Circuit to Positive.
38	P0253	CE	IMV – Fault	IMV drive Fault-Short Circuit to Ground.
39	P0255	CE&MIL	IMV – Fault	IMV Drive Fault- Open circuit.
40	P0263	CE	Cylinder 1 Injector Combustion too low	Combustion Imbalance in Cylinder 1
41	P0266	CE	Cylinder 2 Injector Combustion too low	Combustion Imbalance in Cylinder 2
42	P0269	CE	Cylinder 3 Injector Combustion too low	Combustion Imbalance in Cylinder 3
44	P029C	CE	MDP No update Fault – Cylinder 1 Injector	This fault is raised when insufficient updates are performed on 1st Cylinder injector regarding firing order.
45	P02A0	CE	MDP No update Fault – Cylinder 2 Injector	This fault is raised when insufficient updates are performed on 2nd Cylinder injector regarding firing order.
46	P02A4	CE	MDP No update Fault – Cylinder 3 Injector	This fault is raised when insufficient updates are performed on 3rd Cylinder injector regarding firing order.

S.No	FAULT CODE	LAMP STATUS	FAULT NAME	I_COMET DESCRIPTION
48	P0335	CE	Crank Shaft Signal Fault	Crank Wheel has stalled (Or) Crank Signal is lost.
49	P0336	CE	Crank Shaft Signal Fault	Crank Signal fault- No gap detected.
50	P0340	CE	Cam Signal Fault	Cam wheel has Stalled (or) Cam Signal Lost.
51	P0341	CE	Cam Signal Fault	Cam Signal has been detected but not Synchronized with Crank.
52	P0371	CE	Crank Shaft Signal Fault	Crank Shaft event is too close to the previous one.
53	P0372	CE	Crank Shaft Signal Fault	Shifted/Missing cam edge
54	P0400	NO LAMP	EGR Control Error Fault	EGR control error (airflow error too high/too low)
55	P0489	MIL	EGR Valve Drive Duty Fault	Electrical fault - Short to Ground / Open Circuit
56	P0490	MIL	EGR Valve Drive Duty Fault	Electrical fault - Short to V bat
57	P0500	CE&MIL	Vehicle Speed Fault	Vehicle speed fault(global)
58	P0501	CE&MIL	Vehicle Speed Consistency Fault	Vehicle speed sensor output not consistent (erratic)
59	P0503	CE&MIL	Vehicle Speed Overrun Fault	Vehicle speed sensor fault (speed too high)
60	P0562	CE&MIL	Battery Voltage Signal Fault	Battery Voltage falls below 6 volts.
61	P0563	CE&MIL	Battery Voltage Signal Fault	Battery Voltage falls above 18 volts.
62	P0603	CE	ECU Memory Integrity Fault	Memory failure - in the coding region of the ECU.
63	P0604	CE	ECU Memory Integrity Fault	Memory failure - in the calibration region of the ECU.
64	P0605	CE	ECU Memory Integrity Fault	Memory failure - in the RAM region of the ECU.
65	P0606	NO LAMP	ECU Safety Monitoring Fault	A fault raised on a memory failure
66	P0642	CE&MIL	Sensor 5V supply Fault – Vext 1	Sensor Supply voltage falls below the calibrated value.
67	P0643	CE&MIL	Sensor 5V supply Fault – Vext 1	Sensor Supply voltage exceeds the calibrated value.

68	P0646	NO LAMP	Air condition Drive Fault	Fault in AC Relay connection short circuit to ground
69	P0647	NO LAMP	Air condition Drive Fault	Fault in AC Relay connection short circuit
70	P0652	CE	Sensor 5V supply Fault – Vext 2	Sensor Supply voltage falls below the calibrated value.

S.No	FAULT CODE	LAMP STATUS	FAULT NAME	I_COMET DESCRIPTION
71	P0653	CE	Sensor 5V supply Fault – Vext 2	Sensor Supply voltage exceeds the calibrated value.
72	P0685	NO LAMP	ECU Supply Relay Stuck Fault	If the power supply to ECU is continued although the time get elapsed, as specified in SMC_RELAY_STUCK_TIME_APV.
73	P0691	CE	Fan 1 Fault	Electrical fault on Fan 1 drive - Short to Ground
74	P0692	CE	Fan 1 Fault	Electrical fault on Fan 1 drive - Short to V bat
75	P0693	CE	Fan 2 Fault	Electrical fault on Fan 2 drive - Short to Ground
76	P0694	CE	Fan 2 Fault	Electrical fault on Fan 2 drive - Short to V bat
77	P0704	NO LAMP	Clutch Switch Fault	A fault in clutch signal
78	P1101	CE&MIL	AMF Fault	AMF Sensor Global fault
79	P1107	CE&MIL	Atmospheric Pressure Fault	Global Atmospheric pressure fault
80	P1121	CE	Pedal Reduction Fault	Pedal sensor fault (triggers reduced torque mode)
81	P1171	CE	MDP Min absolute Fault – Cylinder 1 Injector	This fault is raised when corrected value is less than the calibrated value for Cylinder 1 injector.
82	P1172	CE	MDP Min absolute Fault – Cylinder 2 Injector	This fault is raised when corrected value is less than the calibrated value for Cylinder 2 injector.
83	P1173	CE	MDP Min absolute Fault – Cylinder 3 Injector	This fault is raised when corrected value is less than the calibrated value for Cylinder 3 injector.
85	P1194	CE	ADC Fault	Analog to Digital convertor fault
86	P1201	CE&MIL	Injector Short Circuit – Cylinder 1	Short circuit HSD to LSD (Cylinder 1)
87	P1202	CE&MIL	Injector Short Circuit – Cylinder 2	Short circuit HSD to LSD (Cylinder 2)
88	P1203	CE&MIL	Injector Short Circuit – Cylinder 3	Short circuit HSD to LSD (Cylinder 3)

S.No	FAULT CODE	LAMP STATUS	FAULT NAME	I_COMET DESCRIPTION
93	P1253	CE	Rail Pressure control error Fault	Rail pressure control error (pressure error too high) – Negative
94	P1254	CE	Rail Pressure control error Fault	Rail pressure control error (pressure error too high) – Positive
95	P1256	CE	IM CTRL Trim Fault	Fuel LO / Trim LO
96	P1257	CE	IM CTRL Trim Fault	Fuel LO / Trim HI
97	P1258	CE	IM CTRL Trim Fault	Fuel HI / Trim LO
98	P1259	CE	IM CTRL Trim Fault	Fuel HI / Trim HI
99	P1286	CE	Injector Harness Resistance Fault – Low (for all the 4 Injectors will have the same code)	Measured resistance value equal to or less than the calibrated threshold Value – INJECTOR/Cylinder 1/2/3/4
100	P1287	CE	Injector Harness Resistance Fault – Hi (for all the 4 Injectors will have the same code)	Measured resistance value equal to or greater than the calibrated threshold value - INJECTOR / Cylinder 1/2/3/4
101	P1606	CE	Non Volatile Memory Fault	Nonvolatile memory fault - ATC, PL, CC, PL CDS
102	P1614	CE	Non Volatile Memory Fault	Fault arises when there is a problem in storing data in ECU memory - I3C & MDP
103	P1615	CE	Non Volatile Memory Fault	Fault arises when there is a problem in storing data in ECU memory - RPC, PL, STE
104	P1616	CE	Non Volatile Memory Fault	Fault arises when there is a problem in storing data in Non volatile memory.
105	P1617	CE	Non Volatile Memory Fault	Fault arises when there is a problem in storing data in ECU memory - SMC
106	P1620	CE	Non Volatile Memory Fault	Fault arises when there is a problem in storing data in ECU memory – ICV ,INJ, CNT
107	P1621	CE	Non Volatile Memory Fault	Fault arises when there is a problem in storing data in ECU memory - FM
108	P1622	CE	Non Volatile Memory Fault	Fault arises when there is a problem in storing data in ECU

				memory - APP
109	P1646	NO LAMP	Air Condition Drive Fault	AC Relay connection open circuit

S.No	FAULT CODE	LAMP STATUS	FAULT NAME	I_COMET DESCRIPTION
116	P1685	NO LAMP	Drop out CU Relay Fault	Supply Relay Open Circuit-unexpected.
117	P1691	CE	Fan 1 Fault	Electrical fault on Fan 1 drive - Open circuit
118	P1693	CE	Fan 2 Fault	Electrical fault on Fan 2 drive - Open circuit
119	P16F3	NO LAMP	ECU Safety Monitoring Fault	Fault to indicate an error on the sequence number transmitted by monitoring modulator or time between two queries has been expired.
120	P2135	CE	Pedal Correlation fault	Pedal sensor fault (correlation between tracks 1 and 2)
121	P2147	CE&MIL	Injector Drive Fault	Injector bank 1 fault - shorted to GND.
122	P2148	CE&MIL	Injector Drive Fault	Injector bank 1 fault - shorted to V BATT
123	P2264	CE	Water in fuel sensor Fault	Fault due to open circuit or V BAT
124	P2266	CE	Water in fuel sensor Fault	Fault due to Short circuit
125	P2269	WIF LAMP	Water in fuel Fault	Water in fuel detected.
126	P2299	CE	Pedal Struck Fault	Accelerator pedal is stuck in a position above zero
127	P268C	CE	Injector correction fault – C2I – Cylinder 1	Incorrect or No I2C / I3C written on 1st Cylinder
128	P268D	CE	Injector correction fault – C2I – Cylinder 2	Incorrect or No I2C / I3C written on 2nd Cylinder
129	P268E	CE	Injector correction fault – C2I – Cylinder 3	Incorrect or No I2C / I3C written on 3rd Cylinder

GROUP BASED FAULT

FAULT GROUP	FAULT CODE	FAULT NAME
AC_OFF_GROUP_FAULT	P1646,P0646,P0647	Air Condition Drive Fault
	P0562,P0563	Battery Voltage Signal Fault
	P0115	Coolant temperature Signal Fault
	P0691,P0692,P1691	Fan 1 Fault
	P0693,P0694,P1693	Fan 2 Fault
DELAY_ENG_STOP_GROUP_FAULT	P0251,P0253,P0255	IMV Fault
	P0192,P0193,P0194	Rail Pressure Signal Fault
	P0191	Rail Pressure Calibration Fault
	P0642,P0643	Sensor 5V Supply Fault – Vext 1
STOP_ENGINE_GROUP_FAULT	P0603,P0604,P0605	ECU Memory Integrity Fault
	P0088	Over Pressure Fault
LIMP_HOME_GROUP_FAULT	P0120	Pedal Limph Fault
	P2299	Pedal Struck Fault
	P0192,P0193,P0194	Rail Pressure Signal Fault
	P0642,P0643	Sensor 5V Supply Fault – Vext 1
REDUCED_TRQ_GROUP_FAULT	P0201	Cylinder 1 Injector Open Circuit
	P0203	Cylinder 3 Injector Open Circuit
	P0202	Cylinder 2 Injector Open Circuit
	P1201	Cylinder 1 Injector Short Circuit
	P1203	Cylinder 3 Injector Short Circuit
	P1202	Cylinder 2 Injector Short Circuit
	P1256,P1257,P1258,P1259	IM CTRL Trim Fault
	P1121	Pedal Reduction Fault
	P1253,P1254	Rail Pressure CTRL Error Fault
	P2264,P2266	Water in Fuel Sensor Fault
	P0562,P0563	Battery Voltage Signal Fault
	P0117,P0118,P0119	Coolant Temperature Signal Fault
	P0115	Coolant temperature Signal Fault
	P0251,P0253,P0255	IMV Fault
	P0192,P0193,P0194	Rail Pressure Signal Fault
	P0191	Rail Pressure Calibration Fault
	P0642,P0643	Sensor 5V Supply Fault – Vext 1
	P1107	Atmospheric Pressure Fault
	P1171	MDP Min Absolute Fault Cylinder 1
	P1173	MDP Min Absolute Fault Cylinder 3
	P1172	MDP Min Absolute Fault Cylinder 2
	P029C	MDP No Update Fault Cylinder 1

	P02A4	MDP No Update Fault Cylinder 3
	P02A0	MDP No Update Fault Cylinder 2

FAULT GROUP	FAULT CODE	FAULT NAME
MI_LAMP_GROUP_FAULT	P1101	AMF Fault
	P0104	AMF Fault
	P0101	AMF Plausibility Fault
	P0102,P0103	AMF Sensor Signal Fault
	P1107	Atmospheric Pressure Fault
	P0107,P0108,P0109	Atmospheric Pressure Sensor Fault
	P0562,P0563	Battery Voltage Signal Fault
	P0237,P0238,P1236	Boost Pressure Signal Fault
	P0116	Coolant Temperature Signal Fault
	P0117,P0118,P0119	Coolant Temperature Signal Fault
	P0115	Coolant Temperature Signal Fault
	P0489,P0490	EGR Valve Drive Duty Fault
	P2147	Injector Drive Fault
	P2148	Injector Drive Fault
	P0201	Cylinder 1 Injector Open Circuit
	P0203	Cylinder 3 Injector Open Circuit
	P0202	Cylinder 2 Injector Open Circuit
	P1201	Cylinder 1 Injector Short Circuit
	P1203	Cylinder 3 Injector Short Circuit
	P1202	Cylinder 2 Injector Short Circuit
	P0251,P0253,P0255	IMV Fault
	P0112,P0113	Inlet Air Temperature Fault
	P0192,P0193,P0194	Rail Pressure Signal Fault
	P0500	Vehicle Speed Fault
	P0642,P0643	Sensor 5V Supply Fault – Vext 1
CE_LAMP_GROUP_FAULT	P1194	ADC Fault
	P1101	AMF Fault
	P0340	CAM Signal Fault
	P0341	CAM Signal Fault
	P0371	Crank Shaft Signal Fault
	P0336	Crank Shaft Signal Fault
	P0335	Crank Shaft Signal Fault
	P0372	Crank Shaft Signal Fault
	P1107	Atmospheric Pressure Fault
	P0562,P0563	Battery Voltage Signal Fault
	P1287	Cylinder 1 Injector Harness Resistance Fault Hi
	P1287	Cylinder 2 Injector Harness Resistance Fault Hi

FAULT GROUP	FAULT CODE	FAULT NAME
CE_LAMP_GROUP_FAULT	P1287	Cylinder 3 Injector Harness Resistance Fault Hi
	P1286	Cylinder 1 Injector Harness Resistance Fault Lo
	P1286	Cylinder 2 Injector Harness Resistance Fault Lo
	P1286	Cylinder 3 Injector Harness Resistance Fault Lo
	P268C	Cylinder 1 Injector Correction Fault C2I/C3I
	P268E	Cylinder 3 Injector Correction Fault C2I/C3I
	P268D	Cylinder 2 Injector Correction Fault C2I/C3I
	P0116	Coolant Temperature Signal Fault
	P0117,P0118,P0119	Coolant Temperature Signal Fault
	P0115	Coolant Temperature Signal Fault
	P024B	EGR Control Error Fault
	P0691,P0692,P1691	Fan 1 Fault
	P0693,P0694,P1693	Fan 2 Fault
	P2147	Injector Drive Fault
	P2148	Injector Drive Fault
	P0263	Cylinder 1 Injector Combustion Too Low
	P0269	Cylinder 3 Injector Combustion Too Low
	P0266	Cylinder 2 Injector Combustion Too Low
	P0201	Cylinder 1 Injector Open Circuit
	P0203	Cylinder 3 Injector Open Circuit
	P0202	Cylinder 2 Injector Open Circuit
	P1201	Cylinder 1 Injector Short Circuit
	P1203	Cylinder 3 Injector Short Circuit
	P1202	Cylinder 2 Injector Short Circuit
	P0002	IMV Current control Fault
	P0003,P0004	IMV Current control Fault
	P1256,P1257,P1258,P1259	IM CTRL Trim Fault
	P0251,P0253,P0255	IMV Fault
	P1171	MDP Min Absolute Fault Cylinder 1
	P1173	MDP Min Absolute Fault Cylinder 3

FAULT GROUP	FAULT CODE	FAULT NAME
CE_LAMP_GROUP_FAULT	P1172	MDP Min Absolute Fault Cylinder 2
	P029C	MDP No Update Fault Cylinder 1
	P02A4	MDP No Update Fault Cylinder 3
	P02A0	MDP No Update Fault Cylinder 2
	P0603,P0604,P0605	ECU Memory Integrity Fault
	P0088	Over Pressure Fault
	P2135	Pedal Correlation Fault
	P0120	Pedal Limph Fault
	P1121	Pedal Reduction Fault
	P2299	Pedal Struck Fault
	P0122,P0123	Pedal Track Fault
	P0222,P0223	Pedal Track Fault
	P0192,P0193,P0194	Rail Pressure Signal Fault
	P0191	Rail Pressure Calibration Fault
	P0087	Rail Pressure Build Fault
	P1253,P1254	Rail Pressure CTRL Error Fault
	P0500	Vehicle Speed Fault
	P0642,P0643	Sensor 5V Supply Fault – Vext 1
	P0652,P0653	Sensor 5V Supply Fault – Vext 2
	P2264,P2266	Water In fuel Sensor Fault

ENGINE SPECIFICATIONS	
Engine type	1.05L - 3 cylinder
Engine cubic capacity	1100 cc
Bore diameter	75 mm
Stroke length	79 mm
Compression ratio	16.8: 1
Max power	70 Ps @ 4000 rpm
Max torque	140 Nm @1750-2750 rpm
Max no load speed	4750 rpm
Idle rpm	870 rpm
Emission Norms	BS IV

HIGH PRESSURE PUMP DETAILS:

HIGH PRESSURE PUMP DETAILS	
Base pump design	DFL 6.1
Part number	28320424
Lift pump	In-tank feed pump
Transfer pressure	NA
Maximum pumping capacity	0.385cc/pump rev
Max. & Min. allowable inlet pressure(all conditions)	7/4 Bar
Max. allowable return pressure(all conditions)	1.3 Bar
Max. allowable inlet temperature	80OC and 90 oC for a maximum of 100 hours
Max Return Flow	160L/hr
Drive ratio	1:2
Pump drive type	Oldham

HIGH PRESSURE PIPE DETAILS:

HIGH PRESSURE PIPE DETAILS	
Supplier	Imporium
Pipe OD(pump to rail)	6.3mm
Pipe ID(pump to rail)	3mm
Pipe OD(rail to Injector)	6.3mm
Pipe ID(Rail to injector)	3mm
Pipe nut definition	M!$x1.5
Pipe nut torque specification	28Nm+/-5Nm
Rail to Injector pipe length	200mm

HIGH PRESSURE RAIL DETAILS:

HIGH PRESSURE RAIL DETAILS	
Rail Type	DFT 3.3 PLJ
Part number	28323443AA
H.P.Volume(Pressure Limiting Valve)	12.5 ± 1 cc
External length(with Sensor)	260 mm (Max)
RPS pressure sensing range	0 - 1800 bar
Rail mass (Inc.sensor)	1.15 kg +/- 0.05kg

COMMON RAIL INJECTOR DETAILS:

COMMON RAIL INJECTOR DETAILS	
Injector Type	DII 1.3
Part number	28280576
Clamping method	Finger clamps (Forged)
No. of nozzle injection holes	6
Nozzle type	micro sac
Control valve specification	Robust Pack
Valve-in nozzle flow @ 100bar	0.55 l/min
Axial clamp load specification	7.5kN +/- 3.5kN
Sealing washer thickness	2.5mm
Sealing washer material	Copper
Back leak depression range	-700 to -100mbar
Injector mass	0.260 kg+/- 5%

LOW-PRESSURE SYSTEM DETAILS:

LOW-PRESSURE SYSTEM DETAILS	
Filter part number	28419856
Filter specification	3 Layer- V2 medium
Filter weight	0.465kg
Pre-Filter part number(with WIF)	28419854
Pre-Filter part number(Service Kit)	-
Pre-Filter specification	3 Layer –Coelasent media
Pear pump part number	NA
Pear pump weight	NA

ECU DETAILS:

ECU DETAILS	
ECU Level	DCM
Part number	Production ECU: DKL1296953 Development ECU: DKL296951
Software	0XTMLAPP_X10004D01
Software environment	0XTMLAPP_X10004D01.a2l

FAULT DESCRIPTION:

AMF SENSOR SIGNAL FAULT

CODE	FAULT NAME	DIAGNOSTIC TOOL DESCRIPTION
P0102	AMF sensor fault	signal low
P0103	AMF sensor fault	signal High

S No	ENVIRONMENT	UNITS
1	ACM_EGR_VALVE_DRIVE_DUTY_CYCLE	%
2	IN_BATTERY_VOLTAGE	Volt
3	P_L_COOLANT_TEMPERATURE	deg
4	IN_ENGINE_CYCLE_SPEED	rpm
5	IN_INLET_AIR_TEMPERATURE	deg
6	ICV_VEHICLE_SPEED	km/h
7	T_D_INDICATED_TORQUE	Nm
8	P_L_VEXT1_RAW	Volt

RECOVERY MODE	
1	Turn off EGR
2	Turns on MIL lamp

TO CHECK	TO RECTIFY
1.Sensor Connection	1.Remove and connect again.
2.Electrical wiring.	2.Terminal backout, wire open circuit & short circuit.
3.ECU connection.	3.Connect properly.
4.AMF sensor malfunctioning .	4.Change sensor.

ECU CONNECTIONS

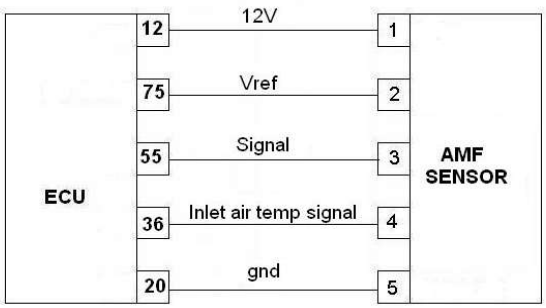

AMF FAULT:-

CODE	FAULT NAME	DIAGNOSTIC TOOL DESCRIPTION
P1101	AMF Sensor fault	AMF Sensor Global fault
P0104	AMF Gradability fault	AMF Gradient fault

S No	ENVIRONMENT	UNITS
1	IN_AMF_FEEDBACK	mg/str
2	IN_BATTERY_VOLTAGE	Volt
3	IN_BOOST_PRESSURE	bar
4	P_L_COOLANT_TEMPERATURE	deg C
5	IN_ENGINE_CYCLE_SPEED	rpm
6	IN_INLET_AIR_TEMPERATURE	deg C
7	ICV_VEHICLE_SPEED	km/hr
8	T_D_INDICATED_TORQUE	Nm

RECOVERY MODE	
1	Turns Check engine Lamp ON
2	Turns MIL lamp ON
3	Disable EGR control (airflow)

TO CHECK	TO RECTIFY
1.Sensor connection	1.Remove and connect again.
2.Electrical wiring.	2.Terminal backout, wire open circuit & short circuit.
3.ECU connection.	3.Connect properly.

ECU CONNECTIONS

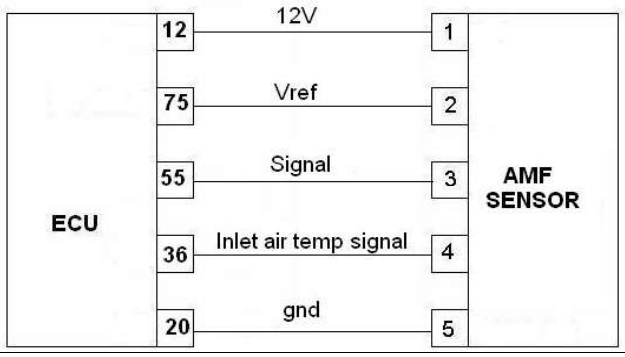

COOLANT TEMPERATURE SIGNAL FAULTS:-

The coolant sensor global fault P0115 will raise on the occurrence of following faults

CODE	FAULT NAME	DIAGNOSTIC TOOL DESCRIPTION
P0117	Coolant Temp. sensor electrical fault - short to low	Coolant temp. falls below the calibrated min value.
P0118	Coolant Temp. sensor electrical fault - short to high	Coolant temp. exceeds the calibrated max value.
P0119	Coolant Temp. Sensor -Gradient Fault.	Coolant temp. Exceeds the max coolant temp.Gradient value.

S No	ENVIRONMENT	UNITS
1	IN_BATTERY_VOLTAGE	volt
2	P_L_COOLANT_TEMPERATURE	deg C
3	IN_ENGINE_CYCLE_SPEED	rpm
4	IN_INLET_AIR_TEMPERATURE	deg C
5	ICV_VEHICLE_SPEED	km/hr
6	SMC_ENGINE_STATE	SMC_STOPPED,SMC_CRANKING, SMC_RUNNING,SMC_STALLING.
7	T_D_INDICATED_TORQUE	Nm
8		

RECOVERY MODE	
1	Turns on check Engine lamp
2	Turns MI Lamp ON
3	Torque reduction
4	Disables EGR
5	Turns Fan ON
6	Turns AC Off
7	Disable SPC strategy

ECU CONNECTIONS

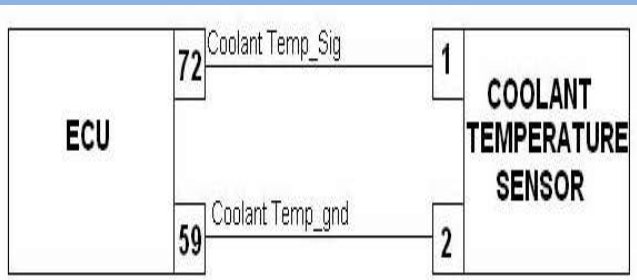

COOLANT TEMPERATURE SIGNAL FAULT:-

CODE	FAULT NAME	DIAGNOSTIC TOOL DESCRIPTION
P0115	Coolant temperature signal-Generic.	General Fault- occurs when any of the above fault arises.
P0116	Coolant temperature sensor fault - electrical or plausibility	coolant temperature Signal-Plausibility.

S No	ENVIRONMENT	UNITS
1	IN_BATTERY_VOLTAGE	volt
2	P_L_COOLANT_TEMPERATURE	deg C
3	IN_ENGINE_CYCLE_SPEED	rpm
4	IN_INLET_AIR_TEMPERATURE	deg C
5	ICV_VEHICLE_SPEED	km/hr
6	SMC_ENGINE_STATE	SMC_STOPPED,SMC_CRANKING, SMC_RUNNING,SMC_STALLING.
7	T_D_INDICATED_TORQUE	Nm
8		

RECOVERY MODE	
1	Turns on check Engine lamp
2	Turns MI Lamp ON
3	Torque reduction
4	Disables EGR
5	Turns Fan ON
6	Turns AC Off
7	Disable SPC strategy

TO CHECK	TO RECTIFY
1.Coolant sensor connection	1.Remove and connect again
2.Electrical wiring	2.Terminal blackout, wire open circuit & short circuit
3.ECU connection	3.Connect properly
4.Coolant Sensor malfunctioning	4.Change sensor

ECU CONNECTIONS

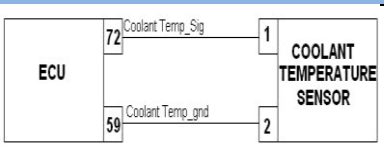

RAIL PRESSURE SIGNAL FAULT:-

CODE	FAULT NAME	DIAGNOSTIC TOOL DESCRIPTION
P0192	Rail Pressure Sensor fault - signal low.	Rail Pressure falls below the calibrated min value.
P0193	Rail Pressure Sensor fault - signal high.	Rail Pressure exceeds the calibrated max value.
P0194	Rail Pressure Sensor fault - signal drop	Rail Pressure sensor - pressure drop.

S No	ENVIRONMENT	UNITS
1	IN_BATTERY_VOLTAGE	volt
2	P_L_COOLANT_TEMPERATURE	deg C
3	IN_ENGINE_CYCLE_SPEED	rpm
4	IN_RAIL_PRESSURE_FEEDBACK	bar
5	ICV_VEHICLE_SPEED	Km/hr
6	T_D_INDICATED_TORQUE	Nm
7	P_L_VEXT1_RAW	volt
8		

RECOVERY MODE	
1	Turns Check Engine Lamp(CEL) ON.
2	Engine stops after delay
3	Disable pilot and post injections
4	Disables RVD
5	Disable RPC control fault detection
6	Disable cylinder balancing
7	Disables leak detection test
8	Limp home mode activated
9	Activates Forced IM group
10	Activates pressure limiting group
11	Deactivates over rail pressure test
12	Torque reduction
13	Disables rail pressure fault detection
14	Disables Injector balancing
15	Disables EGR
16	Disables SPC
17	Disables RP build measurement

TO CHECK	TO RECTIFY
1.Rail Sensor connection	1.Remove and connect again
2.ECU connection	2.Connect properly
3.Electrical wiring	3.Terminal backout, wire open circuit & short circuit
4.Wiring connector breakage	4.Change connector
5.Rail Pressure Sensor malfunctioing	5.Change Rail + Sensor

ECU CONNECTIONS

RAIL PRESSURE BUILD FAULT

CODE	FAULT NAME	DIAGNOSTIC TOOL DESCRIPTION
P0087	Rail Pressure Build Error	Rail pressure does not build within the speculated time.

S No	ENVIRONMENT	UNITS
1	IN_BATTERY_VOLTAGE	volt
2	P_L_COOLANT_TEMPERATURE	deg C
3	IN_ENGINE_CYCLE_SPEED	rpm
4	RPC_IM_CRT_DMND	mA
5	IN_RAIL_PRESSURE_FEEDBACK	bar
6	ICV_VEHICLE_SPEED	Km/hr
7	T_D_INDICATED_TORQUE	Nm

RECOVERY MODE	
1	Turns Check Engine Lamp(CEL) ON.
2	Disables RVD
3	Disables EGR
4	Disables Cylinder balancing

TO CHECK	TO RECTIFY
1. IMV fault present	1.Refer fault tree P 0251, 0253 & 0255.
2. HP sensor fault present	2.Refer fault tree P 0192, 0193, 0194 & 1190.
3. LP Circuit Problem	3. Low pressure checks:
A.Fuel level in diesel tank (check physically)	A. Fill if it is empty
B.Air in the circuit	B. Remove air entrapment(Do not loosen HP pipes)
C.Filter connection and LP fuel lines	C. Connect properly.
D.Strainer in Fuel tank	D. Strainer checks:
	i. Remove & replace strainer if choked, Tighten strainer & banjo joint properly
	ii. Change if found defective
	iii. Connect properly
4. HP Circuit Problem	4. Perform High Pressure Diagonistics

ECU CONNECTIONS
X

OVER PRESSURE FAULT:-

CODE	FAULT NAME	DIAGNOSTIC TOOL DESCRIPTION
P0088	Rail pressure error - Over pressure	Rail pressure exceeds the Calibrated pressure limit in absence of fault in pressure measurement.

S No	ENVIRONMENT	UNITS
1	IN_BATTERY_VOLTAGE	volt
2	P_L_COOLANT_TEMPERATURE	deg C
3	IN_ENGINE_CYCLE_SPEED	rpm
4	RPC_IM_CRT_DMND	mA
5	IN_RAIL_PRESSURE_FEEDBACK	bar
6	ICV_VEHICLE_SPEED	Km/hr
7	T_D_INDICATED_TORQUE	Nm

RECOVERY MODE	
1	Turns Check Engine Lamp(CEL) ON.
2	Engine shuts down immediately.

TO CHECK	TO RECTIFY
1.IMV fault present	1.Refer fault tree P 0251, 0253 & 0255.
2.HP sensor fault present	2.Refer fault tree P 0192, 0193, 0194 & 1190.
3.Injector back leak Hose.	3. Check back leak pipe:
	A. Remove and connect it again.
	B .Replace the Back leak hose.
4.Injector block / HP Circuit problem	4.Perform High Pressure Diagonistics

ECU CONNECTIONS
X

RAIL PRESSURE CTRL ERROR FAULT:-

CODE	FAULT NAME	DIAGNOSTIC TOOL DESCRIPTION
P1253	Rail pressure control error (pressure error too high) - Negative	Rail pressure control error (pressure error too high) - Negative
P1254	Rail pressure control error (pressure error too high) - Positive	Rail pressure control error (pressure error too high) - Positive

S No	ENVIRONMENT	UNITS
1	IN_BATTERY_VOLTAGE	volt
2	P_L_COOLANT_TEMPERATURE	deg C
3	IN_ENGINE_CYCLE_SPEED	rpm
4	IN_RAIL_PRESSURE_FEEDBACK	bar
5	ICV_VEHICLE_SPEED	Km/hr
6	T_D_INDICATED_TORQUE	Nm
7	RPC_IM_CRT_DMND	mA
8		

RECOVERY MODE	
1	Turns Check Engine Lamp(CEL) ON.
2	Disables RVD
3	Disables cylinder balancing
4	Disables Injector Balancing
5	Disables SPC
6	Disables EGR
7	Torque reduction

TO CHECK	TO RECTIFY
1. IMV fault present	1.Refer fault tree P 0251, 0253 & 0255.
2. HP sensor fault present	2.Refer fault tree P 0192, 0193, 0194 & 1190.
3. LP Circuit Problem	3. Low pressure checks:
A. Fuel level in diesel tank (check physically)	A. Fill if it is empty
B. Air in the circuit	B. Remove air entrapment(Do not loosen HP pipes)
C. Filter connection and LP fuel lines	C. Connect properly.
D. Strainer in Fuel tank	D. Strainer checks:
	i. Remove & replace strainer if choked, Tighten strainer & banjo joint properly
	ii. Change if found defective
	iii. Connect properly
4.Injector back leak Hose.	4. Check back leak pipe:
	A. Remove and connect it again.
	B .Replace the Back leak hose.
5.Injector block / HP Circuit problem	5.Perform High Pressure Diagonistics

ECU CONNECTIONS
X

FAN 1 FAULT

CODE	FAULT NAME	DIAGNOSTIC TOOL DESCRIPTION
P1691	Fan 1 fault - Electrical drive	Electrical fault on Fan 1 drive - Open circuit
P0692	Fan 1 fault - Electrical drive	Electrical fault on Fan 1 drive - Short to Vbat
P0691	Fan 1 fault - Electrical drive	Electrical fault on Fan 1 drive - Short to Ground

S No	ENVIRONMENT	UNITS
1	IN_BATTERY VOLTAGE	V
2	P_L_COOLANT_TEMPERATURE	deg C
3	IN_ENGINE_CYCLE_SPEED	rpm
4	IN_IGNITION_SWITCH	on/off
5	ICV_VEHICLE_SPEED	km/hr
6	SMC_ENGINE_STATE	SMC_STOPPED,SMC_CRANKING,SMC_RUNNING,SMC_STALLING.
7	T_D_INDICATED_TORQUE	Nm
8	IN_AC_ACTIVE	True / False

RECOVERY MODE	
1	AC Off
2	Activates FAN group
3	Turns Check Engine lamp ON

TO CHECK	TO RECTIFY
1	Check relay connection
2	Check ECU conenction
3	Wiring harness continuity
4	Relay

ECU CONNECTIONS

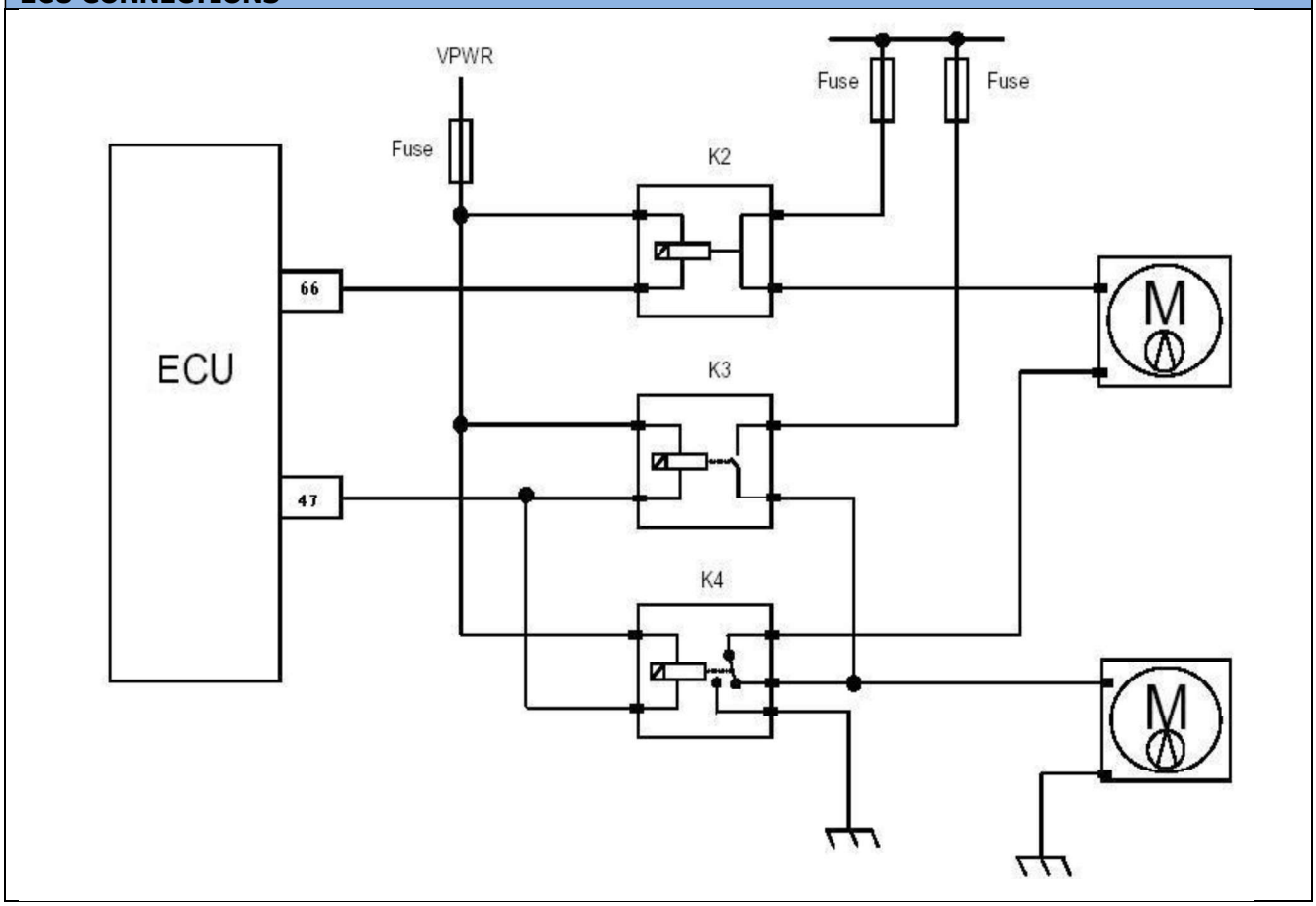

FAN 2 FAULT

CODE	FAULT NAME	DIAGNOSTIC TOOL DESCRIPTION
P1693	Fan 2 fault - Electrical drive	Electrical fault on Fan 2 drive - Open circuit
P0694	Fan 2 fault - Electrical drive	Electrical fault on Fan 2 drive - Short to Vbat
P0693	Fan 2 fault - Electrical drive	Electrical fault on Fan 2 drive - Short to Ground

S No	ENVIRONMENT	UNITS
1	IN_BATTERY VOLTAGE	V
2	P_L_COOLANT_TEMPERATURE	deg C
3	IN_ENGINE_CYCLE_SPEED	rpm
4	IN_IGNITION_SWITCH	on/off
5	ICV_VEHICLE_SPEED	km/hr
6	SMC_ENGINE_STATE	SMC_STOPPED,SMC_CRANKING, SMC_RUNNING,SMC_STALLING.
7	T_D_INDICATED_TORQUE	Nm
8	IN_AC_ACTIVE	True / False

RECOVERY MODE	
1	AC Off
2	Activates FAN group
3	Turns Check Engine lamp ON

TO CHECK	TO RECTIFY
1	Check relay connection
2	Check ECU conenction
3	Wiring harness continuity
4	Relay

ECU CONNECTIONS

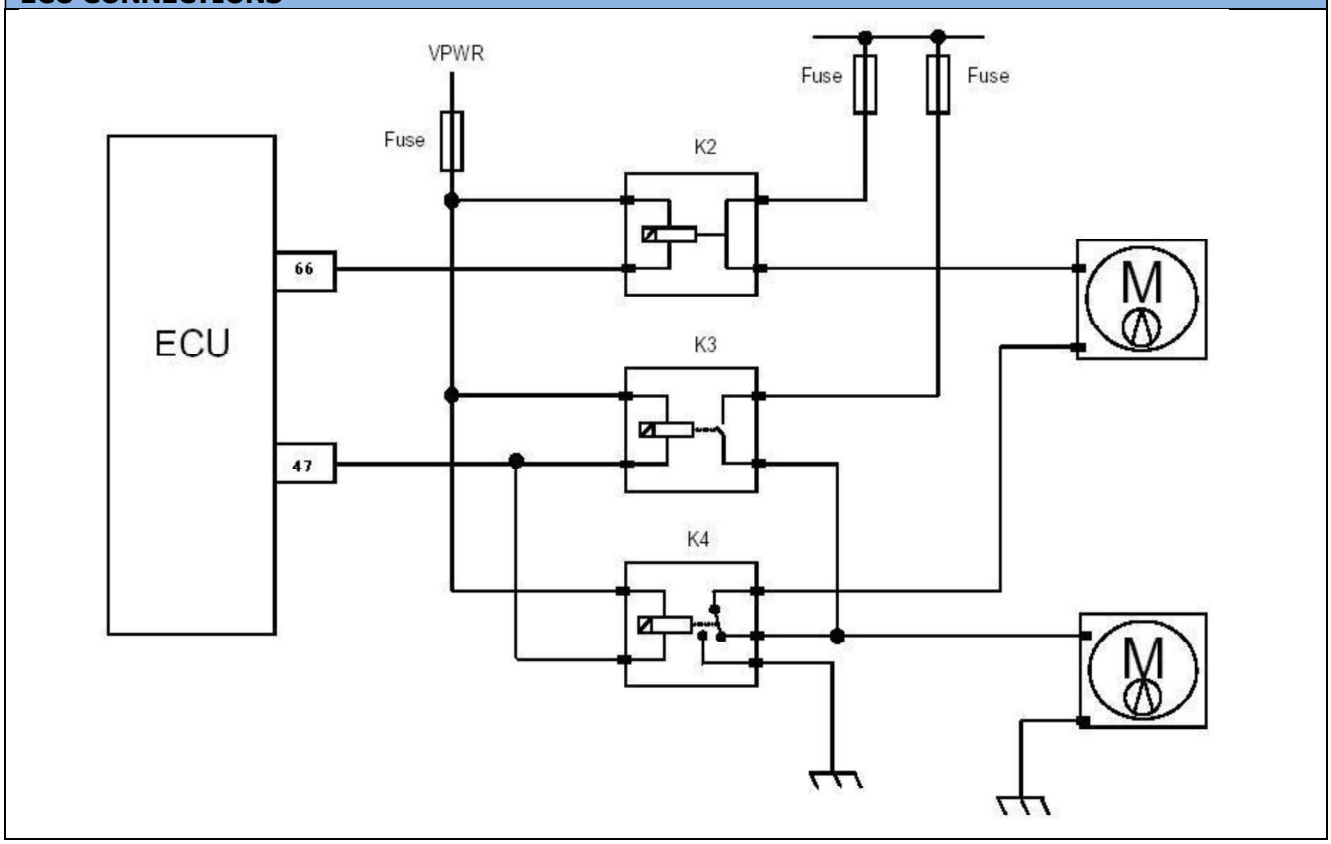

ECU - SUPPLY RELAY STRUCK

CODE	FAULT NAME	DIAGNOSTIC TOOL DESCRIPTION
P0685	ECU Relay Struck Time	If the power supply to ECU is continued although the time get elapsed, as specified in SMC_RELAY_STUCK_TIME_APV.

S No	ENVIRONMENT	UNITS
1	IN_BATTERY_VOLTAGE	Volt
2	P_L_COOLANT_TEMPERATURE	deg C
3	IN_ENGINE_CYCLE_SPEED	rpm
4	IN_IGNITION_SWITCH	on/off
5	ICV_VEHICLE_SPEED	km/hr
6	SMC-ENGINE_STATE	SMC_STOPPED,SMC_CRANKING, SMC_RUNNING,SMC_STALLING.
7	T_D_INDICATED_TORQUE	Nm
8	P_L_BATTERY_RAW	volt

RECOVERY MODE	
1	Turns Check engine lamp ON

TO CHECK	TO RECTIFY
1.Relay connection	1.Remove and connect again
2.ECU connection	2.Connect properly
3.Electrical wiring	3.Terminal backout, wire open circuit & short circuit
4.Relay functioning	4. Replace relay

ECU CONNECTIONS

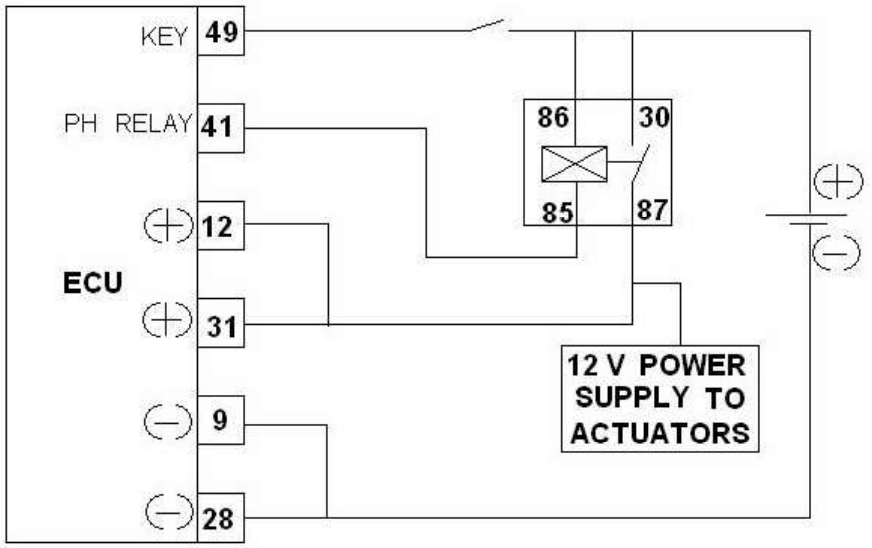

DROPOUT CU RELAY FAULT

CODE	FAULT NAME	DIAGNOSTIC TOOL DESCRIPTION
P1685	ECU -Relay Stuck open.	Supply Relay Open Circuit-unexpected.

S No	ENVIRONMENT	UNITS
1	IN_BATTERY_VOLTAGE	Volt
2	IN_BOOST_PRESSURE	bar
3	P_L_COOLANT_TEMPERATURE	deg C
4	IN_ENGINE_CYCLE_SPEED	RPM
5	IN_GEAR_RATIO	
6	ICV_VEHICLE_SPEED	km/hr
7	SMC-ENGINE_STATE	SMC_STOPPED,SMC_CRANKING, SMC_RUNNING,SMC_STALLING.
8	T_D_INDICATED_TORQUE	Nm

RECOVERY MODE	

TO CHECK	TO RECTIFY
1.Relay connection	1.Remove and connect again
2.ECU connection	2.Connect properly
3.Electrical wiring	3.Terminal backout, wire open circuit & short circuit
4.Relay functioning	4. Replace relay

ECU CONNECTIONS

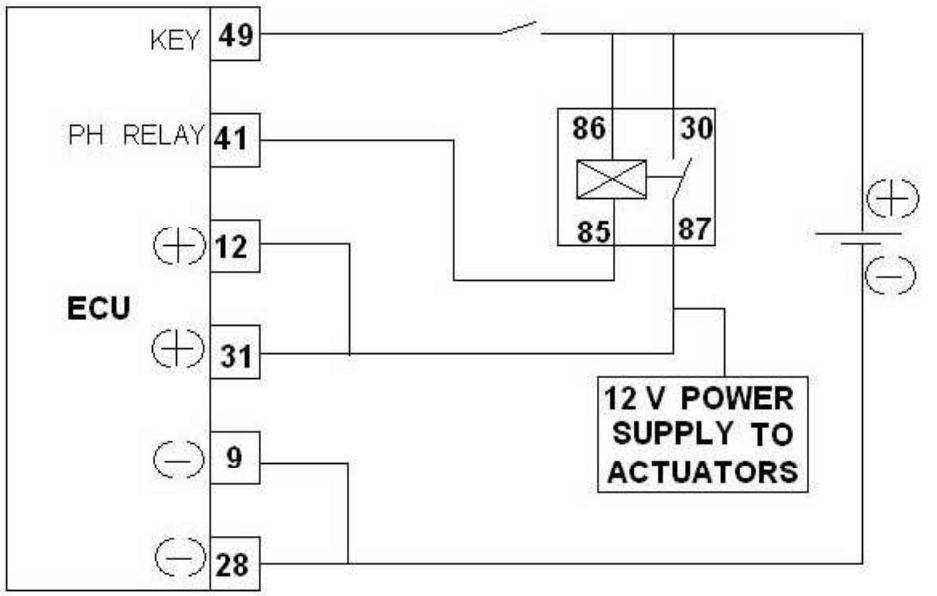

EGR VALVE DRIVE DUTY FAULT

CODE	FAULT NAME	DIAGNOSTIC TOOL DESCRIPTION
P0489	F_M_EGR_VALVE_DRIVE	Electrical fault - Short to Ground / Open Circuit
P0490	F_M_EGR_VALVE_DRIVE	Electrical fault - Short to Vbat

S No	ENVIRONMENT	UNITS
1	ACM_EGR_VALVE_DRIVE_DUTY_CYCLE	%
2	IN_AMF_FEEDBACK	mg/st
3	IN_BATTERY_VOLTAGE	V
4	IN_BOOST_PRESSURE	bar
5	P_L_COOLANT_TEMPERATURE	deg
6	IN_ENGINE_CYCLE_SPEED	rpm
7	ICV_VEHICLE_SPEED	km/h
8	T_D_INDICATED_TORQUE	Nm

RECOVERY MODE	
1	Turns MIL lamp ON
2	Disable EGR control (airflow)

TO CHECK	TO RECTIFY
1.Check actuator connection	Ensure EVRV is connected properly
2.Check resistance of actuator	Ensure EVRV & EGR valve functions properly
3.Check ECU connection	Ensure ECU is connected
4.Check continuity and electrical isolation	Ensure electrical & pneumatic continuity

ECU CONNECTIONS

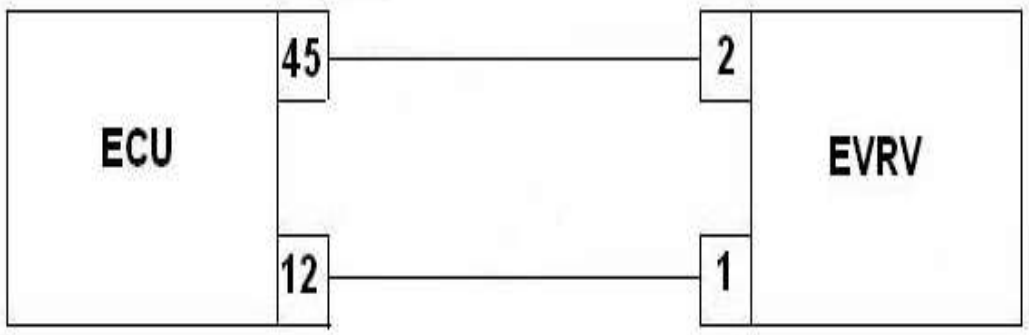

EGR CONTROL ERROR FAULT:-

CODE	FAULT NAME	DIAGNOSTIC TOOL DESCRIPTION
P0400	F_M_EGR_ERROR_AIR_FAULT	EGR control error (airflow error too high/too low)
P024B	F_M_EGR_STUCK_OPEN_FAULT	EGR Valve stuck

S No	ENVIRONMENT	UNITS
1	ACM_EGR_VALVE_DRIVE_DUTY_CYCLE	%
2	IN_AMF_FEEDBACK	mg/st
3	IN_BATTERY_VOLTAGE	V
4	IN_BOOST_PRESSURE	bar
5	P_L_COOLANT_TEMPERATURE	deg
6	IN_ENGINE_CYCLE_SPEED	rpm
7	ICV_VEHICLE_SPEED	km/h
8	T_D_INDICATED_TORQUE	Nm

RECOVERY MODE	
1	Turns on check Engine lamp

TO CHECK	TO RECTIFY
1.Check air inlet circuit	Ensure EVRV is connected properly
2.Valve state	Ensure EVRV & EGR valve functions properly
3.Depression circuit	Ensure ECU is connected
4.Vacuum value pump	Ensure electrical & pneumatic continuity
5.Open solenoid valve	Ensure Air intake system is not clogged

ECU CONNECTIONS

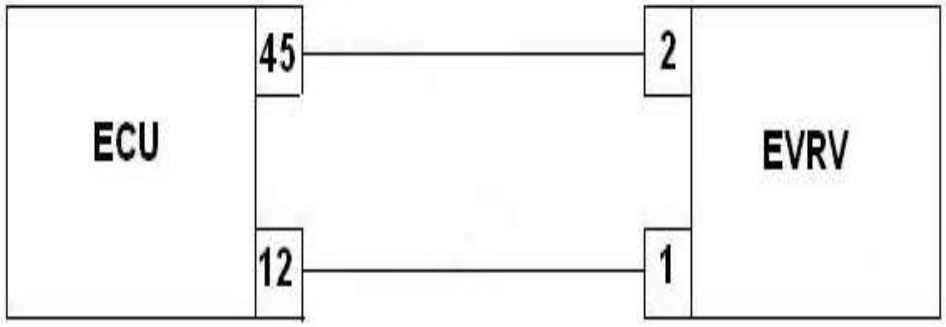

INJECTOR COMBUSTION - TOO LOW

CODE	FAULT NAME	DIAGNOSTIC TOOL DESCRIPTION
P0263	Cylinder 1- Combustion Imbalance	Combustion Imbalance in cyl 1
P0272	Cylinder 2- Combustion Imbalance	Combustion Imbalance in cyl 2
P0269	Cylinder 3- Combustion Imbalance	Combustion Imbalance in cyl 3

S No	ENVIRONMENT	UNITS
1	IN_BATTERY VOLTAGE	Volt
2	P_L_COOLANT_TEMPERATURE	deg C
3	IN_ENGINE_CYCLE_SPEED	rpm
4	IN_RAIL_PRESSURE_FEEDBACK	bar
5	ICV_VEHICLE_SPEED	km/h
6	T_D_INDICATED_TORQUE	Nm
7	P_L_BATTERY_RAW	Volt

RECOVERY MODE	
1	Turns CE lamp ON
2	SPC disable
3	Disables EGR

TO CHECK	TO RECTIFY
1. Check if any fault codes related to Injector electrical faults	1. Refer fault tree of Injector electrical fault
2. Combustion leakage	2. Take necessary action
3. Inlet manifold for clogging	3. Clean inlet ducts
4. Injector HP diagnostics	4. Replace injector if found faulty
5. ECU	5. Replace ECU

ECU CONNECTIONS

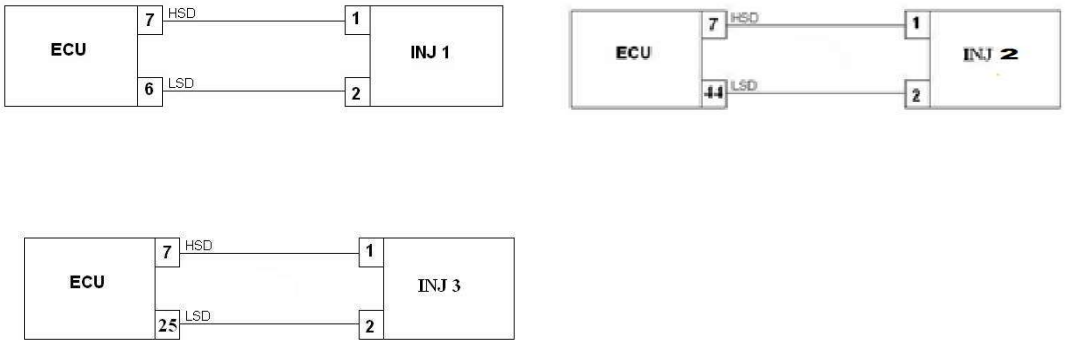

INJECTOR- OPEN CIRCUIT

CODE	FAULT NAME	DIAGNOSTIC TOOL DESCRIPTION
P0201	Open circuit fault - Injector 1	Injector 1 Open Circuit.
P0203	Open circuit fault - Injector 2	Injector 2 Open Circuit.
P0204	Open circuit fault - Injector 3	Injector 3 Open Circuit.

S No	ENVIRONMENT	UNITS
1	IN_BATTERY VOLTAGE	Volt
2	IN_BOOST_PRESSURE	BAR
3	P_L_COOLANT_TEMPERATURE	deg C
4	IN_ENGINE_CYCLE_SPEED	rpm
5	ICV_VEHICLE_SPEED	km/h
6	T_D_INDICATED_TORQUE	Nm
7	P_L_BATTERY_RAW	Volt

RECOVERY MODE	
1	Turns Check Engine Lamp(CEL) ON.
2	Disable pulse width correction
3	Disable RPC trim calculation
4	Disable SPC strategy
5	Activates reduced torque mode
6	Disables RVD
7	Disables EGR
8	Disables IM Trim Calculation
9	Turns on MIL lamp

TO CHECK	TO RECTIFY
1. Key off & check injector connection	1.Remove and connect again
2. ECU connection	2.Connect properly

ECU CONNECTIONS

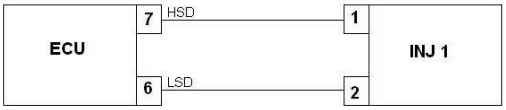

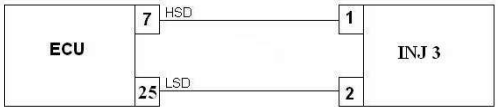

INJECTOR – SHORT CIRCUIT

CODE	FAULT NAME	DIAGNOSTIC TOOL DESCRIPTION
P1201	Short circuit HSD to LSD (Injector 1)	Short circuit HSD to LSD (Injector 1)
P1203	Short circuit HSD to LSD (Injector 2)	Short circuit HSD to LSD (Injector 2)
P1204	Short circuit HSD to LSD (Injector 3)	Short circuit HSD to LSD (Injector 3)

S No	ENVIRONMENT	UNITS
1	IN_BATTERY_VOLTAGE	Volt
2	IN_BOOST_PRESSURE	bar
3	P_L_COOLANT_TEMPERATURE	deg C
4	IN_ENGINE_CYCLE_SPEED	rpm
5	IN_VEHICLE_SPEED	Km/hr
6	SMC_ENGINE_STATE	SMC_STOPPED,SMC_CRANKING,SMC_RUNNING,SMC_STALLING.
7	T_D_INDICATED_TORQUE	Nm

RECOVERY MODE	
1	Turns Check Engine Lamp(CEL) ON.
2	Disable pulse width correction
3	Disable SPC strategy
4	Activates reduced torque mode
5	Disables RVD
6	Disables injection Balacing
7	Disables all injections
8	Disables EGR
9	Disables IM Trim Calculation
10	Disables RPC Trims Calculation
11	Disables ISO test for injector
12	turns on MIL lamp

TO CHECK	TO RECTIFY
1.Electrical wiring	1.Terminal backout, wire short circuit
2. Defective injector	2.Change corr. Injector and update I2C

ECU CONNECTIONS

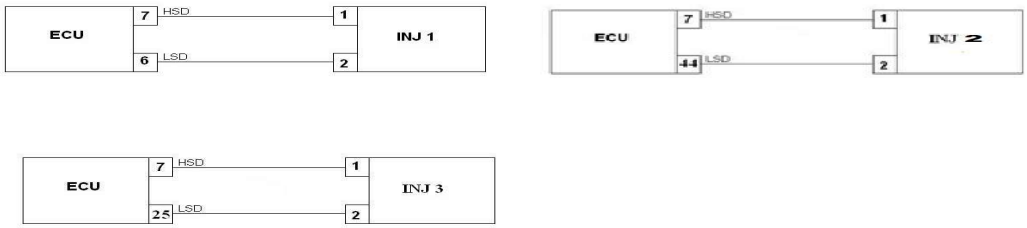

IMV-INLET METERING VALVE

CODE	FAULT NAME	DIAGNOSTIC TOOL DESCRIPTION
P0251	IMV drive fault (electrical)-short circuit	IMV drive Fault-Short Circuit to Positive.
P0253	IMV drive fault (electrical)-short to GND	IMV drive Fault-Short Circuit to Ground.
P0255	IMV drive fault (electrical)-open circiut	IMV Drive Fault- Open circuit.

S No	ENVIRONMENT	UNITS
1	IN_BATTERY_VOLTAGE	Volt
2	P_L_COOLANT_TEMPERATURE	deg C
3	IN_ENGINE_CYCLE_SPEED	rpm
4	IN_RAIL_PRESSURE_FEEDBACK	bar
5	ICV_VEHICLE_SPEED	Km/hr
6	T_D_INDICATED_TORQUE	Nm
7	RPC_IM_CRT_DMND	mA

RECOVERY MODE	
1	Turns Check Engine Lamp(CEL) ON.
2	Engine stops after delay
3	Disable pilot and post injections
4	Disables RVD
5	Disable IM trim calculation
6	Disables cylinder balancing
7	Disables RP control fault detection
8	Disables leak detection test
9	Torque reduction
10	Turns MI Lamp on
11	Activates Forced open IM Group
12	Activates Pressure limiting group
13	Disables injector Balancing
14	Deactivates over rail pressure test
15	Disables RP Build Measurement
16	Disables RP control fault detection

TO CHECK	TO RECTIFY
1. IMV connection	1.Remove and connect again
2. Electrical wiring	2.Terminal backout, wire open circuit & short circuit
3. ECU connection	3.Connect properly
4. IMV electrical resistance on HP pump (5.3 max)	4.Change IMV

ECU CONNECTIONS

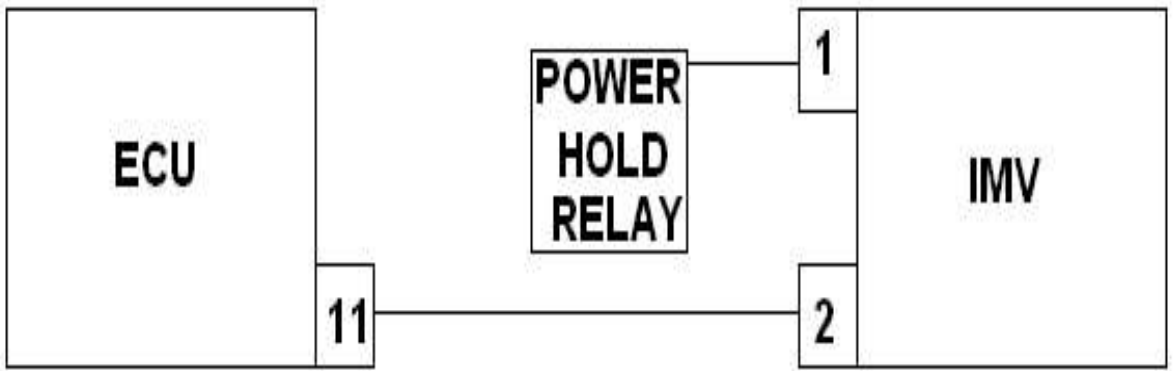

CAM SIGNAL FAULT

CODE	FAULT NAME	DIAGNOSTIC TOOL DESCRIPTION
P0340	CAM signal lost fault	Cam wheel has Stalled **(or)**Cam Signal Lost.
P0341	CAM signal fault - not synchronised with crank	Cam Signal has been detected but not Synchronized with Crank.

S No	ENVIRONMENT	UNITS
1	IN_BATTERY_VOLTAGE	Volt
2	IN_BOOST_PRESSURE	bar
3	P_L_COOLANT_TEMPERATURE	deg C
4	IN_ENGINE_CYCLE_SPEED	rpm
5	SMC_ENGINE_STATE	%
6	IN_VEHICLE_SPEED	Km/hr
7	T_D_INDICATED_TORQUE	Nm

RECOVERY MODE	
1	Turns Check Engine Lamp(CEL) ON.

TO CHECK	TO RECTIFY
1.CAM sensor connection	1.Remove and connect again
2. Electrical wiring	2.Terminal backout, wire open circuit & short circuit
3. ECU connection	3.Connect properly
4. Cam Target wheel position with TDC	4.Take necessary action
5. Crank missing teeth position w.r.t TDC	5.Take necessary action

ECU CONNECTIONS

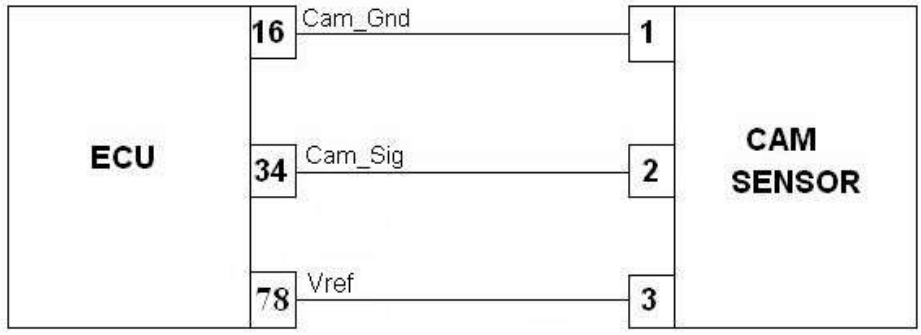

CRANKSHAFT SIGNAL FAULT

CODE	FAULT NAME	DIAGNOSTIC TOOL DESCRIPTION
P0335	Crank signal Lost	Crank Wheel has stalled **(Or)** Crank Signal is lost.
P0336	Crank signal fault - loss of gap	Crank Signal fault- No gap detected.
P0371	Crank early fault	Crank Shaft event is too close to the previous one.
P0372	Crank signal fault - missing tooth	Shifted/Missing cam edge

S No	ENVIRONMENT	UNITS
1	IN_BATTERY_VOLTAGE	Volt
2	IN_BOOST_PRESSURE	bar
3	P_L_COOLANT_TEMPERATURE	deg C
4	IN_ENGINE_CYCLE_SPEED	rpm
5	SMC_ENGINE_STATE	SMC_STOPPED,SMC_CRANKING, SMC_RUNNING,SMC_STALLING.
6	ICV_VEHICLE_SPEED	Km/hr
7	T_D_INDICATED_TORQUE	Nm

RECOVERY MODE	
1	Turns Check Engine Lamp(CEL) ON.

TO CHECK	TO RECTIFY
1. Crank Sensor connection	1.Remove and connect again
2. Electrical wiring	2.Terminal backout, wire open circuit & short circuit
3. Sensor malfunctioning	3.Clean / Change sensor
4. Air Gap	4.Put Copper washer
5. Engine Cam shaft / Crank Shaft timing	5.Check timing and rectify
6. Flywheel Teeth Dimension / Flywheel reference	6.Clean / Change wheel. Check flywheel reference

ECU CONNECTIONS

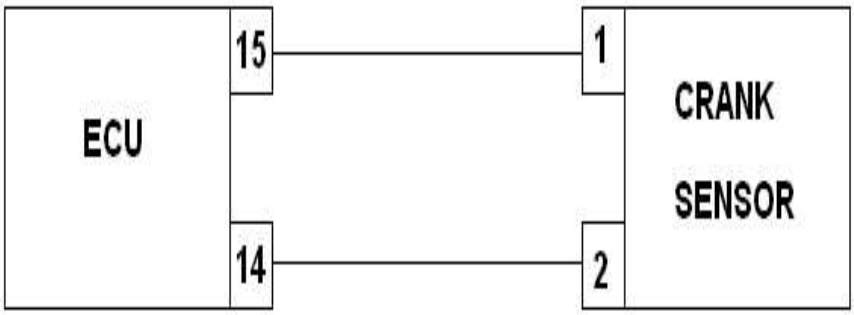

INJECTOR-HARNESS RESISTANCE FAULT

CODE	FAULT NAME	DIAGNOSTIC TOOL DESCRIPTION
P1286	Wiring Harness resistance too Low - (Injector 1).	Measured resistance value equal to or less than the calibrated threshold Value - INJECTOR 1
P1287	Wiring Harness resistance too high - (Injector 1).	Measured resistance value equal to or greater than the calibrated threshold value - INJECTOR 1
P1286	Wiring Harness resistance too Low - (Injector 2).	Measured resistance value equal to or less than the calibrated threshold Value - INJECTOR 2
P1287	Wiring Harness resistance too high - (Injector 2).	Measured resistance value equal to or greater than the calibrated threshold value - INJECTOR 2
P1286	Wiring Harness resistance too Low - (Injector 3).	Measured resistance value equal to or less than the calibrated threshold Value - INJECTOR 3
P1287	Wiring Harness resistance too high - (Injector 3).	Measured resistance value equal to or greater than the calibrated threshold value - INJECTOR 3

S No	ENVIRONMENT	UNITS
1	IN_BATTERY_VOLTAGE	Volt
2	IN_BOOST_PRESSURE	bar
3	P_L_COOLANT_TEMPERATURE	deg C
4	IN_ENGINE_CYCLE_SPEED	rpm
5	IN_RAIL_PRESSURE_FEEDBACK	bar
6	ICV_VEHICLE_SPEED	Km/hr
7	SMC_ENGINE_STATE	SMC_STOPPED,SMC_CRANKING, SMC_RUNNING,SMC_STALLING.
8	T_D_INDICATED_TORQUE	Nm

RECOVERY MODE	
1	Turns Check engine Lamp On
2	Disables Pulse with Corrction
3	Disables Injection.
4	Disables RVD
5	Disables RPC trim calculation

TO CHECK	TO RECTIFY
1. Disconnect Injector and check connector	1. Rectify terminal back out/ Replace connector
2. Continuity between two injector terminals	2. Replace injector if open circuit
3. ECU connection	3. Remove and refit connector.
4. Electrical continuity in wiring harness	4. Perform necessary repair
5. If problem persists	5. Replace injector
6. ECU	6. Replace ECU

ECU CONNECTIONS

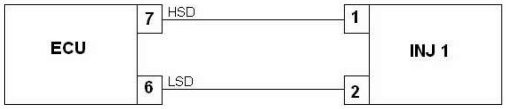

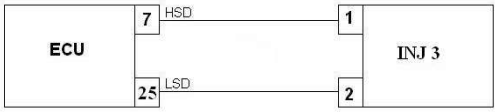

SENSOR 5 V SUPPLY FAULT(Vext 1)

CODE	FAULT NAME	DIAGNOSTIC TOOL DESCRIPTION
P0642	5 volt Sensor Supply - Low.(Vext 1)	Sensor Supply voltage falls below the calibrated value.
P0643	5 volt Sensor Supply - High.(Vext 1)	Sensor Supply voltage exceeds the calibrated value.

S No	ENVIRONMENT	UNITS
1	IN_BATTERY_VOLTAGE	Volt
2	IN_BOOST_PRESSURE	bar
3	P_L_COOLANT_TEMPERATURE	deg C
4	IN_ENGINE_CYCLE_SPEED	rpm
5	ICV_VEHICLE_SPEED	Km/hr
6	T_D_INDICATED_TORQUE	Nm
7	P_L_VEXT1_RAW	Volt
8	P_L_VEXT2_RAW	Volt

RECOVERY MODE	
1	Turns ON Check engine lamp
2	Disables Pilot and Post injection
3	Engine stop after delay
4	Disables RVD
5	Disables RPC trim calculation
6	Disables cylinder balancing
7	Disables leak detection test
8	Limp home mode activated (No pedal response; raised idle speed)
9	Torque reduction
10	deactivates Over rail pressure test
11	Activates Pressure Limiting group
12	Turns MI lamp on
13	Disables RPC control error fault detection
14	Disables RP build Measurement
15	Disables Injector Balancing
16	Disables EGR
17	Disables SPC

TO CHECK	TO RECTIFY
1.Sensor connection supplied by ECU (TMap, RP, Pedal track1, MAF)	1.Check individual corretion and connect
2.Apply Diagonastic charts of respective sensors	2.Remove and connect again.
	3.Terminal backout, wire short circuit.
	4.Connect properly.
	5.Change sensor.

SENSOR 5 V SUPPLY FAULT(Vext 2)

CODE	FAULT NAME	DIAGNOSTIC TOOL DESCRIPTION
P0652	5 volt Sensor Supply - Low.(Vext 2)	Sensor Supply voltage falls below the calibrated value.
P0653	5 volt Sensor Supply - High.(Vext 2)	Sensor Supply voltage exceeds the calibrated value.

S No	ENVIRONMENT	UNITS
1	IN_BATTERY_VOLTAGE	Volt
2	IN_BOOST_PRESSURE	bar
3	P_L_COOLANT_TEMPERATURE	deg C
4	IN_ENGINE_CYCLE_SPEED	rpm
5	ICV_VEHICLE_SPEED	Km/hr
6	T_D_INDICATED_TORQUE	Nm
7	P_L_VEXT1_RAW	Volt
8	P_L_VEXT2_RAW	Volt

RECOVERY MODE	
1	Turns Check engine lamp ON
2	Disables EGR
3	Torque reduction

TO CHECK	TO RECTIFY
1.Sensor connection supplied by ECU (Cam & Pedal track2)	1.Check individual corretion and connect
2.Apply Diagonastic charts of respective sensors	2.Remove and connect again.
	3.Terminal backout, wire open circuit & short circuit.
	4.Connect properly.
	5.Change sensor.

BATTERY VOLTAGE SIGNAL FAULT

CODE	FAULT NAME	DIAGNOSTIC TOOL DESCRIPTION
P0562	Battery voltage signal – low (short circuit)	Battery Voltage falls below 6 volts.
P0563	Battery voltage signal – high (open circuit)	Battery Voltage falls below 18 volts.

S No	ENVIRONMENT	UNITS
1	IN_BATTERY_VOLTAGE	Volt
2	P_L_COOLANT_TEMPERATURE	deg C
3	IN_ENGINE_CYCLE_SPEED	rpm
4	SMC_ENGINE_STATE	SMC_STOPPED,SMC_CRANKING, SMC_RUNNING,SMC_STALLING.
5	T_D_INDICATED_TORQUE	Nm
6	P_L_VEXT1_RAW	Volt
7	P_L_VEXT2_RAW	Volt
8	P_L_BATTERY_RAW	Volt

RECOVERY MODE	
1	Turns Check Engine Lamp(CEL) ON.
2	Turns MI Lamp(MIL) ON.
3	Disable injector pulse width correction
4	Disable RVD
5	Disable IMV trim detection
6	Disable leak detection
7	Disable AC
8	Disables RPC Trims calculations
9	Disable EGR
10	Torque reduction
11	Activates pressure limiting group

TO CHECK	TO RECTIFY
1. Battery and ECU connections	Connect properly
2. Resistance between chassis & ECU ground	Fix ECU & Battery ground firmly
3. Battery charge circuit (Insulation on battery positive cable)(Alternator circuit)	Change battery positive cable
4. Battery voltage at key on (min 9 V) (Min voltage for ECU is 6 volts - considering 2.5 Volts reduction during cranking)	Change battery

WATER IN FUEL FAULT

CODE	FAULT NAME	DIAGNOSTIC TOOL DESCRIPTION
P2269	Water in Fuel fault.	Water in fuel detected.

S No	ENVIRONMENT	UNITS
1	IN_BATTERY_VOLTAGE	volt
2	IN_BOOST_PRESSURE	bar
3	P_L_COOLANT_TEMPERATURE	deg C
4	IN_ENGINE_CYCLE_SPEED	rpm
5	IN_RAIL_PRESSURE_FEEDBACK	bar
6	ICV_VEHICLE_SPEED	Km/hr
7	T_D_INDICATED_TORQUE	Nm

RECOVERY MODE	
1	Turns WIF Lamp ON.
2	Disables EGR
3	Activates Engine max speed reduced

TO CHECK	TO RECTIFY
1. Presence of water in filter	Drain and check for water in LP circuit

ECU CONNECTIONS

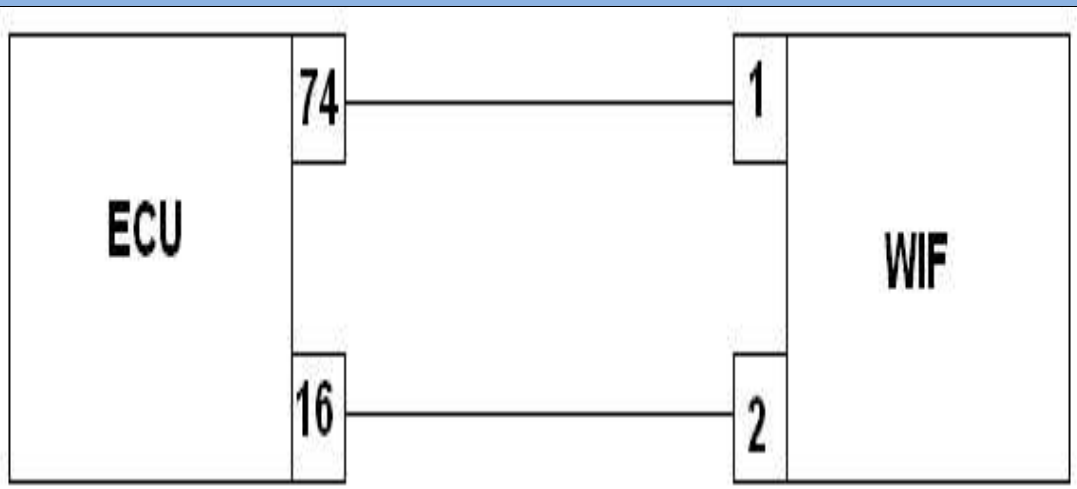

WATER IN FUEL SENSOR FAULT

CODE	FAULT NAME	DIAGNOSTIC TOOL DESCRIPTION
P2266	Water in fuel feedback fault	fault due to Short circuit
P2264	Water in fuel feedback fault	fault due to open circuit or VBAT

S No	ENVIRONMENT	UNITS
1	IN_BATTERY_VOLTAGE	volt
2	IN_BOOST_PRESSURE	bar
3	P_L_COOLANT_TEMPERATURE	deg C
4	IN_ENGINE_CYCLE_SPEED	rpm
5	IN_RAIL_PRESSURE_FEEDBACK	bar
6	ICV_VEHICLE_SPEED	Km/hr
7	T_D_INDICATED_TORQUE	Nm

RECOVERY MODE	
1	Turns CE Lamp ON.
2	Disables EGR
3	Torque reduction

TO CHECK	TO RECTIFY
1. Sensor connection	Remove and connect again
2. Electrical wiring	Terminal backout, wire open circuit & short circuit
3. Sensor malfunctioning	Change sensor

ECU CONNECTIONS

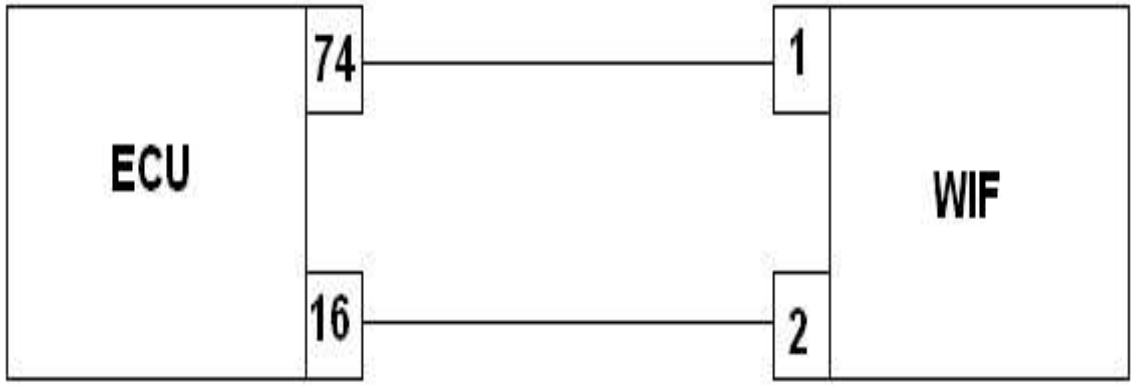

INJECTOR DRIVE FAULT

CODE	FAULT NAME	DIAGNOSTIC TOOL DESCRIPTION
P2147	Injector bank 1 fault	Injector bank 1 fault - shorted to GND
P2148	Injector bank 1 fault	Injector bank 1 fault - shorted to VBATT

S No	ENVIRONMENT	UNITS
1	IN_BATTERY_VOLTAGE	Volt
2	IN_BOOST_PRESSURE	bar
3	P_L_COOLANT_TEMPERATURE	deg C
4	IN_ENGINE_CYCLE_SPEED	rpm
5	ICV_VEHICLE_SPEED	Km/hr
6	SMC_ENGINE_STATE	SMC_STOPPED,SMC_CRANKING,SMC_RUNNING,SMC_STALLING.
7	T_D_INDICATED_TORQUE	Nm

RECOVERY MODE	
1	Turns Check Engine Lamp(CEL) ON.
2	Disables RVD
3	Disable all injections
4	Disable IM trim calculations
5	Disables leak Diagnostic Routine
6	Disables RPC trims Calculation
7	Turns on MIL lamp
8	Disables Injection Balancing
9	Disable pulse width correction

TO CHECK	TO RECTIFY
check continuity in wiring harness	Terminal back out and continuity of wires
	change wiring harness

ECU CONNECTIONS

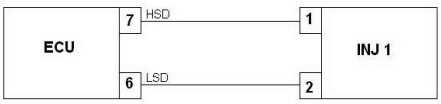

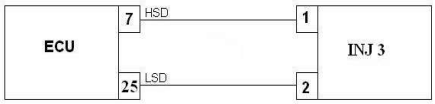

ATMOSPHERIC PRESSURE FAULT

CODE	FAULT NAME	DIAGNOSTIC TOOL DESCRIPTION
P1107	ATMOSPHERIC PRESSURE FAULT	Global Atmospheric pressure fault

S No	ENVIRONMENT	UNITS
1	IN_BATTERY_VOLTAGE	Volt
2	IN_BOOST_PRESSURE	bar
3	P_L_COOLANT_TEMPERATURE	deg C
4	IN_ENGINE_CYCLE_SPEED	rpm
5	ICV_VEHICLE_SPEED	Km/hr
6	SMC_ENGINE_STATE	SMC_STOPPED,SMC_CRANKING, SMC_RUNNING,SMC_STALLING.
7	T_D_INDICATED_TORQUE	Nm

RECOVERY MODE	
1	Turns Check engine Lamp ON
2	Turns MI Lamp ON
3	Disables EGR
4	Torque reduction

TO CHECK	TO RECTIFY
1. ECU	1. Replace ECU

ECU CONNECTIONS
INTERNAL TO ECU

ATMOSPHERIC PRESSURE SENSOR FAULT

CODE	FAULT NAME	DIAGNOSTIC TOOL DESCRIPTION
P0107	ATMOSPHERIC PRESSURE SENSOR FAULT LOW	Atmospheric sensor low fault
P0108	ATMOSPHERIC PRESSURE SENSOR FAULT HIGH	Atmospheric sensor high fault
P0109	ATMOSPHERIC PRESSURE SENSOR FAULT GRADABILITY	Atmospheric sensor gradability fault

S No	ENVIRONMENT	UNITS
1	IN_BATTERY_VOLTAGE	Volt
2	IN_BOOST_PRESSURE	bar
3	P_L_COOLANT_TEMPERATURE	deg C
4	IN_ENGINE_CYCLE_SPEED	rpm
5	ICV_VEHICLE_SPEED	Km/hr
6	SMC_ENGINE_STATE	SMC_STOPPED,SMC_CRANKING, SMC_RUNNING,SMC_STALLING.
7	T_D_INDICATED_TORQUE	Nm

RECOVERY MODE	
1	Turns on check Engine lamp
2	Torque reduction
3	turns oin MIL lamp
4	Disable EGR

TO CHECK	TO RECTIFY
1. ECU	1. Replace ECU

ECU CONNECTIONS
INTERNAL TO ECU

PEDAL TRACK FAULT

CODE	FAULT NAME	DIAGNOSTIC TOOL DESCRIPTION
P0122	PEDAL TRACK1 FAULT LOW	Pedal sensor fault(electrical,track1)
P0123	PEDAL TRACK1 FAULT HIGH	Pedal sensor fault(electrical,track1)
P0222	PEDAL TRACK2 FAULT LOW	Pedal sensor fault(electrical,track2)
P0223	PEDAL TRACK2 FAULT HIGH	Pedal sensor fault(electrical,track2)

S No	ENVIRONMENT	UNITS
1	IN_BATTERY_VOLTAGE	V
2	IN_ENGINE_CYCLE_SPEED	rpm
3	IN_GEAR_RATIO	
4	ICV_VEHICLE_SPEED	km/hr
5	T_D_INDICATED TORQUE	Nm
6	P_L_VEXT1_RAW	Volt
7	P_L_VEXT2_RAW	Volt
8	P_L_BATTERY_RAW	Volt

RECOVERY MODE	
1	Pedal reduction fault activated
2	Disables EGR
3	turns on CE Lamp

TO CHECK	TO RECTIFY
Pedal sensor connection	1.Remove and connect again
Electrical wiring	2.Terminal backout, wire open circuit & short circuit
ECU connection	3.Connect properly
Pedal Sensor malfunctioning	4.Change sensor

ECU CONNECTIONS

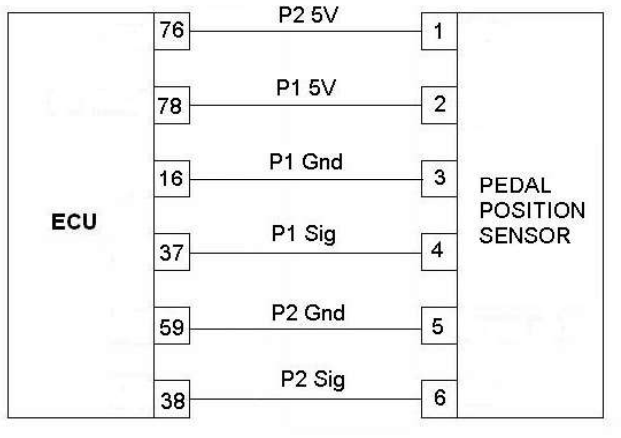

PEDAL CORRELATION FAULT

CODE	FAULT NAME	DIAGNOSTIC TOOL DESCRIPTION
P2135	PEDAL CORRELATION FAULT	Pedal sensor fault (correlation between tracks 1 and 2)

S No	ENVIRONMENT	UNITS
1	IN_BATTERY_VOLTAGE	V
2	P_L_COOLANT_TEMPERATURE	deg C
3	IN_ENGINE_CYCLE_SPEED	rpm
4	IN_GEAR_RATIO	
5	ICV_VEHICLE_SPEED	km/hr
6	T_D_INDICATED TORQUE	Nm
7	P_L_VEXT1_RAW	Volt
8	P_L_VEXT2_RAW	Volt

RECOVERY MODE	
1	Pedal reduction group activated
2	Disables EGR
3	turns on CE Lamp

TO CHECK	TO RECTIFY
Pedal sensor connection	1.Remove and connect again
Electrical wiring	2.Terminal backout, wire open circuit & short circuit
ECU connection	3.Connect properly
Pedal Sensor malfunctioning	4.Change sensor

ECU CONNECTIONS

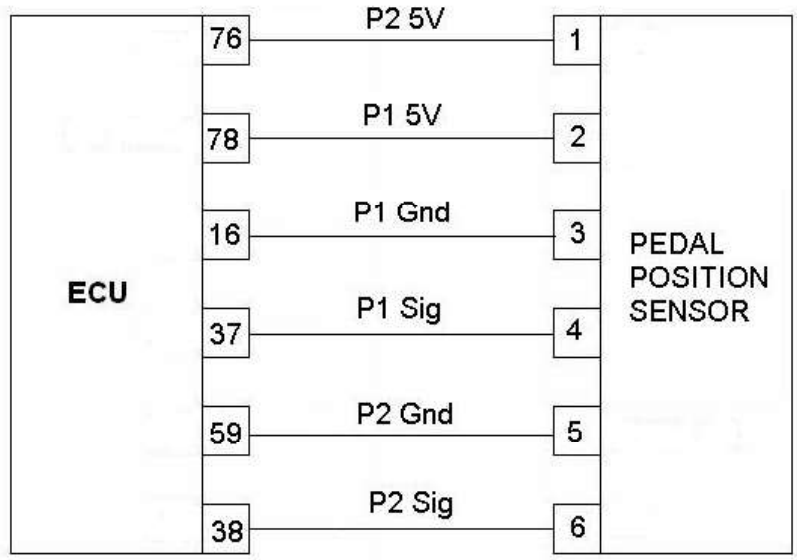

PEDAL LIMPH FAULT

CODE	FAULT NAME	DIAGNOSTIC TOOL DESCRIPTION
P0120	PEDAL LIMPH FAULT	Pedal sensor fault (triggers limp home mode)

S No	ENVIRONMENT	UNITS
1	IN_BATTERY_VOLTAGE	V
2	P_L_COOLANT_TEMPERATURE	deg C
3	IN_ENGINE_CYCLE_SPEED	rpm
4	IN_GEAR_RATIO	
5	ICV_VEHICLE_SPEED	km/hr
6	T_D_INDICATED TORQUE	Nm
7	P_L_VEXT1_RAW	Volt
8	P_L_VEXT2_RAW	Volt

RECOVERY MODE	
1	Limp Home mode activated (No pedal response; Raised Idle speed
2	Turns CE lamp ON

TO CHECK	TO RECTIFY
Pedal sensor connection	1.Remove and connect again
Electrical wiring	2.Terminal backout, wire open circuit & short circuit
ECU connection	3.Connect properly
Pedal Sensor malfunctioning	4.Change sensor

ECU CONNECTIONS

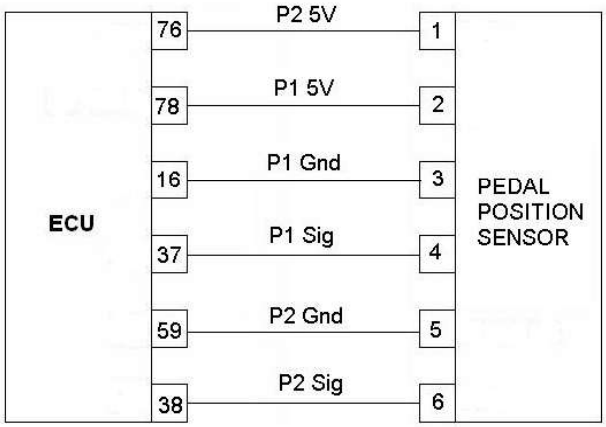

PEDAL REDUCTION FAULT

CODE	FAULT NAME	DIAGNOSTIC TOOL DESCRIPTION
P1121	PEDAL REDUCTION FAULT	Pedal sensor fault (triggers reduced torque mode)

S No	ENVIRONMENT	UNITS
1	IN_BATTERY_VOLTAGE	V
2	P_L_COOLANT_TEMPERATURE	deg C
3	IN_ENGINE_CYCLE_SPEED	rpm
4	IN_GEAR_RATIO	
5	ICV_VEHICLE_SPEED	km/hr
6	T_D_INDICATED TORQUE	Nm
7	P_L_VEXT1_RAW	Volt
8	P_L_VEXT2_RAW	Volt

RECOVERY MODE	
1	Torque reduction
2	Turns CE lamp ON

TO CHECK	TO RECTIFY
Pedal sensor connection	1.Remove and connect again
Electrical wiring	2.Terminal backout, wire open circuit & short circuit
ECU connection	3.Connect properly
Pedal Sensor malfunctioning	4.Change sensor

ECU CONNECTIONS

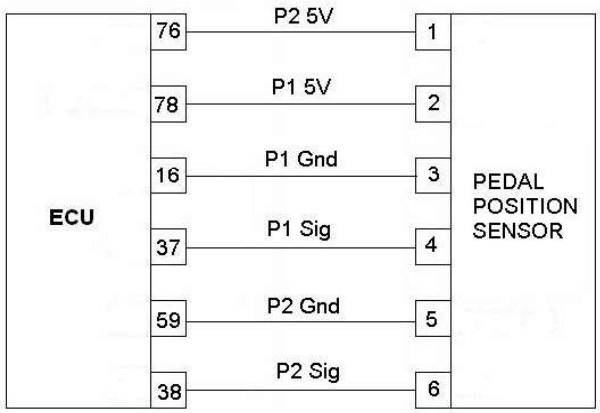

PEDAL STUCK FAULT

CODE	FAULT NAME	DIAGNOSTIC TOOL DESCRIPTION
P2299	PEDAL STUCK FAULT	Accelerator pedal is stuck in a position above zero

S No	ENVIRONMENT	UNITS
1	IN_BATTERY_VOLTAGE	V
2	P_L_COOLANT_TEMPERATURE	deg C
3	IN_ENGINE_CYCLE_SPEED	rpm
4	IN_GEAR_RATIO	
5	ICV_VEHICLE_SPEED	km/hr
6	T_D_INDICATED TORQUE	Nm
7	P_L_VEXT1_RAW	Volt
8	P_L_VEXT2_RAW	Volt

RECOVERY MODE	
1	Limp Home activated (No pedal response; Raised idle speed)
2	Turns CE lamp ON

TO CHECK	TO RECTIFY
Pedal sensor connection	1.Remove and connect again
Brake switch continuously ON	5.Check brake switch setting / wiring
Electrical wiring	2.Terminal backout, wire open circuit & short circuit
ECU connection	3.Connect properly

ECU CONNECTIONS

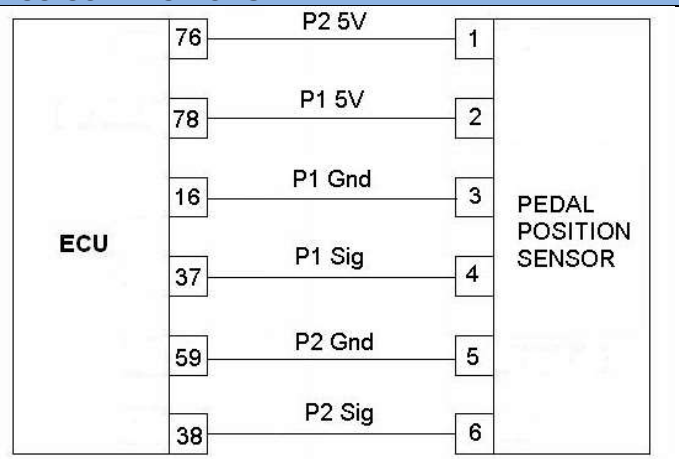

CLUTCH SWITCH FAULT

CODE	FAULT NAME	DIAGNOSTIC TOOL DESCRIPTION
P0704	CLUTCH SWITCH FAULT	A fault in clutch signal

S No	ENVIRONMENT	UNITS
1	IN_BATTERY_VOLTAGE	V
2	P_L_COOLANT_TEMPERATURE	deg C
3	IN_ENGINE_CYCLE_SPEED	rpm
4	IN_GEAR_RATIO	
5	ICV_VEHICLE_SPEED	km/hr
6	SMC_ENGINE_STATE	SMC_STOPPED,SMC_CRANKING, SMC_RUNNING,SMC_STALLING.
7	P_L_VEXT1_RAW	Volt
8	P_L_VEXT2_RAW	Volt

RECOVERY MODE	
1	Disables EGR

TO CHECK	TO RECTIFY
Check continuity	Fix Harness
If problem persists	Change Clutch Switch

ECU CONNECTIONS

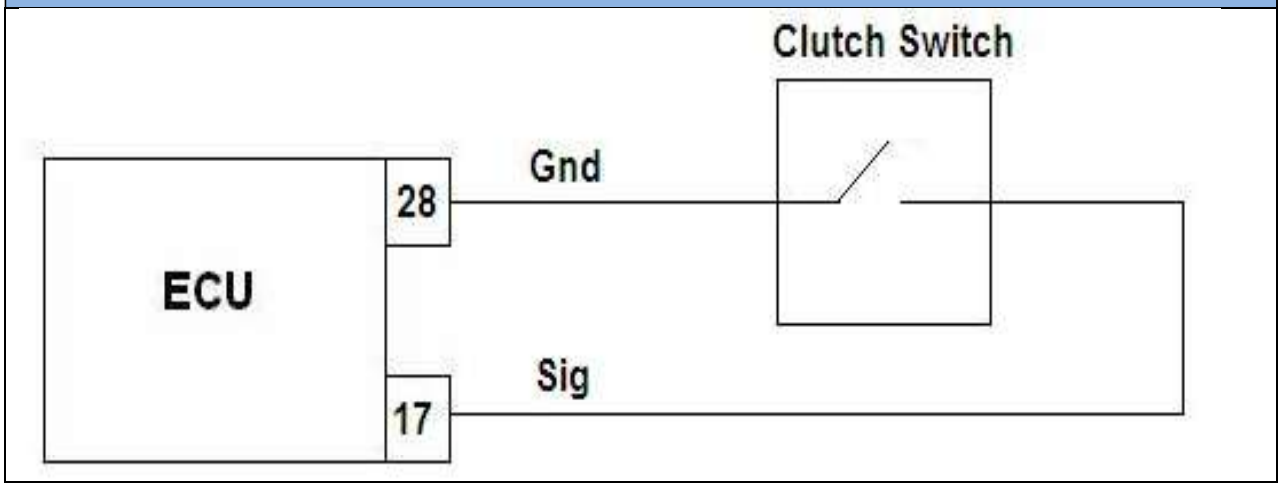

MDP MIN ABSOLUTE FAULT

CODE	FAULT NAME	DIAGNOSTIC TOOL DESCRIPTION
P1171	MDP MIN ABSOLUTE FAULT	This fault is raised when corrected value is less than the calibrated value for injector 1 regarding firing order
P1173	MDP MIN ABSOLUTE FAULT	This fault is raised when corrected value is less than the calibrated value for injector 3 regarding firing order
P1172	MDP MIN ABSOLUTE FAULT	This fault is raised when corrected value is less than the calibrated value for injector 2 regarding firing order

S No	ENVIRONMENT	UNITS
1	IN_BATTERY_VOLTAGE	Volt
2	IN_BOOST_PRESSURE	bar
3	P_L_COOLANT_TEMPERATURE	deg C
4	IN_ENGINE_CYCLE_SPEED	rpm
5	IN_INLET_AIR_TEMPERATURE	deg C
6	IN_RAIL_PRESSURE_FEEDBACK	bar
7	ICV_VEHICLE_SPEED	Km/hr
8	T_D_INDICATED_TORQUE	Nm

RECOVERY MODE	
1	Activates Reduced Torque mode
2	Disable Pilot and Post Injection
3	Disables RPC Trims Calculation
4	Disables RVD
5	Disables SPC
6	Turns on CE Lamp

TO CHECK	TO RECTIFY
1. Engine parameters	1. Rectify for high crank case pressure, compression leak, weak compression
2. Performin hydraulic static test on injector	2. Replace injector based on Static test

MDP NO UPDATE ZONE FAULT

CODE	FAULT NAME	DIAGNOSTIC TOOL DESCRIPTION
P029C	MDP NO UPDATE ZONE FAULT	Zone 1 fault
P02A4	MDP NO UPDATE ZONE FAULT	Zone 2 fault
P02A8	MDP NO UPDATE ZONE FAULT	Zone 3 fault
P02A0	MDP NO UPDATE ZONE FAULT	Zone 4 fault

S No	ENVIRONMENT	UNITS
1	IN_BATTERY_VOLTAGE	Volt
2	IN_BOOST_PRESSURE	Bar
3	P_L_COOLANT_TEMPERATURE	deg C
4	IN_ENGINE_CYCLE_SPEED	Rpm
5	IN_RAIL_PRESSURE_FEEDBACK	Bar
6	ICV_VEHICLE_SPEED	Km/hr
7	T_D_INDICATED_TORQUE	Nm

RECOVERY MODE	
1	Activates Reduced Torque mode
2	Turns on CE Lamp
3	Disables RVD

TO CHECK	TO RECTIFY
1. Check faults related to SPC disable: P0237, 0238, 1235, 1236, 0263, 0272, 0266, 0269, 0201, 0202, 0203, 0204, 0261, 0267, 0270, 0264, 0192, 0193, 0190, 0194, 1191, 1192, 1193, 0097, 0098, 0500	1. Carry out rectification action for the corresponding fault

ECU SAFETY MONITORING FAULTS

CODE	FAULT NAME	DIAGNOSTIC TOOL DESCRIPTION
P16F3	F_M_ESM_COMMS_FAIL_APV	fault to indicate an error on the sequence number transmitted by monitoring modulator or time between two queries has been expired.
P16F3	F_M_ESM_FC_DISABL_INJ_APV	fault to indicate function controller cannot disable injector drive
P16F3	F_M_ESM_FC_HP_DISABL_APV	fault to indicate function controller cannot disable injector drive HP drive
P16F3	F_M_ESM_HP_DRIVE_APV	A flow to indicate fault on the HP drive not operational
P0606	F_M_ESM_MEM_INT_APV	A fault raised on a memory failure
P16F3	F_M_ESM_MM_DISABL_INJ_APV	a fault to indicate monitor module cannot disable injector drive
P16F3	F_M_ESM_MM_HP_DISABL_APV	a fault to indicate monitor module cannot disable HP drive
P16F3	F_M_ESM_OUT_ENABLE_APV	a fault to indicate locking fault by monitor module
P16F3	F_M_ESM_PFC_FAIL_APV	recovery fault associated to PFC failure
P16F3	F_M_ESM_QST_TOUT_APV	recovery fault associated to answering process failure

RECOVERY MODE	
1	Engine Stops

TO CHECK	TO RECTIFY
1. Check historic faults	1. Erase faults and check again after ECU complete shut down
2. Check engine start	2. If engine starts, write I3C codes
3. ECU	3. Replace ECU

IMV CURRENT CONTROL FAULT:-

CODE	FAULT NAME	DIAGNOSTIC TOOL DESCRIPTION
P0002	IMV CURRENT CONTROL FAULT	Fault arises when the resistance trim values is not between the calibrated threshold value
P0003	IMV CURRENT FEEDBACK FAULT	Fault arises when the feedback is not within the calibrated threshold value
P0004	IMV CURRENT FEEDBACK FAULT	Fault arises when the feedback is not within the calibrated threshold value

S No	ENVIRONMENT	UNITS
1	IN _BATTERY_VOLTAGE	Volt
2	P_L_COOLANT_TEMPERATURE	deg C
3	IN_ENGINE_CYCLE_SPEED	rpm
4	RPC_IM_CRT_DMND	mA
5	IN_RAIL_PREESURE_FEEDBACK	bar
6	ICV_VEHICLE_SPEED	km/hr
7	T_D_INDICATED_TORQUE	Nm

RECOVERY MODE	
1	Disables Pilot and Post Injections (current feedback fault)
2	Disables Injector Balancing
3	turns on Check Engine lamp

TO CHECK	TO RECTIFY
1. IMV connection	1.Remove and connect again
2. Electrical wiring	2.Terminal backout, wire open circuit & short circuit
3. ECU connection	3.Connect properly
4. IMV electrical resistance on HP pump (5.3 max)	4.Change IMV
5.Check Wiring Harness Resistance	5. Change wiring harness

ECU CONNECTIONS
X

INJECTOR CORRECTION

CODE	FAULT NAME	DIAGNOSTIC TOOL DESCRIPTION
P268C	C2I data fault	Incorrect or No I2C / I3C written on 1st Cylinder
P268E	C2I data fault	Incorrect or No I2C / I3C written on 3rd Cylinder
P268F	C2I data fault	Incorrect or No I2C / I3C written on 4th Cylinder
P268D	C2I data fault	Incorrect or No I2C / I3C written on 2nd Cylinder

S No	ENVIRONMENT	UNITS
1	IN_BATTERY_VOLTAGE	V
2	P_L_COOLANT_TEMPERATURE	deg C
3	IN_ENGINE_CYCLE_SPEED	rpm
4	IN_IGNITION_SWITCH	on/off
5	IN_RAIL_PRESSURE_FEEDBACK	bar
6	SMC_ENGINE_STATE	SMC_STOPPED,SMC_CRANKING,SMC_RUNNING,SMC_STALLING.
7	RPC_IM_CRT_DMND	Ma
8	P_L_RAIL_PRES_RAW	bar

RECOVERY MODE	
Turns on CE Lamp	
Activates Increased idle group	

TO CHECK	TO RECTIFY
Read I2C / I3C from ECU	Enter correct I2C / I3C values

INLET AIR TEMPERATURE FAULT : -

CODE	FAULT NAME	DIAGNOSTIC TOOL DESCRIPTION
P0112	INLET AIR TEMPERATURE SIGNAL - LOW	Inlet air temperature signal falls below a calibrated value
P0113	INLET AIR TEMPERATURE SIGNAL - HIGH	Inlet air temperature signal falls above a calibrated value

S No	ENVIRONMENT	UNITS
1	IN_AMF_FEEDBACK	mg/str
2	IN_BATTERY_VOLTAGE	Volt
3	P_L_COOLANT_TEMPERATURE	deg C
4	IN_ENGINE_CYCLE_SPEED	rpm
5	ICV_VEHICLE_SPEED	km/hr
6	T_D_INDICATED_TORQUE	Nm
7	P_L_VEXT1_RAW	V
8	P_L_INLET_AIR_TEMP_RAW	deg C

RECOVERY MODE	
1	Disables EGR
2	Turns MIL(Malfunction Indication Lamp) ON
3	Disables SPC

TO CHECK	TO RECTIFY
1.AMF Sensor connection	1.Remove and connect again.
2.Electrical wiring.	2.Terminal backout, wire open circuit & short circuit.
3.ECU connection.	3.Connect properly.
4.AMF sensor malfunctioning .	4.Change sensor.

ECU CONNECTIONS

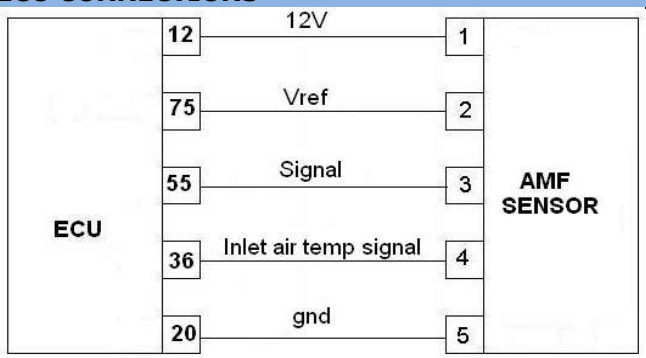

NON VOLATILE MEMORY FAULTS

CODE	FAULT NAME	DIAGNOSTIC TOOL DESCRIPTION
P1614	Nonvolatile memory fault	I3C & MDP
P1615	Nonvolatile memory fault	RPC,PL,STE
P1616	Nonvolatile memory fault	
P1606	Nonvolatile memory fault	ATC,PL CC,PL CDS
P1617	Nonvolatile memory fault	SMC
P1620	Nonvolatile memory fault	ICV,INJ CNT
P1621	Nonvolatile memory fault	FM
P1622	Nonvolatile memory fault	APP

S No	ENVIRONMENT	UNITS
1	IN_BATTERY_VOLTAGE	V
2	IN_BOOST_PRESSURE	bar
3	P_L_COOLANT_TEMPERATURE	deg C
4	IN_ENGINE_CYCLE_SPEED	rpm
5	IN_IGNITION_SWITCH	on/off
6	SMC_ENGINE_STATE	km/hr
7	T_D_INDICATED _TORQUE	Nm

RECOVERY MODE	
1	Engine stops.

TO CHECK	TO RECTIFY

ECU MEMORY INTEGRITY FAULT

CODE	FAULT NAME	DIAGNOSTIC TOOL DESCRIPTION
P0603	ECU memory integrity fault-Code integrity	Memory failure - in the coding region of the ECU.
P0604	ECU memory integrity fault-Calibration integrity	Memory failure - in the calibration region of the ECU.
P0605	ECU memory integrity fault-RAM integrity	Memory failure - in the RAM region of the ECU.

S No	ENVIRONMENT	UNITS
1	IN_BATTERY_VOLTAGE	Volt
2	IN_BOOST_PRESSURE	Bar
3	P_L_COOLANT_TEMPERATURE	deg C
4	IN_ENGINE_CYCLE_SPEED	Rpm
5	IN_IGNITION_SWITCH	OFF,ON
6	ICV_VEHICLE_SPEED	Km/hr
7	SMC_ENGINE_STATE	SMC_STOPPED,SMC_CRANKING,SMC_RUNNING,SMC_STALLING.
8	T_D_INDICATED_TORQUE	Nm

RECOVERY MODE	
1	Turns on CE Lamp
2	Engine Stops

TO CHECK	TO RECTIFY
Conformity of ground connection	1. Correct Electrical Problem 2. Replace ECU

AIR CONDITIONER DRIVE FAULT

CODE	FAULT NAME	DIAGNOSTIC TOOL DESCRIPTION
P1646	AIR CONDITIONER DRIVE FAULT	Fault in AC Relay connection open circuit
P0647	AIR CONDITIONER DRIVE FAULT	Fault in AC Relay connection short circuit
P0646	AIR CONDITIONER DRIVE FAULT	Fault in AC Relay connection short circuit to ground

S No	ENVIRONMENT	UNITS
1	IN_BATTERY_VOLTAGE	Volt
2	IN_BOOST_PRESSURE	Bar
3	P_L_COOLANT_TEMPERATURE	deg C
4	IN_ENGINE_CYCLE_SPEED	Rpm
5	ICV_VEHICLE_SPEED	Km/hr
6	SMC_ENGINE_STATE	SMC_STOPPED,SMC_CRANKING, SMC_RUNNING,SMC_STALLING.
7	T_D_INDICATED_TORQUE	Nm

RECOVERY MODE	
1	AC Off

TO CHECK	TO RECTIFY
Check relay connection	remove and connect again
Check ECU conenction	connect properly
Wiring harness continuity	Terminal back out, OC / SC. Replace Wiring harness
Relay	Change relay

ECU CONNECTIONS

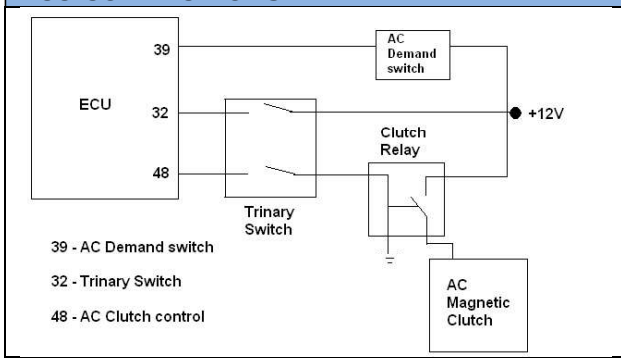

IM CTRL TRIM FAULT

CODE	FAULT NAME	DIAGNOSTIC TOOL DESCRIPTION
P1256	F_M_IM_CTRL_TRIM_FLT	Fuel LO / Trim LO
P1257	F_M_IM_CTRL_TRIM_FLT	Fuel LO/ Trim HI
P1258	F_M_IM_CTRL_TRIM_FLT	Fuel HI / Trim LO
P1259	F_M_IM_CTRL_TRIM_FLT	Fuel HI / Trim HI

S No	ENVIRONMENT	UNITS
1	IN_BATTERY_VOLTAGE	V
2	P_L_COOLANT_TEMPERATURE	deg C
3	IN_ENGINE_CYCLE_SPEED	rpm
4	IN_RAIL_PRESSURE_FEEDBACK	bar
5	ICV_VEHICLE_SPEED	kM/hr
6	T_D_INDICATED_TORQUE	NM
7	RPC_IM_CRT_DMND	mA

RECOVERY MODE	
1	Turns on check engine lamp
2	Disables RVD from the Injector 0,1,2,3.
3	Disables Cylinder Balancing Strategy (F_M_INJ_BAL_SPD_GRP_FLT)
4	Activates Reduced Torque group 2.

TO CHECK	TO RECTIFY
Check for IMV related Fault Codes	Rectify IMV related Fault
Check for Low pressure system	Rectify if any abnormalities noticed
Check air entry in the low pressure system	If noticed correct the Low pressure system with absence of air(air bubble).

ECU CONNECTIONS

ECO SWITCH STUCK FAULT

CODE	FAULT NAME	DIAGNOSTIC TOOL DESCRIPTION
P3013	F_M_ECO_SW_STUCK	ECO switch stuck fault

S No	ENVIRONMENT	UNITS
1	IN_BATTERY_VOLTAGE	V
2	P_L_COOLANT_TEMPERATURE	deg C
3	IN_ENGINE_CYCLE_SPEED	rpm
4	IN_RAIL_PRESSURE_FEEDBACK	bar
5	ICV_VEHICLE_SPEED	kM/hr
6	T_D_INDICATED_TORQUE	NM
7	RPC_IM_CRT_DMND	mA

RECOVERY MODE	
1	CE lamp turns ON.
2	Normal driving mode is activated.

TO CHECK	TO RECTIFY
Check the ECO switch working	Rectify or replace switch
Check wiring harness.	Rectify the wiring harness issue.

ECU CONNECTIONS

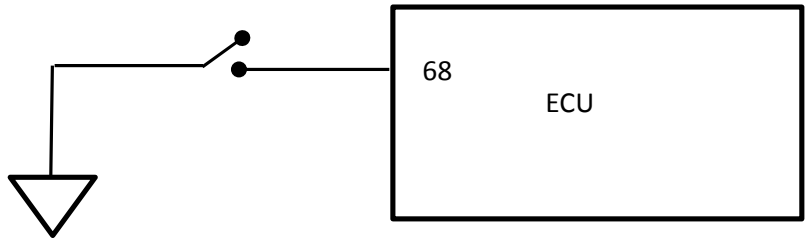

DIAGONSTIC PROCEDURE FOR MDP NO UPDATE FAULTS:

FAULT CODES: P029C, P02A4, P02A8, P02A0

1. Read and save all the required information (vehicle, fault, etc.,) using I_comet (V2 and avove) such as MDP parameters.
2. Read I3C value displayed in the I_Comet and physically checks with the I3C available on the injectors.
3. **Write the I3C value again and switch off and remove the ignition key and wait for 2 mins.**
4. Read the Clutch switch state without pressing the clutch pedal _ state should be **in_clutch_engaged.**
5. Press the clutch pedal 100% read the clutch switch state- state should be **in_clutch_disengaged**.
6. Take the vehicle to highway.
7. Warm up the vehicle upto 80 deg coolant temperature.
8. Run the vehicle 4th gear maximum 60Kmph and foot off the accelerator pedal, wait till the vehicle speed reaches 35Kmp speed during the process don't press brake and clutch pedal.
9. Repeat the step No-5 for 20 times.
10. Switch off the vehicle (remove the key from vehicle) wait for 30 sec.
11. Start the vehicle look for service lamp ON or Not.
12. If the service lamp ON and repeat the step No-5 again 20 times, and follow step no 7 & 8.
13. If the service lamp OFF after starting the vehicle .Erase the fault code from historic and handoverthe vehicle to dealer.

NON DETECTABLE FAULTS BY ECU

Engine knocking	
Possible Reason	Check
Check C2I/C3I	Read cylinder to cylinder
Coolant temperature Sensor Drift	Measure ambient value
Rail Pressure Sensor Drift	Read Value of Rail Pressure while cranking
Air Flow Sensor Drift	Read air flow and compare with nominal
EGR Valve Stuck open or closed	Check vacuum circuit, Check SV breather, Valve seized or broken
Injector return circuit	Condition of hoses and Condition of venture
Preheating Resistors	Condition of PPH harness, PPH unit logic, condition of plugs
Engine Compression	Known Method
Incorrect injector	Injector is wrong/ engine, sealing washer on cylinder head
Injector problem	Injector clogged, needle stuck

Black Smoke	
Possible Reason	Check
Check C2I/C3I	C2I/C3I is correct, Consistency of cylinder allocation/no
Coolant temperature sensor Drift	Read value of coolant temperature
Rail Pressure Sensor Drift	Read value of rail pressure
Air inlet circuit	Flow meter, Air filter, Line is sealed, operation of air throttle(if present)
EGR circuit	Vacuum circuit connection is correct, SV breather, condition of valve, operation of air throttle (if present)
Exhaust gas circuit	"town" type driving , Downpipe, Particle filter clogged, Catalytic converter Clogged
Injector leaking	Check with high pressure diagnostic tool

Blue and White smoke	
Possible Reason	Check
Check fuel	Presence of Water in filter, fuel is correct, unsuitable additive
Check engine	Coolant consumption, Oil level(too high), Oil vapour circuit, Turbo bearings, Injector Fastening, Cylinder compression, IH/ cylinder head sealing washer
Air inlet circuit	Flow meter, Air filter, Line is sealed, Operation of air throttle (if present)

Exhaust Circuit	Catalytic convertor clogged
Check PPH circuit	control unit, plugs

Engine Does not Start	
Possible Reason	Check
Check immobiliser function	Immobiliser and ECU function, Diagnostic
Out of fuel	Presence of Fuel in Tank/Sender/Priming bulb, Sender Operation, Fuel is correct
Battery	Check Battery Voltage
Fuel Quality	Pump supply hoses split, Fuel filter seal/ clogged, LP connection inverted, Incorrect Fuel Filter,(part no.), Air leak in LP circuit, Pump return circuit blocked, Tank seals/Breather
Overload flow	Value configured in ECU
Presence of a large HP leak	Check visually, smell
ECU power supply	Fuse, Relays and ECU earths
Air inlet circuit	Flow meter, Air filter, Line is sealed, Operation of air throttle (if present)
Exhaust circuit	Exhaust outlet, Catalytic Convertor released, Catalytic Convertor Clogged
C2I	Cylinder by Cylinder
Coolant temperature sensor drift	Measurement of Ambient Value
Rail pressure sensor drift	Read value of Rail pressure while cranking
Cam and crank missing signals	Cam signal is correct, Crank signal is correct
IMV blocked	IMV
Fuel Quality	Check for the presence of water , Contamination
Intermittent Wiring Fault	Connector wire test
Preheating resistors	PPH unit logic
Engine Compression	Known Method
Transfer pump	Measurement of Pump Return Flow
HP pump	Check with closed rail pressure with High pressure diagnostic tool
Injector backleak	Check with High pressure diagnostic tool

Engine Does not stop	
Possible Reason	Check
Wiring Harness	Key information to ECU is correct, check short circuit for positive on this line

Check engine oil	Oil grade, Oil level is correct, Oil Diluted by fuel, Condition of Oil vapour recycling circuit, Condition of Turbo bearings

Engine Overheating	
Possible Reason	Check
Check fuel circuit	Fuel quality, Diesel is correct, Take sample
Check mechanical and electrical consumers	Alternator charge, Air con compressor, Automatic transmission, Power steering
Coolant temperature sensor drift	Consistency of Ambient value, check sensor circuit(resistance,connector,continuity), Bleeding control circuit
Check Exhaust circuit	Exhaust outlet, Catalytic Converter "released", Catalytic Converter Clogged
Preheater plug circuit	Plug supply is correct
EGR circuit	Vacuum Circuit Connection, SV breather, Valve seized or broken
Engine	Coolant consumption, Oil level, Oil vapour circuit, Turbo bearings, Injector Fastening, Cylinder Compression, IH/Cylinder Head sealing washer

Unsteady Idle	
Possible Reason	Check
Check fuel circuit	Presence of Fuel in Tank, /Sender/Priming Bulb, Sender Operation, and Fuel is correct.
Check mechanical and electrical consumers	Alternator charge, Air con compressor, Automatic Transmission, Power Steering
Battery	Battery Voltage
Check fuel supply circuit	IH return circuit is correct, Pump Supply hoses split or air intake, Fuel Filter seal or clogged, LP fuel circuit blocked, air leak in LP circuit, pump return circuit blocked, tanks seats or breather.
Presence of a large HP leak	Check visually or through smell
Harness not correct	Relays, ECU earth corroded, wiring
Air inlet circuit	Air filter, Line, Operation of air throttle(if present)

Exhaust circuit	Exhaust outlet, catalytic convertor "released", catalytic convertor clogged
C2I	Cylinder by Cylinder
Pre heating plug circuit	Plugs are correct
Rail Pressure Sensor drift	Read Rail pressure value
EGR circuit	Vacuum Circuit Connection, SV breather, Valve seized or broken
Intermittent wiring fault	Connector, Wire test
Engine compression	Run compression tester, Known Method
Injector problem	Injector mounting, Injector Clogged, Needle Stuck

Lack of Power	
Possible Reason	Check
Vehicle	Tyres are right, accessories(roof and rack), handbrake, equipment
C2I	Cylinder by Cylinder
Pedal sensor fault	Sensor mounting, Sensor Movement, Consistency of pedal signal
Check Mechanical and Electrical consumers	Alternator charge, Air con compressor, Automatic Transmission, Power Steering
Sensor Drift	Flow meter value, Turbo charging pressure, Pedal setting
Fuel supply	Pump supply hoses split or air intake, fuel filter seal or clogged, LP fuel circuit blocked, air leak in LP circuit, pump return circuit blocked, tanks seats or breather.
Presence of a large HP leak	Check visually or through smell
EGR circuit	Vacuum circuit connection, SV breather, valve seized or broken
Air inlet circuit	Altitude, Condition of Turbo, Leak Downstream of Turbo, Air filter, Check line, Operation of air throttle(if present)
Oil level	Oil level too high
Exhaust circuit	Exhaust outlet, catalytic converter "released", blocked
Engine compression	Run Compression tester, Known Method
Injector problem	Injector Clogged, Needle stuck

High Fuel Consumption	
Possible Reason	Check
Vehicle	Tyres are correct, Accessories, (roof and rack) , Handbrake, Equipment

C2I	Cylinder by Cylinder
Check Mechanical and Electrical consumers	Alternator charge, Air con compressor, Automatic Transmission, Power Steering
Fuel supply circuit	IH return hoses split, Pump Return circuit Split
Quality of fuel	Fuel is correct, take a sample.
Presence of Leak	By visual inspection, or through smell
EGR circuit	Vacuum circuit connection, SV breather, Valve seized or broken
Air inlet circuit	Altitude, condition of turbo, leak downstream of turbo, air filter, check line, operation of air throttle(if present)
Oil level	Oil level too high
Exhaust circuit	Exhaust outlet, catalytic converter "released", catalytic converter clogged
Engine compression	Run Compression Tester, Known method
Injector problem	Injector clogged, Needle stuck

Difficulty Start when Warm	
Possible Reason	Check
Fuel circuit	Presence of Fuel in tank, /Sender/Priming bulb, Sender operation, Fuel is correct.
Check Starter/battery	Battery voltage
Check fuel supply circuit	IH return circuit is correct, pump supply hoses split or air intake, fuel filter seal or clogged, LP fuel circuit blocked, air leak in LP circuit, pump return circuit blocked, tanks seats or breather.
Presence of Leak	By Visual Inspection, or through smell
Power Supply	Relays, ECU earths corroded
Air inlet circuit	Air Filter, Line, Operation of Air throttle(if present)
Exhaust circuit	Exhaust outlet, Catalytic Converter "released", Catalytic Converter Clogged
C2I	Cylinder by Cylinder
Rail pressure sensor drift	Read value of Rail Pressure while cranking
EGR circuit	Vacuum Circuit Connection, SV breather, Valve seized or broken
IMV partially blocked	Rail pressure while cranking, IMV
Intermittent wiring fault	connector, wire test
Engine compression	Run Compression Test, known method
Injector problem	Injector Clogged, Needle Stuck

HIGH PRESSURE DIAGNOSTICS

OBJECTIVE

- To analyse the hydraulic system status of common rail fie components
- To understand and differentiate the problem associated with pressure production, regulation and consumption

TESTS

1. INJECTOR

a. Static Leak test - Vehicle not starting or difficult to start condition

b. Dynamic Leak test - Vehicle in starting condition but lack of power and stalls while running

2. CR PUMP

a. Closed Rail Test - Vehicle not starting condition

PROCEDURE

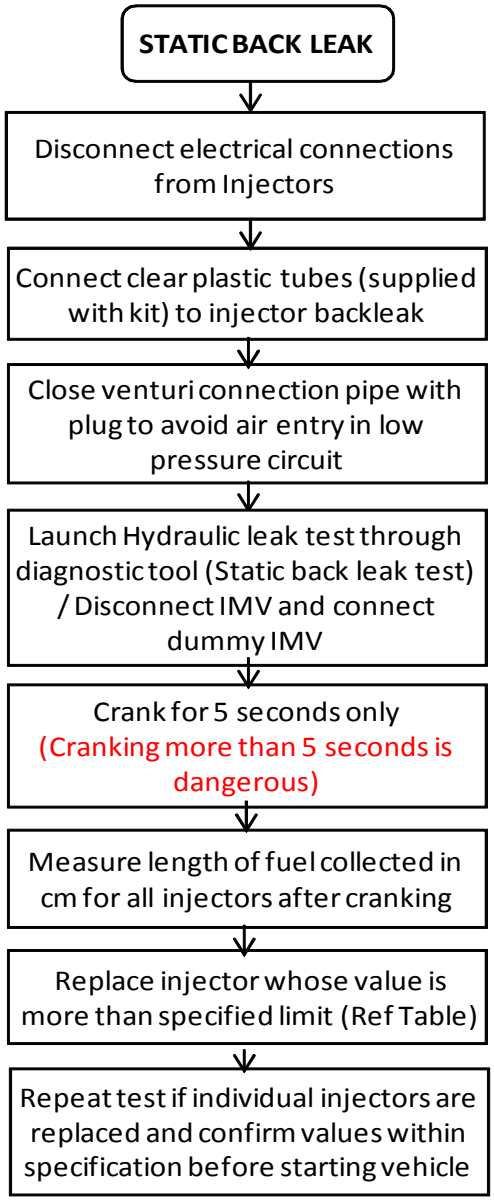

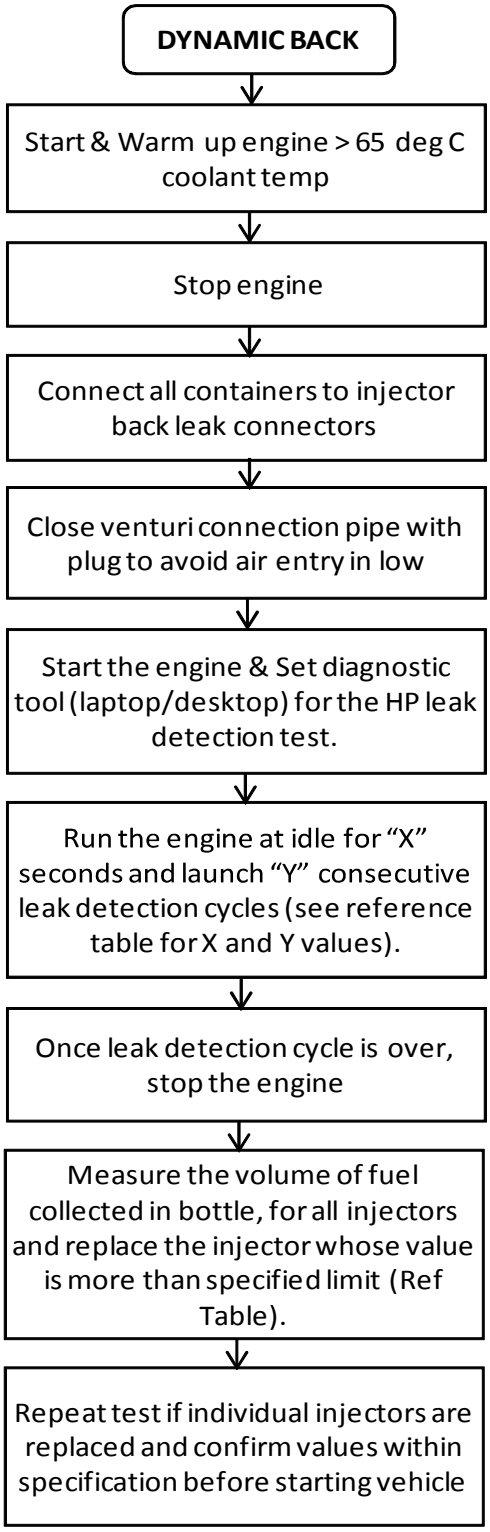
DYNAMIC BACK
Start & Warm up engine > 65 deg C coolant temp
Stop engine
Connect all containers to injector back leak connectors
Close venturi connection pipe with plug to avoid air entry in low
Start the engine & Set diagnostic tool (laptop/desktop) for the HP leak detection test.
Run the engine at idle for "X" seconds and launch "Y" consecutive leak detection cycles (see reference table for X and Y values).
Once leak detection cycle is over, stop the engine
Measure the volume of fuel collected in bottle, for all injectors and replace the injector whose value is more than specified limit (Ref Table).
Repeat test if individual injectors are replaced and confirm values within specification before starting vehicle

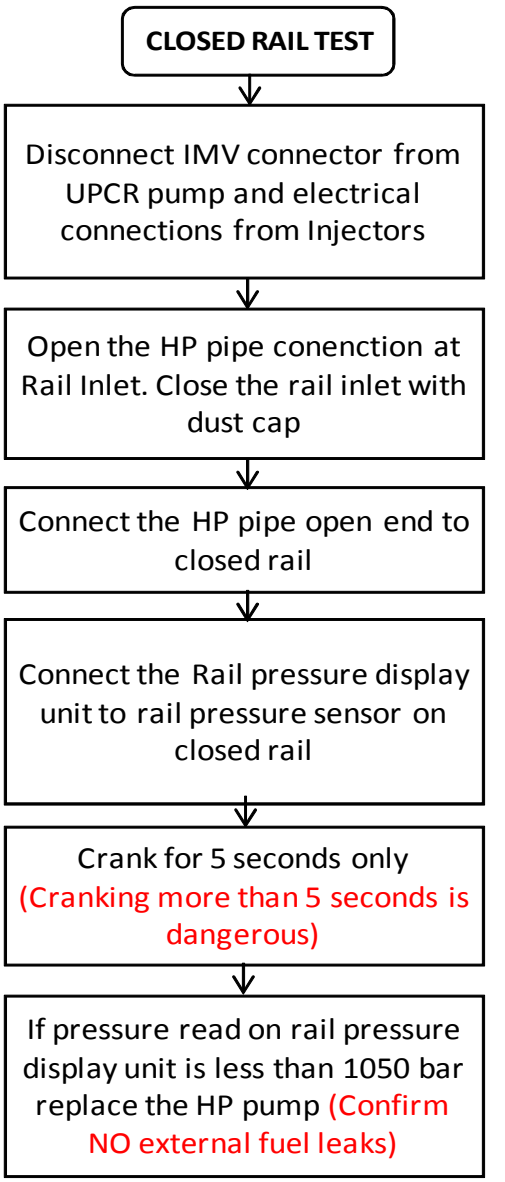

INJECTOR DIAGNOSTICS - BACKLEAK VALUES IN STATIC AND DYNAMIC CONDITION

APPLICATION	STATIC TEST		DYNAMIC TEST		
	Back Leak in Pipe (in cm)	Cranking Time	Back Leak in Container (in ml)	Idle Time	Number of Leak Detection Cycles
ABCD	20 cm	5 s	50 ml	30 s	1 Cycle (consisting of 4 ramps up routines)

COMPRESSION TEST

DESCRIPTION:-

When the "Test start button" is pressed and ECU responds for the START TEST authorization (Battery Voltage should be more than 12 V and cranking RPM is more than 160 and less than 800) by indicating TEST LAUNCHED followed by TEST IN PROGRESS.

OBJECTIVE:-

To indicate the compression leak in the cylinder's by measuring the cranking RPM.

BEFORE DOING THE TEST:-

- Ensure all the electrical connections in the vehicle are in good condition.
- Vehicle is in stopped and in neutral gear condition
- Battery voltage is more than 12V

TEST PROCEDURE:-

STEP – 1 : Ensure vehicle is in neutral gear, stopped state, electrical connections are good and battery is charged enough to crank the vehicle for collectively 2 min continuously.

STEP – 2 : Press start button and look for ECU response as TEST LAUNCHED. (If not look for the faults & battery condition) followed by CRANK THE ENGINE.

STEP – 3 : Crank the vehicle continuously for more than 6sec during this period you should be able to see Battery voltage more than 9V & Engine rpm more than 160rpm.

STEP – 4 : Stop cranking and look for STATE as TEST FINISHED.

STEP – 5 : RPM against each cylinder is the output and maximum among the cylinder is the week (less compression) cylinder.

CONDITIONS DURING THE COMPRESSION TEST:-

- Tester should manually crank the engine after seeing the response of test TEST LAUNCHED.
- Crank the vehicle for continuously for 6 - 8 sec.
- Stop cranking the vehicle and you could see the average rpm in each cylinder; and the test status would be TEST STOPPED.
- The engine won't start or is difficult to start.
- While cranking the battery voltage should not be less than 9V; if so stop doing the test.
- Cranking rpm reduces engine cylinder wise, if the test is repeated on the same vehicle continuously more than once.

PRECAUTION:-

TEST TO BE CONDUCTED IN BONNET CLOSED CONDITION.

RESULT:-

Output of the compression test is the average RPM of each cylinder; Higher difference in the respective cylinders RPM indicates compression leak & higher the RPM indicates weaker the cylinder compared to other cylinders.

If the weak compression is identified and corrected, “Compression Test” should be repeated to ensure again.

This is just an indication and TML has to take decision on improving the compression on the particular cylinder.

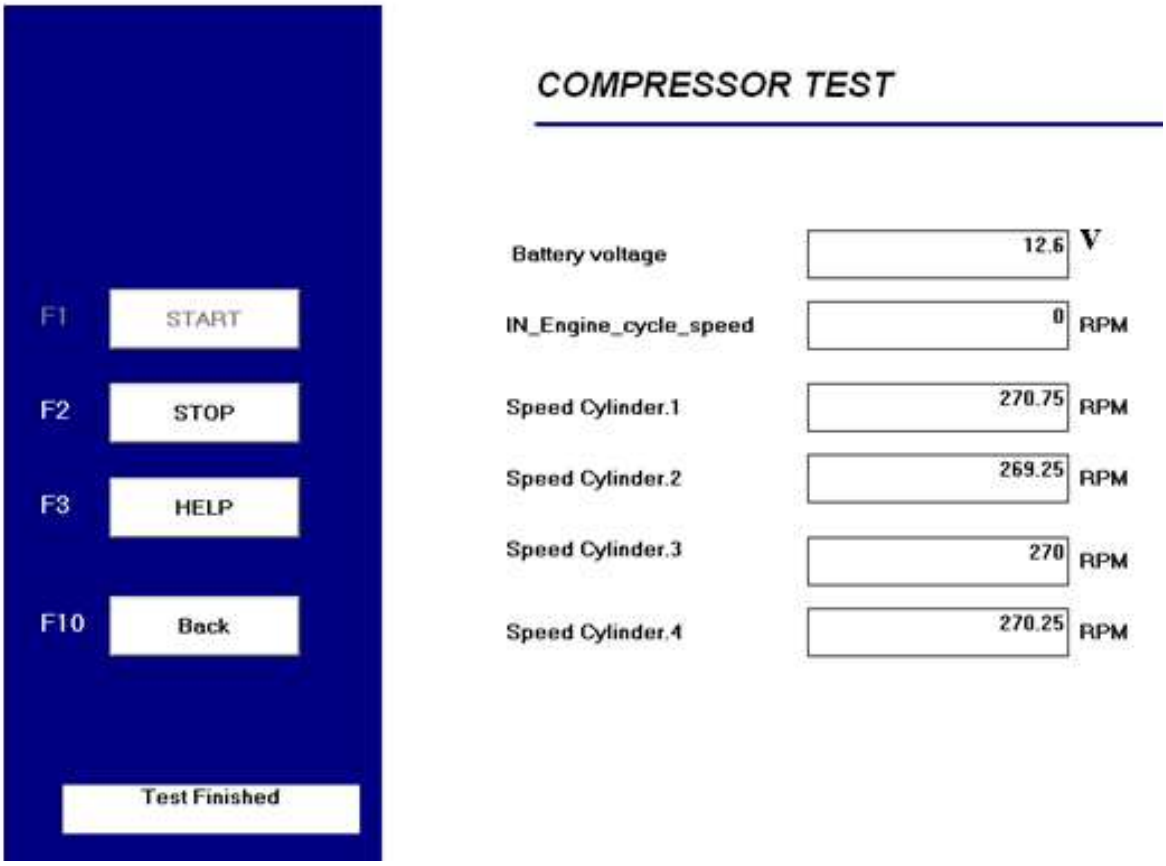

TEST PROCEDURE:-

STEP – 1: Ensure vehicle is in neutral gear, stopped state, electrical connections are good and battery is charged enough to crank the vehicle for collectively 2 min continuously.

STEP – 2: Press start button and look for ECU response as TEST LAUNCHED. (If not look for the faults & battery condition)

STEP – 3: Crank the vehicle continuously for more than 6sec during this period you should be able to see Battery voltage more than 9V & Engine rpm more than 160rpm.

STEP – 4: Stop cranking and look for STATE as TEST FINISHED.

STEP – 5: RPM against each cylinder is the output and maximum among the cylinder is the week (less compression) cylinder.

DO'S AND DON'TS FOR CR SYSTEM

DO'S: -

1. If engine does not start check the respective fuses related to CR components.
2. If engine does not start and if engine check lamp glow call Delphi Service Support.
3. Call Delphi Service support if there is a fault detected by the Diagnostic Tool.
4. Precaution: - When Injectors are replaced/Changed Injector I3C values must be loaded correctly as per cylinder order.
5. Precaution: - When Injectors are removed and same injectors refitted, the injectors should be fitted as per the same original order or else I3C values to be reentered in the ECU.
6. Follow recommended cleanliness procedure given in Work Shop manual before removal of any Common Rail System Components. This is to prevent dust entry in the system and to avoid damage.
7. Plug the port of Common rail system components whenever any pipe connections are removed.
8. If the fuel tank is dry (no diesel) fill diesel and use priming pump to suck the diesel till fuel filter.
9. Tighten the mounting nuts / cap nuts etc. only to the specified torque values.
10. Always remove the Injectors before dismantling the cylinder head. This to avoid damage to the injector nozzle tips which protrude out of cylinder head.
11. In case of HP pump removal handle the pump with proper care to avoid any damage to inlet pipe, leak-off pipe and connectors.

DON'TS: -

1. Do not run the vehicle with 'Engine Check' lamp ON.
2. Do not remove the connectors from the sensors unnecessarily.
3. Do not remove battery connection when the key is **"ON"**. ECU may get damaged.
4. Do not remove back-leak pipes unless the Injectors have to be removed.
5. Do not remove HP pipes unnecessarily.
6. **Do not** bleed the air by removing or loosening the HP pipes.
7. **Do not push the vehicle and start if the battery voltage is low.** The ECU gets tripped if the battery voltage is below 6 volts. Replace the battery and then start the engine.
8. **Do not reuse the HP pipes**.
9. Do not apply force or bend the HP pipes while fitment. Follow the fitment procedure.
10. Do not remove the rail unnecessarily. The rail can perform maximum 10 assembly / disassembly cycles of pipes without any damage.
11. Do not bleed air in the fuel lines by removing any low pressure lines or high pressure lines.
12. Do not clean the Injectors with pressurized water. The injector is not designed to be washed with pressurised water.
13. Do not clean the HP pipes with compressed air, oil or water. Cleaning is adding dirt in HP pipes and CR system.
14. Do not handle CR components by hydraulic connectors and sensor mounting connectors and tubes.
15. Do not use any fallen/ broken water sedimenters / fuel filters, even if there's no external sign of damage. Fallen / broken parts are not to be used for any purpose.