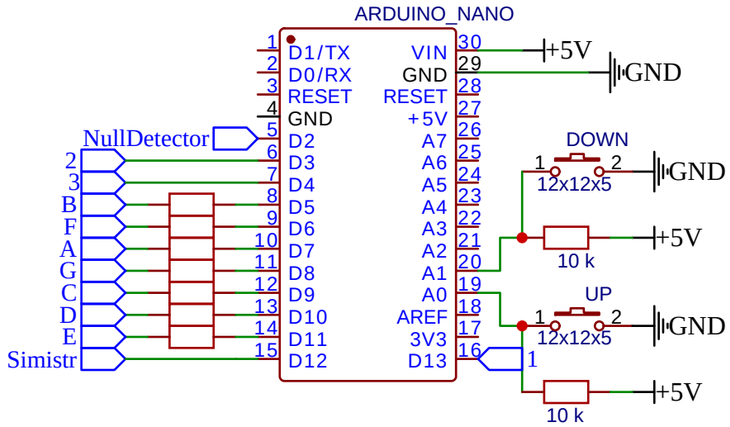

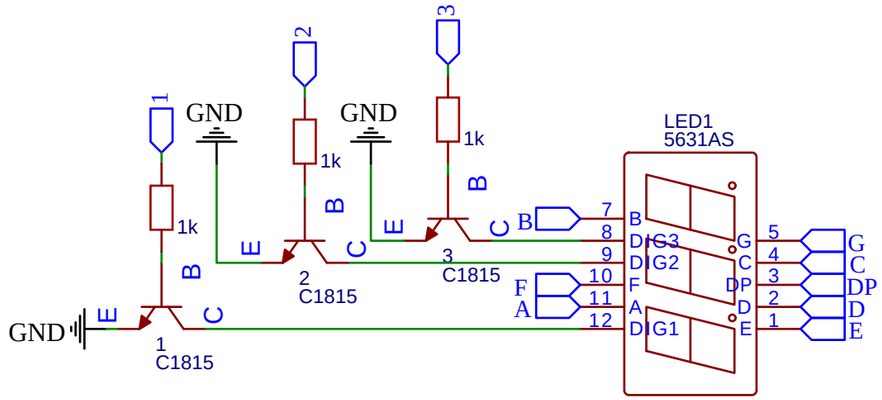

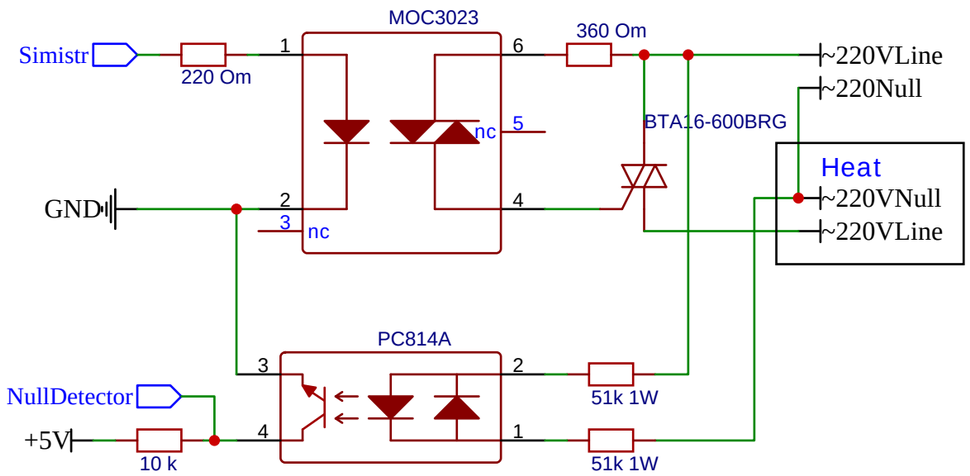

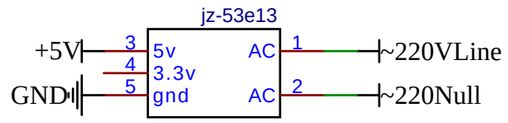

TITLE: Power regulator	REV: 1.0
Company: Lagom4	Sheet: 1/1
Date: 2023-01-24 Drawn By: savelkayamil5	