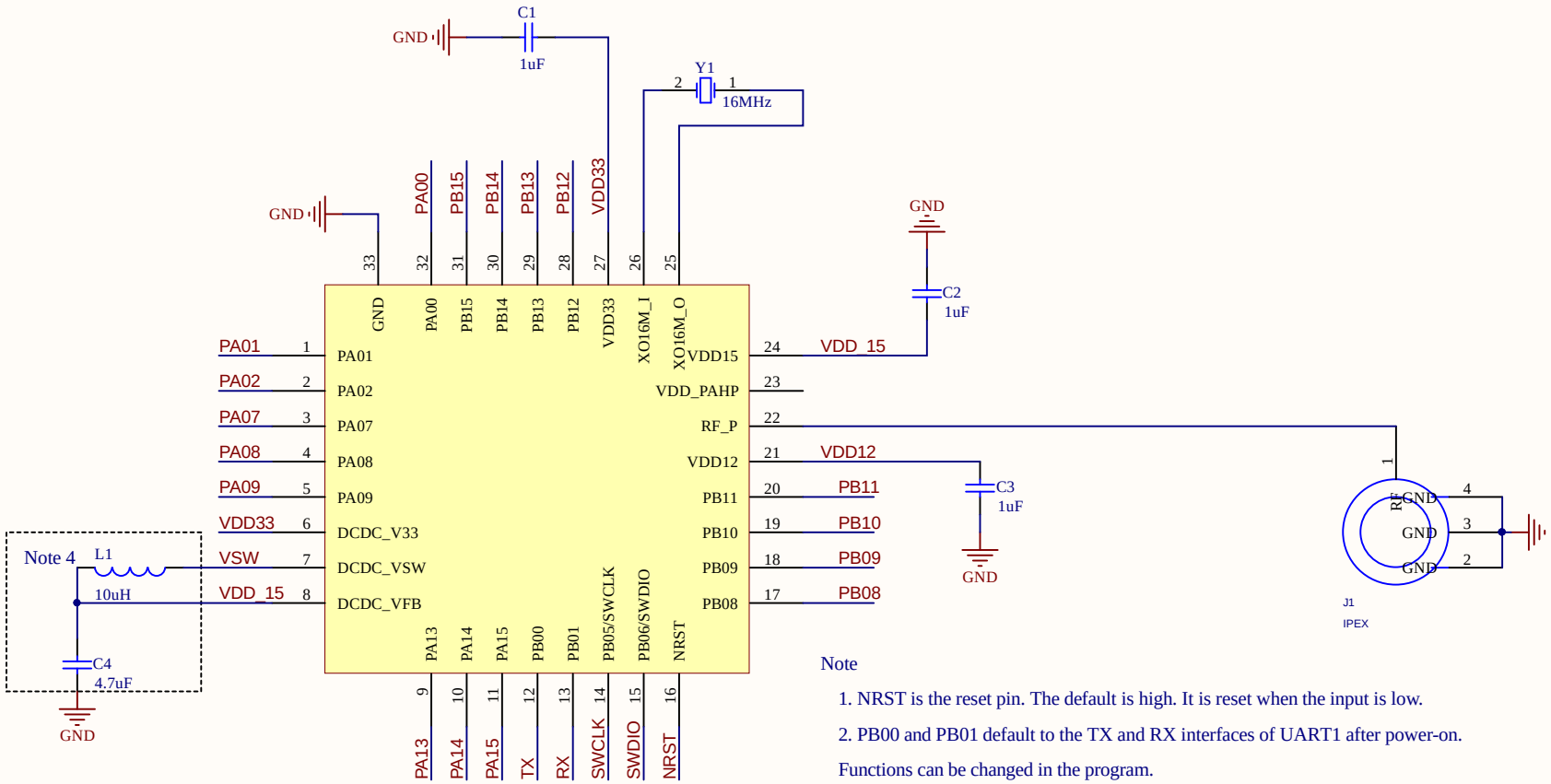

Note

1. NRST is the reset pin. The default is high. It is reset when the input is low.
2. PB00 and PB01 default to the TX and RX interfaces of UART1 after power-on. Functions can be changed in the program.
3. TX and RX interfaces of UART1 are default after PB00 and PB01 are electrified, and the functions can be changed in the program
4. If DCDC is not used to reduce power consumption, replace L1 with 0 ohm resistor, C4 capacitor can be omitted
5. When using TX power above 10dBm, a 1uF capacitor must be added around VDD_PAHP.

Title	LE5010_SIMPLE_SCH	
Size A4	Number 1	Revision v0.4
Date: 2020/4/8	Sheet of	
File: D:\work_file\..\LE5010_QFN32_EN.SchDoc	Drawn By: xwcai	