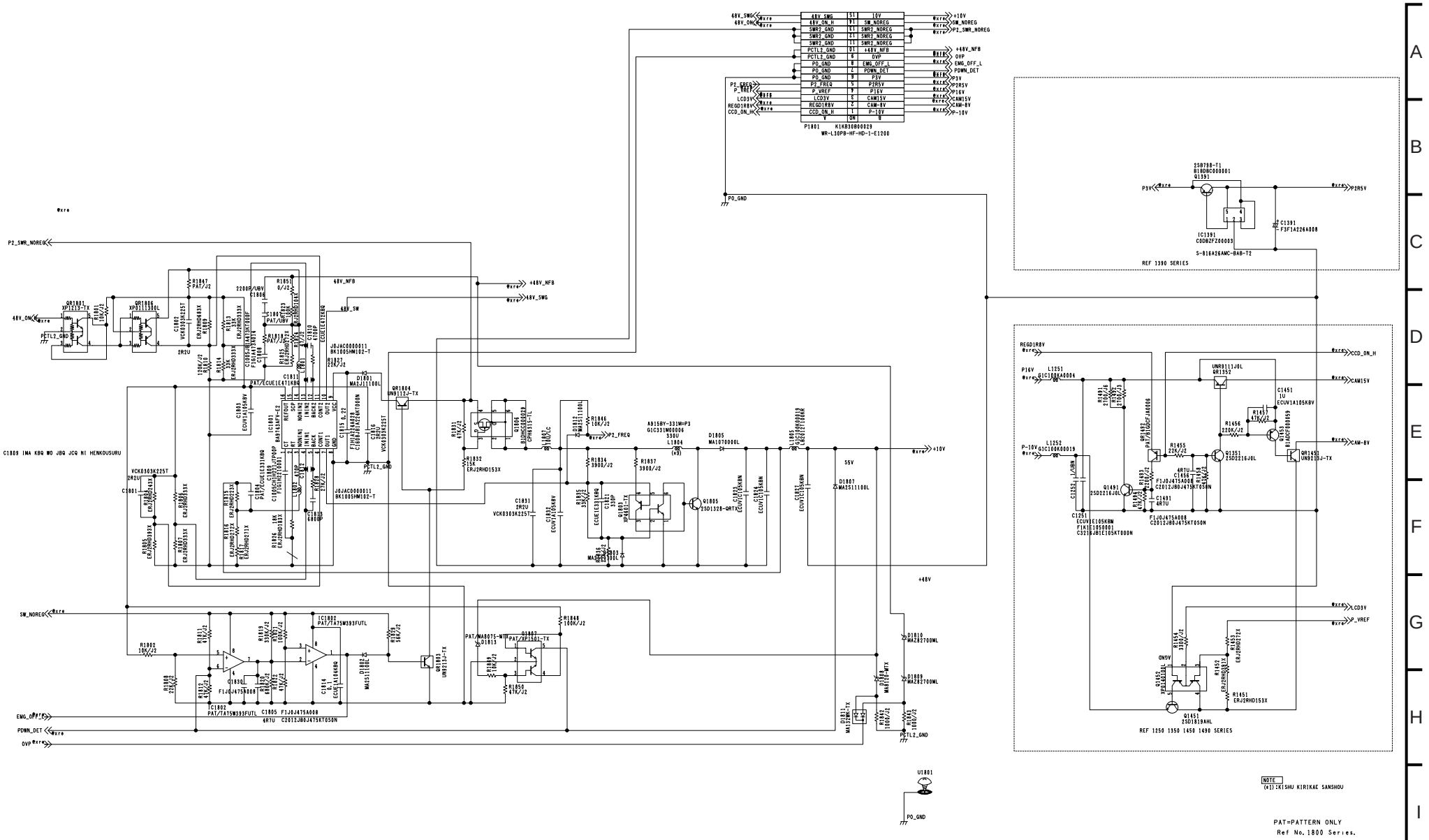


| COMPONENT NAME | POWER 2 | 01/01 |
|---|---|---|
| CIRCUIT BOARD NO. | | DRAWING NO. |
| VEP01922A | | KR1F94 (1/1) (0) |
| | | SCM017 |