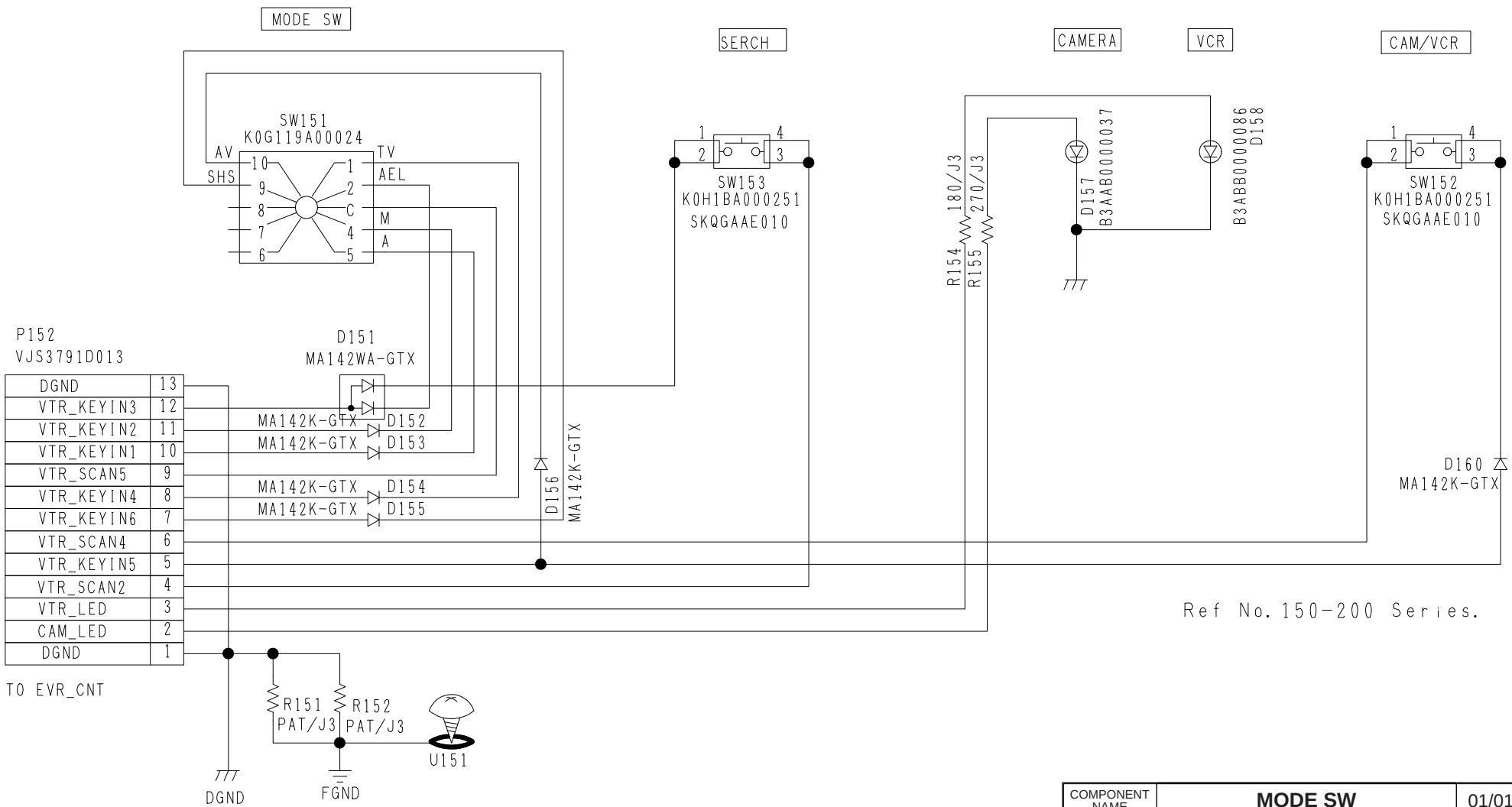


| COMPONENT NAME | MODE SW | 01/01 |
|---|---|---|
| CIRCUIT BOARD NO. | DRAWING NO. | |
| VEP06E89B | KR6V40 (1/1) (0) | |
| | SCM041 | |