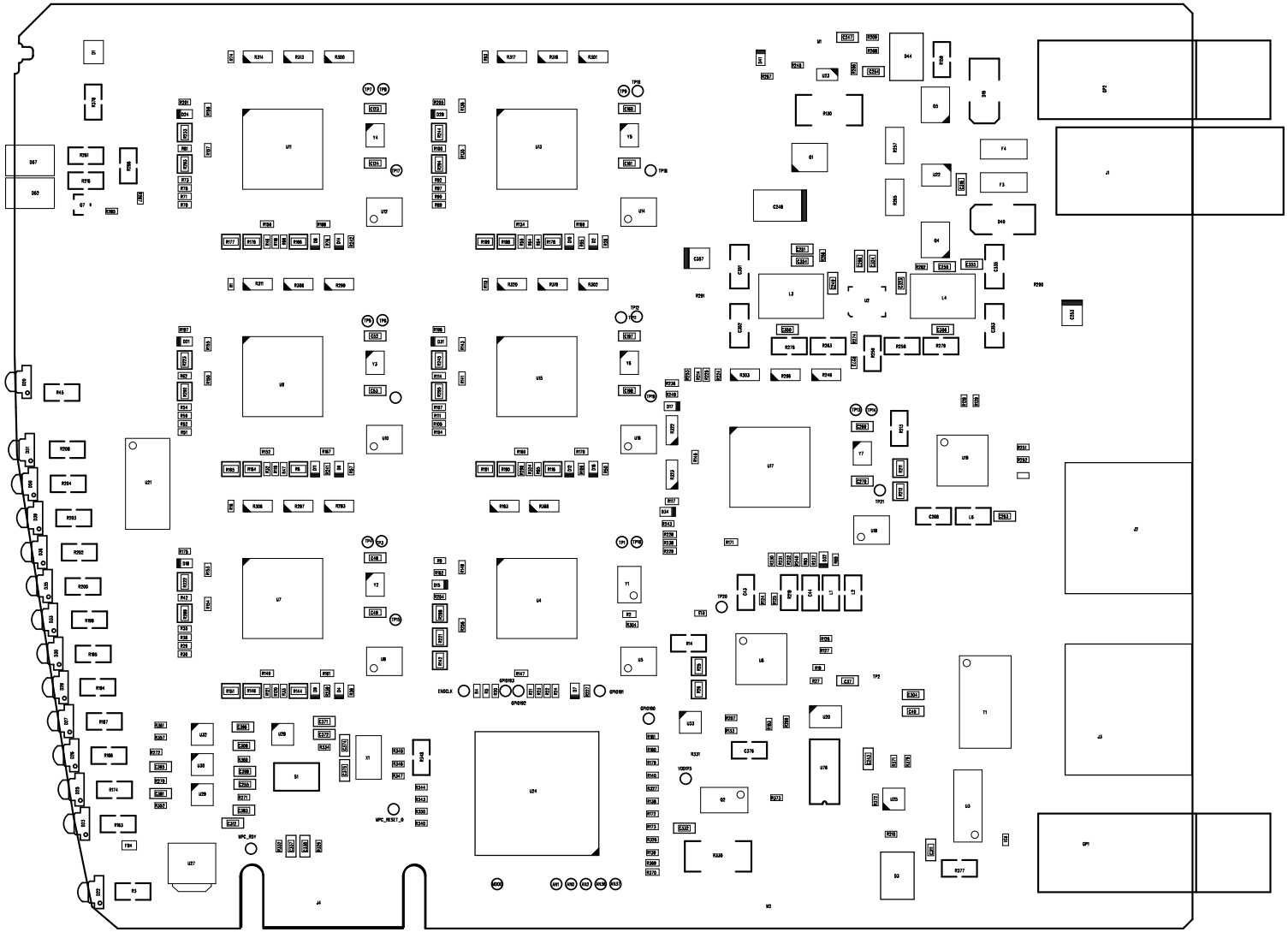

IES-NGP_Rev-A.pcb - Fri Nov 23 11:45:21 2012