REVISIONS			
REV	DESCRIPTION	DATE	APPROVED
A		4/10/00	Tom Stoll

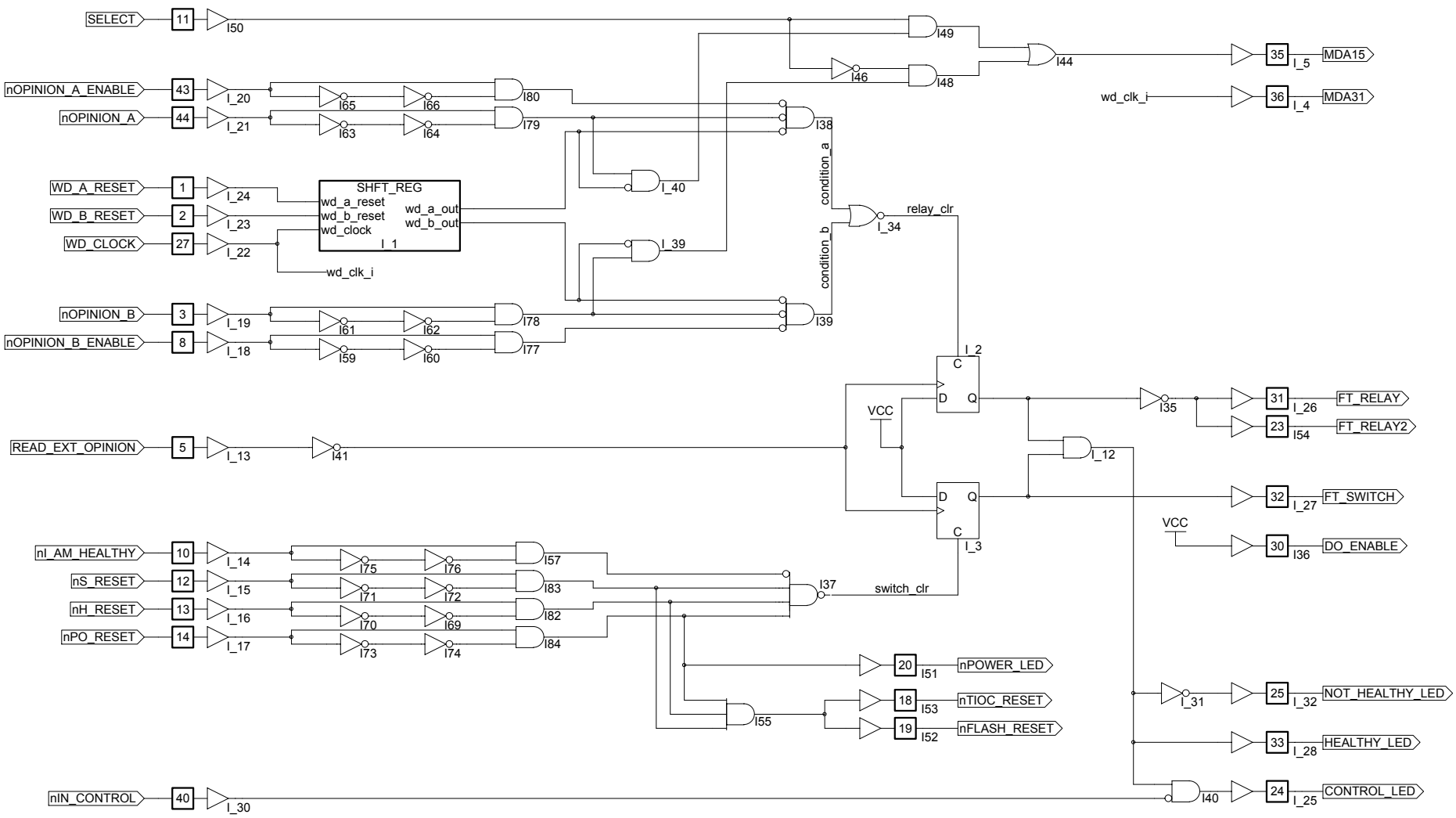

Rev. B - Remove PO_Reset Delay 08/21/01
Rev. C - Change DO_ENABLE connection from FT_SWITCH to VCC 10/15/02
Rev. D - Add FT_RELAY2 for current, Reset outputs, and glitch filters on inputs 01/05/05

APPROVALS:	DATE	Compressor Controls Corporation 11359 Aurora Ave. - Des Moines, IA 50322	
DRAWN Tom Stoll	7/22/99	IOC-555 Rev. C Healthy Control PLD Main Logic	
CHECKED		TARGET REF. DES. U43	DWG NO XX-XXXXXX-XXX
ENGINEER Tom Stoll	4/10/00	FILE HL_U43D	Sheet 1 of 2