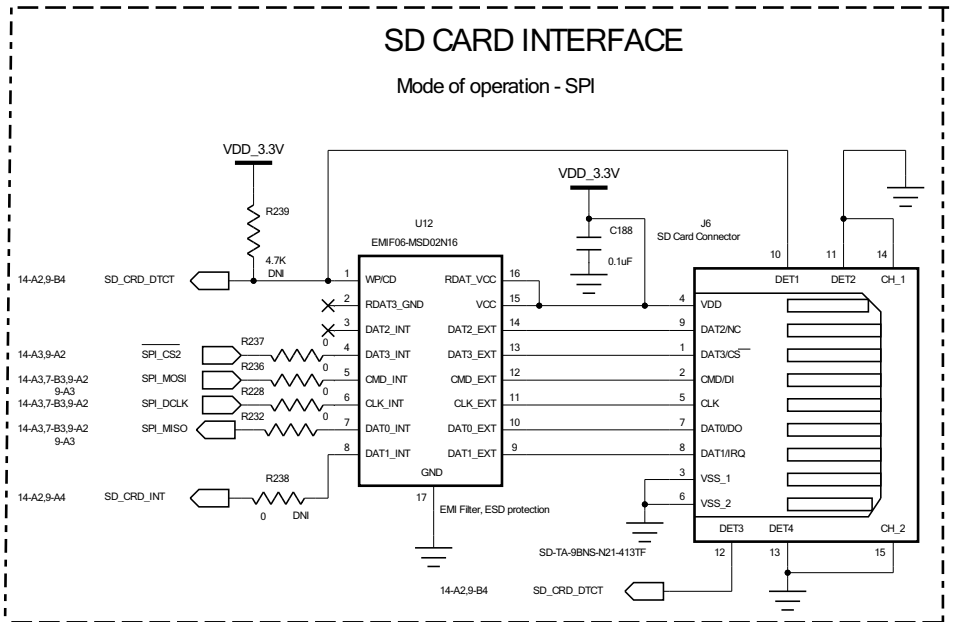

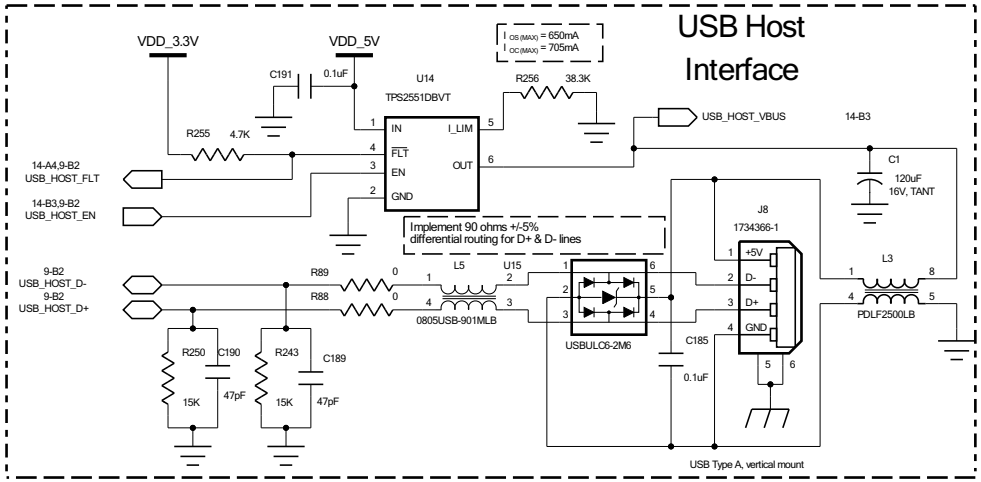

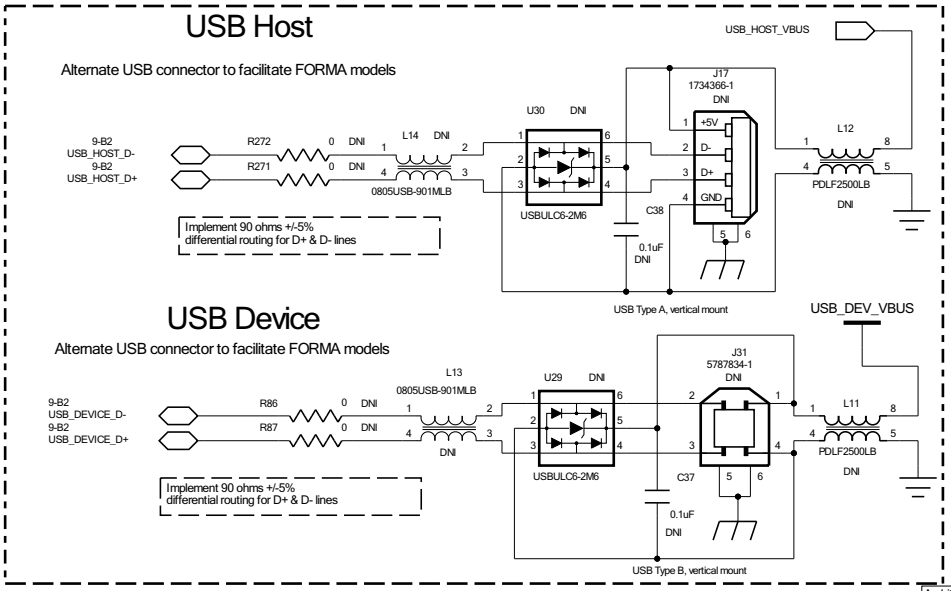

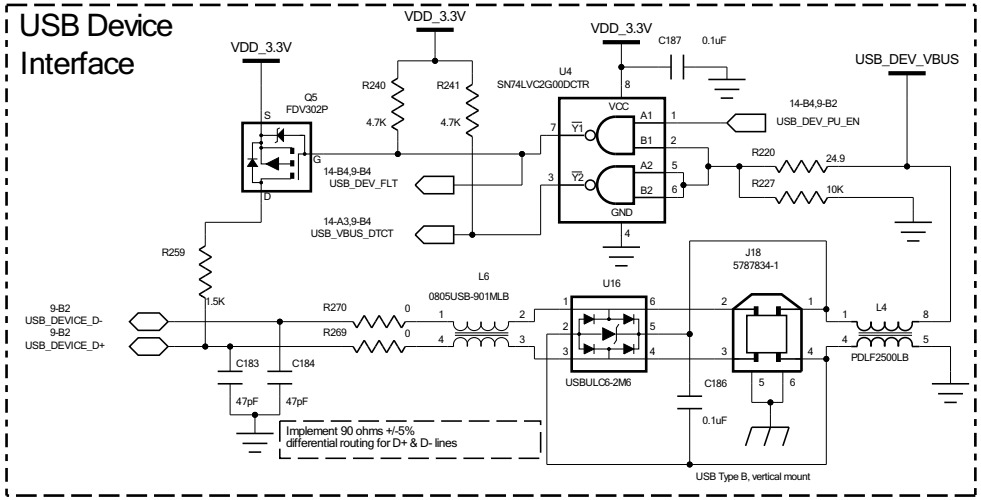

ThermoFisher SCIENTIFIC

THE INFORMATION CONTAINED HERIN IS THE PROPRIETARY DATA OF THERMOFISHER SCIENTIFIC. IT IS NOT TO BE PRODUCED OR DISCLOSED IN WHOLE OR IN PART WITHOUT PRIOR WRITTEN CONSENT OF THERMO FISHER SCIENTIFIC.

DO NOT SCALE THIS DRAWING.

TITLE

USB Host, USB Device & SD Card

SIZE	DWG NO	REV
B	315198I01	1.04

Architect: AMRUTH HIREMATH

SCALE

SHEET 11 of 14

29 Sep 2009