PRODUCT NUMBER ("LF" DENOTES LEAD-FREE)	CONTACT PLATING NOTE	MATING LENGTH, DIM "X"				ROHS COMPATIBILITY
		POSN 1	POSN 2	POSN 3	POSN 4	
10028916-4444P00	2	1.10	1.10	1.10	1.10	N/A
10028916-4444P00LF	3					SEE NOTE 9
10028916-5555P00	2	2.60	2.60	2.60	2.60	N/A
10028916-5555P00LF	3					SEE NOTE 9
10028916-4555P00	2	1.10	2.60	2.60	2.60	N/A
10028916-4555P00LF	3					SEE NOTE 9
10028916-5455P00	2	2.60	1.10	2.60	2.60	N/A
10028916-5455P00LF	3					SEE NOTE 9
10028916-5545P00	2	2.60	2.60	1.10	2.60	N/A
10028916-5545P00LF	3					SEE NOTE 9
10028916-5554P00	2	2.60	2.60	2.60	1.10	N/A
10028916-5554P00LF	3					SEE NOTE 9
10028916-4554P00	2	1.10	2.60	2.60	1.10	N/A
10028916-4554P00LF	3					SEE NOTE 9
10028916-4455P00	2	1.10	1.10	2.60	2.60	N/A
10028916-4455P00LF	3					SEE NOTE 9
10028916-5544P00	2	2.60	2.60	1.10	1.10	N/A
10028916-5544P00LF	3					SEE NOTE 9

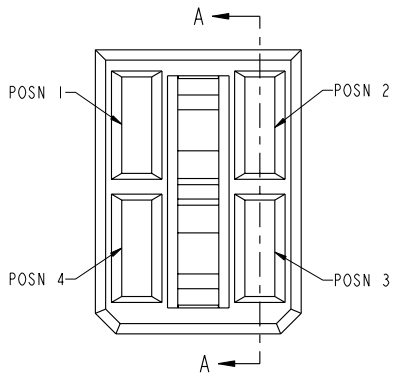

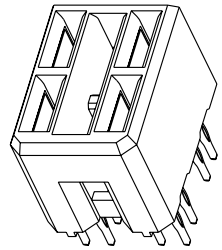

SCALE 4:1

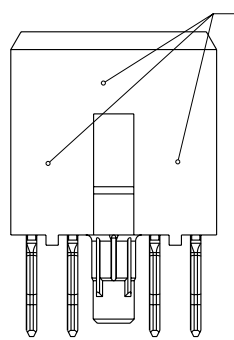

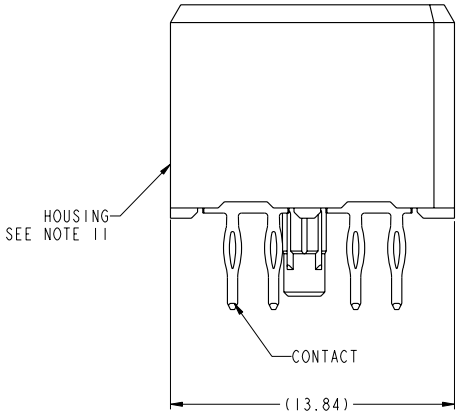

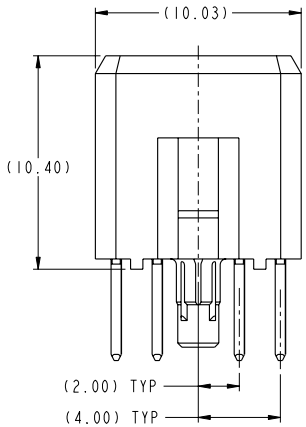

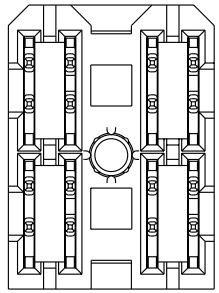

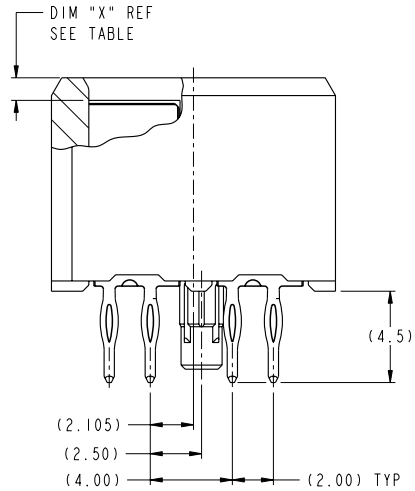

SECTION A-A

CONFIDENTIAL

www.fciconnect.com	surface 3.2 ASME Y14.5	tolerance std ASME Y14.5 -	projection	MM			
	TOLERANCES UNLESS OTHERWISE SPECIFIED						
Dr W.J.SWAIN 2003-05-22	ANGULAR 0° ±2°	LINEAR 0.X ±.3	size A2	Scale 1:1			
Eng ANDREW YONG 2010-05-11		0.XX ±.1					
Chr C.H. TAN 2010-05-11		0.XXX ±.05	ECN S10-0086				
Appr JOEY NG 2010-05-11	Product family 2mm High Power		Spec ref GS-12-220				
title RECEPTACLE ASSEMBLY, POWER			dwg no 10028916	Rev. H			
catalog no -			CUSTOMER	sheet 1 of 2			

rev	ecn no	dr	date
H	S10-0086	AY	2010-05-11
-	-	-	-
C	V05-0480	WJS	2005-05-16
D	S05-0301	WJS	2005-10-24
E	S05-0325	CH	2005-11-10
F	S06-0412	LS	2006-12-21
G	S09-0319	YK	2009-10-14

Copyright FCI.

REV F - 2006-06-17

TOP LAYER DESCRIPTION	TABLE I PLATED THROUGH-HOLE REQUIREMENTS							
	DRILLED HOLE DIAMETER	COPPER THICKNESS	TIN-LEAD THICKNESS	NICKEL THICKNESS	GOLD THICKNESS	TIN THICKNESS	SILVER THICKNESS	FINISHED HOLE DIAMETER (DIM"A") H
TIN-LEAD	0.81-0.86 (0.85 DRILL)	0.025 - 0.050	0.005 - 0.015	--	--	--	--	0.65 - 0.80
IMMERSION TIN	0.81-0.86 (0.85 DRILL)	0.025 - 0.050	--	--	--	0.9 - 1.5um	--	0.70 - 0.80
IMMERSION SILVER	0.81-0.86 (0.85 DRILL)	0.025 - 0.050	--	--	--	--	0.15 - 0.65um	0.70 - 0.80
COPPER (SEE NOTE 12)	0.81-0.86 (0.85 DRILL)	0.025 - 0.050	--	--	--	--	--	0.70 - 0.80
GOLD	0.81-0.86 (0.85 DRILL)	0.025 - 0.050	--	0.003 - 0.007	FLASH UP TO 0.0002	--	--	0.69 - 0.80

NOTES:

1. CONNECTOR MATERIALS:
   HOUSING: HIGH TEMPERATURE THERMOPLASTIC, BLACK UL 94V-0 COMPLIANT
   CONTACT: HIGH PERFORMANCE COPPER ALLOY
2. CONTACT PLATING:
   PRESS-FIT TAIL: 0.5um TIN-LEAD OVER NICKEL.
   SEPARABLE INTERFACE: 0.76um MIN GOLD OVER NICKEL.
3. CONTACT PLATING (LEAD-FREE):
   PRESS-FIT TAIL: 0.5um MIN MATTE TIN OVER NICKEL.
   SEPARABLE INTERFACE: 0.76um MIN GOLD OVER NICKEL.
4. PRODUCT SPECIFICATION: GS-12-220
5. APPLICATION SPECIFICATION: GS-20-023
6. PRODUCT MARKING (PRODUCT NUMBER & LOT CODE) ON HOUSING IN AREA SHOWN, EITHER SIDE.
7. MINIMUM NOMINAL BOARD THICKNESS: 2.4mm
8. REFER TO CUSTOMER DRAWING SK100359II FOR INFORMATION REGARDING PCB LAYOUT OF POWER AND GUIDE MODULES RELATIVE TO AIRMAX SIGNAL MODULES.
9. PRODUCT MEETS EUROPEAN UNION DIRECTIVES AND OTHER COUNTRY REGULATIONS AS DESCRIBED IN FCI SPECIFICATION GS-22-008.
10. PACKAGING MEETS FCI SPECIFICATION GS-14-920
11. HOUSING COMPONENT WILL WITHSTAND EXPOSURE TO 260° PEAK TEMPERATURE FOR 60 SECONDS IN A CONVECTION, INFRA-RED OR VAPOR-PHASE REFLOW OVEN.
12. COPPER PLATING THICKNESS AT CENTER OF VIA HOLE CAN BE NO MORE THAN 0.003 LESS THAN OTHER AREAS.
13. KEEPOUT AREA APPLICABLE FOR HIGH PROFILE POWER HEADER WITH 14.70MM HEIGHT ABOVE TOP SURFACE OF DAUGHTER CARD. IT MAY BE 11.5MM IF A LOWER PROFILE HEADER IS USED.
14. A H SYMBOL WILL BE NEXT TO ANY DIMENSION, VIEW, OR NOTE WHICH HAS BEEN MODIFIED WITH THE CURRENT DRAWING REVISION

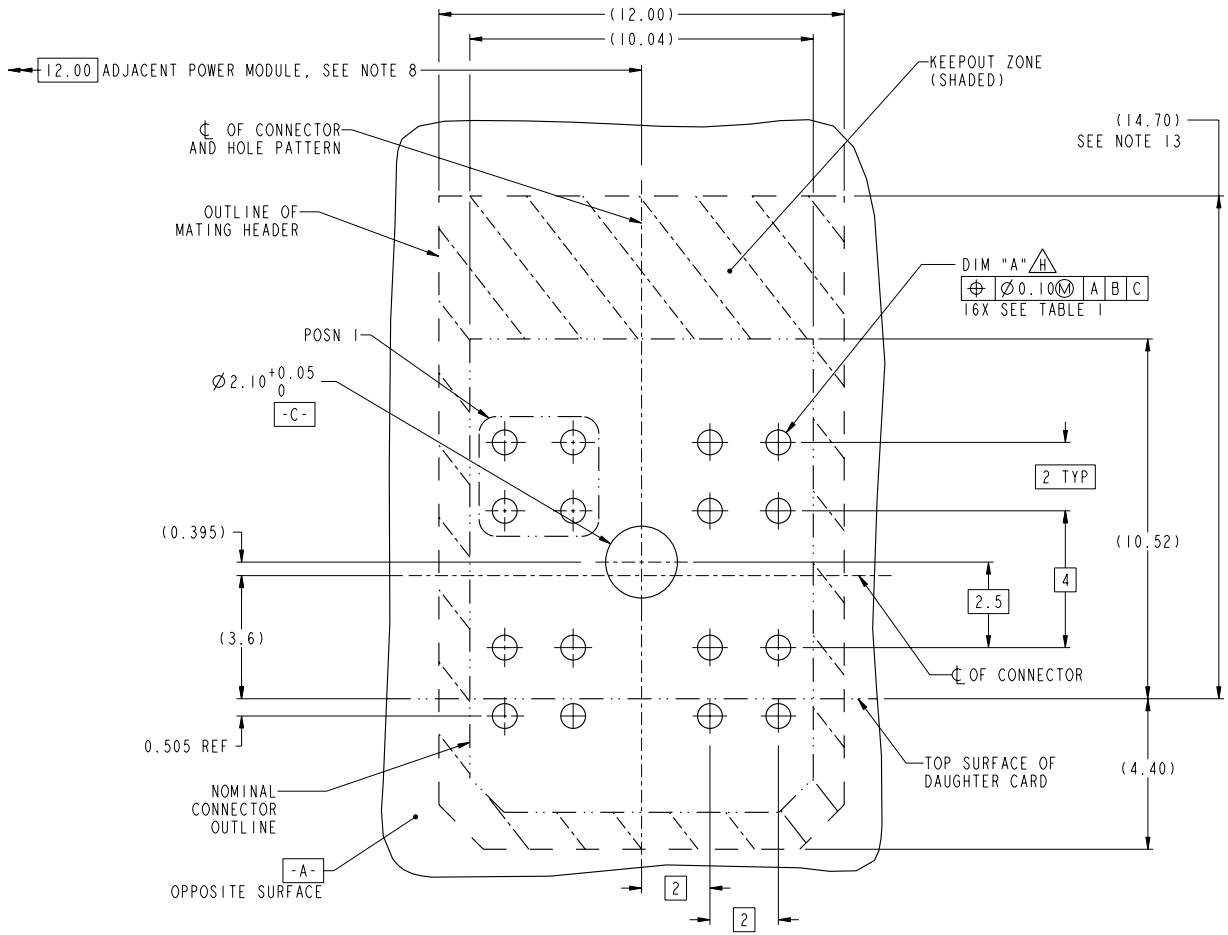

RECOMMENDED PCB LAYOUT, COMPONENT SIDE
SEE NOTE 7
SCALE 10:1

FCI	title RECEPTACLE ASSEMBLY, POWER	dwg no 10028916	Rev. H
	catalog no -	CUSTOMER	sheet 2 of 2

Copyright FCI.

REV F - 2006-06-17