REVISIONS			
REV	DESCRIPTION	DATE	APPROVED
A	Original Version	4/10/00	Tom Stoll
B	Change File Name	6/20/00	Tom Stoll

Rev. C - 01/05/05, Remove IRQ3 connection

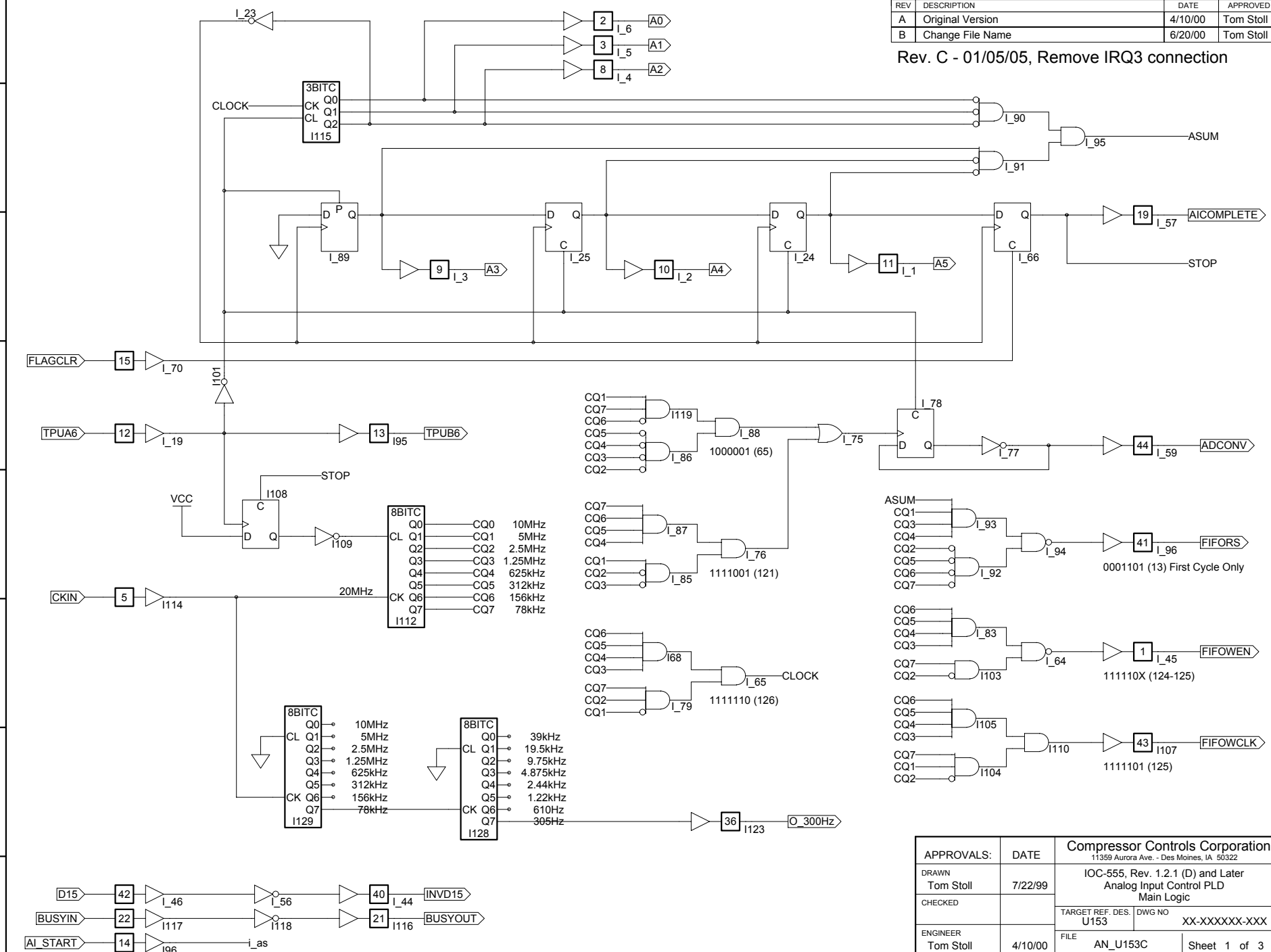

APPROVALS:	DATE	Compressor Controls Corporation 11359 Aurora Ave. - Des Moines, IA 50322	
DRAWN Tom Stoll	7/22/99	IOC-555, Rev. 1.2.1 (D) and Later Analog Input Control PLD Main Logic	
CHECKED		TARGET REF. DES. U153	DWG NO XX-XXXXXX-XXX
ENGINEER Tom Stoll	4/10/00	FILE AN_U153C	Sheet 1 of 3