THIS DOCUMENT CONTAINS PROPRIETARY INFORMATION AND SUCH INFORMATION MAY NOT BE DISCLOSED TO OTHERS FOR ANY PURPOSE NOR FOR MANUFACTURING PURPOSES WITHOUT WRITTEN PERMISSION FROM COMPRESSOR CONTROLS CORP.

DWG. NO.	SH	REV.
18-550555-001/002	1	L1

REVISIONS

REV.	DESCRIPTION	APPD.	DATE
A	RELEASED PER ERN 500/9907/001	LB	7/22/99
B	BOM CHANGES PER CRN 500/9910/004	LB	2/7/2000
C	CAP CHANGES PER CRN 500/0003/018		
D	PCB REVISION PER CRN 500/0005/011		
E	CHANGES PER CRN 500/0010/009	TS	9/25/00
F	CHANGES PER CRN 500/0103/008	TS	02/20/01
G	CHANGES PER CRN 500/0112/003	TS	12/06/01
H	CHANGES PER CRN 500/0201/009	TS	01/16/02
J1	DUPLEX RELEASED PER ERN 500/0205/004, SIMPLEX NOT RELEASED	TS	05/24/02
J2	DUPLEX CHANGED PER CRN 500/0210/030, SIMPLEX NOT RELEASED	TS	08/14/02
K1	SIMPLEX: CHANGES PER CRN 500/0209/011; DUPLEX: CHANGES PER CRN 500/0208/005	TS	10/18/02
K2	VDDSYN POWER FILTER ADDED PER CRN 500/0304/013	LB	4/28/03
K3	LOCTITE ADDED PER CRN 500/0306/013 (Simplex) AND 500/0306/012 (Duplex)	TS	7/10/03
K4	CHANGES PER CRN 500/0401/007, REMOVE CPCI PULL-UPS	TS	01/21/04
K5	CHANGES PER CRN 500/0405/001	DC	05/27/04
L1	SEE PAGE 2		

REVISION	DATE	PAGE	DESCRIPTION
A	7/22/99	LB	RELEASE PER ERN 500/9907/001
B	1/28/2000	LB	CRN 500/9910/004 R7 CHANGED TO 24.9K, R189 CHANGED TO 22.6K, R6 CHANGED TO 8.25K, R5 CHANGED TO 29.4K U126 & U134 CHANGED TO 8K DEVICES IMPLEMENT MDN 500-005: C131 CHANGED TO 0.001uF, REMOVE CR32, 10k PULL-UP LA2.68 TO LA2.70
C	5/9/00	TS	CRN 500/0003/018 REMOVE C130, CHANGE C132 & 134 TO 68nF, CHANGE C65 TO 4.7nF SEE TRACK RECORD 2139
D	3/17/00		2006: Add local temperature sensor for the 555 processor 2048: Add independent Analog Input Low Reference 2054: 1206 size capacitors on 1210 pads 2058: Remove silkscreen triangle for default jumper settings 2060: WD_Clock Incorrect Operation 2076: initial 3.3V must be less than 150mV when IOC starts to power up 2083: Remove jumpers for external SRAM and Flash Chip Select 2084: MPC555 Flash Programming Voltage Control 2085: Add External Real Time Clock with Watchdog Timer 2086: Serial EEPROM's too small 2087: Remove Rev. C MPC-555 patches from PLD's 2088: Change Analog Input High Reference 2089: Add Fuse Monitoring Signals to CPCI connectors and external latch 2090: Missing TRST Pull-up 2091: Analog Output Op-Amp Failure 2092: Analog Output Current Span 2094: Analog Input Range Adjustment 2095: Remove 5.6V Zener Diode 2096: Reset Button Action 2098: Remove 20Mhz Oscillator Y3 from BOM
E	9/22/00		2023: Add external Reset Config Word to allow booting from external flash 2090: Change TRST to pull-down 2110: Correct Ref. Des. Locations of CR2 and CR55 (PCB only) 2111: Add WEO signal to U135 to fix software test points 2139: Fix Power-up timing on new power controller 2140: Floating Address Bus during reset - Rev. G processor 2183: Correct connections to Flash Power Mux (U144) 2184: Replace solder jumpers with 0 ohm resistors (J1, J3, J4, J5, J6, J9) 2185: Correct serial port LED connections 2186: Add missing pull-ups 2190: Change DAC's to more available part 2191: Add footprint for smaller MUX's (PCB only) 2221: Change 4V reference to more available part 2222: Remove NVRAM and SuperCap 2223: Address Bus is 5V during reset 2225: Invert TPU lines driving RTS signal
F	02/20/01		Add Hreset to MODCLK circuit 2277: Change flash jumper to "Program" default 2278: Replace 5342 DACs with 7396 & 7247 2279: Replace all OP712 op-amps with OP249 2280: Fix +15V readback circuit 2281: 3/5V Level Shifter for new 7396 DAC's
G	11/27/01	2,3,4,6,22	2687 - Hot Swap PCI Bridge
		7,8	2680 - Temp sensor Power
		8	2681 - Add pull-up on SPI port:MISO
		8	2682 - Add 3.3 and 5V Read-backs
		9	2686 - Remove 3.6864 Mhz oscillator
		9,14	2685 - Modify PLD to work with either type of DAC
		9,22	Use Tinylogic buffers for BD-SEL and 20Mhz Oscillator
		10	2346 - Add pull-ups to PLD port, change to 5V
		11	2683 - Add address lines for larger SRAM on 512k x 8 locations
		22	2300 - Remove On/Off Connection on DC/DC
		PCB	2295 - via under panel mounting area
		PCB	2688 - Add mounting holes for solder side cover
		PCB	2689 - Through hole connectors for LA2
		PCB	Check clearance for larger BGA socket
		PCB	Check for clearance around RTCLK
H	01/09/02	13	2802 - CHANGE VALUE OF R262
		22	2739 - CHANGE R403 FROM PULL-DOWN TO PULL-UP
I	NONE		LETTER "I" SKIPPED AS REVISION LETTER
J	04/30/02	2,3,4,6	3114 - ADD SECOND ENUM SIGNAL, SWAP CONNECTIONS
		22	3115 - ADD SECOND LED
		3,4,22	3119 - CHANGE IDDQEN/PWR_GOOD CONNECTIONS
J2	10/18/02	22	3559 - CHANGE U125 & U157
K1	08/05/02	9	3377 - CHANGE BG TO PULL-UP
		21	3378 - CONNECT SERIAL P7 & P8 TO CHASSIS GROUND
		3,4,22	3379 - ADD IDDQEN LOGIC FOR REV AD PLX PART
K2	4/28/03	9	4005 - CHANGE POWER FILTER ON VddSYN
K3	07/10/03	PCB	4095 - ADD LOCTITE TO EJECTOR PANEL ASSEMBLY
K4	01/21/04	6	4479 - REMOVE cPCI PULL-UPS
K5	05/27/04	8	CRN: 500/0405/001 REMOVE PROGRAM EEPROM ADD BLANK (U134)

Rev L1
1. Processor replaced with BGA type
2. Filer added to AO verification chanel
3. Filer added to AI reference

CONTENTS

PAGE	DESCRIPTION
1	CONTENTS AND REVISION
2	CONTENTS AND REVISION (2)
3	PCI CONNECTORS
4	PCI BRIDGE, PRIMARY
5	PCI BRIDGE, SECONDARY
6	PEER COMMUNICATION DUAL PORT RAM
7	PCI SIGNAL PULL-UPS
8	MPC555 PROCESSOR
9	PROCESSOR PERIPHERALS
10	PROCESSOR POWER
11	PLD
12	SRAM
13	FLASH
14	LOGIC ANALYZER AND BDM CONNECTORS
15	ANALOG OUTPUT
16	ANALOG INPUT CONTROL
17	ANALOG INPUT 1-11
18	ANALOG INPUT 12-22
19	DIGITAL INPUTS
20	DIGITAL OUTPUS
21	FREQUENCY INPUTS AND FT SIGNALS
22	SERIAL COMMUNICATION
23	HOT SWAP POWER

NOT INSTALLED COMPONENTS LIST: SIMPLEX AND DUPLEX

PAGE	
6	RN116-129, RN216-229
7	R360
8	R359
9	R8, R9, R385, R388, R391, R392, R395-400, Y2, Y3
13	LA1, LA2
22	R65, R143, R362, R378-382, C130

NOT INSTALLED COMPONENTS LIST: SIMPLEX VERSION ONLY

PAGE	
2	P2, R384
4	U201-202, U204-205, RN201-214, R201-204, R373, R426-431
5	U301
6	RN231-233, RN240-264, R376
22	S1, R370-371, D14-15, R271, R336

NOT INSTALLED COMPONENTS LIST (DUPLEX VERSION ONLY)

PAGE	
2	R383
22	R405

OPERATIONAL JUMPER SETTINGS

JUMPER	PAGE	SETTING	FUNCTION
J2	9	1-2	INTERNAL FLASH WRITE PROTECT

NOTE: If jumpers are ever added to this design, DO NOT use the following Reference Designators
J1, J2, J3, J4, J5, J6, J8, J9, J10, J11, JP1, JP2, JP3, JP4, JP5, JP6, JP7, JP8, JP9, JP10, JP11, JP12

APPROVALS	DATE
DRAWN LUKE BROWN	02/07/00
CHECKED DAN CRAWFORD	05/27/04
ENGINEER TOM STOLL	01/21/04

COMPRESSOR CONTROLS CORPORATION
4725 121st Street - Des Moines, Iowa 50322

SCHEMATIC DRAWING
SERIES 5 I/O CARD
CONTENTS AND REVISION

SIZE	DWG. NO.	SHEET	PROD REV.
C	18-550555-001/002	1 OF 23	L1
	FILE IOCARD_L1.SCH	SCALE NONE	

THIS DOCUMENT CONTAINS PROPRIETARY INFORMATION AND SUCH INFORMATION MAY NOT BE DISCLOSED TO OTHERS FOR ANY PURPOSE NOR FOR MANUFACTURING PURPOSES WITHOUT WRITTEN PERMISSION FROM COMPRESSOR CONTROLS CORP.

DWG. NO.	SH	REV.
18-550555-001/002	2	L1

REVISIONS

REV.	DESCRIPTION	APPD.	DATE
L1	CHANGES RER CRN 500/0409/009	B.K.	9/14/04

REVISION	DATE	PAGE	DESCRIPTION	Record #
L1	08/31/04			
		8	BGA processor.	4732
		15	Filter added to all "AO monitoring" outputs R127,128,264,267,268,363 C374,357,358,359,372,373	3737
		16	Filtering caps added to AI gain/offset 2.5V source C374,375,376	
		21	Individual pull-up resistors and buffers for each FI R364,365,366,369,386,387 U120,125,157,16,164,165	2344
		23	"Not install" note for S2	4733
		10	C27 1u added to PCB	
		4,5	Power for clock buffers U163 and U205 moved from +5V to 3.3V_LONG	4779
		11	PLD U43 1.Separate signals TIOC_RESRET and FLASH_RESET instead of HRESET 2.Seperate signal LED_RESET instead of PORESET 3.Additional PLD pin to drive Healhty Relay.	4653
		10	TRST pull-down res R4 - 10k changed to 4.7k.	4780
		10	1.5k pull-up resistors R401,402,413 added to TAE, SRESET, HRESET?	4780
		9	C377 0.1u added to VHR at temp.sensor.	
		8,15,16	Signals AI_COMPLETE and AI_EMPTY routed from PLD/FIFO to 3V side of U28 and than from 5V side of U28 to processor. Two unused inputs on U28 grounded.	4842

APPROVALS	DATE
DRAWN Boris Kazatsker	09/01/04
CHECKED DAN CRAWFORD	05/27/04
ENGINEER TOM STOLL	01/21/04

COMPRESSOR CONTROLS CORPORATION
4725 121st Street - Des Moines, Iowa 50322

SCHEMATIC DRAWING
SERIES 5 I/O CARD
CONTENTS AND REVISION

SIZE	DWG. NO.	SHEET	PROD REV.
C	18-550555-001/002	2 OF 23	L1
	FILE IOCARD_L1.SCH	SCALE NONE	

THIS DOCUMENT CONTAINS PROPRIETARY INFORMATION AND SUCH INFORMATION MAY NOT BE DISCLOSED TO OTHERS FOR ANY PURPOSE NOR FOR MANUFACTURING PURPOSES WITHOUT WRITTEN PERMISSION FROM COMPRESSOR CONTROLS CORP.

DWG. NO.	SH	REV.
18-550555-001/002	3	L1

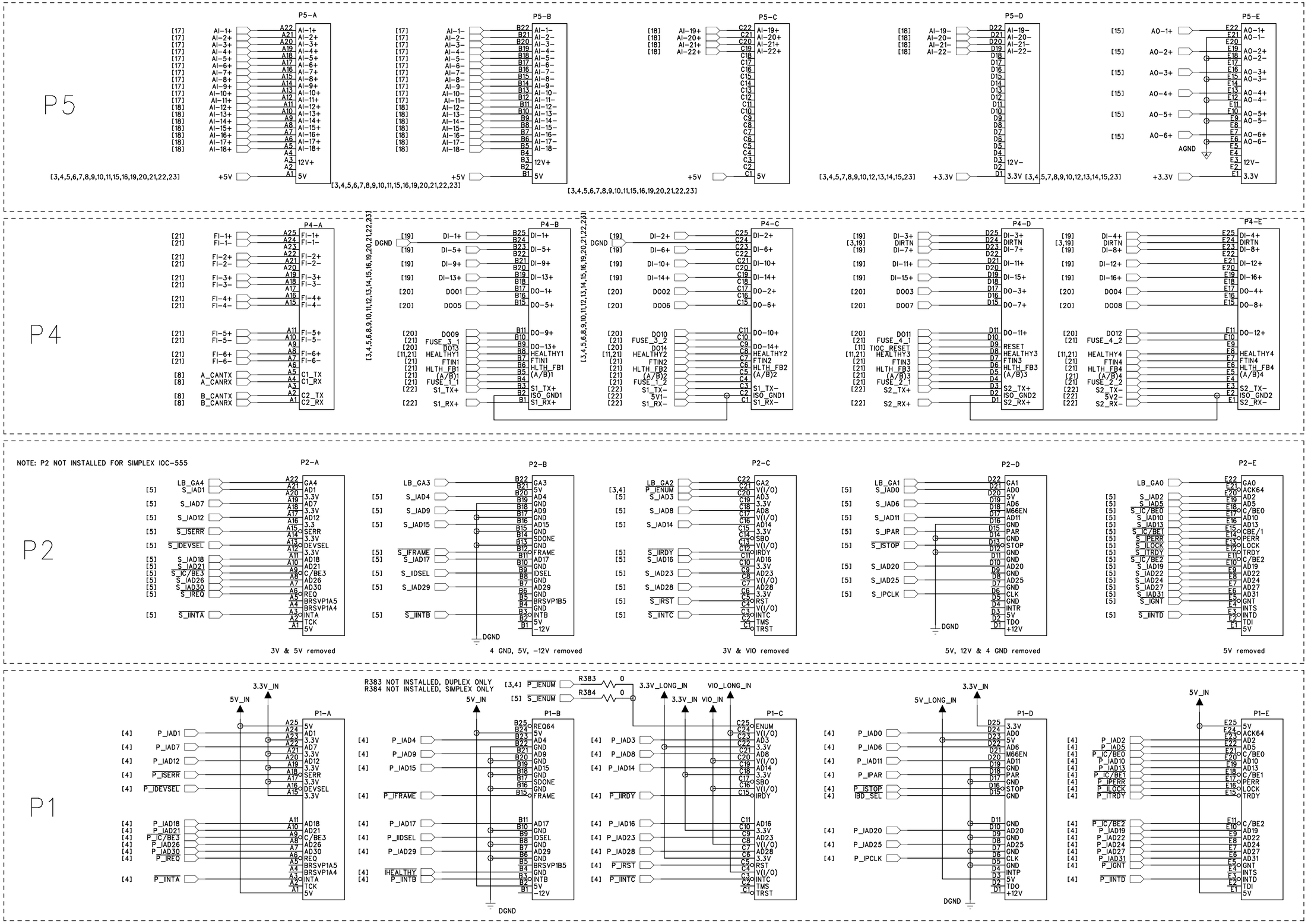

APPROVALS	DATE
DRAWN BORIS KAZATSKER	10/22/98
CHECKED DAN CRAWFORD	05/27/04
ENGINEER TOM STOLL	04/30/02

COMPRESSOR CONTROLS CORPORATION
4725 121st Street – Des Moines, Iowa 50322

SCHEMATIC DRAWING
SERIES 5 I/O CARD
PCI CONNECTORS

SIZE	DWG. NO.	SHEET	PROD REV.
C	18-550555-001/002	3 OF 23	L1
	FILE IOCARD_L1.SCH	SCALE NONE	

THIS DOCUMENT CONTAINS PROPRIETARY INFORMATION AND SUCH INFORMATION MAY NOT BE DISCLOSED TO OTHERS FOR ANY PURPOSE NOR FOR MANUFACTURING PURPOSES WITHOUT WRITTEN PERMISSION FROM COMPRESSOR CONTROLS CORP.

DWG. NO.	SH	REV.
18-550555-001/002	4	L1

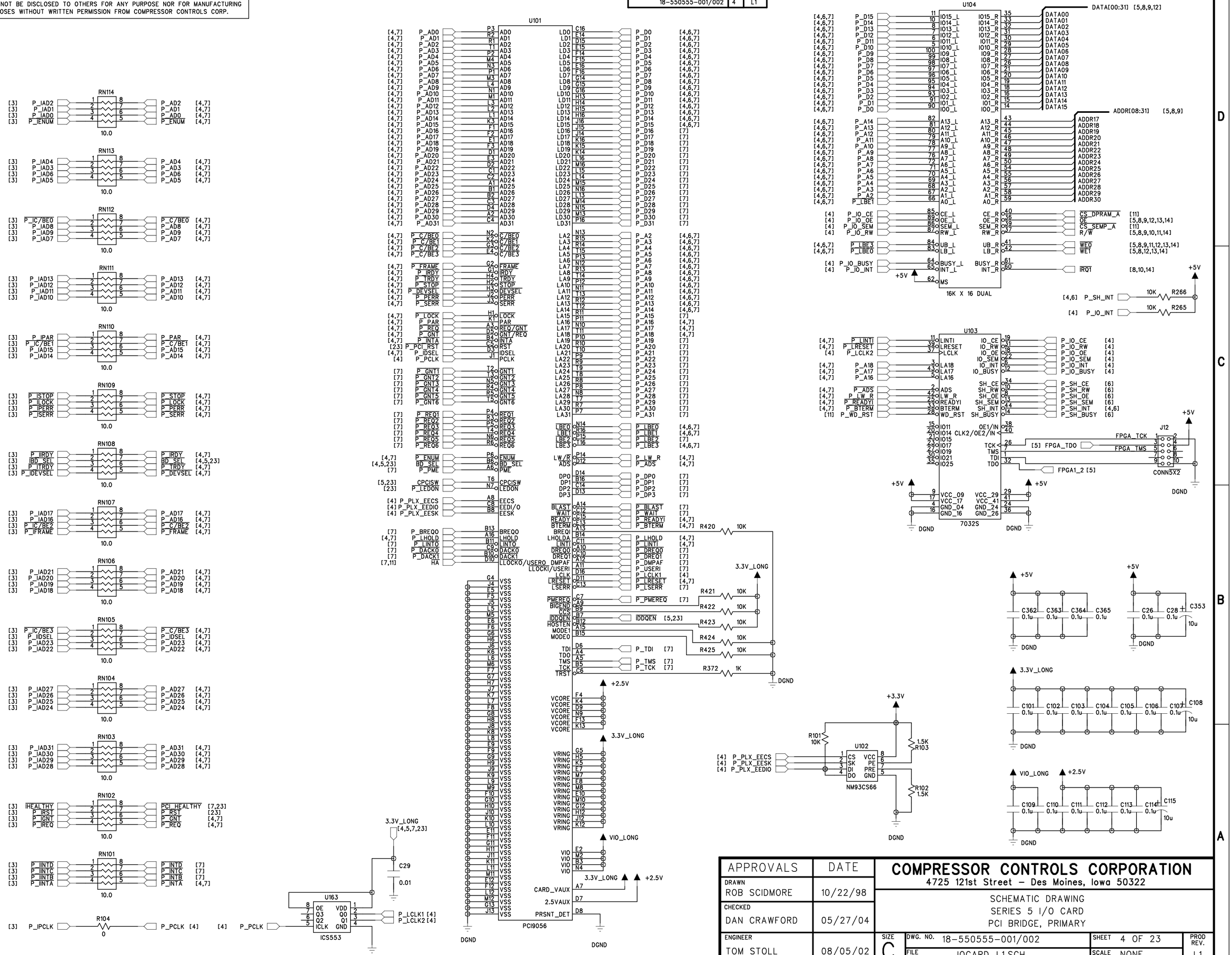

APPROVALS	DATE
DRAWN ROB SCIDMORE	10/22/98
CHECKED DAN CRAWFORD	05/27/04
ENGINEER TOM STOLL	08/05/02

COMPRESSOR CONTROLS CORPORATION
4725 121st Street – Des Moines, Iowa 50322

SCHEMATIC DRAWING
SERIES 5 I/O CARD
PCI BRIDGE, PRIMARY

SIZE	DWG. NO.	SHEET	PROD REV.
C	18-550555-001/002	4 OF 23	L1
	FILE IOCARD_L1.SCH	SCALE NONE	

THIS DOCUMENT CONTAINS PROPRIETARY INFORMATION AND SUCH INFORMATION MAY NOT BE DISCLOSED TO OTHERS FOR ANY PURPOSE NOR FOR MANUFACTURING PURPOSES WITHOUT WRITTEN PERMISSION FROM COMPRESSOR CONTROLS CORP.

DWG. NO. 18-550555-001/002 | SH 5 | REV. L1

NOTE: U201-202, U204-205, RN201-214, R201-204, R373, R426-431 NOT INSTALLED FOR SIMPLEX IOC-555

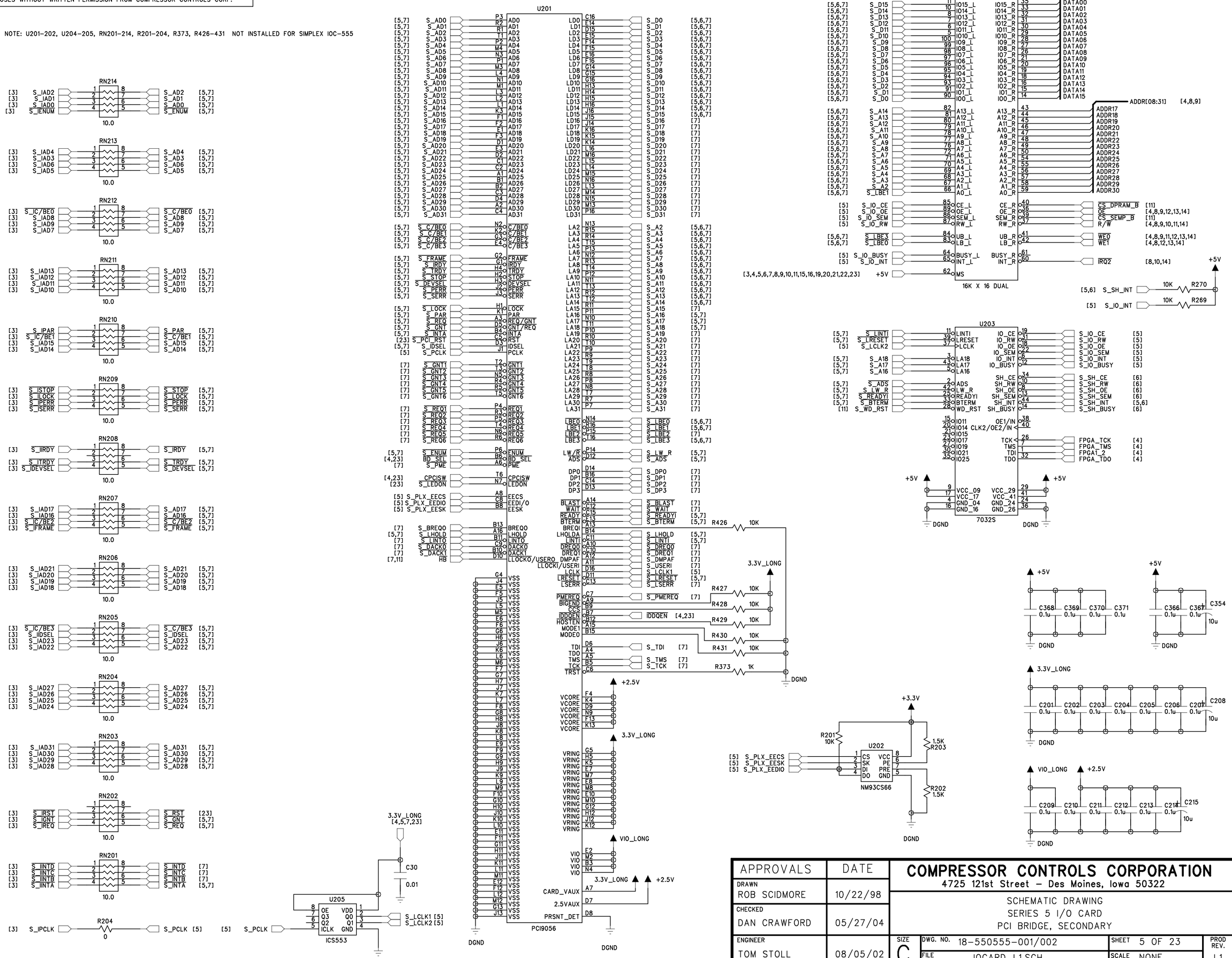

APPROVALS	DATE
DRAWN ROB SCIDMORE	10/22/98
CHECKED DAN CRAWFORD	05/27/04
ENGINEER TOM STOLL	08/05/02

COMPRESSOR CONTROLS CORPORATION
4725 121st Street – Des Moines, Iowa 50322

SCHEMATIC DRAWING
SERIES 5 I/O CARD
PCI BRIDGE, SECONDARY

SIZE	DWG. NO.	SHEET	PROD REV.
C	18-550555-001/002	5 OF 23	L1
	FILE IOCARD_L1.SCH	SCALE NONE	

THIS DOCUMENT CONTAINS PROPRIETARY INFORMATION AND SUCH INFORMATION MAY NOT BE DISCLOSED TO OTHERS FOR ANY PURPOSE NOR FOR MANUFACTURING PURPOSES WITHOUT WRITTEN PERMISSION FROM COMPRESSOR CONTROLS CORP.

THIS PART IS NOT INSTALLED ON SIMPLEX IOC-555

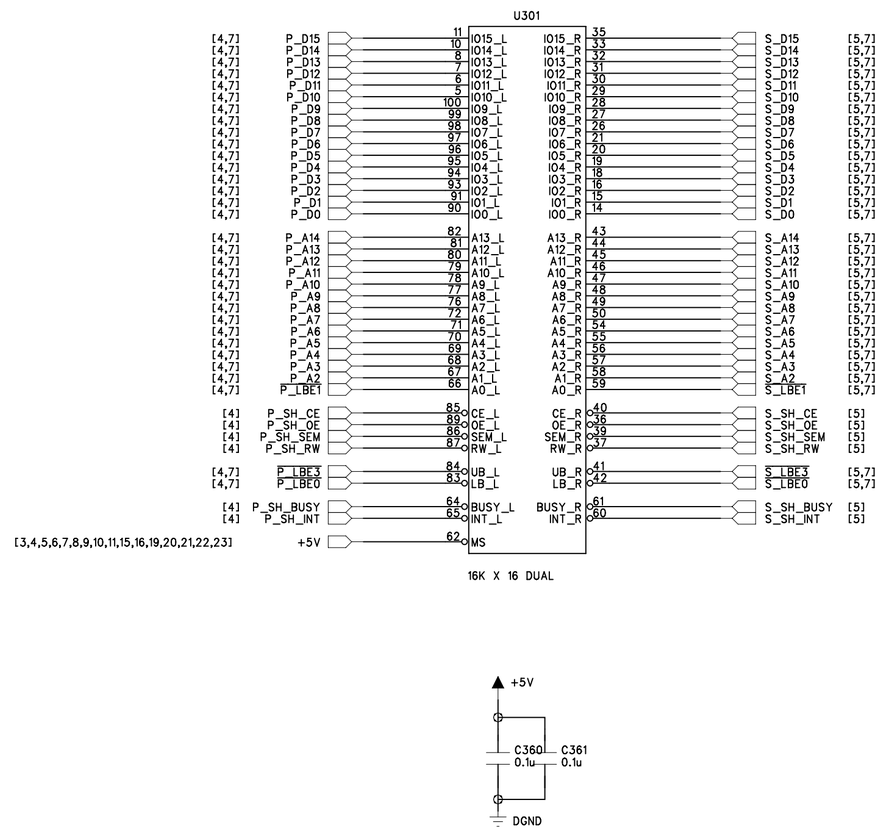

APPROVALS	DATE	COMPRESSOR CONTROLS CORPORATION 4725 121st Street – Des Moines, Iowa 50322			
DRAWN ROB SCIDMORE	10/22/98	SCHEMATIC DRAWING SERIES 5 I/O CARD PCI A TO PCI B DUAL PORT			
CHECKED DAN CRAWFORD	05/27/04				
ENGINEER LUKE BROWN	7/22/99	SIZE C	DWG. NO. 18-550555-001/002	SHEET 6 OF 23	PROD REV. L1
			FILE IOCARD_L1.SCH	SCALE NONE	

THIS DOCUMENT CONTAINS PROPRIETARY INFORMATION AND SUCH INFORMATION MAY NOT BE DISCLOSED TO OTHERS FOR ANY PURPOSE NOR FOR MANUFACTURING PURPOSES WITHOUT WRITTEN PERMISSION FROM COMPRESSOR CONTROLS CORP.

RN231-233, RN240-264, R376 NOT INSTALLED ON SIMPLEX IOC-555

RN116-129, RN216-229 NOT INSTALLED

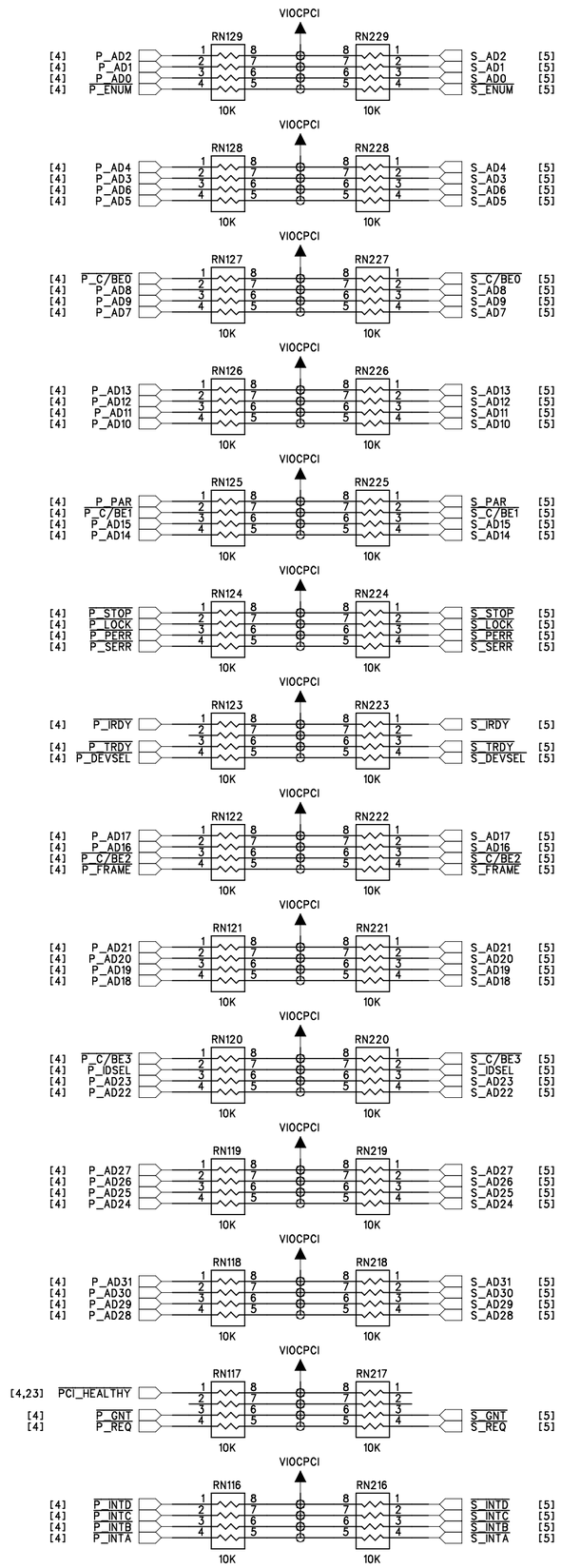

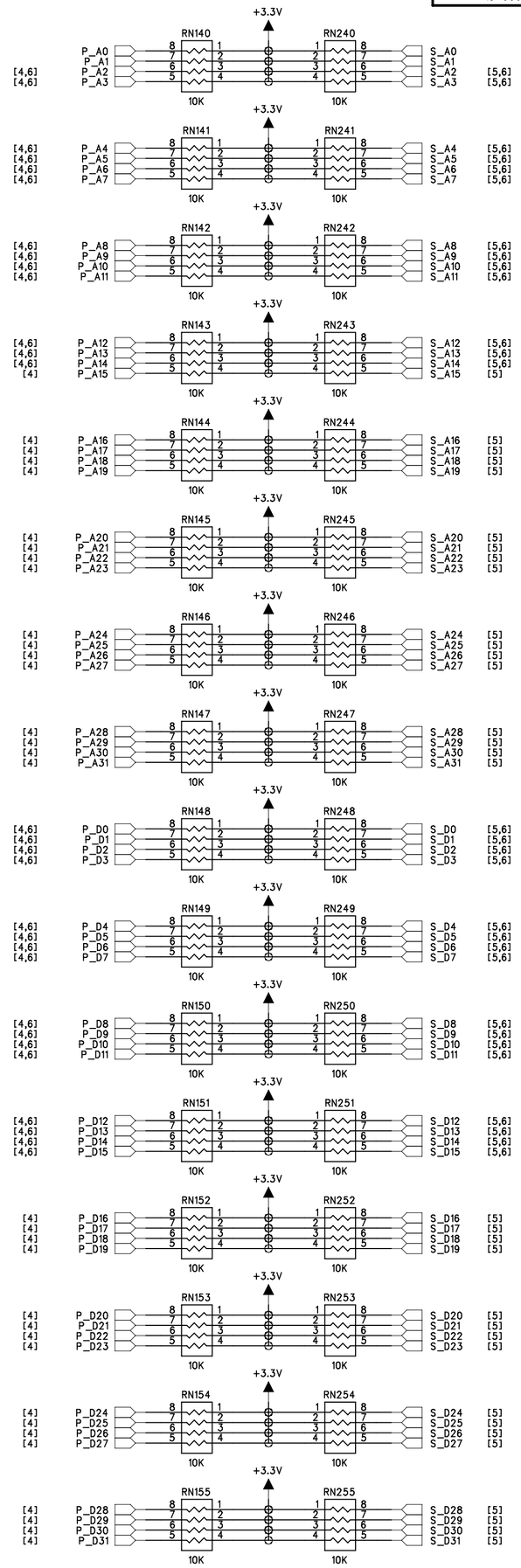

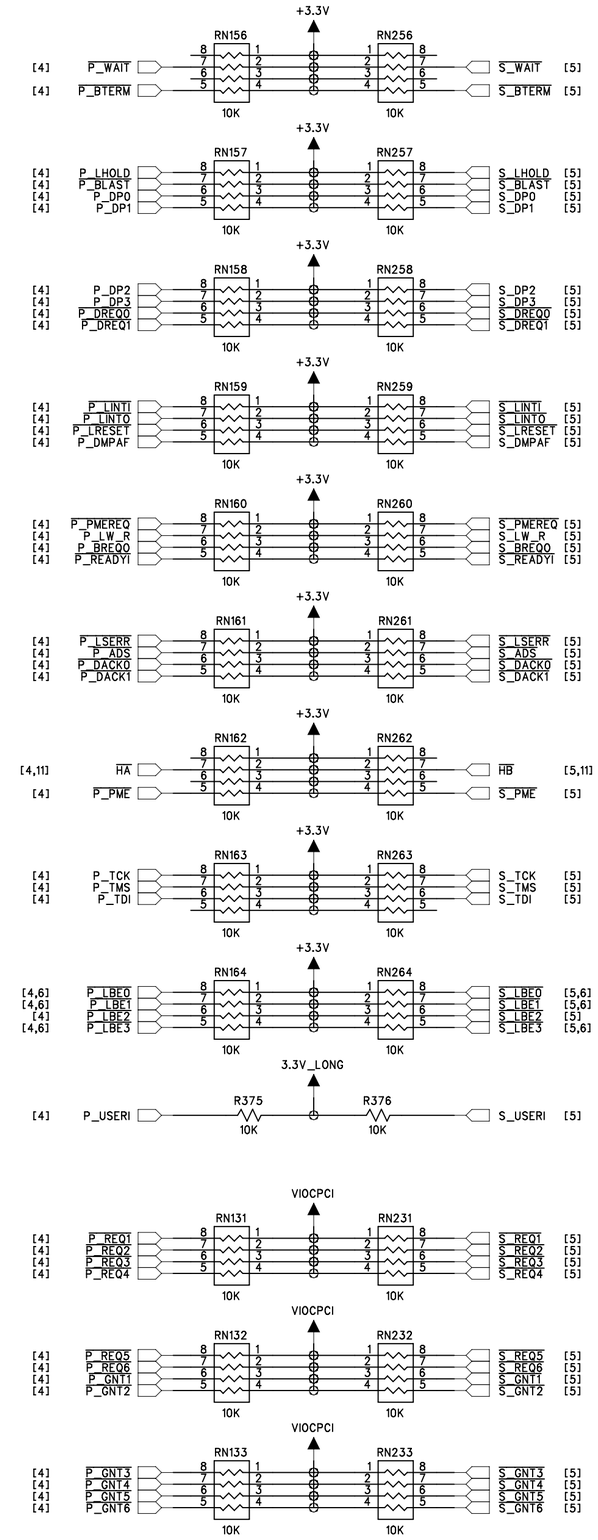

APPROVALS	DATE	COMPRESSOR CONTROLS CORPORATION 4725 121st Street – Des Moines, Iowa 50322			
DRAWN TOM STOLL	11/28/01	SCHEMATIC DRAWING SERIES 5 I/O CARD PCI PULL_UPS			
CHECKED DAN CRAWFORD	05/27/04				
ENGINEER TOM STOLL	01/21/04	SIZE C	DWG. NO. 18-550555-001/002	SHEET 7 OF 23	PROD REV. L1
			FILE IOCARD_L1.SCH	SCALE NONE	

THIS DOCUMENT CONTAINS PROPRIETARY INFORMATION AND SUCH INFORMATION MAY NOT BE DISCLOSED TO OTHERS FOR ANY PURPOSE NOR FOR MANUFACTURING PURPOSES WITHOUT WRITTEN PERMISSION FROM COMPRESSOR CONTROLS CORP.

DWG. NO.	SH	REV.
18-550555-001/002	8	L1

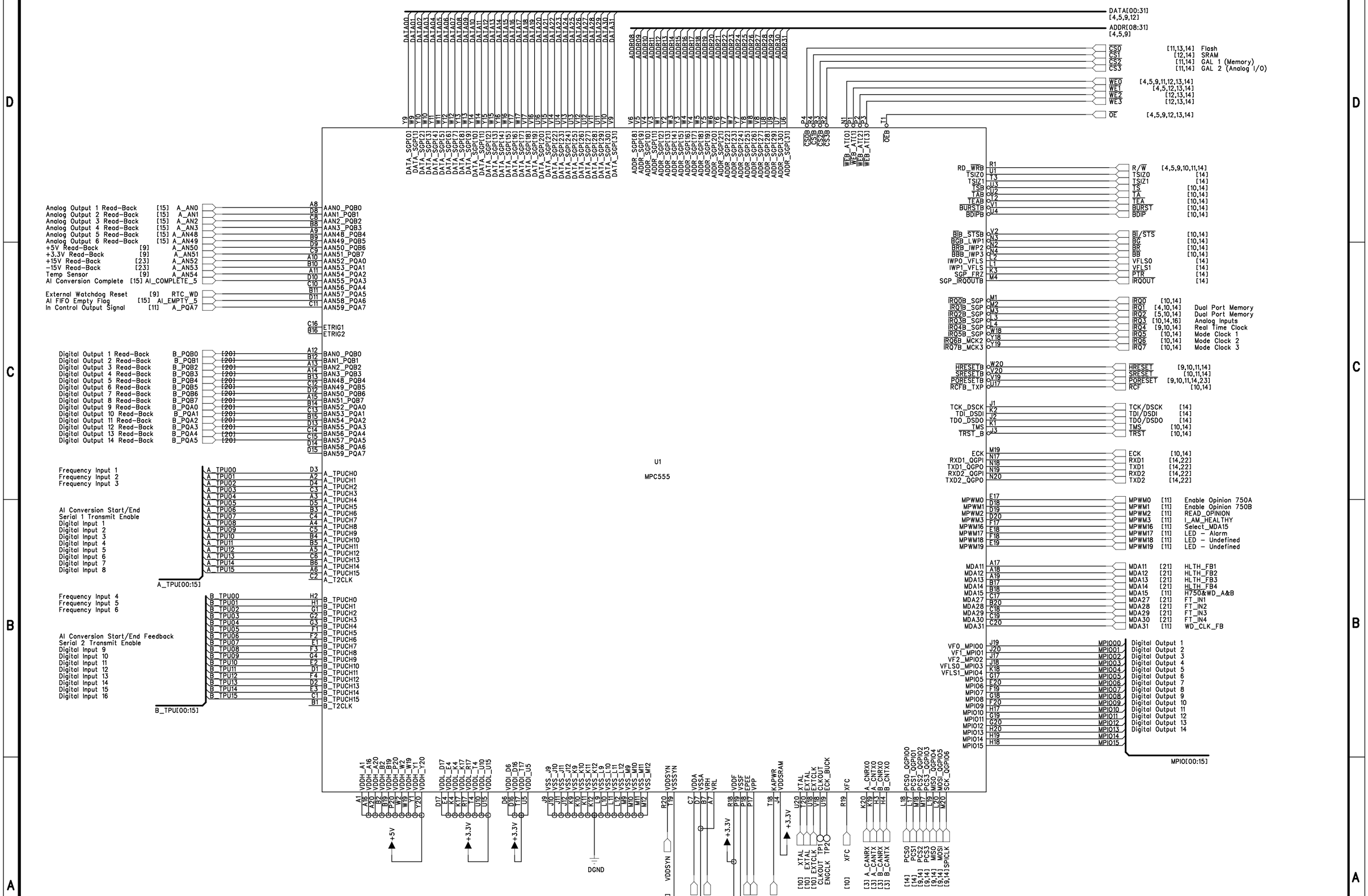

APPROVALS	DATE
DRAWN TOM STOLL	10/22/98
CHECKED DAN CRAWFORD	05/27/04
ENGINEER TOM STOLL	11/28/01

COMPRESSOR CONTROLS CORPORATION
4725 121st Street - Des Moines, Iowa 50322

SCHEMATIC DRAWING
SERIES 5 I/O CARD
555 PROCESSOR

SIZE	DWG. NO.	SHEET	PROD REV.
C	18-550555-001/002	8 OF 23	L1
	FILE IOCARD_L1.SCH	SCALE NONE	

THIS DOCUMENT CONTAINS PROPRIETARY INFORMATION AND SUCH INFORMATION MAY NOT BE DISCLOSED TO OTHERS FOR ANY PURPOSE NOR FOR MANUFACTURING PURPOSES WITHOUT WRITTEN PERMISSION FROM COMPRESSOR CONTROLS CORP.

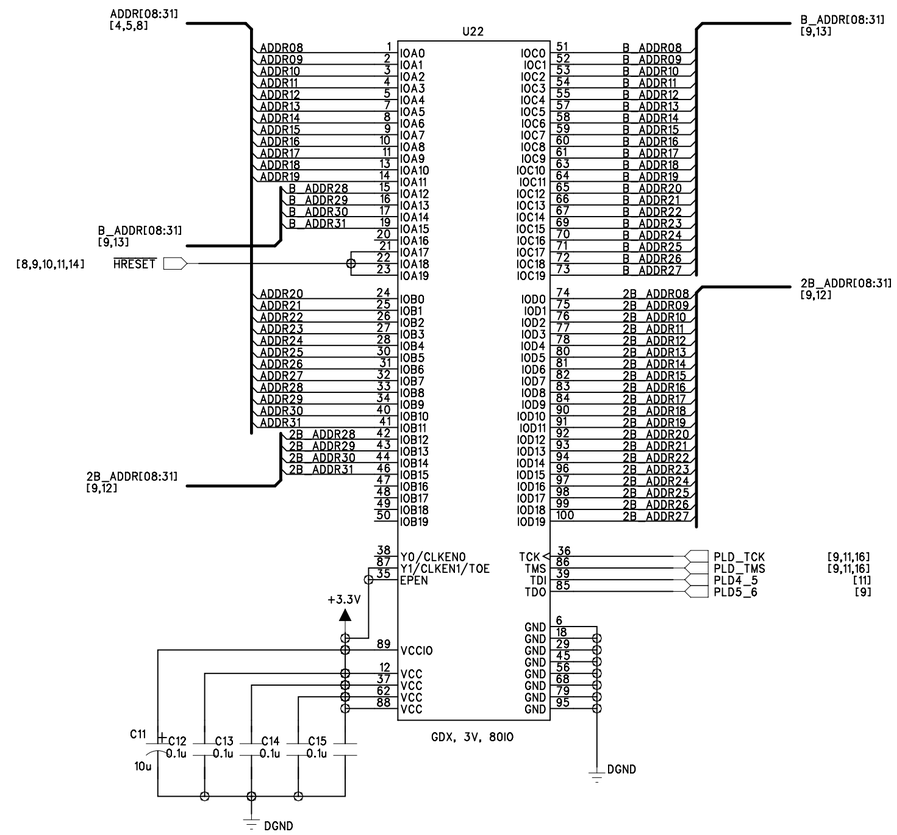

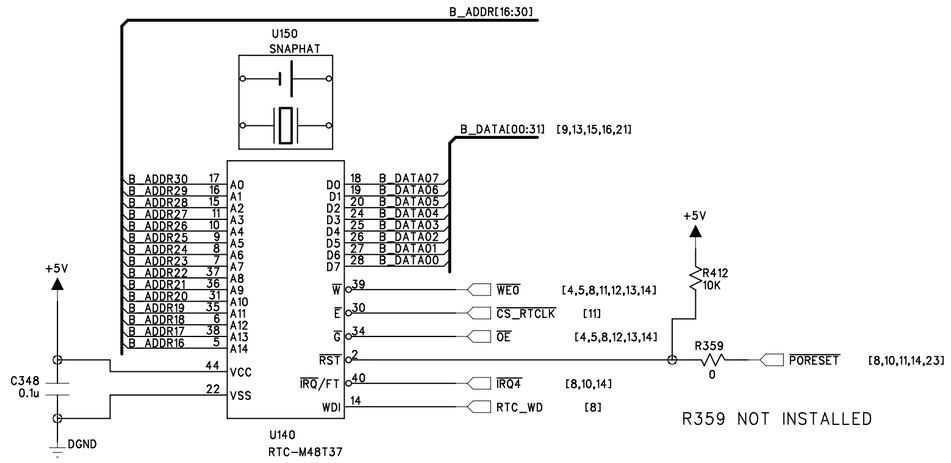

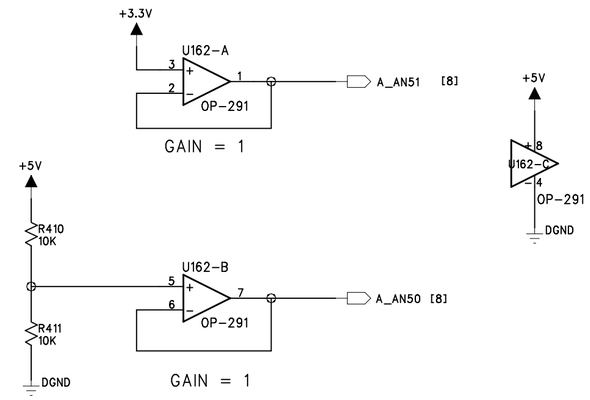

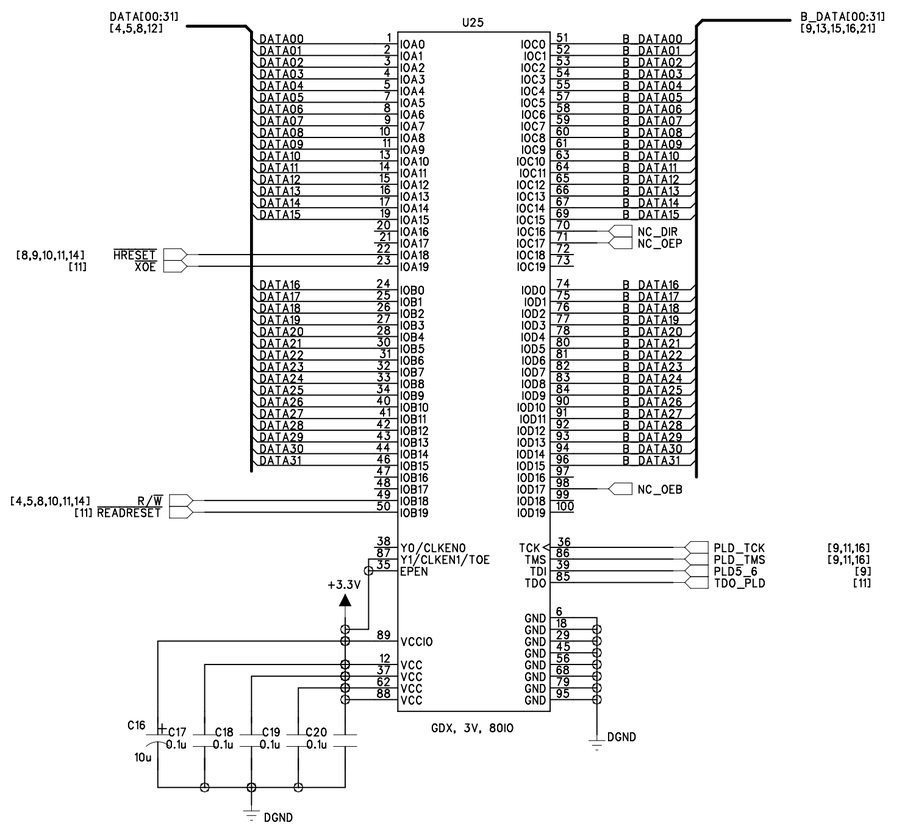

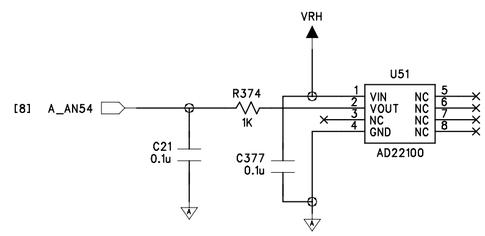

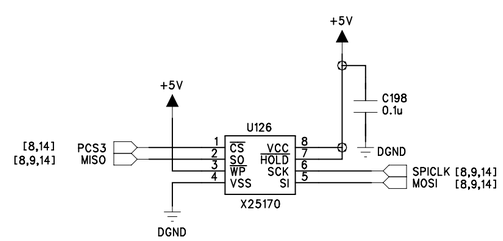

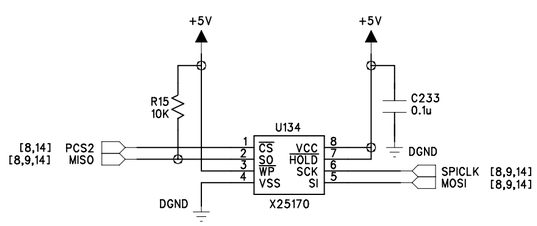

APPROVALS	DATE	COMPRESSOR CONTROLS CORPORATION 4725 121st Street – Des Moines, Iowa 50322			
DRAWN TOM STOLL	11/10/98	SCHEMATIC DRAWING SERIES 5 I/O CARD PROCESSOR PERIPHERALS			
CHECKED DAN CRAWFORD	05/27/04				
ENGINEER TOM STOLL	11/28/01	SIZE C	DWG. NO. 18-550555-001/002	SHEET 9 OF 23	PROD REV. L1
			FILE IOCARD_L1.SCH	SCALE NONE	

THIS DOCUMENT CONTAINS PROPRIETARY INFORMATION AND SUCH INFORMATION MAY NOT BE DISCLOSED TO OTHERS FOR ANY PURPOSE NOR FOR MANUFACTURING PURPOSES WITHOUT WRITTEN PERMISSION FROM COMPRESSOR CONTROLS CORP.

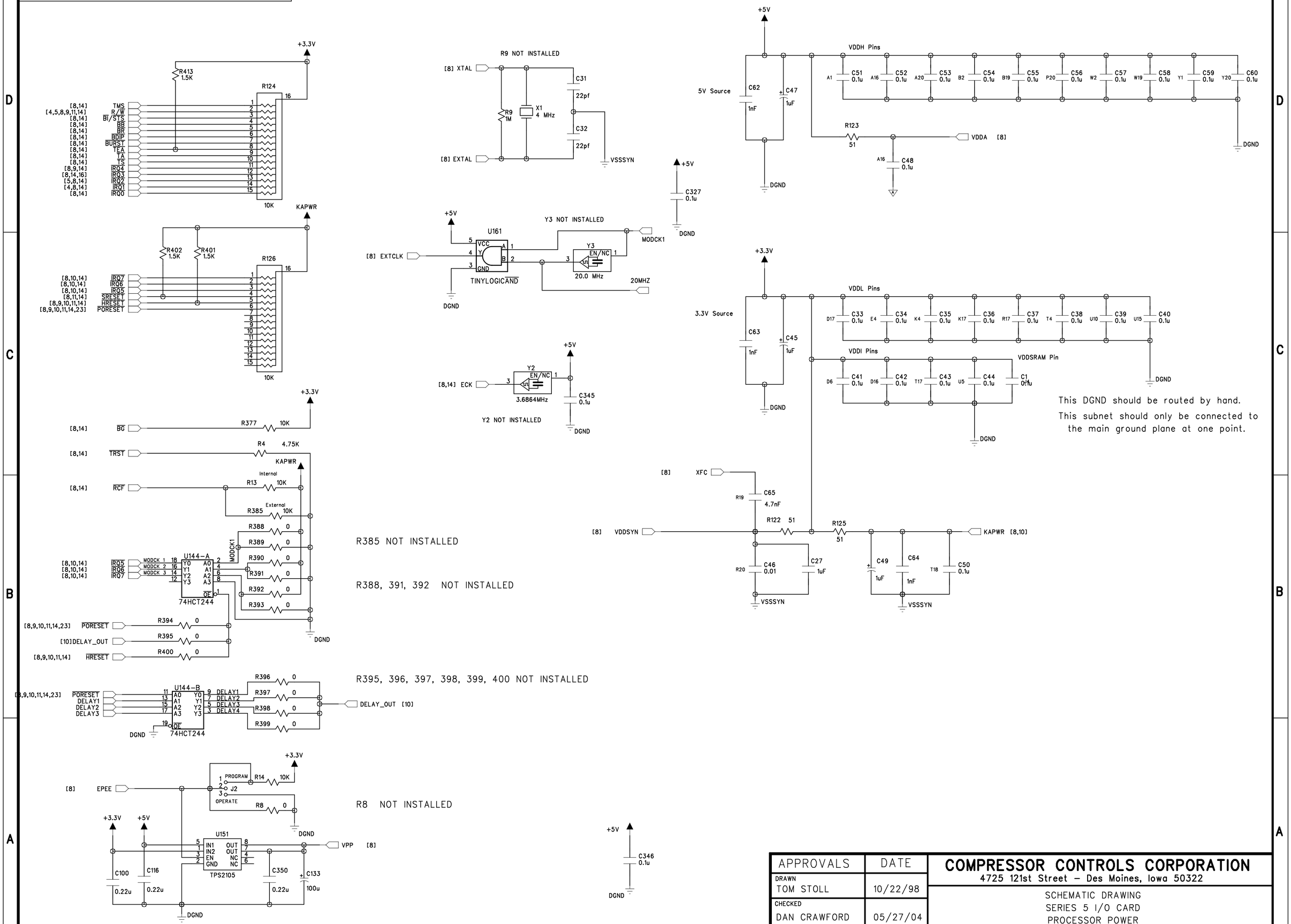

APPROVALS	DATE	COMPRESSOR CONTROLS CORPORATION 4725 121st Street – Des Moines, Iowa 50322			
DRAWN TOM STOLL	10/22/98	SCHEMATIC DRAWING SERIES 5 I/O CARD PROCESSOR POWER			
CHECKED DAN CRAWFORD	05/27/04				
ENGINEER LUKE BROWN	4/28/03	SIZE C	DWG. NO. 18-550555-001/002	SHEET 10 OF 23	PROD REV. L1
			FILE IOCARD_L1.SCH	SCALE NONE	

THIS DOCUMENT CONTAINS PROPRIETARY INFORMATION AND SUCH INFORMATION MAY NOT BE DISCLOSED TO OTHERS FOR ANY PURPOSE NOR FOR MANUFACTURING PURPOSES WITHOUT WRITTEN PERMISSION FROM COMPRESSOR CONTROLS CORP.

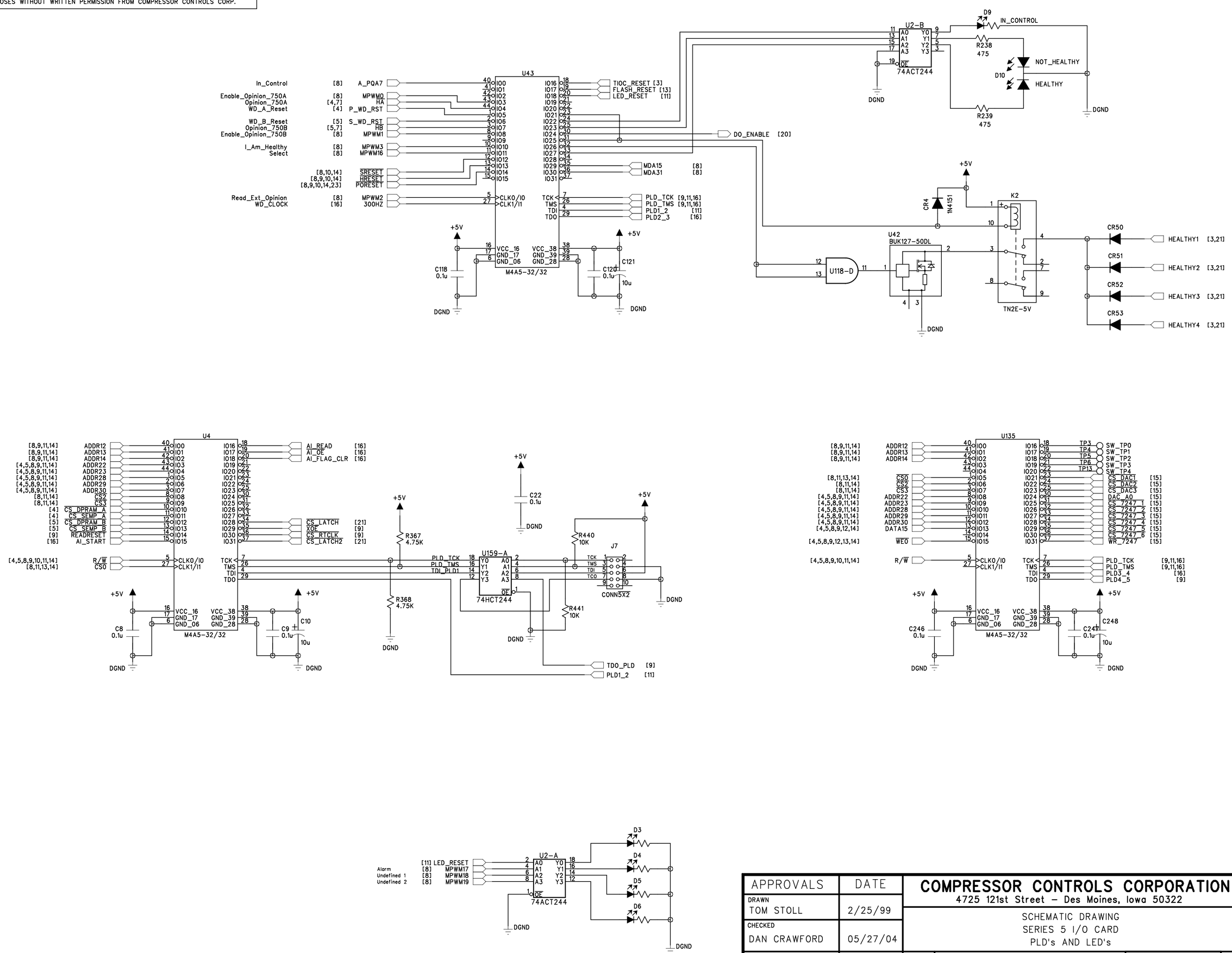

APPROVALS	DATE	COMPRESSOR CONTROLS CORPORATION 4725 121st Street – Des Moines, Iowa 50322			
DRAWN TOM STOLL	2/25/99	SCHEMATIC DRAWING SERIES 5 I/O CARD PLD's AND LED's			
CHECKED DAN CRAWFORD	05/27/04				
ENGINEER TOM STOLL	11/28/01	SIZE C	DWG. NO. 18-550555-001/002	SHEET 11 OF 23	PROD REV. L1
			FILE IOCARD_L1.SCH	SCALE NONE	

THIS DOCUMENT CONTAINS PROPRIETARY INFORMATION AND SUCH INFORMATION MAY NOT BE DISCLOSED TO OTHERS FOR ANY PURPOSE NOR FOR MANUFACTURING PURPOSES WITHOUT WRITTEN PERMISSION FROM COMPRESSOR CONTROLS CORP.

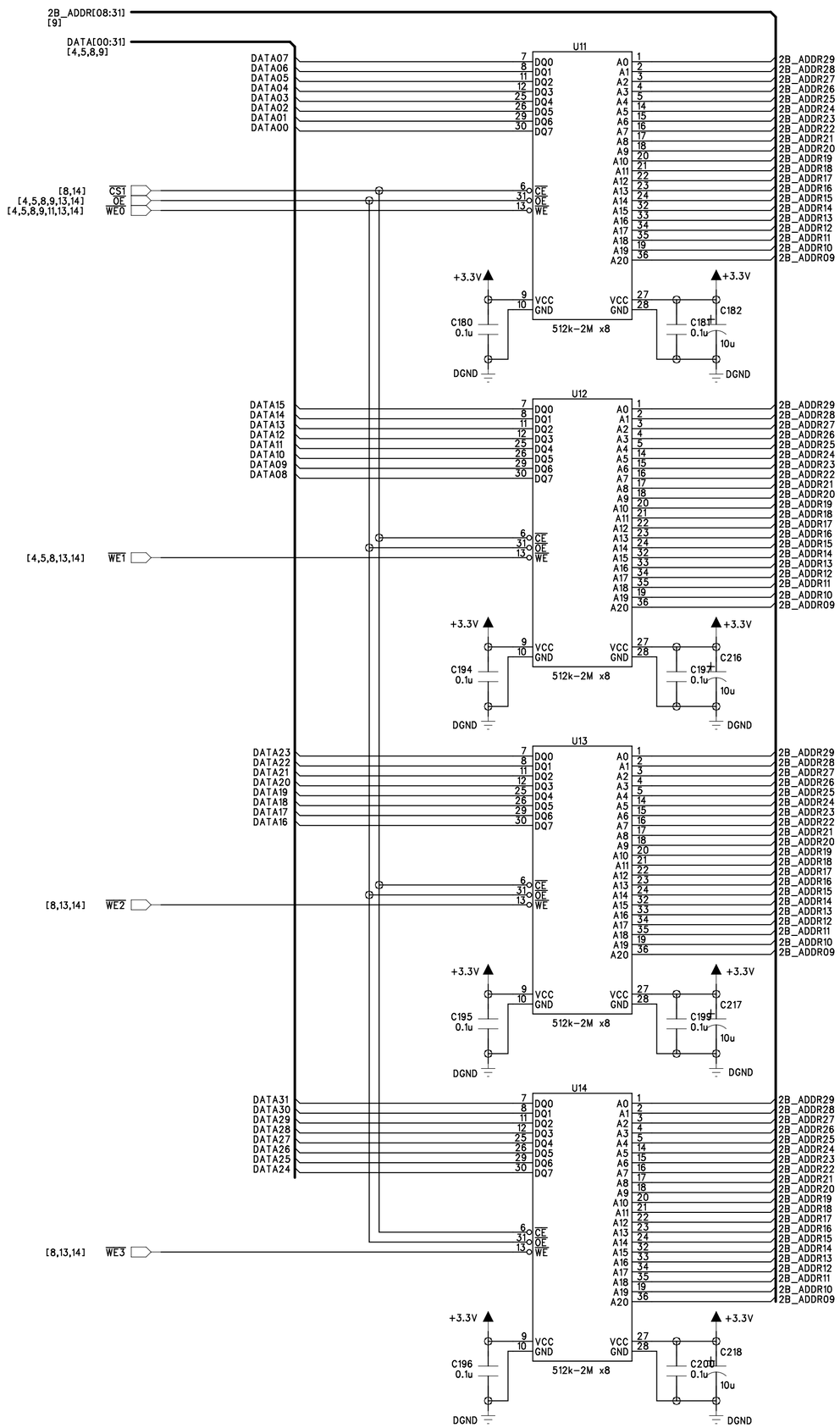

APPROVALS	DATE	COMPRESSOR CONTROLS CORPORATION 4725 121st Street – Des Moines, Iowa 50322			
DRAWN TOM STOLL	10/22/98	SCHEMATIC DRAWING SERIES 5 I/O CARD SRAM			
CHECKED DAN CRAWFORD	05/27/04				
ENGINEER TOM STOLL	11/28/01	SIZE C	DWG. NO. 18-550555-001/002	SHEET 12 OF 23	PROD REV. L1
			FILE IOCARD_L1.SCH	SCALE NONE	

THIS DOCUMENT CONTAINS PROPRIETARY INFORMATION AND SUCH INFORMATION MAY NOT BE DISCLOSED TO OTHERS FOR ANY PURPOSE NOR FOR MANUFACTURING PURPOSES WITHOUT WRITTEN PERMISSION FROM COMPRESSOR CONTROLS CORP.

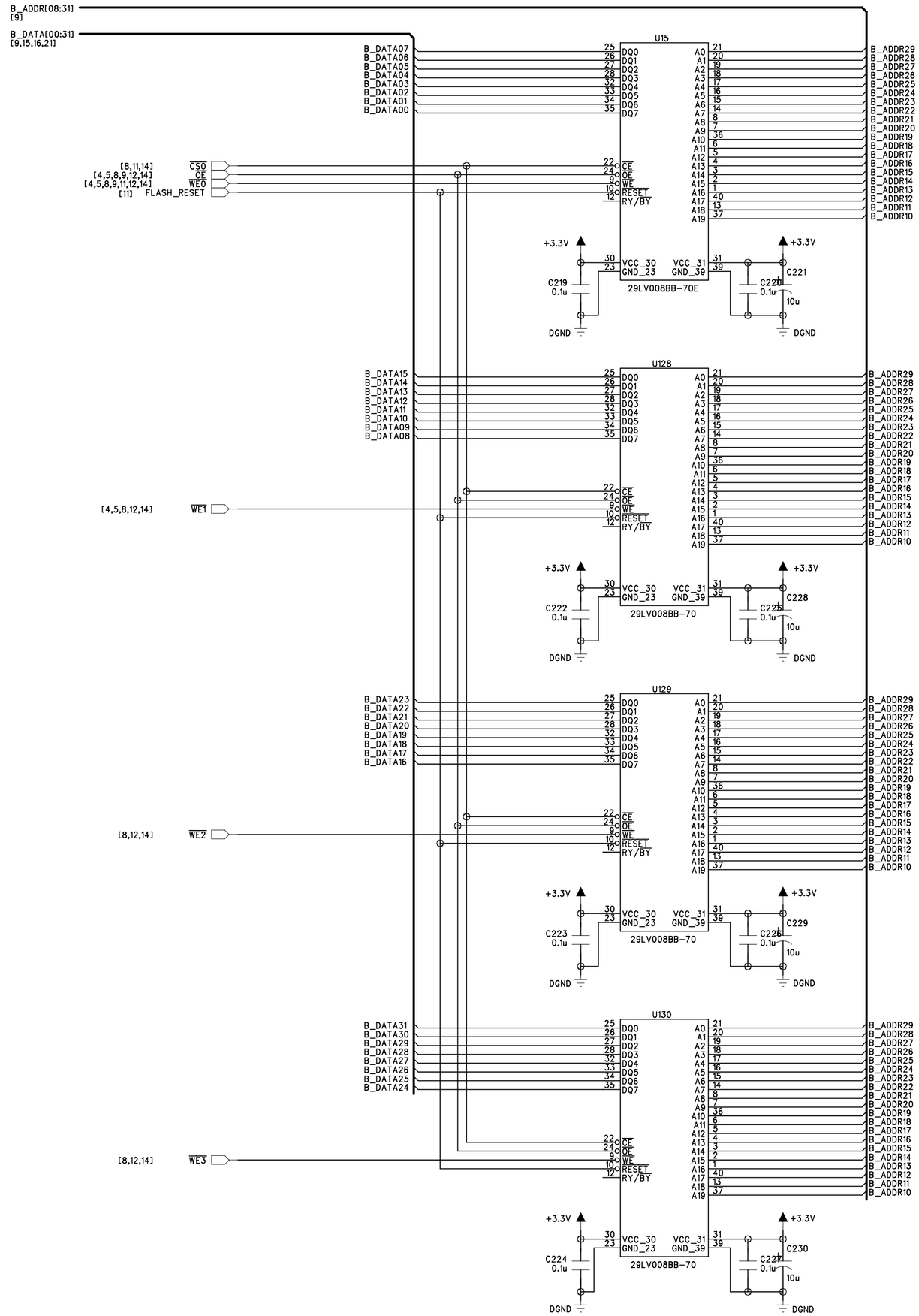

APPROVALS	DATE	COMPRESSOR CONTROLS CORPORATION 4725 121st Street – Des Moines, Iowa 50322			
DRAWN TOM STOLL	10/22/98	SCHEMATIC DRAWING SERIES 5 I/O CARD FLASH			
CHECKED DAN CRAWFORD	05/27/04				
ENGINEER TOM STOLL	11/28/01	SIZE C	DWG. NO. 18-550555-001/002	SHEET 13 OF 23	PROD REV. L1
			FILE IOCARD_L1.SCH	SCALE NONE	

THIS DOCUMENT CONTAINS PROPRIETARY INFORMATION AND SUCH INFORMATION MAY NOT BE DISCLOSED TO OTHERS FOR ANY PURPOSE NOR FOR MANUFACTURING PURPOSES WITHOUT WRITTEN PERMISSION FROM COMPRESSOR CONTROLS CORP.

NOTE: LA1 AND LA2 NOT INSTALLED

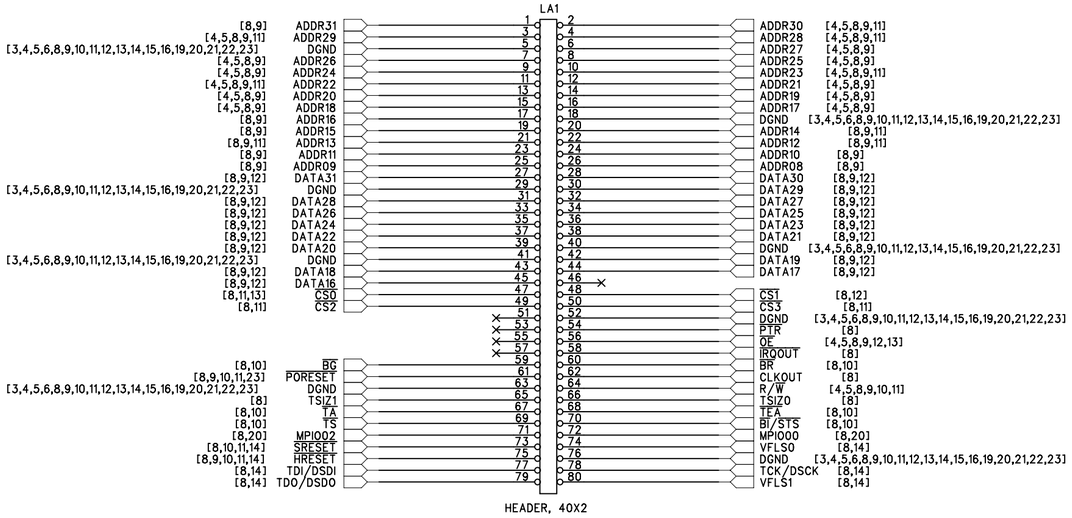

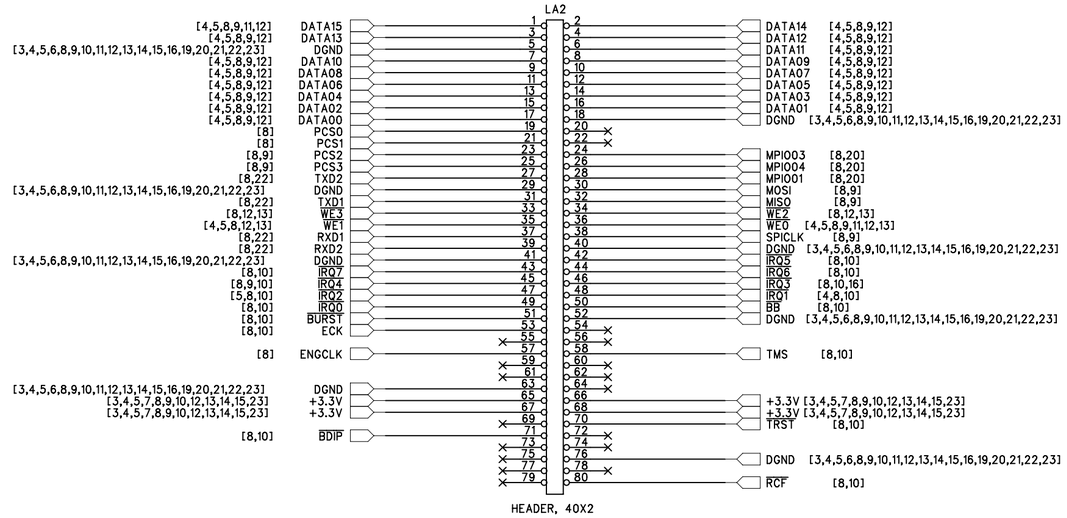

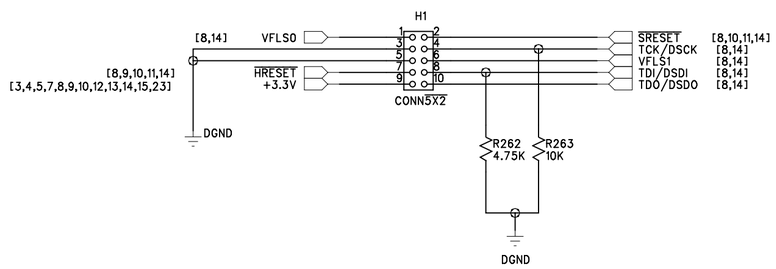

APPROVALS	DATE	COMPRESSOR CONTROLS CORPORATION 4725 121st Street – Des Moines, Iowa 50322			
DRAWN TOM STOLL	10/22/98	SCHEMATIC DRAWING SERIES 5 I/O CARD LOGIC ANALYZER AND BDM CONNECTORS			
CHECKED DAN CRAWFORD	05/27/04				
ENGINEER TOM STOLL	01/16/02	SIZE C	DWG. NO. 18-550555-001/002	SHEET 14 OF 23	PROD REV. L1
			FILE IOCARD_L1.SCH	SCALE NONE	

THIS DOCUMENT CONTAINS PROPRIETARY INFORMATION AND SUCH INFORMATION MAY NOT BE DISCLOSED TO OTHERS FOR ANY PURPOSE NOR FOR MANUFACTURING PURPOSES WITHOUT WRITTEN PERMISSION FROM COMPRESSOR CONTROLS CORP.

DWG. NO.	SH	REV.
18-550555-001/002	15	L1

Io = (Vin * 5) / Rspan
Offset ~ Vin / Roffset

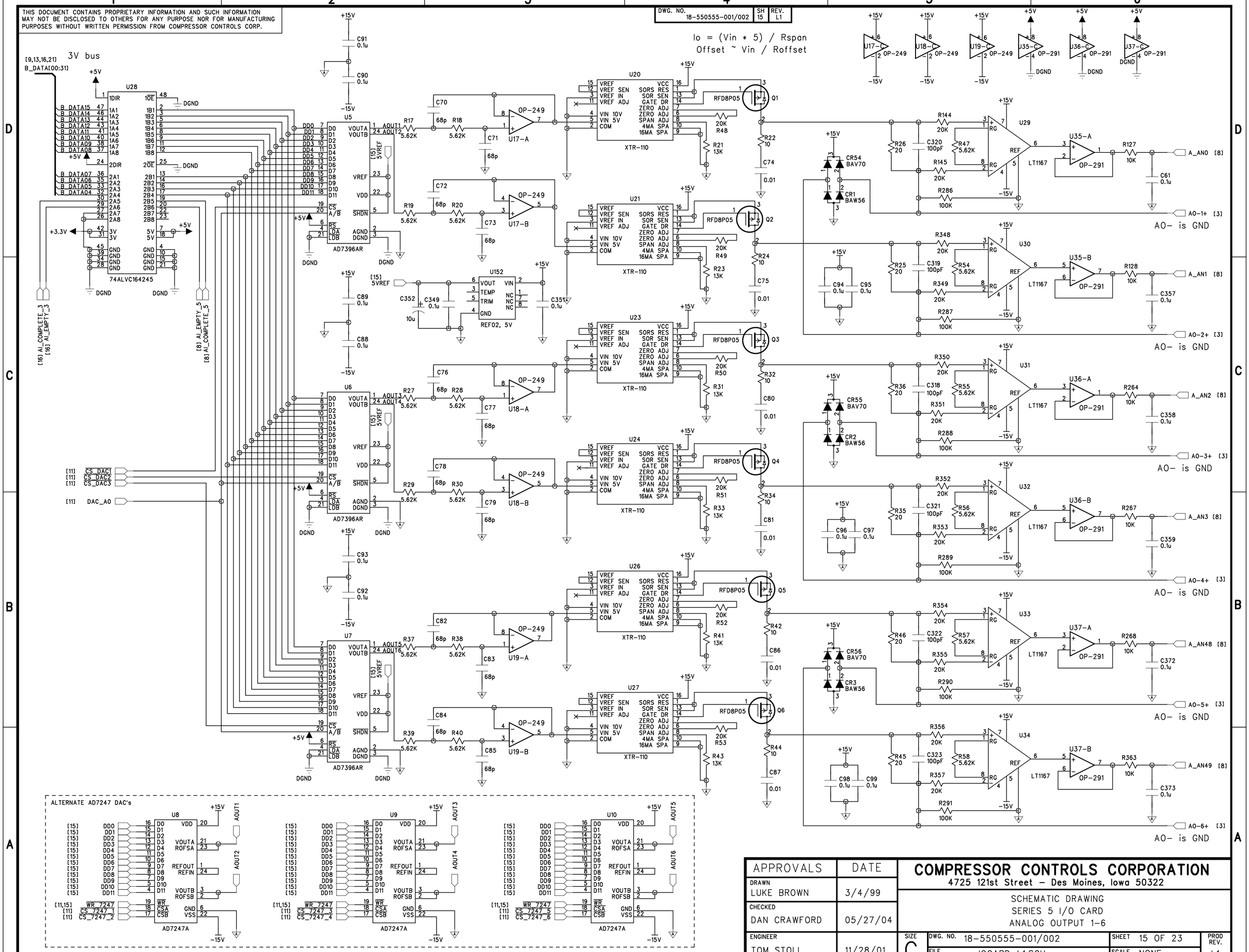

APPROVALS	DATE
DRAWN LUKE BROWN	3/4/99
CHECKED DAN CRAWFORD	05/27/04
ENGINEER TOM STOLL	11/28/01

COMPRESSOR CONTROLS CORPORATION
4725 121st Street – Des Moines, Iowa 50322

SCHEMATIC DRAWING
SERIES 5 I/O CARD
ANALOG OUTPUT 1-6

SIZE	DWG. NO.	SHEET	PROD REV.
C	18-550555-001/002	15 OF 23	L1
	FILE IOCARD_L1.SCH	SCALE NONE	

THIS DOCUMENT CONTAINS PROPRIETARY INFORMATION AND SUCH INFORMATION MAY NOT BE DISCLOSED TO OTHERS FOR ANY PURPOSE NOR FOR MANUFACTURING PURPOSES WITHOUT WRITTEN PERMISSION FROM COMPRESSOR CONTROLS CORP.

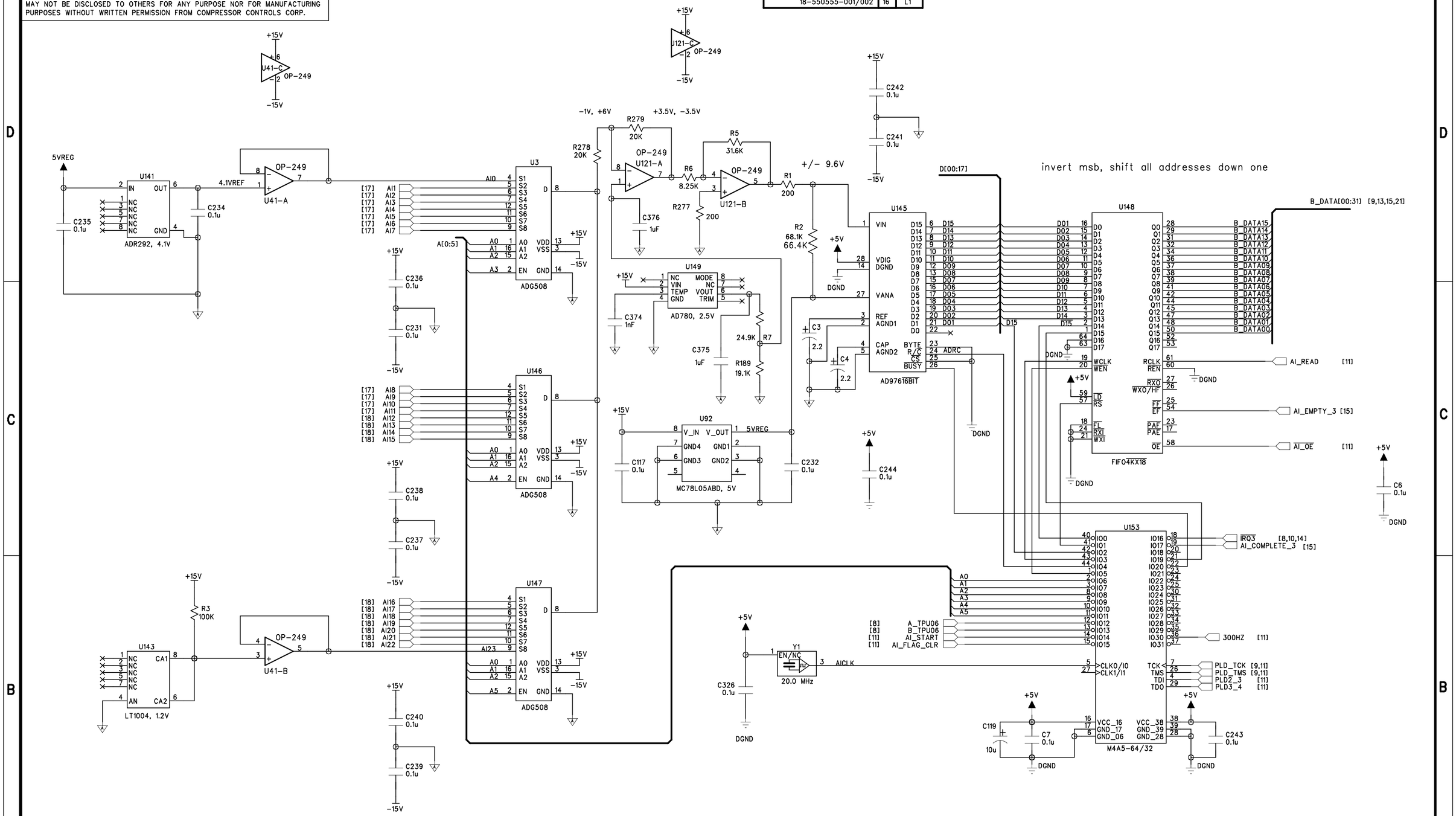

Ch	A0	A1	A2	EN1	EN2	EN3
1	0	0	0	1	0	0
2	0	0	1	1	0	0
3	0	1	0	1	0	0
4	0	1	1	1	0	0
5	1	0	0	1	0	0
6	1	0	1	1	0	0
7	1	1	0	1	0	0
8	1	1	1	1	0	0
9	0	0	0	0	1	0
10	0	0	1	0	1	0
11	0	1	0	0	1	0
12	0	1	1	0	1	0
13	1	0	0	0	1	0
14	1	0	1	0	1	0
15	1	1	0	0	1	0
16	1	1	1	0	1	0
17	0	0	0	0	0	1
18	0	0	1	0	0	1
19	0	1	0	0	0	1
20	0	1	1	0	0	1

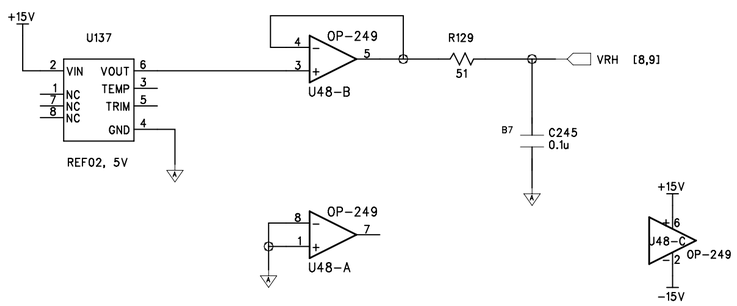

APPROVALS	DATE	COMPRESSOR CONTROLS CORPORATION 4725 121st Street – Des Moines, Iowa 50322			
DRAWN LUKE BROWN	6/17/99	SCHEMATIC DRAWING SERIES 5 I/O CARD ANALOG INPUT CONTROL			
CHECKED DAN CRAWFORD	05/27/04				
ENGINEER LUKE BROWN	10/05/00	SIZE C	DWG. NO. 18-550555-001/002	SHEET 16 OF 23	PROD REV. L1
			FILE IOCARD_L1.SCH	SCALE NONE	

THIS DOCUMENT CONTAINS PROPRIETARY INFORMATION AND SUCH INFORMATION MAY NOT BE DISCLOSED TO OTHERS FOR ANY PURPOSE NOR FOR MANUFACTURING PURPOSES WITHOUT WRITTEN PERMISSION FROM COMPRESSOR CONTROLS CORP.

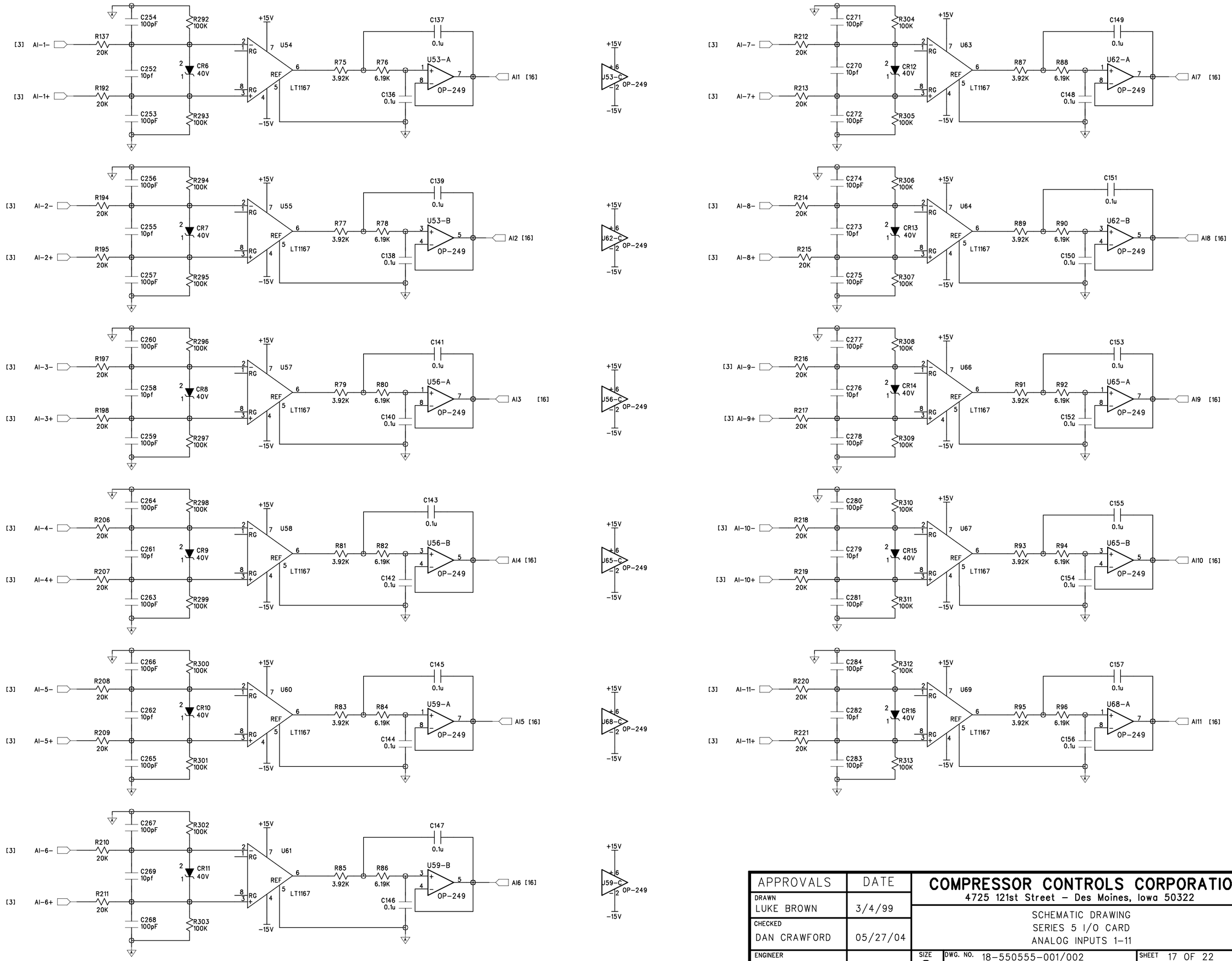

APPROVALS	DATE	COMPRESSOR CONTROLS CORPORATION 4725 121st Street – Des Moines, Iowa 50322			
DRAWN LUKE BROWN	3/4/99	SCHEMATIC DRAWING SERIES 5 I/O CARD ANALOG INPUTS 1-11			
CHECKED DAN CRAWFORD	05/27/04				
ENGINEER LUKE BROWN	7/22/99	SIZE C	DWG. NO. 18-550555-001/002	SHEET 17 OF 22	PROD REV. L1
			FILE IOCARD_L1.SCH	SCALE NONE	

THIS DOCUMENT CONTAINS PROPRIETARY INFORMATION AND SUCH INFORMATION MAY NOT BE DISCLOSED TO OTHERS FOR ANY PURPOSE NOR FOR MANUFACTURING PURPOSES WITHOUT WRITTEN PERMISSION FROM COMPRESSOR CONTROLS CORP.

DWG. NO.	SH	REV.
18-550555-001/002	18	L1

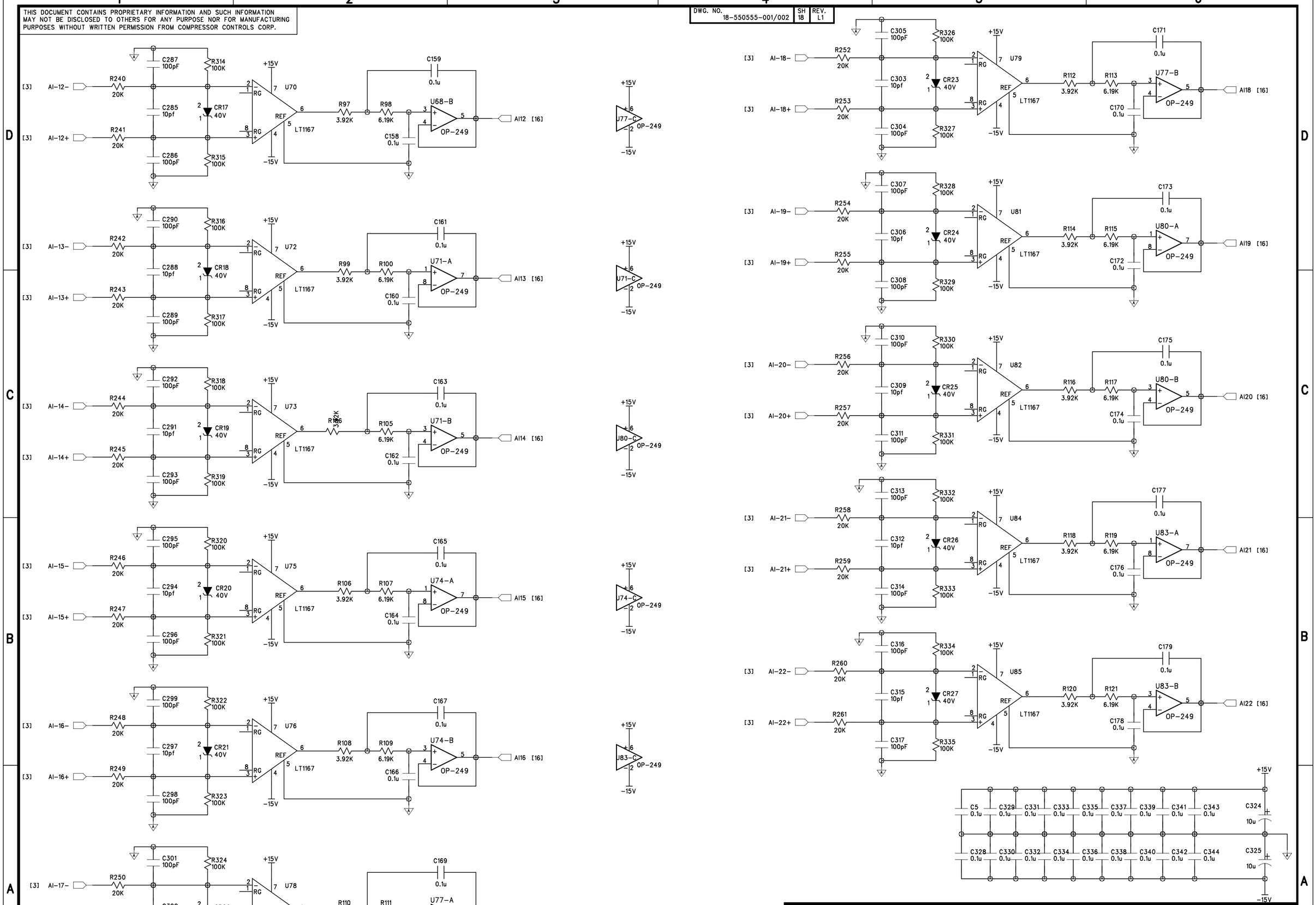

APPROVALS	DATE
DRAWN LUKE BROWN	3/4/99
CHECKED DAN CRAWFORD	05/27/04
ENGINEER LUKE BROWN	7/22/99

COMPRESSOR CONTROLS CORPORATION
4725 121st Street – Des Moines, Iowa 50322

SCHEMATIC DRAWING
SERIES 5 I/O CARD
ANALOG INPUTS 12-22

SIZE	DWG. NO.	SHEET	PROD REV.
C	18-550555-001/002	18 OF 23	L1
	FILE IOCARD_L1.SCH	SCALE NONE	

THIS DOCUMENT CONTAINS PROPRIETARY INFORMATION AND SUCH INFORMATION MAY NOT BE DISCLOSED TO OTHERS FOR ANY PURPOSE NOR FOR MANUFACTURING PURPOSES WITHOUT WRITTEN PERMISSION FROM COMPRESSOR CONTROLS CORP.

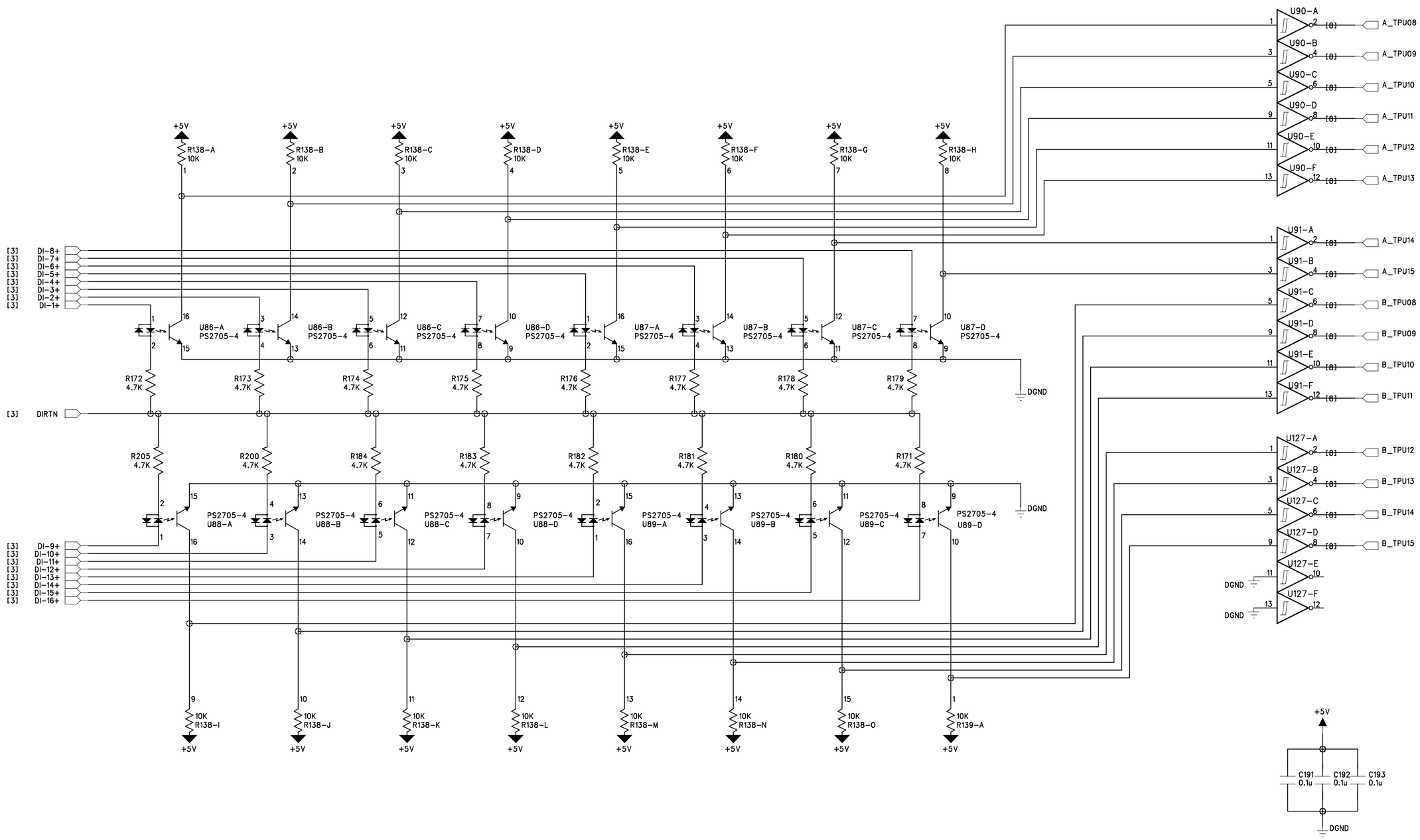

APPROVALS	DATE	COMPRESSOR CONTROLS CORPORATION 4725 121st Street – Des Moines, Iowa 50322			
DRAWN BORIS KAZATSKER	10/22/98	SCHEMATIC DRAWING SERIES 5 I/O CARD DIGITAL INPUTS			
CHECKED DAN CRAWFORD	05/27/04				
ENGINEER BORIS KAZATSKER	7/22/99	SIZE C	DWG. NO. 18-550555-001/002	SHEET 19 OF 23	PROD REV. L1
			FILE IOCARD_L1.SCH	SCALE NONE	

THIS DOCUMENT CONTAINS PROPRIETARY INFORMATION AND SUCH INFORMATION MAY NOT BE DISCLOSED TO OTHERS FOR ANY PURPOSE NOR FOR MANUFACTURING PURPOSES WITHOUT WRITTEN PERMISSION FROM COMPRESSOR CONTROLS CORP.

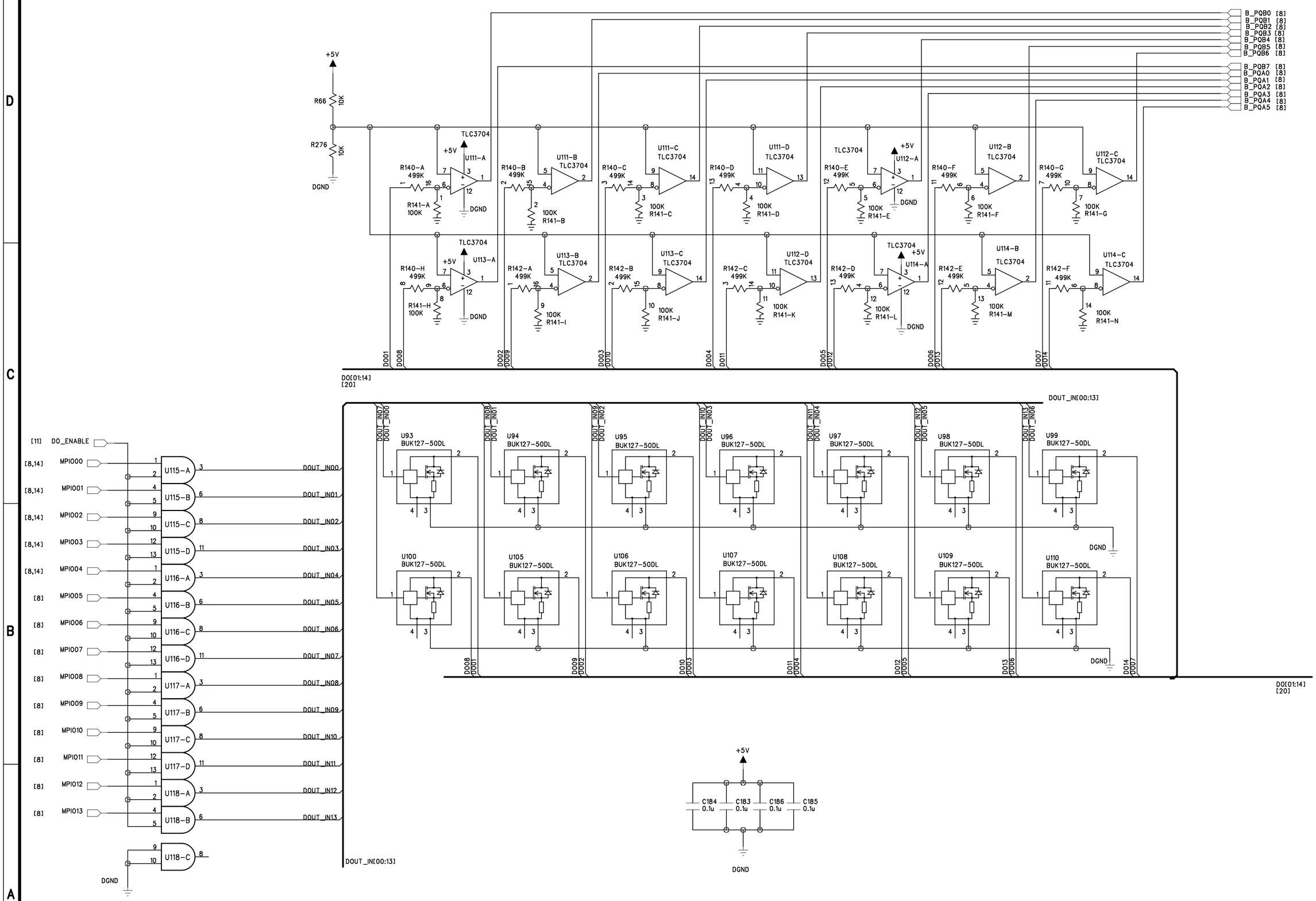

APPROVALS	DATE	COMPRESSOR CONTROLS CORPORATION 4725 121st Street – Des Moines, Iowa 50322			
DRAWN BORIS KAZATSKER	10/22/98	SCHEMATIC DRAWING SERIES 5 I/O CARD DIGITAL OUTPUTS			
CHECKED DAN CRAWFORD	05/27/04				
ENGINEER BORIS KAZATSKER	7/22/99	SIZE C	DWG. NO. 18-550555-001/002	SHEET 20 OF 23	PROD REV. L1
			FILE IOCARD_L1.SCH	SCALE NONE	

THIS DOCUMENT CONTAINS PROPRIETARY INFORMATION AND SUCH INFORMATION MAY NOT BE DISCLOSED TO OTHERS FOR ANY PURPOSE NOR FOR MANUFACTURING PURPOSES WITHOUT WRITTEN PERMISSION FROM COMPRESSOR CONTROLS CORP.

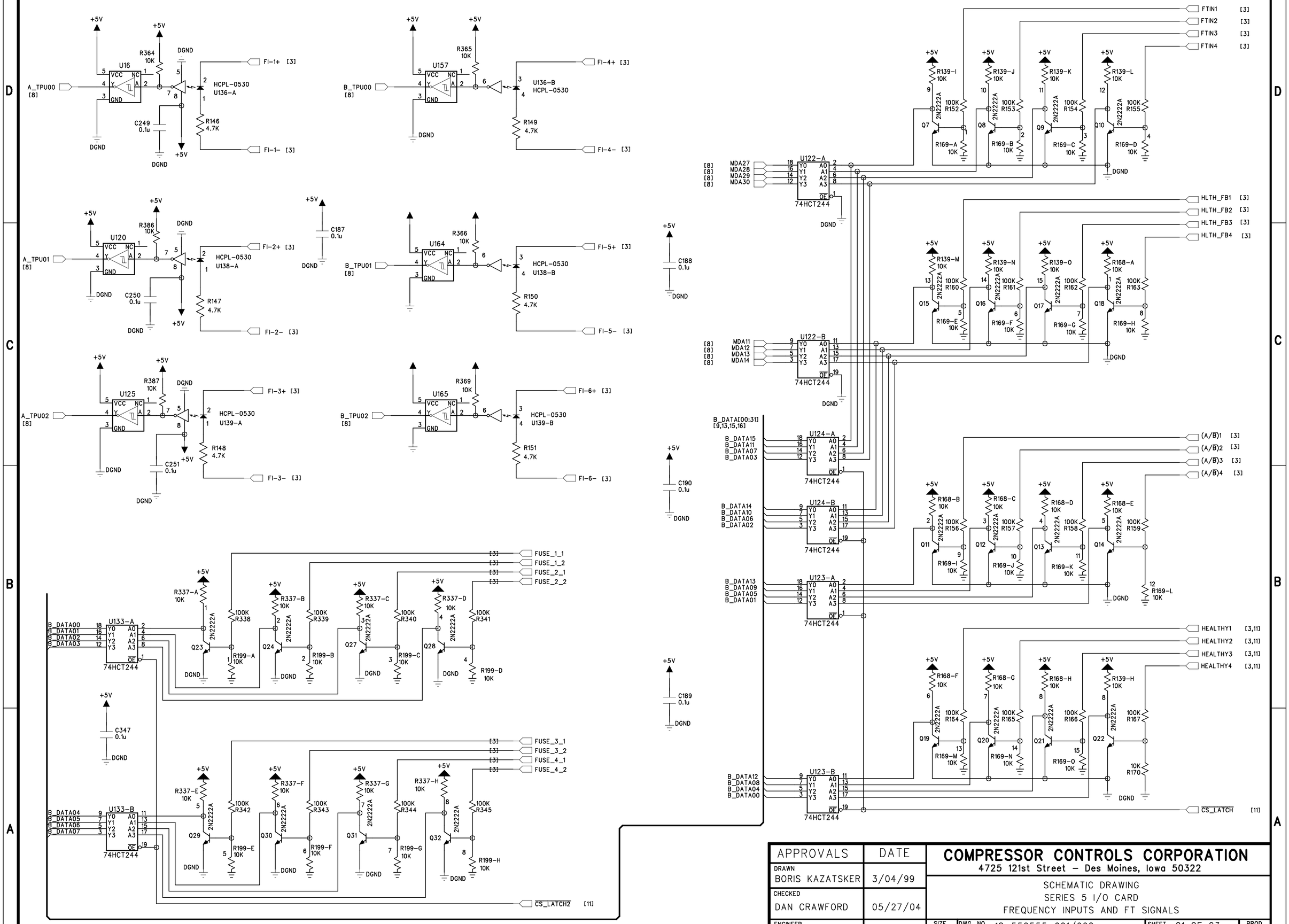

APPROVALS	DATE
DRAWN BORIS KAZATSKER	3/04/99
CHECKED DAN CRAWFORD	05/27/04
ENGINEER BORIS KAZATSKER	3/30/00

COMPRESSOR CONTROLS CORPORATION
4725 121st Street – Des Moines, Iowa 50322

SCHEMATIC DRAWING
SERIES 5 I/O CARD
FREQUENCY INPUTS AND FT SIGNALS

SIZE	DWG. NO.	SHEET	PROD REV.
C	18-550555-001/002	21 OF 23	L1
	FILE IOCARD_L1.SCH	SCALE NONE	

THIS DOCUMENT CONTAINS PROPRIETARY INFORMATION AND SUCH INFORMATION MAY NOT BE DISCLOSED TO OTHERS FOR ANY PURPOSE NOR FOR MANUFACTURING PURPOSES WITHOUT WRITTEN PERMISSION FROM COMPRESSOR CONTROLS CORP.

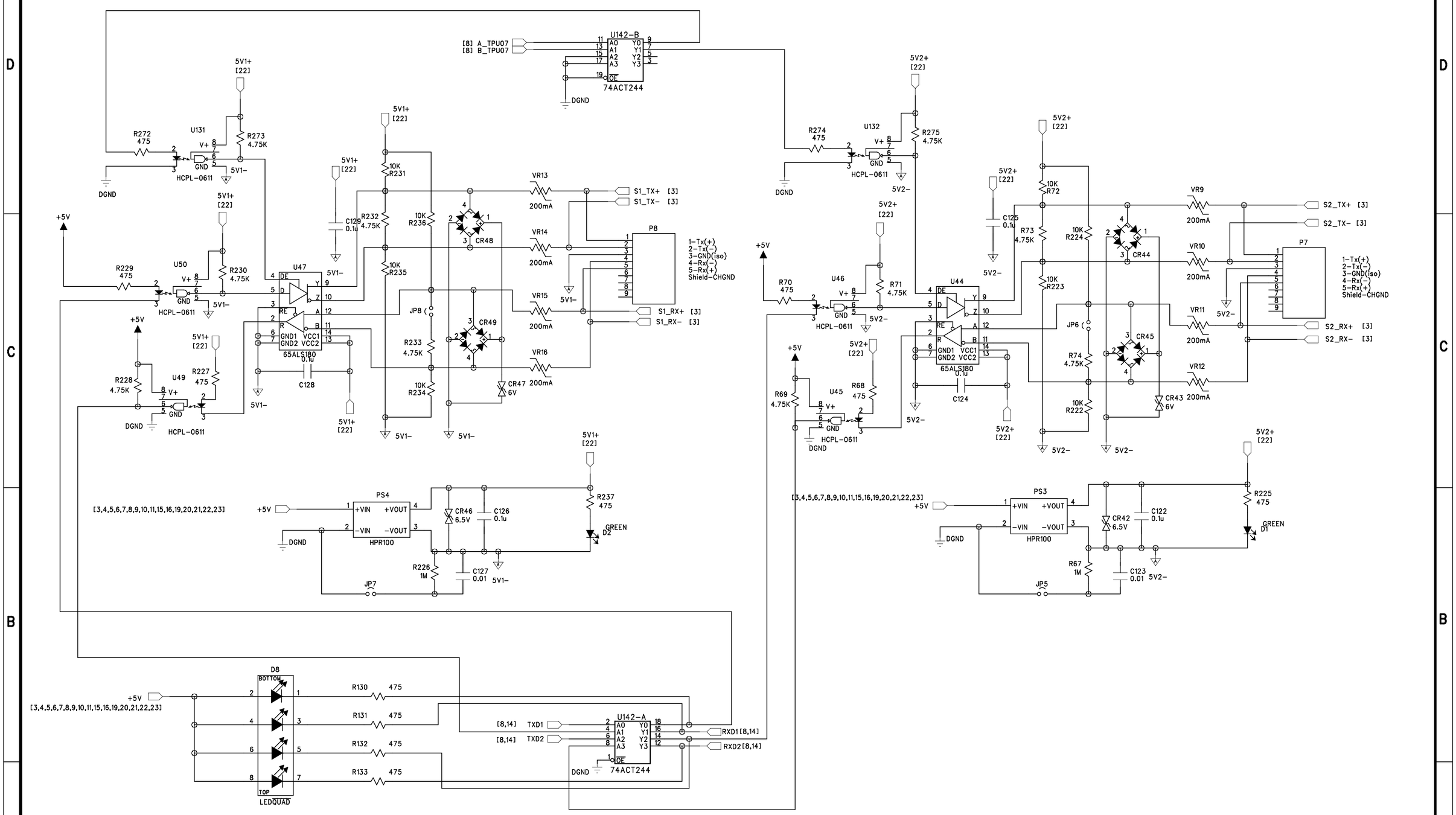

APPROVALS	DATE	COMPRESSOR CONTROLS CORPORATION 4725 121st Street – Des Moines, Iowa 50322			
DRAWN BORIS KAZATSKER	10/22/98	SCHEMATIC DRAWING SERIES 5 I/O CARD SERIAL COMMUNICATIONS			
CHECKED DAN CRAWFORD	05/27/04				
ENGINEER BORIS KAZATSKER	08/05/02	SIZE C	DWG. NO. 18-550555-001/002	SHEET 22 OF 23	PROD REV.
			FILE IOCARD_L1.SCH	SCALE NONE	L1

THIS DOCUMENT CONTAINS PROPRIETARY INFORMATION AND SUCH INFORMATION MAY NOT BE DISCLOSED TO OTHERS FOR ANY PURPOSE NOR FOR MANUFACTURING PURPOSES WITHOUT WRITTEN PERMISSION FROM COMPRESSOR CONTROLS CORP.

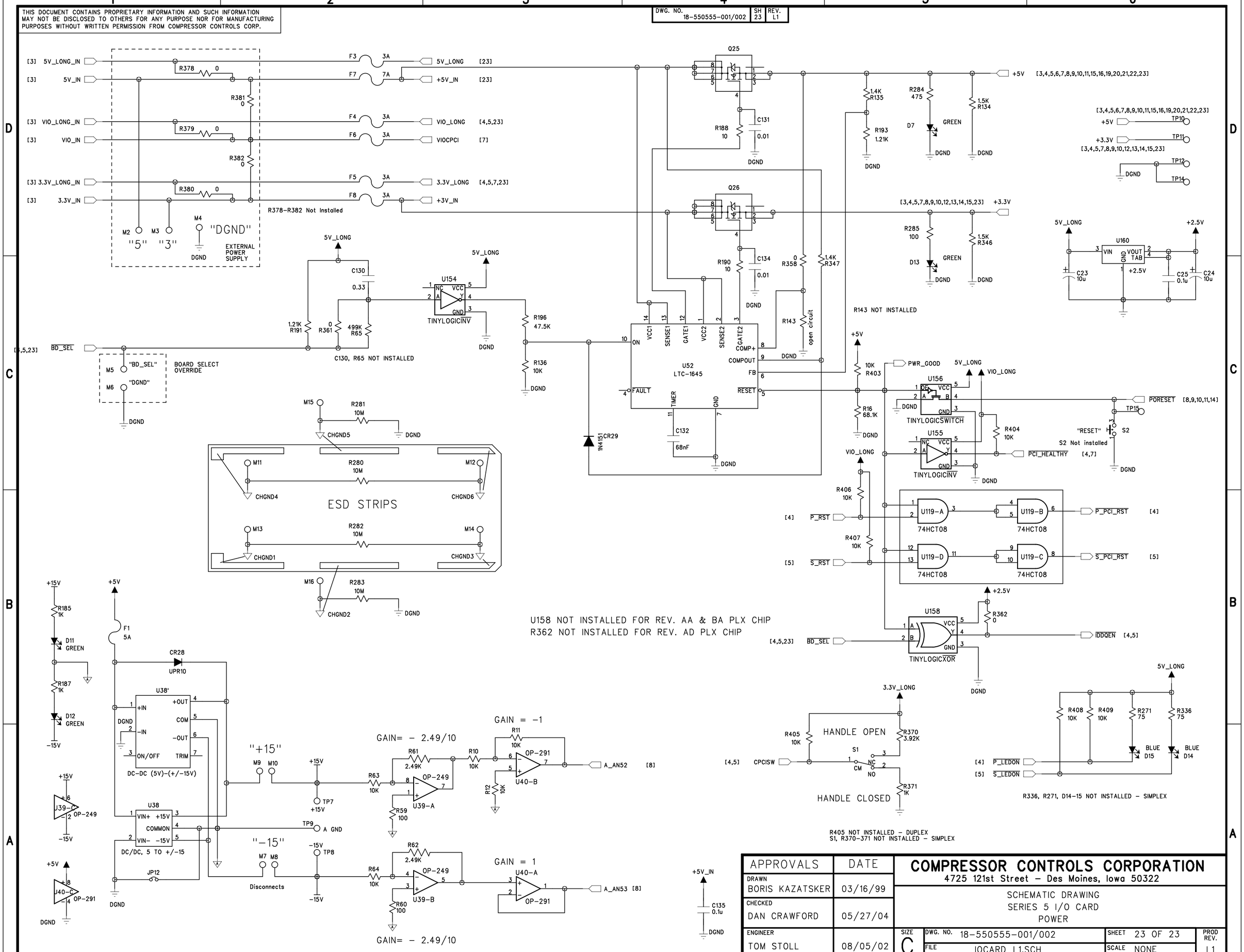

APPROVALS	DATE
DRAWN BORIS KAZATSKER	03/16/99
CHECKED DAN CRAWFORD	05/27/04
ENGINEER TOM STOLL	08/05/02

COMPRESSOR CONTROLS CORPORATION
4725 121st Street - Des Moines, Iowa 50322

SCHEMATIC DRAWING
SERIES 5 I/O CARD
POWER

SIZE	DWG. NO.	SHEET	PROD REV.
C	18-550555-001/002	23 OF 23	
	FILE IOCARD_L1.SCH	SCALE NONE	L1