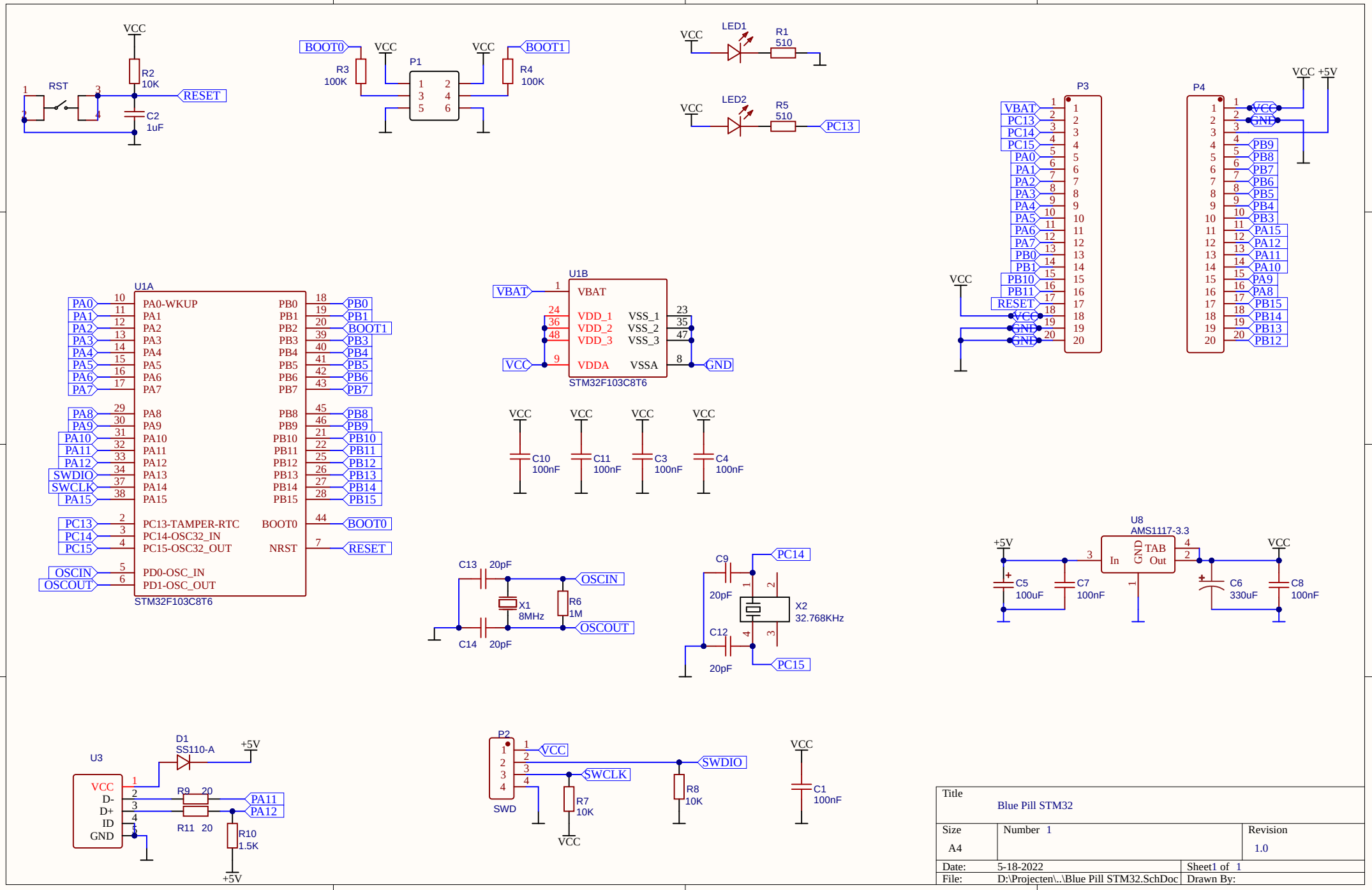

Title	Blue Pill STM32	
Size A4	Number 1	Revision 1.0
Date: 5-18-2022		Sheet1 of 1
File: D:\Projecten\..\Blue Pill STM32.SchDoc		Drawn By: