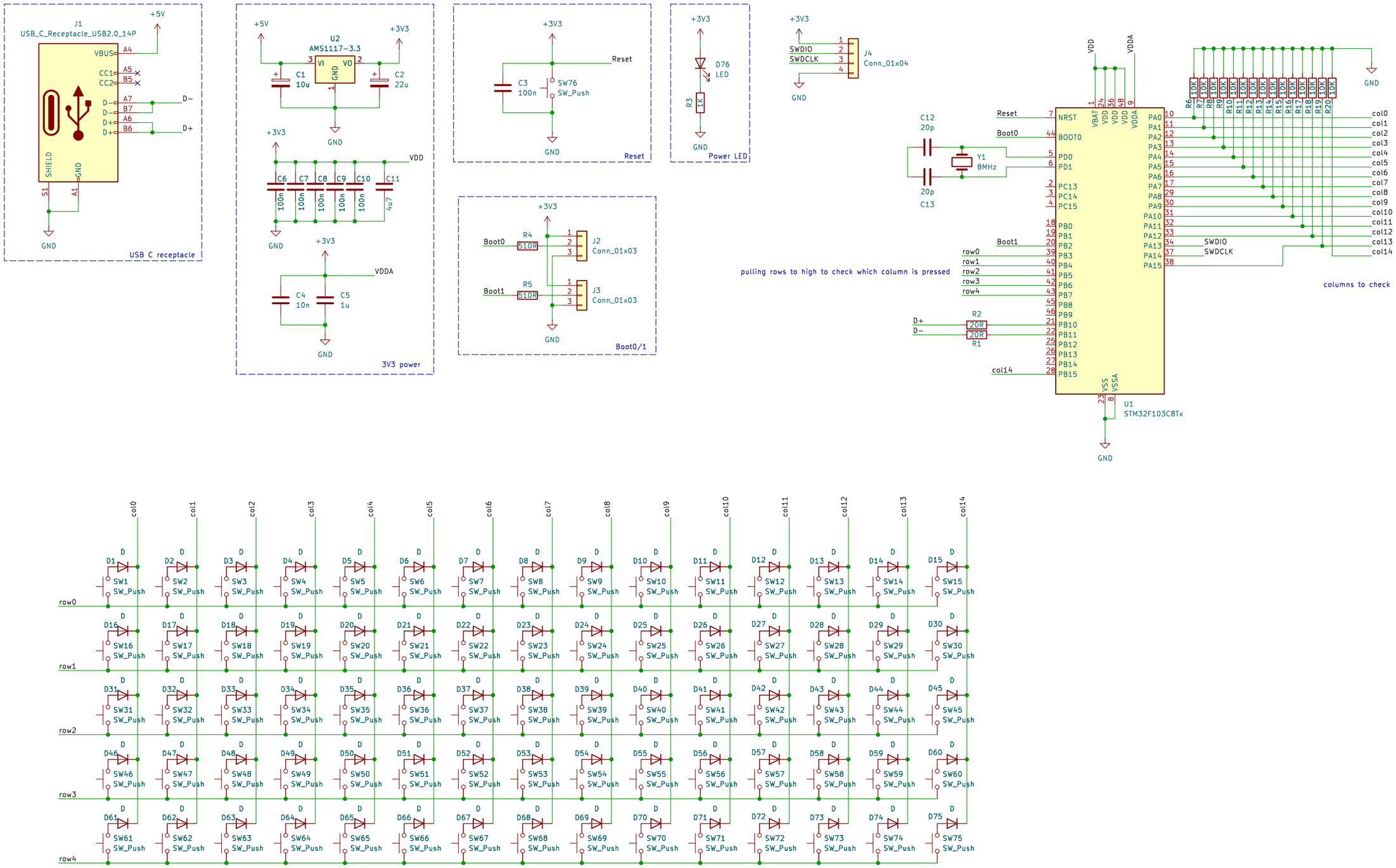

Schmacksby

Sheet: /

File: Keyboard.kicad_sch

Title: Keyboard

Size: A3	Date: 2024-06-06	**Rev: 0.1**
KiCad E.D.A. 8.0.1		Id: 1/1