third edition

Data Communications and Networking

Behrouz A. Forouzan

Copyrighted material

DATA COMMUNICATIONS AND NETWORKING

Third Edition

Behrouz A. Forouzan

DeAnza College

with

Sophia Chung Fegan

McGraw Hill Higher Education

Boston Burr Ridge, IL Dubuque, IA Madison, WI New York San Francisco St. Louis
Bangkok Bogotá Caracas Kuala Lumpur Lisbon London Madrid Mexico City
Milan Montreal New Delhi Santiago Seoul Singapore Sydney Taipei Toronto

Copyrighted material

Table of Contents

Preface to the Third Edition *xxix*

Part 1 **Overview of Data Communications and Networking** **1**

Chapter 1 *Introduction* *3*

1.1 DATA COMMUNICATIONS 3
- Components 4
- Data Representation 5
- Direction of Data Flow 6

1.2 NETWORKS 8
- Distributed Processing 8
- Network Criteria 8
- Physical Structures 8
- Categories of Networks 13

1.3 THE INTERNET 15
- A Brief History 15
- The Internet Today 16

1.4 PROTOCOLS AND STANDARDS 18
- Protocols 18
- Standards 18
- Standards Organizations 19
- Internet Standards 20

1.5 KEY TERMS 20

1.6 SUMMARY 21

1.7 PRACTICE SET 22
- Review Questions 22
- Multiple-Choice Questions 23
- Exercises 25

Chapter 2 *Network Models* *27*

2.1 LAYERED TASKS 27
- Sender, Receiver, and Carrier 27

Copyrighted material

Hierarchy 28
Services 29
2.2 INTERNET MODEL 29
Peer-to-Peer Processes 30
Functions of Layers 31
Summary of Layers 39
2.3 OSI MODEL 40
2.4 KEY TERMS 41
2.5 SUMMARY 41
2.6 PRACTICE SET 42
Review Questions 42
Multiple-Choice Questions 42
Exercises 44

Part 2 Physical Layer 45

Chapter 3 *Signals 49*

3.1 ANALOG AND DIGITAL 49
Analog and Digital Data 49
Analog and Digital Signals 49
Periodic and Aperiodic Signals 50
3.2 ANALOG SIGNALS 50
Sine Wave 51
Phase 54
Examples of Sine Waves 54
Time and Frequency Domains 54
Composite Signals 56
Bandwidth 59
3.3 DIGITAL SIGNALS 62
Bit Interval and Bit Rate 62
Digital Signal as a Composite Analog Signal 63
Digital Signal Through a Wide-Bandwidth Medium 63
Digital Signal Through a Band-Limited Medium 63
Digital versus Analog Bandwidth 65
Higher Bit Rate 66
3.4 ANALOG VERSUS DIGITAL 66
Low-pass versus Band-pass 66
Digital Transmission 66
Analog Transmission 67
3.5 DATA RATE LIMITS 67
Noiseless Channel: Nyquist Bit Rate 67
Noisy Channel: Shannon Capacity 68
Using Both Limits 69
3.6 TRANSMISSION IMPAIRMENT 69
Attenuation 69
Distortion 71
Noise 71

Copyrighted material

3.7 MORE ABOUT SIGNALS 72
Throughput 72
Propagation Speed 72
Propagation Time 73
Wavelength 73
3.8 KEY TERMS 74
3.9 SUMMARY 75
3.10 PRACTICE SET 75
Review Questions 75
Multiple-Choice Questions 76
Exercises 80

Chapter 4 *Digital Transmission 85*

4.1 LINE CODING 85
Some Characteristics of Line Coding 85
Line Coding Schemes 88
Some Other Schemes 94
4.2 BLOCK CODING 95
Steps in Transformation 96
Some Common Block Codes 97
4.3 SAMPLING 98
Pulse Amplitude Modulation (PAM) 99
Pulse Code Modulation 99
Sampling Rate: Nyquist Theorem 101
How Many Bits per Sample? 102
Bit Rate 103
4.4 TRANSMISSION MODE 103
Parallel Transmission 104
Serial Transmission 104
4.5 KEY TERMS 107
4.6 SUMMARY 108
4.7 PRACTICE SET 108
Review Questions 108
Multiple-Choice Questions 109
Exercises 112

Chapter 5 *Analog Transmission 115*

5.1 MODULATION OF DIGITAL DATA 115
Aspects of Digital-to-Analog Conversion 116
Amplitude Shift Keying (ASK) 117
Frequency Shift Keying (FSK) 120
Phase Shift Keying (PSK) 122
Quadrature Amplitude Modulation (QAM) 125
Bit/Baud Comparison 127
5.2 TELEPHONE MODEMS 128
Modem Standards 130
5.3 MODULATION OF ANALOG SIGNALS 133
Amplitude Modulation (AM) 134

Copyrighted material

Frequency Modulation (FM) 136
Phase Modulation (PM) 138
5.4 KEY TERMS 138
5.5 SUMMARY 139
5.6 PRACTICE SET 140
Review Questions 140
Multiple-Choice Questions 141
Exercises 145

Chapter 6 *Multiplexing 149*

6.1 FDM 150
Multiplexing Process 151
Demultiplexing Process 151
The Analog Hierarchy 153
Other Applications of FDM 155
Implementation 155
6.2 WDM 155
6.3 TDM 157
Time Slots and Frames 157
Interleaving 158
Synchronizing 160
Bit Padding 161
Digital Signal (DS) Service 162
T Lines 163
Inverse TDM 165
More TDM Applications 165
6.4 KEY TERMS 166
6.5 SUMMARY 166
6.6 PRACTICE SET 167
Review Questions 167
Multiple-Choice Questions 167
Exercises 169

Chapter 7 *Transmission Media 173*

7.1 GUIDED MEDIA 174
Twisted-Pair Cable 174
Coaxial Cable 177
Fiber-Optic Cable 179
7.2 UNGUIDED MEDIA: WIRELESS 184
Radio Waves 186
Microwaves 188
Infrared 189
7.3 KEY TERMS 190
7.4 SUMMARY 190
7.5 PRACTICE SET 191
Review Questions 191

Copyrighted material

Multiple-Choice Questions 192
Exercises 195

Chapter 8 *Circuit Switching and Telephone Network 197*

8.1 CIRCUIT SWITCHING 197
Space-Division Switch 199
Time-Division Switch 201
TDM Bus 203
Space- and Time-Division Switch Combinations 203
8.2 TELEPHONE NETWORK 204
Major Components 204
LATAs 205
Making a Connection 207
Analog Services 208
Digital Services 209
A Brief History 210
8.3 KEY TERMS 211
8.4 SUMMARY 211
8.5 PRACTICE SET 212
Review Questions 212
Multiple-Choice Questions 213
Exercises 215

Chapter 9 *High-Speed Digital Access: DSL, Cable Modems, and SONET 219*

9.1 DSL TECHNOLOGY 219
ADSL 219
Other DSL Technologies 222
9.2 CABLE MODEM 223
Traditional Cable Networks 223
HFC Network 224
Sharing 226
CM and CMTS 226
Data Transmission Schemes: DOCSIS 227
9.3 SONET 228
SONET Devices 229
SONET Frame 229
Frame Transmission 230
Synchronous Transport Signals 230
STS-1 230
Virtual Tributaries 231
Higher-Rate Services 232
9.4 KEY TERMS 232
9.5 SUMMARY 233
9.6 PRACTICE SET 234
Review Questions 234
Multiple-Choice Questions 234
Exercises 237

Copyrighted material

Part 3 Data Link Layer 239

Chapter 10 *Error Detection and Correction* 243

10.1 TYPES OF ERRORS 243
Single-Bit Error 243
Burst Error 244
10.2 DETECTION 245
Redundancy 245
Parity Check 246
Cyclic Redundancy Check (CRC) 249
Checksum 253
10.3 ERROR CORRECTION 256
Error Correction by Retransmission 256
Forward Error Correction 256
Burst Error Correction 260
10.4 KEY TERMS 260
10.5 SUMMARY 261
10.6 PRACTICE SET 261
Review Questions 261
Multiple-Choice Questions 262
Exercises 265

Chapter 11 *Data Link Control and Protocols* 267

11.1 FLOW AND ERROR CONTROL 267
Flow Control 267
Error Control 268
Flow and Error Control Mechanisms 268
11.2 STOP-AND-WAIT ARQ 268
Operation 269
Bidirectional Transmission 272
11.3 GO-BACK-*N* ARQ 272
Sequence Numbers 273
Sender Sliding Window 273
Receiver Sliding Window 274
Control Variables 274
Timers 274
Acknowledgment 275
Resending Frame 275
Operation 275
Sender Window Size 277
Bidirectional Transmission and Piggybacking 277
11.4 SELECTIVE REPEAT ARQ 278
Sender and Receiver Windows 278
Operation 278
Sender Window Size 279
Bidirectional Transmission and Piggybacking 280

Copyrighted material

Bandwidth-Delay Product 280
Pipelining 281
11.5 HDLC 281
Configurations and Transfer Modes 281
Frames 282
Frame Format 282
Frame Type 283
Examples 287
Data Transparency 288
11.6 KEY TERMS 290
11.7 SUMMARY 290
11.8 PRACTICE SET 291
Review Questions 291
Multiple-Choice Questions 291
Exercises 293

Chapter 12 *Point-to-Point Access: PPP 295*

12.1 POINT-TO-POINT PROTOCOL 295
Frame Format 295
Transition States 296
12.2 PPP STACK 297
Link Control Protocol (LCP) 297
Authentication Protocols 300
Network Control Protocol (NCP) 302
An Example 304
12.3 KEY TERMS 305
12.4 SUMMARY 305
12.5 PRACTICE SET 305
Review Questions 305
Multiple-Choice Questions 306
Exercises 308

Chapter 13 *Multiple Access 311*

13.1 RANDOM ACCESS 311
Multiple Access (MA) 312
Carrier Sense Multiple Access (CSMA) 314
CSMA/CD 315
CSMA/CA 316
13.2 CONTROLLED ACCESS 317
Reservation 318
Polling 318
Token Passing 319
13.3 CHANNELIZATION 320
FDMA 321
TDMA 321
CDMA 321
13.4 KEY TERMS 326

Copyrighted material

13.5 SUMMARY 326
13.6 PRACTICE SET 327
Review Questions 327
Multiple-Choice Questions 327
Exercises 330

Chapter 14 *Local Area Networks: Ethernet 333*

14.1 TRADITIONAL ETHERNET 334
MAC Sublayer 334
Physical Layer 337
Physical Layer Implementation 339
Bridged Ethernet 341
Switched Ethernet 342
Full-Duplex Ethernet 343
14.2 FAST ETHERNET 344
Mac Sublayer 344
Physical Layer 345
Physical Layer Implementation 346
14.3 GIGABIT ETHERNET 350
MAC Sublayer 350
Physical Layer 350
Physical Layer Implementation 351
14.4 KEY TERMS 354
14.5 SUMMARY 355
14.6 PRACTICE SET 356
Review Questions 356
Multiple-Choice Questions 356
Exercises 358

Chapter 15 *Wireless LANs 361*

15.1 IEEE 802.11 361
Architecture 361
Physical Layer 363
MAC Layer 365
Addressing Mechanism 370
15.2 BLUETOOTH 372
Architecture 373
Bluetooth Layers 374
Radio Layer 375
Baseband Layer 375
L2CAP 378
Other Upper Layers 379
15.3 KEY TERMS 380
15.4 SUMMARY 380
15.5 PRACTICE SET 381
Review Questions 381
Multiple-Choice Questions 381
Exercises 385

Copyrighted material

Chapter 16 *Connecting LANs, Backbone Networks, and Virtual LANs 387*

16.1 CONNECTING DEVICES 387
Repeaters 387
Hubs 389
Bridges 390
Two-Layer Switch 396
Router and Three-Layer Switches 396
16.2 BACKBONE NETWORKS 396
Bus Backbone 397
Star Backbone 398
Connecting Remote LANs 398
16.3 VIRTUAL LANS 399
Membership 401
Configuration 402
Communication Between Switches 403
IEEE Standard 403
Advantages 403
16.4 KEY TERMS 404
16.5 SUMMARY 404
16.6 PRACTICE SET 405
Review Questions 405
Multiple-Choice Questions 405
Exercises 407

Chapter 17 *Cellular Telephone and Satellite Networks 409*

17.1 CELLULAR TELEPHONY 409
Frequency-Reuse Principle 409
Transmitting 410
Receiving 411
Handoff 411
Roaming 411
First Generation 411
Second Generation 412
Third Generation 419
17.2 SATELLITE NETWORKS 420
Orbits 420
Footprint 421
Three Categories of Satellites 422
GEO Satellites 423
MEO Satellites 424
LEO Satellites 425
17.3 KEY TERMS 428
17.4 SUMMARY 428
17.5 PRACTICE SET 429
Review Questions 429
Multiple-Choice Questions 429
Exercises 433

Copyrighted material

Chapter 18 *Virtual Circuit Switching: Frame Relay and ATM 435*

18.1 VIRTUAL CIRCUIT SWITCHING 435
- Global Addressing 436
- Virtual Circuit Identifier 436
- Three Phases 436
- Data Transfer Phase 437
- Setup Phase 437
- Teardown Phase 440

18.2 FRAME RELAY 441
- Architecture 442
- Frame Relay Layers 443
- FRADs 444
- VOFR 445
- LMI 445
- Congestion Control and Quality of Service 446

18.3 ATM 446
- Design Goals 446
- Problems 446
- Architecture 449
- Switching 452
- ATM Layers 453
- Congestion Control and Quality of Service 459
- ATM LANs 459

18.4 KEY TERMS 460

18.5 SUMMARY 460

18.6 PRACTICE SET 461
- Review Questions 461
- Multiple-Choice Questions 462
- Exercises 464

Part 4 Network Layer 467

Chapter 19 *Host-to-Host Delivery: Internetworking, Addressing, and Routing 471*

19.1 INTERNETWORKS 471
- Need for Network Layer 472
- Internet as a Packet-Switched Network 474
- Internet as a Connectionless Network 476

19.2 ADDRESSING 477
- Internet Address 477
- Classful Addressing 479
- Subnetting 486
- Supernetting 490
- Classless Addressing 491
- Dynamic Address Configuration 492

Copyrighted material

Network Address Translation (NAT) 494
19.3 ROUTING 497
Routing Techniques 497
Static versus Dynamic Routing 499
Routing Table for Classful Addressing 500
Routing Table for Classless Addressing: CIDR 501
19.4 KEY TERMS 503
19.5 SUMMARY 503
19.6 PRACTICE SET 504
Review Questions 504
Multiple-Choice Questions 505
Exercises 508

Chapter 20 *Network Layer Protocols: ARP, IPv4, ICMP, IPv6, and ICMPv6 513*

20.1 ARP 514
Mapping 514
Packet Format 516
Encapsulation 517
Operation 517
20.2 IP 519
Datagram 520
Fragmentation 523
20.3 ICMP 525
Types of Messages 526
20.4 IPV6 528
IPv6 Addresses 529
Categories of Addresses 530
IPv6 Packet Format 531
Fragmentation 532
ICMPv6 532
Transition from IPv4 to IPv6 533
20.5 KEY TERMS 535
20.6 SUMMARY 535
20.7 PRACTICE SET 536
Review Questions 536
Multiple-Choice Questions 537
Exercises 540

Chapter 21 *Unicast and Multicast Routing: Routing Protocols 543*

21.1 UNICAST ROUTING 543
Metric 544
Interior and Exterior Routing 544
21.2 UNICAST ROUTING PROTOCOLS 545
RIP 546
OSPF 548

Copyrighted material

BGP 557
21.3 MULTICAST ROUTING 560
IGMP 561
Multicast Trees 567
MBONE 568
21.4 MULTICAST ROUTING PROTOCOLS 569
DVMRP 570
MOSPF 572
CBT 574
PIM 576
Applications 576
21.5 KEY TERMS 577
21.6 SUMMARY 577
21.7 PRACTICE SET 579
Review Questions 579
Multiple-Choice Questions 579
Exercises 586

Part 5 Transport Layer 589

Chapter 22 *Process-to-Process Delivery: UDP and TCP 593*

22.1 PROCESS-TO-PROCESS DELIVERY 593
Client-Server Paradigm 594
Addressing 594
Multiplexing and Demultiplexing 597
Connectionless versus Connection-Oriented Service 597
Reliable versus Unreliable 600
22.2 USER DATAGRAM PROTOCOL (UDP) 601
Port Numbers 601
User Datagram 601
Applications 602
22.3 TRANSMISSION CONTROL PROTOCOL (TCP) 603
Port Numbers 603
TCP Services 603
Numbering Bytes 606
Sequence Number 607
Segment 608
Connection 609
State Transition Diagram 612
Flow Control 614
Silly Window Syndrome 618
Error Control 619
TCP Timers 621
Congestion Control 624
Other Features 624
22.4 KEY TERMS 625
22.5 SUMMARY 626
22.6 PRACTICE SET 626

Copyrighted material

Review Questions 626
Multiple-Choice Questions 627
Exercises 631

Chapter 23 *Congestion Control and Quality of Service 633*

23.1 DATA TRAFFIC 633
Traffic Descriptor 633
Traffic Profiles 634
23.2 CONGESTION 636
Network Performance 636
23.3 CONGESTION CONTROL 638
Open-Loop Congestion Control 638
Closed-Loop Congestion Control 639
23.4 TWO EXAMPLES 639
Congestion Control in TCP 639
Congestion Control in Frame Relay 641
23.5 QUALITY OF SERVICE 643
Flow Characteristics 643
Flow Classes 644
23.6 TECHNIQUES TO IMPROVE QOS 644
Scheduling 644
Traffic Shaping 646
Resource Reservation 649
Admission Control 649
23.7 INTEGRATED SERVICES 649
Signaling 649
Flow Specification 649
Admission 650
Service Classes 650
RSVP 650
Problems with Integrated Services 653
23.8 DIFFERENTIATED SERVICES 653
23.9 QOS IN SWITCHED NETWORKS 655
QoS in Frame Relay 655
QoS in ATM 657
23.10 KEY TERMS 659
23.11 SUMMARY 660
23.12 PRACTICE SET 660
Review Questions 660
Multiple-Choice Questions 661
Exercises 665

Part 6 Application Layer 667

Chapter 24 *Client-Server Model: Socket Interface 671*

24.1 CLIENT-SERVER MODEL 671

Copyrighted material

Relationship 671
Concurrency 673
Processes 674
24.2 SOCKET INTERFACE 675
Sockets 675
Connectionless Iterative Server 677
Connection-Oriented Concurrent Server 678
Client and Server Programs 680
24.3 KEY TERMS 680
24.4 SUMMARY 680
24.5 PRACTICE SET 681
Review Questions 681
Multiple-Choice Questions 681
Exercises 684

Chapter 25 *Domain Name System (DNS)* 685

25.1 NAME SPACE 685
Flat Name Space 685
Hierarchical Name Space 686
25.2 DOMAIN NAME SPACE 686
Label 686
Domain Name 687
Domain 688
25.3 DISTRIBUTION OF NAME SPACE 689
Hierarchy of Name Servers 689
Zone 689
Root Server 690
Primary and Secondary Servers 690
25.4 DNS IN THE INTERNET 691
Generic Domains 691
Country Domains 693
Inverse Domain 693
25.5 RESOLUTION 694
Resolver 694
Mapping Names to Addresses 695
Mapping Addresses to Names 695
Recursive Resolution 695
Iterative Resolution 696
Caching 696
25.6 DNS MESSAGES 697
Header 697
Question Section 698
Answer Section 698
Authoritative Section 698
Additional Information Section 698
25.7 DDNS 698
25.8 ENCAPSULATION 699
25.9 KEY TERMS 699

Copyrighted material

25.10 SUMMARY 699
25.11 PRACTICE SET 700
Review Questions 700
Multiple-Choice Questions 701
Exercises 703

Chapter 26 *Electronic Mail (SMTP) and File Transfer (FTP) 705*

26.1 ELECTRONIC MAIL 705
Sending Mail 705
Receiving Mail 706
Addresses 706
User Agent (UA) 707
Multipurpose Internet Mail Extensions (MIME) 708
Mail Transfer Agent (MTA) 714
Mail Delivery 715
Mail Access Protocols 717
Web-Based Mail 718
26.2 FILE TRANSFER 718
Connections 720
Communication 720
File Transfer 722
User Interface 723
Anonymous FTP 724
26.3 KEY TERMS 725
26.4 SUMMARY 725
26.5 PRACTICE SET 726
Review Questions 726
Multiple-Choice Questions 726
Exercises 729

Chapter 27 *HTTP and WWW 731*

27.1 HTTP 731
Transaction 732
Request Messages 732
Response Message 734
Headers 735
Some Examples 736
Some Other Features 738
27.2 WORLD WIDE WEB 738
Hypertext and Hypermedia 739
Browser Architecture 740
Static Documents 740
HTML 741
Examples 743
Dynamic Documents 745
Common Gateway Interface (CGI) 746
Examples 746

Copyrighted material

Active Documents 747
Java 748
Examples 751
27.3 KEY TERMS 752
27.4 SUMMARY 752
27.5 PRACTICE SET 753
Review Questions 753
Multiple-Choice Questions 753
Exercises 758

Chapter 28 *Multimedia 761*

28.1 DIGITIZING AUDIO AND VIDEO 762
Digitizing Audio 762
Digitizing Video 762
28.2 AUDIO AND VIDEO COMPRESSION 763
Audio Compression 763
Video Compression 764
28.3 STREAMING STORED AUDIO/VIDEO 769
First Approach: Using a Web Server 769
Second Approach: Using a Web Server with Metafile 770
Third Approach: Using a Media Server 770
Fourth Approach: Using a Media Server and RTSP 771
28.4 STREAMING LIVE AUDIO/VIDEO 772
28.5 REAL-TIME INTERACTIVE AUDIO/VIDEO 772
Characteristics 773
Real-Time Transport Protocol 777
Real-Time Transport Control Protocol (RTCP) 778
28.6 VOICE OVER IP 779
SIP 779
H.323 781
28.7 KEY TERMS 784
28.8 SUMMARY 784
28.9 PRACTICE SET 785
Review Questions 785
Multiple-Choice Questions 786
Exercises 789

Part 7 Security 791

Chapter 29 *Cryptography 795*

29.1 INTRODUCTION 795
29.2 SYMMETRIC-KEY CRYPTOGRAPHY 796
Traditional Ciphers 797
Block Cipher 801
Operation Modes 805
29.3 PUBLIC-KEY CRYPTOGRAPHY 808
RSA 809

Copyrighted material

Choosing Public and Private Keys 810
29.4 KEY TERMS 810
29.5 SUMMARY 810
29.6 PRACTICE SET 811
Review Questions 811
Multiple-Choice Questions 811
Exercises 813

Chapter 30 *Message Security, User Authentication, and Key Management 815*

30.1 MESSAGE SECURITY 815
Privacy 816
Message Authentication 817
Integrity 817
Nonrepudiation 817
30.2 DIGITAL SIGNATURE 817
Signing the Whole Document 817
Signing the Digest 818
30.3 USER AUTHENTICATION 820
User Authentication with Symmetric-Key Cryptography 820
User Authentication with Public-Key Cryptography 822
30.4 KEY MANAGEMENT 823
Symmetric Key Distribution 823
Public-Key Certification 829
30.5 KERBEROS 831
Servers 831
Operation 832
Using Different Servers 834
Kerberos Version 5 834
Realms 834
30.6 KEY TERMS 835
30.7 SUMMARY 835
30.8 PRACTICE SET 836
Review Questions 836
Multiple-Choice Questions 836
Exercises 839

Chapter 31 *Security Protocols in the Internet 841*

31.1 IP LEVEL SECURITY: IPSEC 841
Security Association 842
Two Modes 842
Two Security Protocols 842
Encapsulating Security Payload 844
31.2 TRANSPORT LAYER SECURITY 846
Position of TLS 846
Two Protocols 846

Copyrighted material

31.3 APPLICATION LAYER SECURITY: PGP 848
31.4 FIREWALLS 849
Packet-Filter Firewall 849
Proxy Firewall 850
31.5 VIRTUAL PRIVATE NETWORK 851
Private Networks 851
Achieving Privacy 852
VPN Technology 854
31.6 KEY TERMS 855
31.7 SUMMARY 855
31.8 PRACTICE SET 856
Review Questions 856
Multiple-Choice Questions 856
Exercises 859

Appendix A *ASCII Code 861*

Appendix B *Numbering Systems and Transformation 865*

B.1 NUMBERING SYSTEMS 865
Decimal Numbers 865
Binary Numbers 866
Octal Numbers 867
Hexadecimal Numbers 868
B.2 TRANSFORMATION 869
From Other Systems to Decimal 870
From Decimal to Other Systems 870
From Binary to Octal or Hexadecimal 871
From Octal or Hexadecimal to Binary 872

Appendix C *The OSI Model 873*

C.1 THE MODEL 873
C.2 LAYERS IN THE OSI MODEL 873
First Four Layers 873
Session Layer 874
Presentation Layer 874
Application Layer 876
C.3 COMPARISON 877

Appendix D *8B/6T Code 878*

Appendix E *Checksum Calculation 881*

E.1 BINARY NOTATION 881
Partial Sum 881
Sum 881
Checksum 881
E.2 HEXADECIMAL NOTATION 882

Copyrighted material

Partial Sum 882
Sum 883
Checksum 884

Appendix F *Structure of a Router 885*

F.1 COMPONENTS 885
Input Ports 885
Output Ports 886
Routing Processor 886
Switching Fabrics 886

Appendix G *ATM LANs 889*

G.1 ATM LAN ARCHITECTURE 889
Pure ATM Architecture 890
Legacy LAN Architecture 890
Mixed Architecture 891
G.2 LAN EMULATION (LANE) 891
G.3 CLIENT-SERVER MODEL 892
LAN Emulation Client (LEC) 892
LAN Emulation Configuration Server (LECS) 893
LAN Emulation Server (LES) 893
Broadcast/Unknown Server (BUS) 893

Appendix H *Client-Server Programs 895*

H.1 UDP CLIENT-SERVER PROGRAMS 895
Server Program 895
Client Program 896
H.2 TCP CLIENT-SERVER PROGRAMS 897
Server Program 898
Client Program 899

Appendix I *RFCs 901*

Appendix J *UDP and TCP Ports 903*

Appendix K *Contact Addresses 905*

Acronyms 907

Glossary 911

Index 949

Copyrighted material

PART 1

Overview of Data Communications and Networking

Data communications and networking are topics that have moved from the technical world to the public realm. Products such as MP3 players and cellular phones are no longer the manifestations of high tech wizardry, but are gadgets toted by everyone from preteens to grandparents. Progress in data communications and networking technologies is proceeding at a rapid rate. Bunny-ear antennas on televisions have gone the way of the dinosaurs, phased out by digital cable and satellite dishes. The home office is moving toward wireless connections as well. The end user of such technologies is only required to know how to use the systems. A student in this field, however, must be familiar with the issues and concepts shown in Figure 1.

Figure 1 *Overview of data communications and networking*

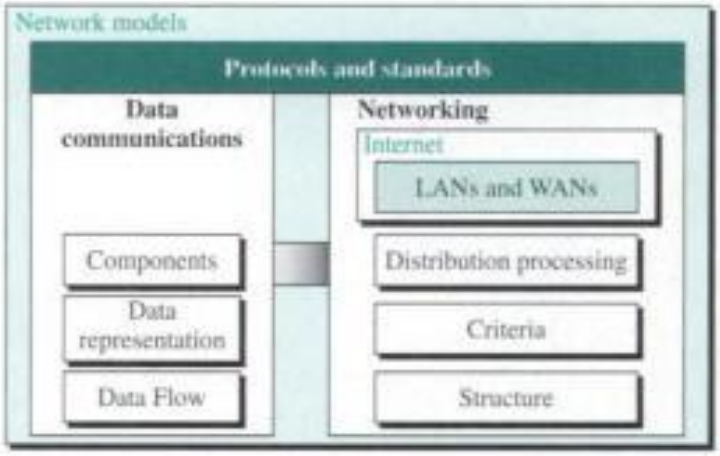

Data Communications

Networks exist so that data may be sent from one place to another—the basic concept of data communications. To fully grasp this subject, we must understand the physical network components, how different types of data can be represented, and how to create a data flow.

Copyrighted material

Networking

Data communications between remote parties can be achieved through a proces
networking, involving the connection of computers, media, and networking
When we talk about networks, we need to keep in mind three concepts: distribu
cessing, network criteria, and network structure.

Local and Wide Area Networks

Networks are divided into two main categories: local area networks (LANs) a
area networks (WANs). These two types of networks have different characteris
different functionalities. In general, a LAN is a collection of computers and pe
devices in a limited area such as a building or campus. A LAN is usually u
domain of a single organization such as a company or department. A WAN, h
is a collection of LANs and spans a large geographical distance.

Internet

The Internet, the main of focus of the book, is a collection of LANs and WA
together by internetworking devices. In the figure, we demonstrate this relatio
having the box entitled *Internet* enclose LANs and WANs. The Internet is, h
more than just a physical connection of LANs and WANs; internetworking p
and standards are also needed.

Protocols and Standards

Protocols and standards are vital to the implementation of data communication
working. Protocols refer to the rules; a standard is a protocol that has been ad
vendors and manufacturers. In the diagram, the *Protocols and Standards* bo
both data communications and networking to emphasize that each area falls u
jurisdiction.

Network Models

Network models serve to organize, unify, and control the hardware and software
nents of data communication and networking. Although the term "network
suggests a relationship to networking, the model also encompasses data communic

Chapters

In Chapter 1 we briefly discuss the first three topics—data communications, n
ing, and protocols and standards. Network models, the cornerstones for the re
book, are described in Chapter 2.

Copyrighted material

CHAPTER 1

Introduction

Data communications and networking are changing the way we do business and the way we live. Business decisions have to be made ever more quickly, and the decision makers require immediate access to accurate information. Why wait a week for that report from Germany to arrive by mail when it could appear almost instantaneously through computer networks? Businesses today rely on computer networks and internetworks. But before we ask how quickly we can get hooked up, we need to know how networks operate, what types of technologies are available, and which design best fills which set of needs.

The development of the personal computer brought about tremendous changes for business, industry, science, and education. A similar revolution is occurring in data communications and networking. Technological advances are making it possible for communications links to carry more and faster signals. As a result, services are evolving to allow use of the expanded capacity, including the extension to established telephone services such as conference calling, call waiting, voice mail, and caller ID.

Data communications and networking are in their infancy. The goal is to be able to exchange data such as text, audio, and video from any point in the world. We want to access the Internet to download and upload information quickly and accurately and at any time.

This chapter addresses four issues: data communications, networks, the Internet, and protocols and standards. First we give a broad definition of data communications. Then we define networks as a highway on which data can travel. The Internet is discussed as a good example of an internetwork (i.e., a network of networks). Finally, we discuss different types of protocols, the difference between protocols and standards, and the organizations that set those standards.

1.1 DATA COMMUNICATIONS

When we communicate, we are sharing information. This sharing can be local or remote. Between individuals, local communication usually occurs face to face, while remote communication takes place over distance. The term **telecommunication,** which includes telephony, telegraphy, and television, means communication at a distance (*tele* is Greek for "far").

The word **data** refers to information presented in whatever form is agreed upon by the parties creating and using the data.

Data communications is the exchange of data between two devices via some form of transmission medium such as a wire cable. For data communications to occur,

Copyrighted material

the communicating devices must be part of a communication system made up of a combination of hardware (physical equipment) and software (programs). The effectiveness of a data communications system depends on three fundamental characteristics: delivery, accuracy, and timeliness.

1. **Delivery.** The system must deliver data to the correct destination. Data must be received by the intended device or user and only by that device or user.
2. **Accuracy.** The system must deliver the data accurately. Data that have been altered in transmission and left uncorrected are unusable.
3. **Timeliness.** The system must deliver data in a timely manner. Data delivered late are useless. In the case of video and audio, timely delivery means delivering data as they are produced, in the same order that they are produced, and without significant delay. This kind of delivery is called *real-time* transmission.

Components

A data communications system has five components (see Fig. 1.1).

Figure 1.1 *Five components of data communication*

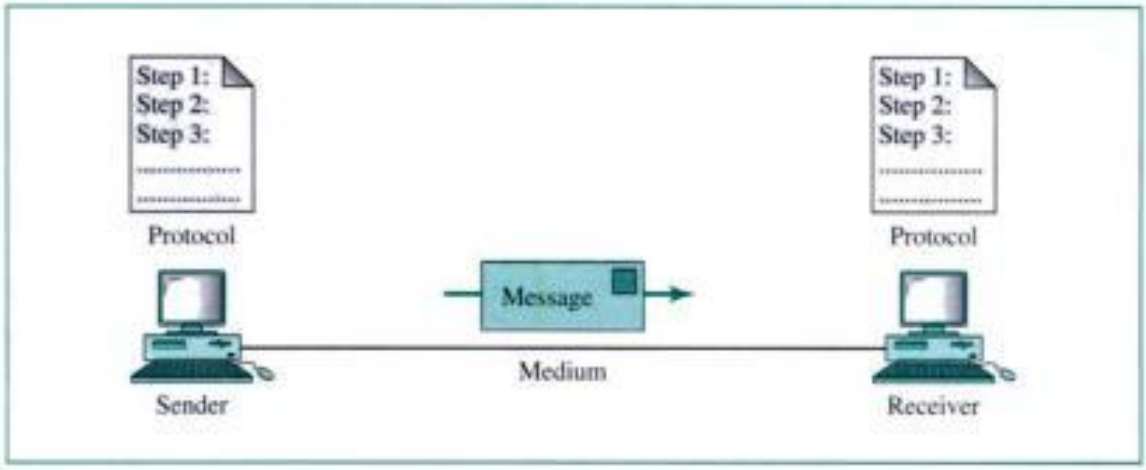

1. **Message.** The **message** is the information (data) to be communicated. It can consist of text, numbers, pictures, sound, or video—or any combination of these.
2. **Sender.** The **sender** is the device that sends the data message. It can be a computer, workstation, telephone handset, video camera, and so on.
3. **Receiver.** The **receiver** is the device that receives the message. It can be a computer, workstation, telephone handset, television, and so on.
4. **Medium.** The **transmission medium** is the physical path by which a message travels from sender to receiver. It could be a twisted-pair wire, coaxial cable, fiber-optic cable, or radio waves (terrestrial or satellite microwave).
5. **Protocol.** A **protocol** is a set of rules that governs data communications. It represents an agreement between the communicating devices. Without a protocol, two devices may be connected but not communicating, just as a person speaking French cannot be understood by a person who speaks only Japanese.

Copyrighted material

Data Representation

Information today comes in different forms such as text, numbers, images, audio, and video.

Text

In data communications, text is represented as a bit pattern, a sequence of bits (0s or 1s). The number of bits in a pattern depends on the number of symbols in the language. For example, the English language uses 26 symbols (A, B, C, . . . , Z) to represent uppercase letters, 26 symbols (a, b, c, . . . , z) to represent lowercase letters, 10 symbols (0, 1, 2, . . . , 9) to represent numeric characters, and symbols (., ?, :, ; . . . , !) to represent punctuation. Other symbols such as the blank, the newline, and the tab are used for text alignment and readability.

Different sets of bit patterns have been designed to represent text symbols. Each set is called a **code,** and the process of representing symbols is called coding.

ASCII The American National Standards Institute (ANSI) developed a code called the American Standard Code for Information Interchange (ASCII). This code uses 7 bits for each symbol. This means 128 (2^7) different symbols can be defined by this code. The full bit patterns for ASCII code are found in Appendix A.

Extended ASCII To make the size of each pattern 1 byte (8 bits), the ASCII bit patterns are augmented with an extra 0 at the left. Now each pattern is exactly 1 byte of memory. In other words, in extended ASCII, the first pattern is 00000000 and the last one is 01111111.

Unicode Neither of the foregoing codes represents symbols belonging to languages other than English. For that, a code with much greater capacity is needed. A coalition of hardware and software manufacturers have designed a code called Unicode that uses 16 bits and can represent up to 65,536 (2^{16}) symbols. Different sections of the code are allocated to symbols from different languages in the world. Some parts of the code are used for graphical and special symbols.

ISO The International Organization for Standardization, known as ISO, has designed a code using a 32-bit pattern. This code can represent up to 4,294,967,296 (2^{32}) symbols, which is definitely enough to represent any symbol in the world today.

Numbers

Numbers are also represented by using bit patterns. However, a code such as ASCII is not used to represent numbers; the number is directly converted to a binary number. The reason is to simplify mathematical operations on numbers. Appendix B lists the binary numbers and their equivalents.

Images

Images today are also represented by bit patterns. However, the mechanism is different. In its simpler form, an image is divided into a matrix of pixels (picture elements), where each pixel is a small dot. The size of the pixel depends on what is called the *resolution.* For example, an image can be divided into 1000 pixels or 10,000 pixels. In the

Copyrighted material

second case, there is a better representation of the image (better resolution), but more memory is needed to store the image.

After an image is divided into pixels, each pixel is assigned a bit pattern. The size and the value of the pattern depend on the image. For an image made of only black-and-white dots (e.g., a chessboard), a 1-bit pattern is enough to represent a pixel.

If an image is not made of pure white and pure black pixels, you can increase the size of the bit pattern to include gray scale. For example, to show four levels of gray scale, you can use 2-bit patterns. A black pixel can be represented by 00, a dark gray pixel by 01, a light gray pixel by 10, and a white pixel by 11.

To represent color images, each colored pixel is decomposed into three primary colors: red, green, and blue (RGB). Then the intensity of each color is measured, and a bit pattern (usually 8 bits) is assigned to it. In other words, each pixel has three bit patterns: one to represent the intensity of the red color, one to represent the intensity of the green color, and one to represent the intensity of the blue color.

Audio

Audio is a representation of sound. Audio is by nature different from text, numbers, or images. It is continuous, not discrete. Even when we use a microphone to change voice or music to an electric signal, we create a continuous signal. In Chapters 4 and 5, we learn how to change audio to a digital or an analog signal.

Video

Video can be produced either as a continuous entity (e.g., by a TV camera), or it can be a combination of images, each a discrete entity, arranged to convey the idea of motion. Again we can change video to a digital or an analog signal, as we will see in Chapters 4 and 5.

Direction of Data Flow

Communication between two devices can be simplex, half-duplex, or full-duplex.

Simplex

In **simplex mode,** the communication is unidirectional, as on a one-way street. Only one of the two devices on a link can transmit; the other can only receive (see Fig. 1.2).

Figure 1.2 *Simplex*

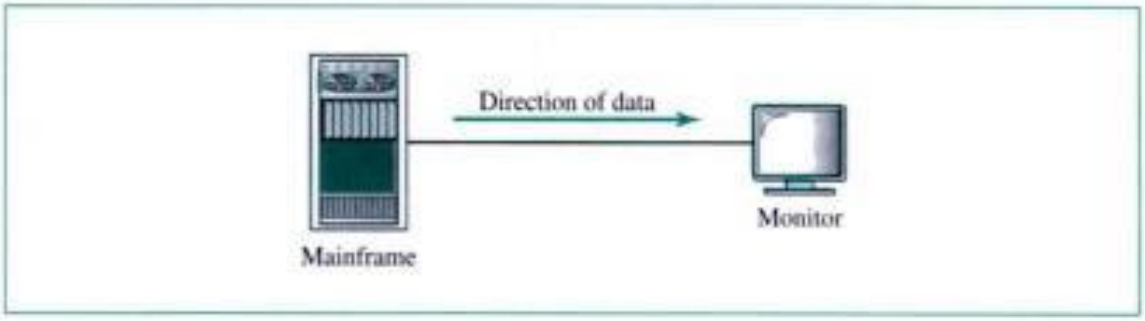

Copyrighted material

Keyboards and traditional monitors are both examples of simplex devices. The keyboard can only introduce input; the monitor can only accept output.

Half-Duplex

In **half-duplex mode,** each station can both transmit and receive, but not at the same time. When one device is sending, the other can only receive, and vice versa (see Fig. 1.3).

Figure 1.3 *Half-duplex*

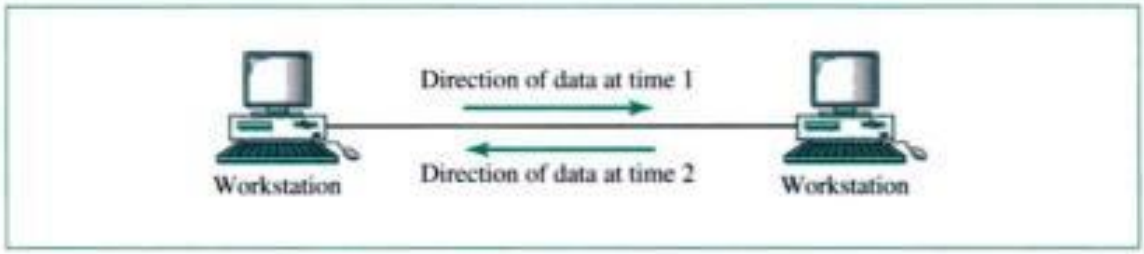

The half-duplex mode is like a one-lane road with two-directional traffic. While cars are traveling one direction, cars going the other way must wait. In a half-duplex transmission, the entire capacity of a channel is taken over by whichever of the two devices is transmitting at the time. Walkie-talkies and CB (citizens band) radios are both half-duplex systems.

Full-Duplex

In **full-duplex mode** (also called **duplex**), both stations can transmit and receive simultaneously (see Fig. 1.4).

Figure 1.4 *Full-duplex*

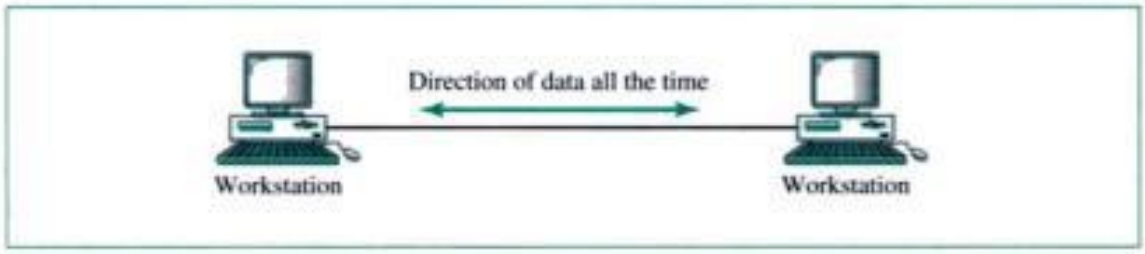

The full-duplex mode is like a two-way street with traffic flowing in both directions at the same time. In full-duplex mode, signals going in either direction share the capacity of the link. This sharing can occur in two ways: Either the link must contain two physically separate transmission paths, one for sending and the other for receiving; or the capacity of the channel is divided between signals traveling in both directions.

One common example of full-duplex communication is the telephone network. When two people are communicating by a telephone line, both can talk and listen at the same time.

Copyrighted material

1.2 NETWORKS

A **network** is a set of devices (often referred to as *nodes*) connected by communication links. A node can be a computer, printer, or any other device capable of sending and/or receiving data generated by other nodes on the network.

Distributed Processing

Most networks use **distributed processing,** in which a task is divided among multiple computers. Instead of a single large machine being responsible for all aspects of a process, separate computers (usually a personal computer or workstation) handle a subset.

Network Criteria

A network must be able to meet a certain number of criteria. The most important of these are performance, reliability, and security.

Performance

Performance can be measured in many ways, including transit time and response time. Transit time is the amount of time required for a message to travel from one device to another. Response time is the elapsed time between an inquiry and a response. The performance of a network depends on a number of factors, including the number of users, the type of transmission medium, the capabilities of the connected hardware, and the efficiency of the software.

Reliability

In addition to accuracy of delivery, network **reliability** is measured by the frequency of failure, the time it takes a link to recover from a failure, and the network's robustness in a catastrophe.

Security

Network **security** issues include protecting data from unauthorized access.

Physical Structures

Before discussing networks, we need to define some network attributes.

Type of Connection

A network is two or more devices connected together through links. A link is a communications pathway that transfers data from one device to another. For visualization purposes, it is simplest to imagine any link as a line drawn between two points. For communication to occur, two devices must be connected in some way to the same link at the same time. There are two possible type of connections: point-to-point and multipoint.

Copyrighted material

Point-to-Point A **point-to-point** connection provides a dedicated link between two devices. The entire capacity of the link is reserved for transmission between those two devices. Most point-to-point connections use an actual length of wire or cable to connect the two ends, but other options, such as microwave or satellite links, are also possible (see Fig. 1.5). When you change television channels by infrared remote control, you are establishing a point-to-point connection between the remote control and the television's control system.

Figure 1.5 *Point-to-point connection*

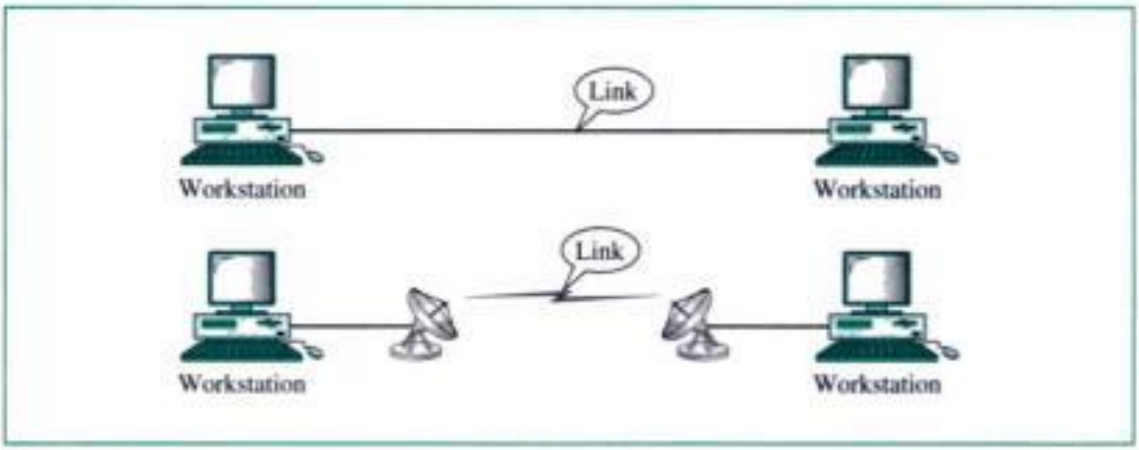

Multipoint A **multipoint** (also called **multidrop**) connection is one in which more than two specific devices share a single link (see Fig. 1.6).

In a multipoint environment, the capacity of the channel is shared, either spatially or temporally. If several devices can use the link simultaneously, it is a *spatially shared* connection. If users must take turns, it is a *timeshare* connection.

Figure 1.6 *Multipoint connection*

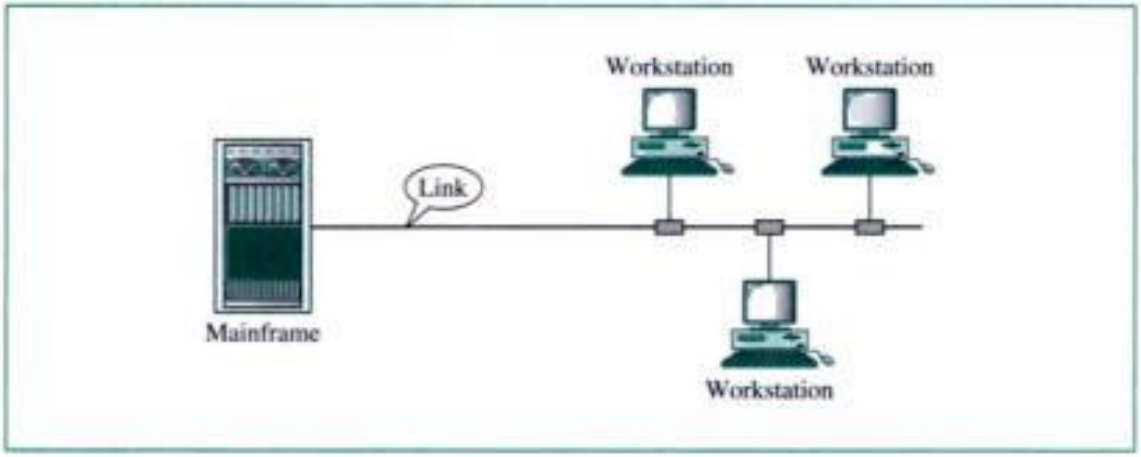

Physical Topology

The term **physical topology** refers to the way in which a network is laid out physically. Two or more devices connect to a link; two or more links form a topology. The topology of a network is the geometric representation of the relationship of all the links and

Copyrighted material

Figure 1.7 *Categories of topology*

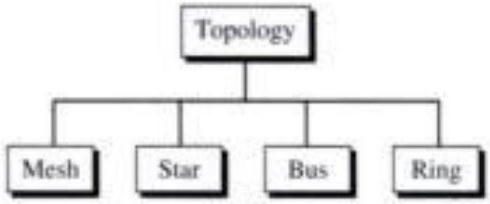

linking devices (usually called **nodes**) to one another. There are four basic topologies possible: mesh, star, bus, and ring (see Fig. 1.7).

Mesh In a **mesh topology,** every device has a dedicated point-to-point link to every other device. The term *dedicated* means that the link carries traffic only between the two devices it connects. A fully connected mesh network therefore has $n(n-1)/2$ physical channels to link n devices. To accommodate that many links, every device on the network must have $n-1$ input/output (I/O) ports (see Fig. 1.8).

Figure 1.8 *Fully connected mesh topology (for five devices)*

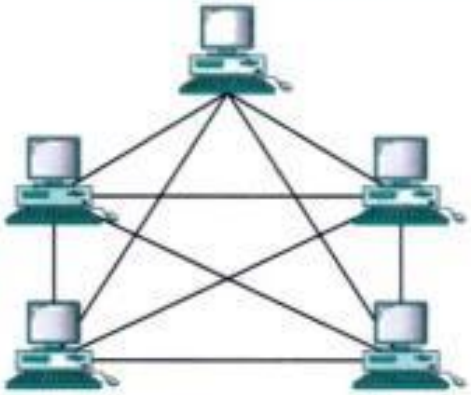

A mesh offers several advantages over other network topologies. First, the use of dedicated links guarantees that each connection can carry its own data load, thus eliminating the traffic problems that can occur when links must be shared by multiple devices. Second, a mesh topology is robust. If one link becomes unusable, it does not incapacitate the entire system. Another advantage is privacy or security. When every message travels along a dedicated line, only the intended recipient sees it. Physical boundaries prevent other users from gaining access to messages. Finally, point-to-point links make fault identification and fault isolation easy. Traffic can be routed to avoid links with suspected problems. This facility enables the network manager to discover the precise location of the fault and aids in finding its cause and solution.

The main disadvantages of a mesh are related to the amount of cabling and the number of I/O ports required. First, because every device must be connected to every

Copyrighted material

other device, installation and reconnection are difficult. Second, the sheer bulk of the wiring can be greater than the available space (in walls, ceilings, or floors) can accommodate. Finally, the hardware required to connect each link (I/O ports and cable) can be prohibitively expensive. For these reasons a mesh topology is usually implemented in a limited fashion—for example, as a backbone connecting the main computers of a hybrid network that can include several other topologies.

Star In a **star topology,** each device has a dedicated point-to-point link only to a central controller, usually called a **hub.** The devices are not directly linked to one another. Unlike a mesh topology, a star topology does not allow direct traffic between devices. The controller acts as an exchange: If one device wants to send data to another, it sends the data to the controller, which then relays the data to the other connected device (see Fig. 1.9).

Figure 1.9 *Star topology*

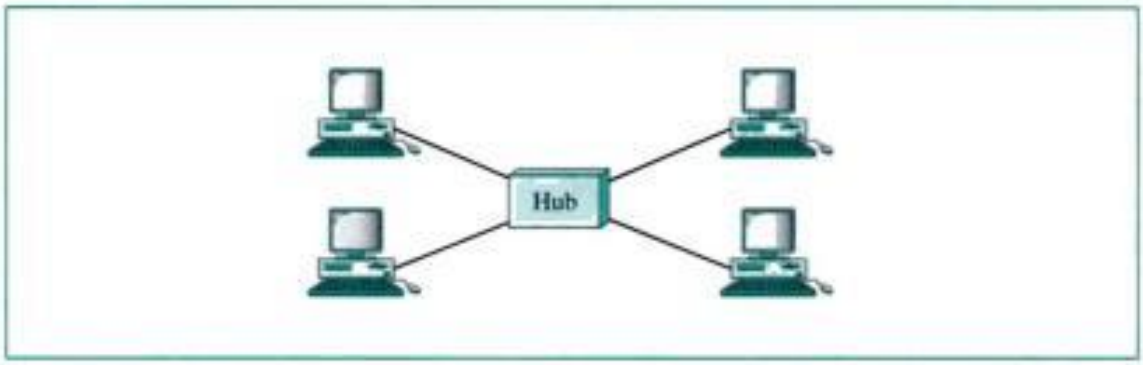

A star topology is less expensive than a mesh topology. In a star, each device needs only one link and one I/O port to connect it to any number of others. This factor also makes it easy to install and reconfigure. Far less cabling needs to be housed, and additions, moves, and deletions involve only one connection: between that device and the hub.

Other advantages include robustness. If one link fails, only that link is affected. All other links remain active. This factor also lends itself to easy fault identification and fault isolation. As long as the hub is working, it can be used to monitor link problems and bypass defective links.

However, although a star requires far less cable than a mesh, each node must be linked to a central hub. For this reason, often more cabling is required in a star than in some other topologies (such as ring or bus).

Bus The preceding examples all describe point-to-point connections. A **bus topology,** on the other hand, is multipoint. One long cable acts as a **backbone** to link all the devices in a network (see Fig. 1.10).

Nodes are connected to the bus cable by drop lines and taps. A drop line is a connection running between the device and the main cable. A tap is a connector that either splices into the main cable or punctures the sheathing of a cable to create a contact with the metallic core. As a signal travels along the backbone, some of its energy is transformed into heat. Therefore, it becomes weaker and weaker as it has to travel farther

Copyrighted material

Figure 1.10 *Bus topology*

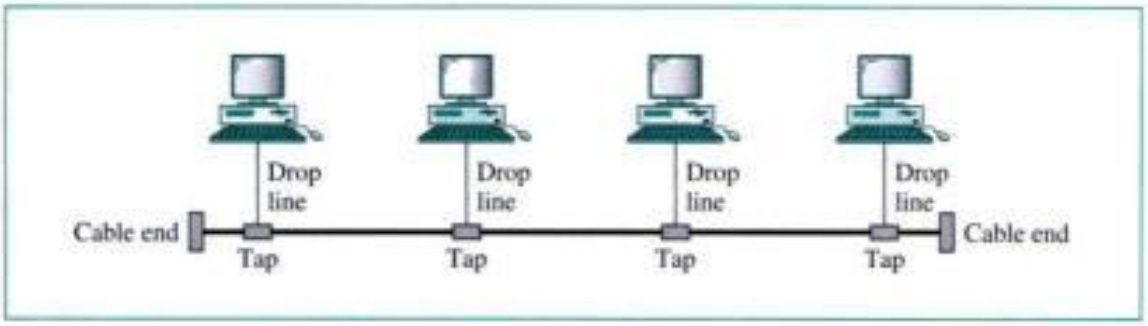

and farther. For this reason there is a limit on the number of taps a bus can support and on the distance between those taps.

Advantages of a bus topology include ease of installation. Backbone cable can be laid along the most efficient path, then connected to the nodes by drop lines of various lengths. In this way, a bus uses less cabling than mesh or star topologies. In a star, for example, four network devices in the same room require four lengths of cable reaching all the way to the hub. In a bus, this redundancy is eliminated. Only the backbone cable stretches through the entire facility. Each drop line has to reach only as far as the nearest point on the backbone.

Disadvantages include difficult reconnection and fault isolation. A bus is usually designed to be optimally efficient at installation. It can therefore be difficult to add new devices. Signal reflection at the taps can cause degradation in quality. This degradation can be controlled by limiting the number and spacing of devices connected to a given length of cable. Adding new devices may therefore require modification or replacement of the backbone.

In addition, a fault or break in the bus cable stops all transmission, even between devices on the same side of the problem. The damaged area reflects signals back in the direction of origin, creating noise in both directions.

Ring In a **ring topology,** each device has a dedicated point-to-point connection only with the two devices on either side of it. A signal is passed along the ring in one direction, from device to device, until it reaches its destination. Each device in the ring incorporates a repeater. When a device receives a signal intended for another device, its repeater regenerates the bits and passes them along (see Fig. 1.11).

Figure 1.11 *Ring topology*

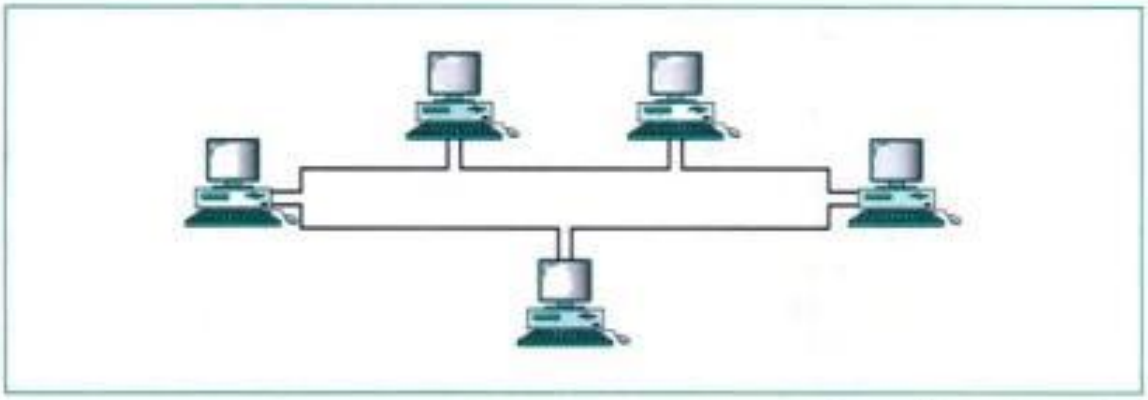

Copyrighted material

A ring is relatively easy to install and reconfigure. Each device is linked only to its immediate neighbors (either physically or logically). To add or delete a device requires changing only two connections. The only constraints are media and traffic considerations (maximum ring length and number of devices). In addition, fault isolation is simplified. Generally in a ring, a signal is circulating at all times. If one device does not receive a signal within a specified period, it can issue an alarm. The alarm alerts the network operator to the problem and its location.

However, unidirectional traffic can be a disadvantage. In a simple ring, a break in the ring (such as a disabled station) can disable the entire network. This weakness can be solved by using a dual ring or a switch capable of closing off the break.

Categories of Networks

Today when we speak of networks, we are generally referring to three primary categories: local area networks, metropolitan area networks, and wide area networks. Into which category a network falls is determined by its size, its ownership, the distance it covers, and its physical architecture (see Fig. 1.12).

Figure 1.12 *Categories of networks*

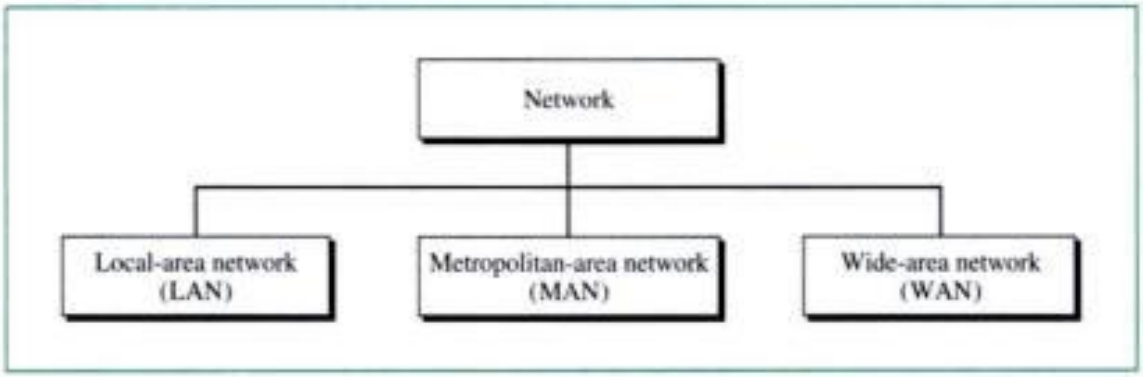

Local Area Network (LAN) A **local area network (LAN)** is usually privately owned and links the devices in a single office, building, or campus (see Fig. 1.13). Depending on the needs of an organization and the type of technology used, a LAN can be as simple as two PCs and a printer in someone's home office; or it can extend throughout a company and include audio and video peripherals. Currently, LAN size is limited to a few kilometers.

LANs are designed to allow resources to be shared between personal computers or workstations. The resources to be shared can include hardware (e.g., a printer), software (e.g., an application program), or data. A common example of a LAN, found in many business environments, links a workgroup of task-related computers, for example, engineering workstations or accounting PCs. One of the computers may be given a large-capacity disk drive and may become a server to the other clients. Software can be stored on this central server and used as needed by the whole group. In this example, the size of the LAN may be determined by licensing restrictions on the number of users per copy of software, or by restrictions on the number of users licensed to access the operating system.

Copyrighted material

Figure 1.13 *LAN*

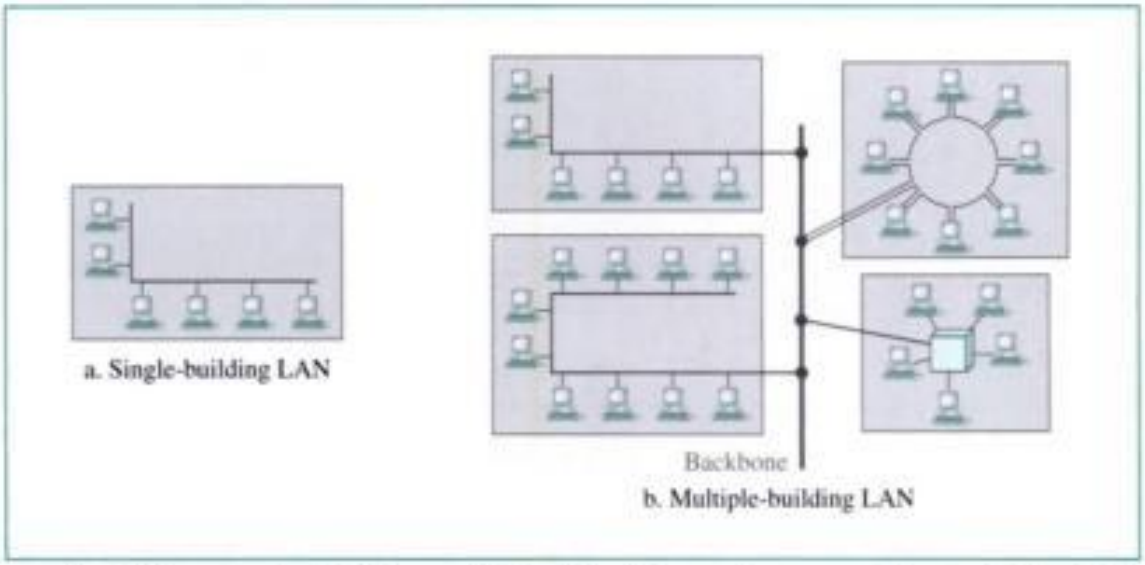

In addition to size, LANs are distinguished from other types of networks by their transmission media and topology. In general, a given LAN will use only one type of transmission medium. The most common LAN topologies are bus, ring, and star.

Traditionally, LANs have data rates in the 4 to 16 megabits per second (Mbps) range. Today, however, speeds are increasing and can reach 100 Mbps with gigabit systems in development. LANs are discussed at length in Chapters 14, 15, and 16.

Metropolitan-Area Network (MAN) A **metropolitan-area network (MAN)** is designed to extend over an entire city. It may be a single network such as a cable television network, or it may be a means of connecting a number of LANs into a larger network so that resources may be shared LAN-to-LAN as well as device-to-device. For example, a company can use a MAN to connect the LANs in all its offices throughout a city (see Fig. 1.14).

A MAN may be wholly owned and operated by a private company, or it may be a service provided by a public company, such as a local telephone company. Many

Figure 1.14 *MAN*

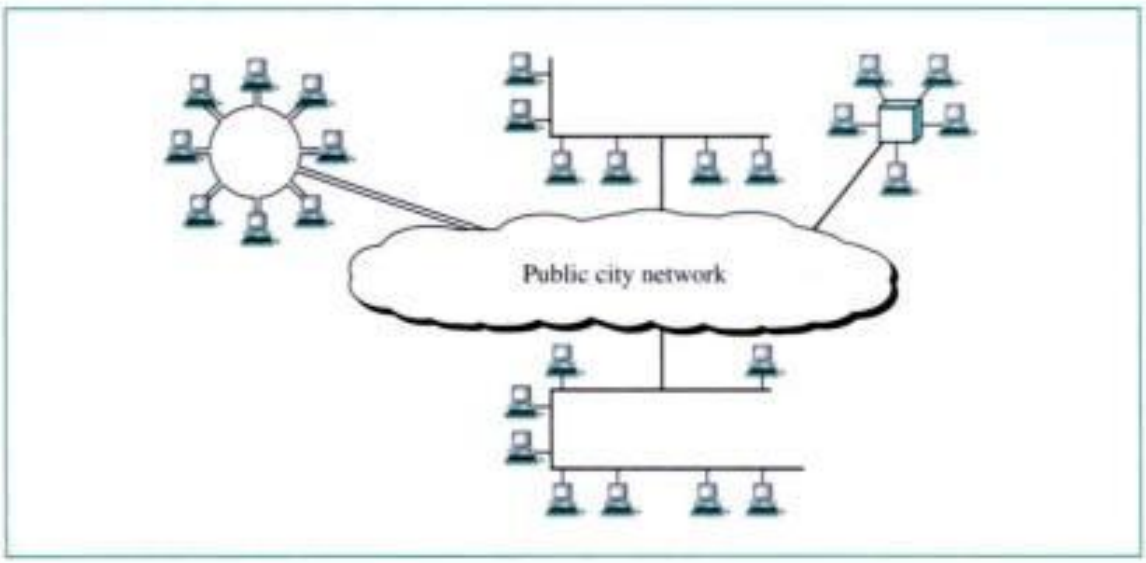

Copyrighted material

telephone companies provide a popular MAN service called Switched Multi-megabit Data Services (SMDS).

Wide Area Network (WAN) A **wide area network (WAN)** provides long-distance transmission of data, voice, image, and video information over large geographic areas that may comprise a country, a continent, or even the whole world (see Fig. 1.15).

Figure 1.15 *WAN*

In contrast to LANs (which depend on their own hardware for transmission), WANs may utilize public, leased, or private communication equipment, usually in combinations, and can therefore span an unlimited number of miles.

A WAN that is wholly owned and used by a single company is often referred to as an *enterprise network*. WANs are discussed in Chapters 17 and 18.

Internetworks When two or more networks are connected, they become an **internetwork,** or **internet.**

1.3 THE INTERNET

The Internet has revolutionized many aspects of our daily lives. It has affected the way we do business as well as the way we spend our leisure time. Count the ways you've used the Internet recently. Perhaps you've sent electronic mail (email) to a business associate, paid a utility bill, read a newspaper from a distant city, or looked up a local movie schedule—all by using the Internet. Or maybe you researched a medical topic, booked a hotel reservation, chatted with a fellow Trekker, or comparison-shopped for a car. The Internet is a communication system that has brought a wealth of information to our fingertips and organized it for our use.

The Internet is a structured, organized system. We begin with a brief history of the Internet. We follow with a description of the Internet today.

A Brief History

A **network** is a group of connected communicating devices such as computers and printers. An internet (note the lowercase letter i) is two or more networks that can

Copyrighted material

communicate with each other. The most notable internet is called the **Internet** (uppercase letter I), a collaboration of more than hundreds of thousands interconnected networks. Private individuals as well as various organizations such as government agencies, schools, research facilities, corporations, and libraries in more than 100 countries use the Internet. Millions of people are users. Yet this extraordinary communication system only came into being in 1969.

In the mid-1960s, mainframe computers in research organizations were standalone devices. Computers from different manufacturers were unable to communicate with one another. The **Advanced Research Projects Agency (ARPA)** in the Department of Defense (DOD) was interested in finding a way to connect computers so that the researchers they funded could share their findings, thereby reducing costs and eliminating duplication of effort.

In 1967, at an Association for Computing Machinery (ACM) meeting, ARPA presented its ideas for **ARPANET,** a small network of connected computers. The idea was that each host computer (not necessarily from the same manufacturer) would be attached to a specialized computer, called an *interface message processor* (IMP). The IMPs, in turn, would be connected to one another. Each IMP had to be able to communicate with other IMPs as well as with its own attached host.

By 1969, ARPANET was a reality. Four nodes, at the University of California at Los Angeles (UCLA), the University of California at Santa Barbara (UCSB), Stanford Research Institute (SRI), and the University of Utah, were connected via the IMPs to form a network. Software called the *Network Control Protocol* (NCP) provided communication between the hosts.

In 1972, Vint Cerf and Bob Kahn, both of whom were part of the core ARPANET group, collaborated on what they called the *Internetting Project*. Cerf and Kahn's landmark 1973 paper outlined the protocols to achieve end-to-end delivery of packets. This paper on Transmission Control Protocol (TCP) included concepts such as encapsulation, the datagram, and the functions of a gateway.

Shortly thereafter, authorities made a decision to split TCP into two protocols: **Transmission Control Protocol (TCP)** and **Internetworking Protocol (IP).** IP would handle datagram routing while TCP would be responsible for higher-level functions such as segmentation, reassembly, and error detection. The internetworking protocol became known as TCP/IP.

The Internet Today

The Internet has come a long way since the 1960s. The Internet today is not a simple hierarchical structure. It is made up of many wide- and local area networks joined by connecting devices and switching stations. It is difficult to give an accurate representation of the Internet because it is continuously changing—new networks are being added, existing networks are adding addresses, and networks of defunct companies are being removed. Today most end users who want Internet connection use the services of Internet service providers (ISPs). There are international service providers, national service providers, regional service providers, and local service providers. The Internet today is run by private companies, not the government. Figure 1.16 shows a conceptual (not geographic) view of the Internet.

Copyrighted material

Figure 1.16 *Internet today*

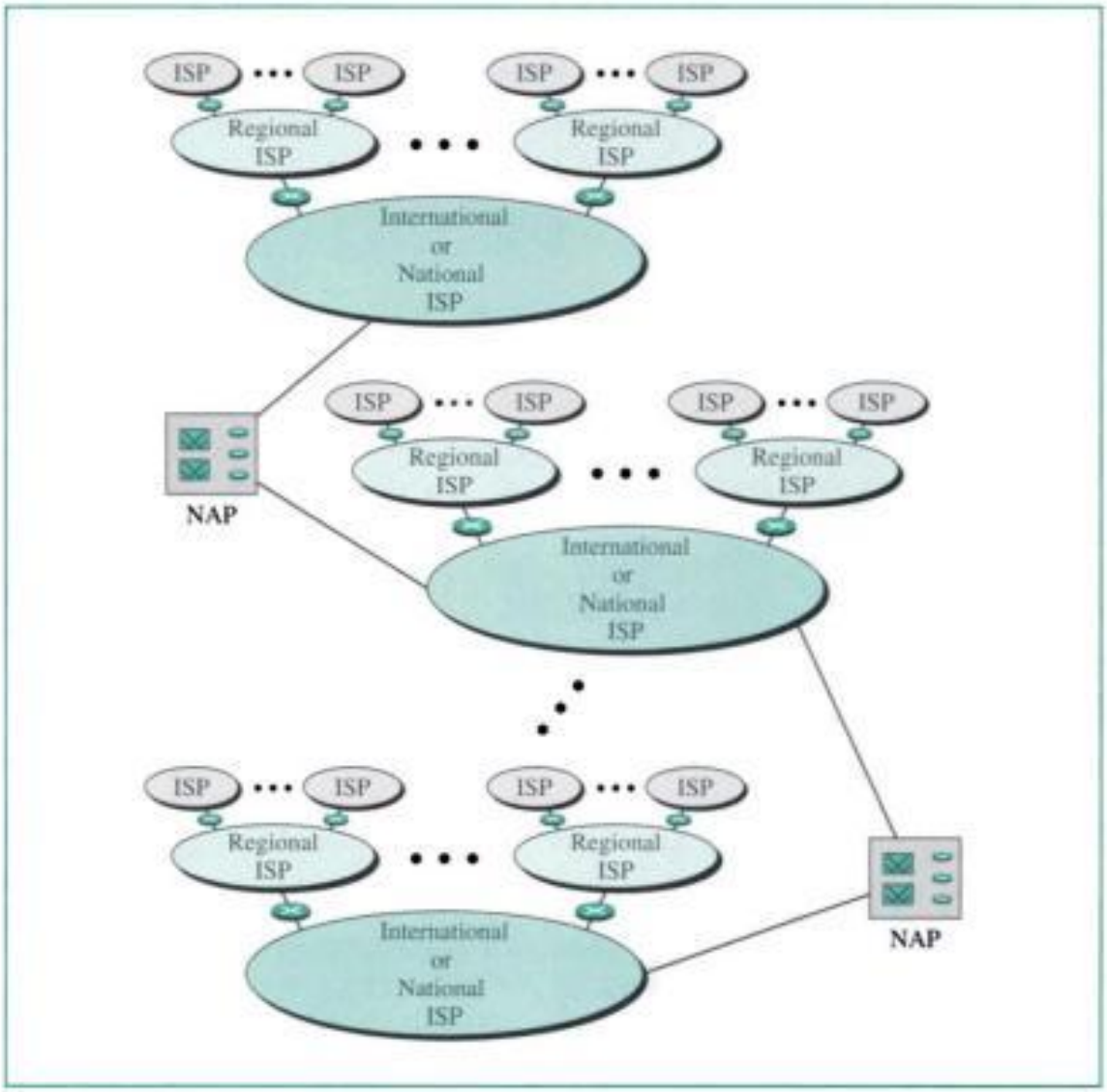

International Service Providers

At the top of the hierarchy are the international service providers that connect nations together.

National Service Providers (NSPs)

National service providers (NSPs) are backbone networks created and maintained by specialized companies. There are many NSPs operating in North America; some of the most well known are SprintLink, PSINet, UUNet Technology, AGIS, and internet MCI. To provide connectivity between the end users, these backbone networks are connected by complex switching stations (normally run by a third party), called **network access points (NAPs).** Some NSP networks are also connected to one another by private switching stations called *peering points*. NSPs normally operate at a high data rate (up to 600 Mbps).

Copyrighted material

Regional Internet Service Providers

Regional internet service providers or **regional ISPs** are smaller ISPs that are connected to one or more NSPs. They are at the third level of hierarchy with a lesser data rate.

Local Internet Service Providers

Local Internet service providers provide direct service to the end users. The local ISPs can be connected to regional ISPs or directly to NSPs. Most end users are connected to the local ISPs. Note that in this sense, a local ISP can be a company that just provides Internet services, a corporation with a network that supplies services to its own employees, or a nonprofit organization, such as a college or a university, that runs its own network. Each of these local ISPs can be connected to a regional or national service provider.

1.4 PROTOCOLS AND STANDARDS

In this section, we define two widely used terms: protocols and standards. First, we define *protocol*, which is synonymous with *rule*. Then we discuss *standards*, which are agreed-upon rules.

Protocols

In computer networks, communication occurs between entities in different systems. An **entity** is anything capable of sending or receiving information. However, two entities cannot simply send bit streams to each other and expect to be understood. For communication to occur, the entities must agree on a protocol. A **protocol** is a set of rules that governs data communications. A protocol defines what is communicated, how it is communicated, and when it is communicated. The key elements of a protocol are syntax, semantics, and timing.

- **Syntax.** Syntax refers to the structure or format of the data, meaning the order in which they are presented. For example, a simple protocol might expect the first 8 bits of data to be the address of the sender, the second 8 bits to be the address of the receiver, and the rest of the stream to be the message itself.
- **Semantics.** Semantics refers to the meaning of each section of bits. How is a particular pattern to be interpreted, and what action is to be taken based on that interpretation? For example, does an address identify the route to be taken or the final destination of the message?
- **Timing.** Timing refers to two characteristics: when data should be sent and how fast they can be sent. For example, if a sender produces data at 100 Mbps but the receiver can process data at only 1 Mbps, the transmission will overload the receiver and data will be largely lost.

Standards

Standards are essential in creating and maintaining an open and competitive market for equipment manufacturers and in guaranteeing national and international interoperability of data and telecommunications technology and processes. They provide guidelines to

Copyrighted material

manufacturers, vendors, government agencies, and other service providers to ensure the kind of interconnectivity necessary in today's marketplace and in international communications. Data communication standards fall into two categories: *de facto* (meaning "by fact" or "by convention") and *de jure* (meaning "by law" or "by regulation").

- **De facto.** Standards that have not been approved by an organized body but have been adopted as standards through widespread use are **de facto standards.** De facto standards are often established originally by manufacturers that seek to define the functionality of a new product or technology.
- **De jure.** Those that have been legislated by an officially recognized body are **de jure standards.**

Standards Organizations

Standards are developed through the cooperation of standards creation committees, forums, and government regulatory agencies.

Standards Creation Committees

While many organizations are dedicated to the establishment of standards, data telecommunications in North America rely primarily on those published by the following:

- **International Organization for Standardization (ISO).** The ISO is a multinational body whose membership is drawn mainly from the standards creation committees of various governments throughout the world. The ISO is active in developing cooperation in the realms of scientific, technological, and economic activity.
- **International Telecommunication Union—Telecommunication Standards Sector (ITU-T).** By the early 1970s, a number of countries were defining national standards for telecommunications, but there was still little international compatibility. The United Nations responded by forming, as part of its International Telecommunication Union (ITU), a committee, the **Consultative Committee for International Telegraphy and Telephony (CCITT).** This committee was devoted to the research and establishment of standards for telecommunications in general and for phone and data systems in particular. On March 1, 1993, the name of this committee was changed to the International Telecommunication Union—Telecommunication Standards Sector (ITU-T).
- **American National Standards Institute (ANSI).** Despite its name, the American National Standards Institute is a completely private, nonprofit corporation not affiliated with the U.S. federal government. However, all ANSI activities are undertaken with the welfare of the United States and its citizens occupying primary importance.
- **Institute of Electrical and Electronics Engineers (IEEE).** The Institute of Electrical and Electronics Engineers is the largest professional engineering society in the world. International in scope, it aims to advance theory, creativity, and product quality in the fields of electrical engineering, electronics, and radio as well as in all related branches of engineering. As one of its goals, the IEEE oversees the development and adoption of international standards for computing and communications.

Copyrighted material

- **Electronic Industries Association (EIA).** Aligned with ANSI, the Electronic Industries Association is a nonprofit organization devoted to the promotion of electronics manufacturing concerns. Its activities include public awareness education and lobbying efforts in addition to standards development. In the field of information technology, the EIA has made significant contributions by defining physical connection interfaces and electronic signaling specifications for data communication.

Forums

Telecommunications technology development is moving faster than the ability of standards committees to ratify standards. Standards committees are procedural bodies and by nature slow-moving. To accommodate the need for working models and agreements and to facilitate the standardization process, many special-interest groups have developed *forums* made up of representatives from interested corporations. The forums work with universities and users to test, evaluate, and standardize new technologies. By concentrating their efforts on a particular technology, the forums are able to speed acceptance and use of those technologies in the telecommunications community. The forums present their conclusions to the standards bodies.

Regulatory Agencies

All communications technology is subject to regulation by government agencies such as the **Federal Communications Commission (FCC)** in the United States. The purpose of these agencies is to protect the public interest by regulating radio, television, and wire/cable communications. The FCC has authority over interstate and international commerce as it relates to communications.

Internet Standards

An **Internet standard** is a thoroughly tested specification that is useful to and adhered to by those who work with the Internet. It is a formalized regulation that must be followed. There is a strict procedure by which a specification attains Internet standard status. A specification begins as an Internet draft. An **Internet draft** is a working document (a work in progress) with no official status and a 6-month lifetime. Upon recommendation from the Internet authorities, a draft may be published as a **Request for Comment (RFC).** Each RFC is edited, assigned a number, and made available to all interested parties. RFCs go through maturity levels and are categorized according to their requirement level.

1.5 KEY TERMS

Advanced Research Projects Agency (ARPA)
American National Standards Institute (ANSI)
ARPANET
audio
backbone
bus topology
code
Consultative Committee for International Telegraphy and Telephony (CCITT)
CSNET
data
data communications
de facto standards

Copyrighted material

de jure standards
distributed processing
Electronic Industries Association (EIA)
entity
Federal Communications Commission (FCC)
forum
full-duplex mode
half-duplex mode
hub
image
Institute of Electrical and Electronics Engineers (IEEE)
International Organization for Standardization (ISO)
International Telecommunication Union–Telecommunication Standards Sector (ITU-T)
Internet
Internet draft
Internet service provider (ISP)
Internet standard
internetwork (internet)
local area network (LAN)
local Internet service providers
maturity levels
mesh topology
message
metropolitan area network (MAN)
multipoint connection
national service provider (NSP)
network
node
performance
physical topology
point-to-point connection
protocol
receiver
regional ISPs
reliability
Request for Comment (RFC)
ring topology
security
semantics
sender
simplex mode
star topology
syntax
telecommunications
timing
Transmission Control Protocol/Internetworking Protocol (TCP/IP)
transmission medium
video
wide area network (WAN)

1.6 SUMMARY

- Data communication is the transfer of data from one device to another via some form of transmission medium.
- A data communications system must transmit data to the correct destination in an accurate and timely manner.
- The five components that make up a data communications system are the message, sender, receiver, medium, and protocol.
- Text, numbers, images, audio, and video are different forms of information.
- Data flow between two devices can occur in one of three ways: simplex, half-duplex, or full-duplex.
- A network is a set of communication devices connected by media links.
- In a point-to-point connection, two and only two devices are connected by a dedicated link. In a multipoint connection, three or more devices share a link.

Copyrighted material

- Topology refers to the physical or logical arrangement of a network. Devices may be arranged in a mesh, star, bus, or ring topology.
- A network can be categorized as a local area network (LAN), a metropolitan-area network (MAN), or a wide area network (WAN).
- A LAN is a data communication system within a building, plant, or campus, or between nearby buildings.
- A MAN is a data communication system covering an area the size of a town or city.
- A WAN is a data communication system spanning states, countries, or the whole world.
- An internet is a network of networks.
- The Internet is a collection of many separate networks.
- TCP/IP is the protocol suite for the Internet.
- There are local, regional, national, and international Internet service providers (ISPs).
- A protocol is a set of rules that governs data communication; the key elements of a protocol are syntax, semantics, and timing.
- Standards are necessary to ensure that products from different manufacturers can work together as expected.
- The ISO, ITU-T, ANSI, IEEE, and EIA are some of the organizations involved in standards creation.
- Forums are special-interest groups that quickly evaluate and standardize new technologies.
- A Request for Comment (RFC) is an idea or concept that is a precursor to an Internet standard.

1.7 PRACTICE SET

Review Questions

1. Identify the five components of a data communications system.
2. What are the advantages of distributed processing?
3. What are the three criteria necessary for an effective and efficient network?
4. What are the advantages of a multipoint connection over a point-to-point connection?
5. What are the two types of line configuration?
6. Categorize the four basic topologies in terms of line configuration.
7. What is the difference between half-duplex and full-duplex transmission modes?
8. Name the four basic network topologies, and give an advantage for each type.
9. For n devices in a network, what is the number of cable links required for a mesh, ring, bus, and star topology?
10. What are some of the factors that determine whether a communication system is a LAN, MAN, or WAN?
11. What is an internet? What is the Internet?

Copyrighted material

12. Why are protocols needed?
13. Why are standards needed?

Multiple-Choice Questions

14. The _____ is the physical path over which a message travels.
    a. Protocol
    b. Medium
    c. Signal
    d. All the above
15. The information to be communicated in a data communications system is the _____.
    a. Medium
    b. Protocol
    c. Message
    d. Transmission
16. Frequency of failure and network recovery time after a failure are measures of the _____ of a network.
    a. Performance
    b. Reliability
    c. Security
    d. Feasibility
17. An unauthorized user is a network _____ issue.
    a. Performance
    b. Reliability
    c. Security
    d. All the above
18. Which topology requires a central controller or hub?
    a. Mesh
    b. Star
    c. Bus
    d. Ring
19. Which topology requires a multipoint connection?
    a. Mesh
    b. Star
    c. Bus
    d. Ring
20. Communication between a computer and a keyboard involves _____ transmission.
    a. Simplex
    b. Half-duplex
    c. Full-duplex
    d. Automatic

Copyrighted material

21. In a network with 25 computers, which topology would require the most extensive cabling?
    a. Mesh
    b. Star
    c. Bus
    d. Ring
22. A television broadcast is an example of _____ transmission.
    a. Simplex
    b. Half-duplex
    c. Full-duplex
    d. Automatic
23. A _____ connection provides a dedicated link between two devices.
    a. Point-to-point
    b. Multipoint
    c. Primary
    d. Secondary
24. In a _____ connection, more than two devices can share a single link.
    a. Point-to-point
    b. Multipoint
    c. Primary
    d. Secondary
25. In _____ transmission, the channel capacity is shared by both communicating devices at all times.
    a. Simplex
    b. Half-duplex
    c. Full-duplex
    d. Half-simplex
26. A cable break in a _____ topology stops all transmission.
    a. Mesh
    b. Bus
    c. Star
    d. Primary
27. Which organization has authority over interstate and international commerce in the communications field?
    a. ITU-T
    b. IEEE
    c. FCC
    d. ISO

Copyrighted material

Exercises

28. Assume six devices are arranged in a mesh topology. How many cables are needed? How many ports are needed for each device?
29. For each of the following four networks, discuss the consequences if a connection fails.
    a. Five devices arranged in a mesh topology
    b. Five devices arranged in a star topology (not counting the hub)
    c. Five devices arranged in a bus topology
    d. Five devices arranged in a ring topology
30. Draw a hybrid topology with a star backbone and three ring networks.
31. Draw a hybrid topology with a ring backbone and two bus networks.
32. Draw a hybrid topology with a bus backbone connecting two ring backbones. Each ring backbone connects three star networks.
33. Draw a hybrid topology with a star backbone connecting two bus backbones. Each bus backbone connects three ring networks.
34. Find three standards defined by ISO.
35. Find three standards defined by ITU-T.
36. Find three standards defined by ANSI.
37. Find three standards defined by IEEE.
38. Find three standards defined by EIA.
39. Give two instances of how networks are a part of your life today.
40. When a party makes a local telephone call to another party, is this a point-to-point or multipoint connection? Explain your answer.

Copyrighted material

Copyrighted material

CHAPTER 2

Network Models

A network uses a combination of hardware and software to send data from one location to another. The hardware consists of the physical equipment that carries signals from one point of the network to another. However, the services that we expect from a network are more complex than just sending a signal from a source computer to a destination computer. In addition to hardware, we need software.

We can compare the task of networking to the task of solving a mathematics problem with a computer. The fundamental job of solving the problem in a computer is done by computer hardware. However, this is a very tedious task if only hardware is used. We would need switches for every memory location to store and manipulate data. The task is much easier if software is in the picture. At the highest level, a program can direct the problem-solving process; the details of how this is done by the actual hardware can be left to the layers of software that are called by higher levels.

There is a comparable situation with the computer network. The task of sending an email from one point in the world to another can be broken into several tasks, each performed by a separate software package. Each piece of software uses the services of another software package to do its job. At the lowest layer, a signal, or a set of signals, is sent from the source computer to the destination computer.

In this chapter, we give a general idea of the layers of a network and discuss the functions of each. Detailed descriptions of these layers follow in later chapters.

2.1 LAYERED TASKS

We use the concept of layers in our daily life. As an example, let us consider two friends who communicate through postal mail. The process of sending a letter to a friend would be complex if there were not services available from the post office. Figure 2.1 shows how this task is done.

Sender, Receiver, and Carrier

It is obvious that we have a sender, a receiver, and a carrier that transports the letter. There is a hierarchy of tasks.

Copyrighted material

Figure 2.1 *Sending a letter*

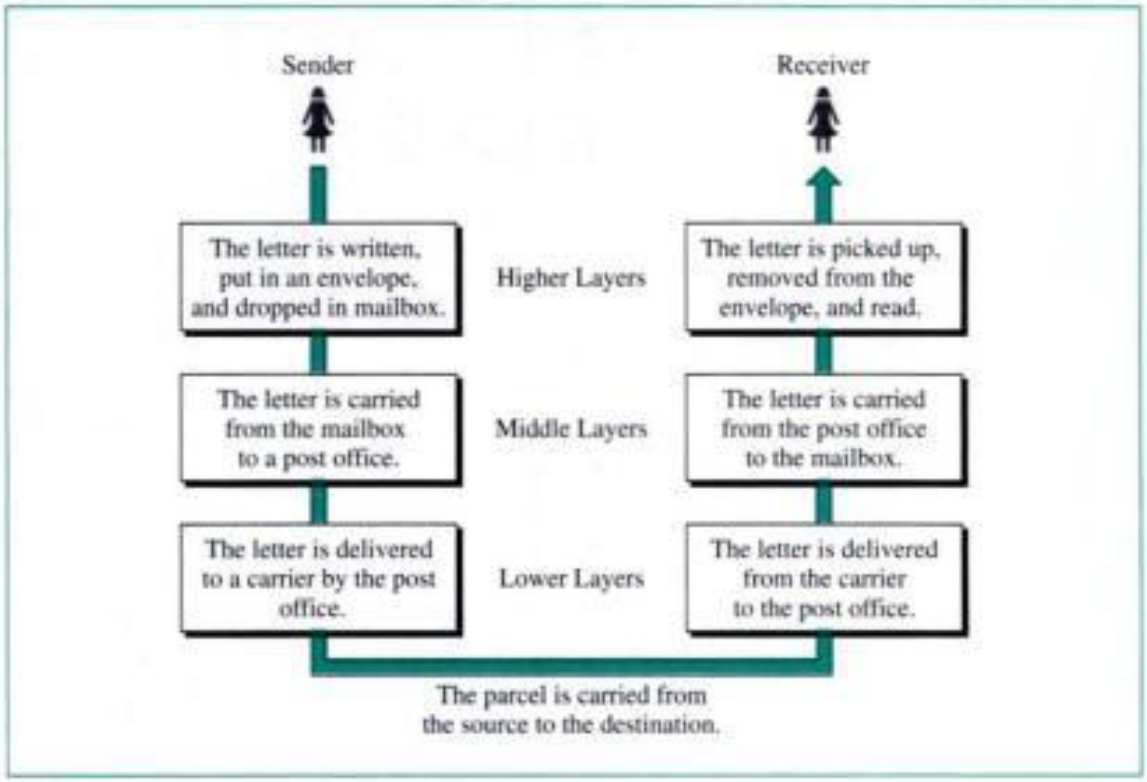

At the Sender Site

Let us first describe, in order, the activities that take place at the sender site.

- **Higher layer.** The sender writes the letter, inserts the letter in an envelope, writes the sender and receiver addresses, and drops the letter in a mailbox.
- **Middle layer.** The letter is picked up by a letter carrier and delivered to the post office.
- **Lower layer.** The letter is sorted at the post office; a carrier transports the letter.

On the Way

The letter is then on its way to the recipient. On the way to the recipient's local post office, it may actually go through a central office. In addition, the letter may be transported by truck, train, airplane, boat, or a combination.

At the Receiver Site

- **Lower layer.** The carrier transports the letter to the post office.
- **Middle layer.** The letter is sorted and delivered to the recipient's mailbox.
- **Higher layer.** The receiver picks up the letter, opens the envelope, and reads it.

Hierarchy

According to our analysis, there are three different activities at the sender site and another three activities at the receiver site. The task of transporting the letter between

Copyrighted material

the sender and the receiver is done by the carrier. Something which is not obvious immediately is that the tasks must be done in the order given in the hierarchy. At the sender site, the letter must be written and dropped in the mailbox before being picked up by the letter carrier and delivered to the post office. At the receiver site, the letter must be dropped in the recipient mailbox before being picked up and read by the recipient.

Services

Each layer at the sending site uses the services of the layer immediately below it. The sender at the higher layer uses the services of the middle layer. The middle layer uses the services of the lower layer. The lower layer uses the services of the carrier.

2.2 INTERNET MODEL

The layered protocol stack that dominates data communications and networking today is the five-layer **Internet model,** sometimes called the **TCP/IP protocol suite** (see Fig. 2.2). The model is composed of five ordered layers: physical (layer 1), data link (layer 2), network (layer 3), transport (layer 4), and application (layer 5). Figure 2.3 shows the layers involved when a message is sent from device A to device B. As the message travels from A to B, it may pass through many intermediate nodes. These intermediate nodes usually involve only the first three layers of the model.

Figure 2.2 *Internet layers*

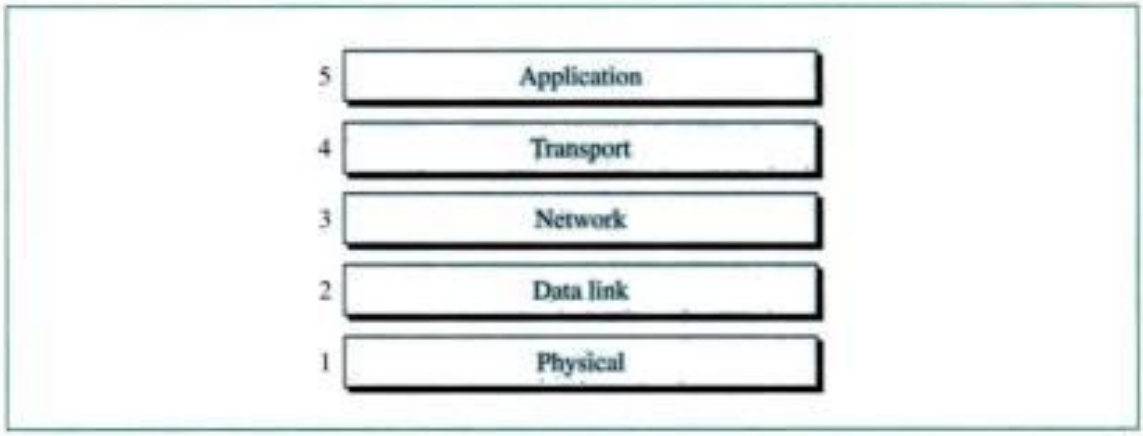

In developing the model, the designers distilled the process of transmitting data to its most fundamental elements. They identified which networking functions had related uses and collected those functions into discrete groups that became the layers. Each layer defines a family of functions distinct from those of the other layers. By defining and localizing functionality in this fashion, the designers created an architecture that is both comprehensive and flexible.

Within a single machine, each layer calls upon the services of the layer just below it. Layer 3, for example, uses the services provided by layer 2 and provides services for layer 4. Between machines, layer x on one machine communicates with layer x on another machine. This communication is governed by an agreed-upon series of rules

Copyrighted material

Figure 2.3 *Peer-to-peer processes*

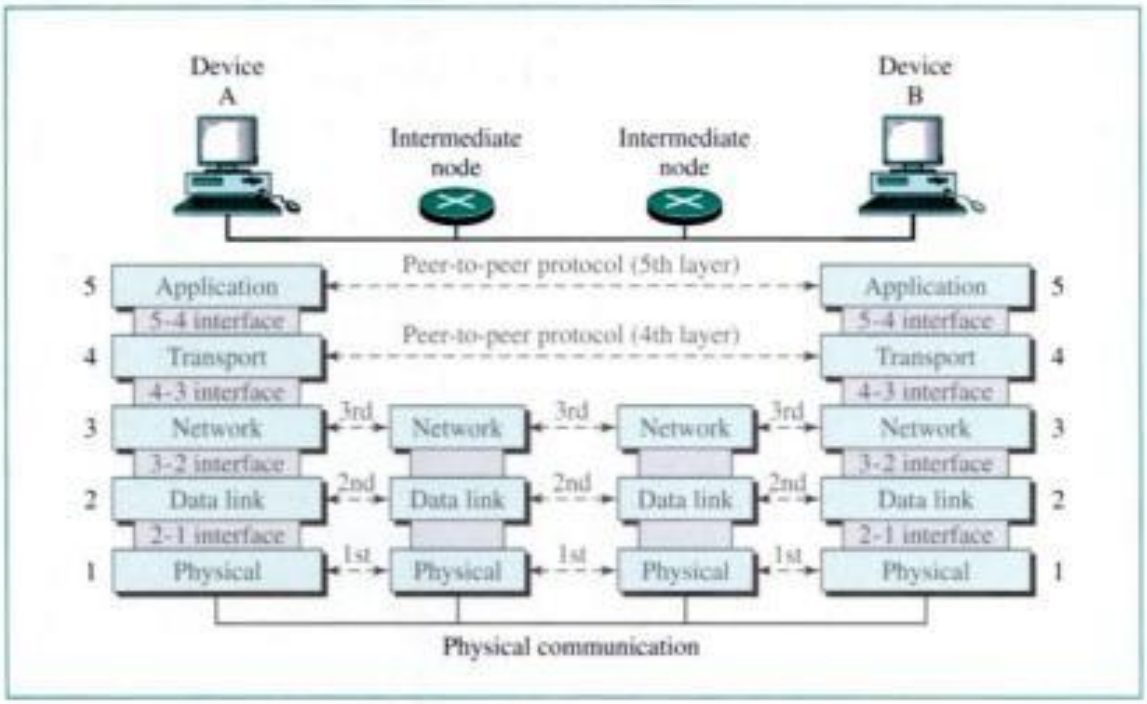

and conventions called protocols. The processes on each machine that communicate at a given layer are called **peer-to-peer processes.** Communication between machines is therefore a peer-to-peer process using the protocols appropriate to a given layer.

Peer-to-Peer Processes

At the physical layer, communication is direct: In Figure 2.3, device A sends a stream of bits to device B. At the higher layers, however, communication must move down through the layers on device A, over to device B, and then back up through the layers. Each layer in the sending device adds its own information to the message it receives from the layer just above it and passes the whole package to the layer just below it.

At layer 1 the entire package is converted to a form that can be transferred to the receiving device. At the receiving machine, the message is unwrapped layer by layer, with each process receiving and removing the data meant for it. For example, layer 2 removes the data meant for it, then passes the rest to layer 3. Layer 3 then removes the data meant for it and passes the rest to layer 4, and so on.

Interfaces Between Layers

The passing of the data and network information down through the layers of the sending device and back up through the layers of the receiving device is made possible by an **interface** between each pair of adjacent layers. Each interface defines what information and services a layer must provide for the layer above it. Well-defined interfaces and layer functions provide modularity to a network. As long as a layer provides the expected services to the layer above it, the specific implementation of its functions can be modified or replaced without requiring changes to the surrounding layers.

Copyrighted material

Organization of the Layers

The five layers can be thought of as belonging to three subgroups. Layers 1, 2, and 3—physical, data link, and network—are the network support layers; they deal with the physical aspects of moving data from one device to another (such as electrical specifications, physical connections, physical addressing, and transport timing and reliability). Layer 5—application—can be thought of as the user support layer; it allows interoperability among unrelated software systems. Layer 4, the transport layer, links the two subgroups and ensures that what the lower layers have transmitted is in a form that the upper layers can use.

In Figure 2.4, which gives an overall view of the layers, L5 data means the data unit at layer 5, L4 data means the data unit at layer 4, and so on. The process starts at layer 5 (the application layer), then moves from layer to layer in descending, sequential order. At each layer, a **header** can be added to the data unit. At layer 2, a **trailer** is added as well. When the formatted data unit passes through the physical layer (layer 1), it is changed into an electromagnetic signal and transported along a physical link.

Figure 2.4 *An exchange using the Internet model*

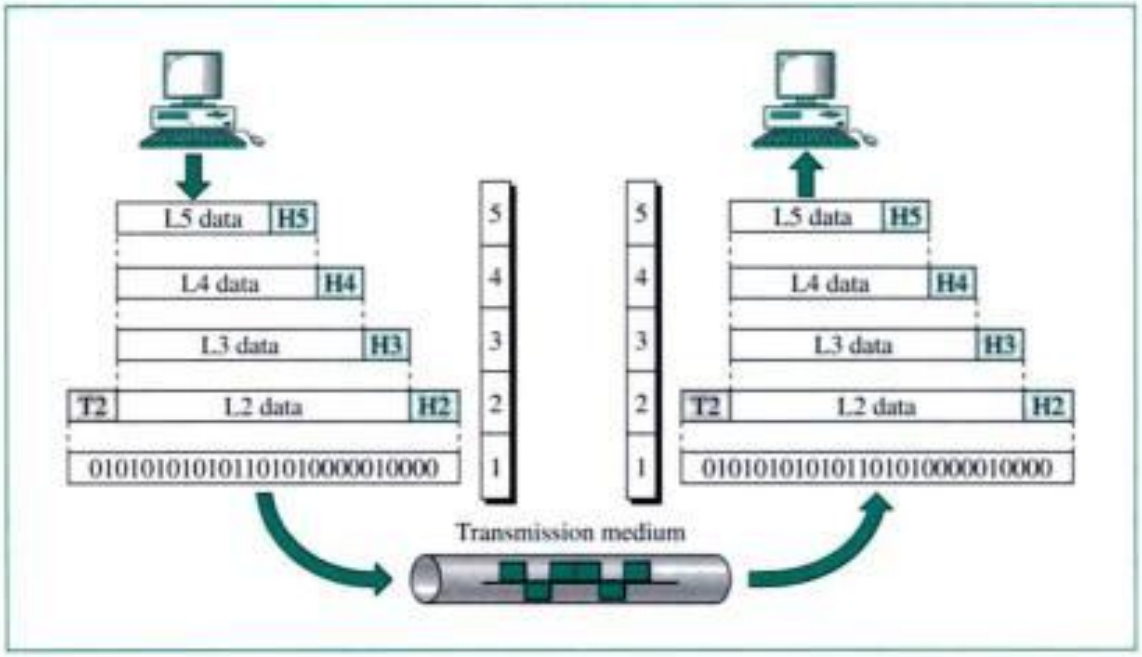

Upon reaching its destination, the signal passes into layer 1 and is transformed back into digital form. The data units then move back up through the layers. As each block of data reaches the next-higher layer, the headers and trailers attached to it at the corresponding sending layer are removed, and actions appropriate to that layer are taken. By the time it reaches layer 5, the message is again in a form appropriate to the application and is made available to the recipient.

Functions of Layers

In this section we briefly describe the functions of each layer.

Copyrighted material

Physical Layer

The **physical layer** coordinates the functions required to transmit a bit stream over a physical medium. It deals with the mechanical and electrical specifications of the interface and transmission media. It also defines the procedures and functions that physical devices and interfaces have to perform for transmission to occur. Figure 2.5 shows the position of the physical layer with respect to the transmission media and the data link layer.

Figure 2.5 *Physical layer*

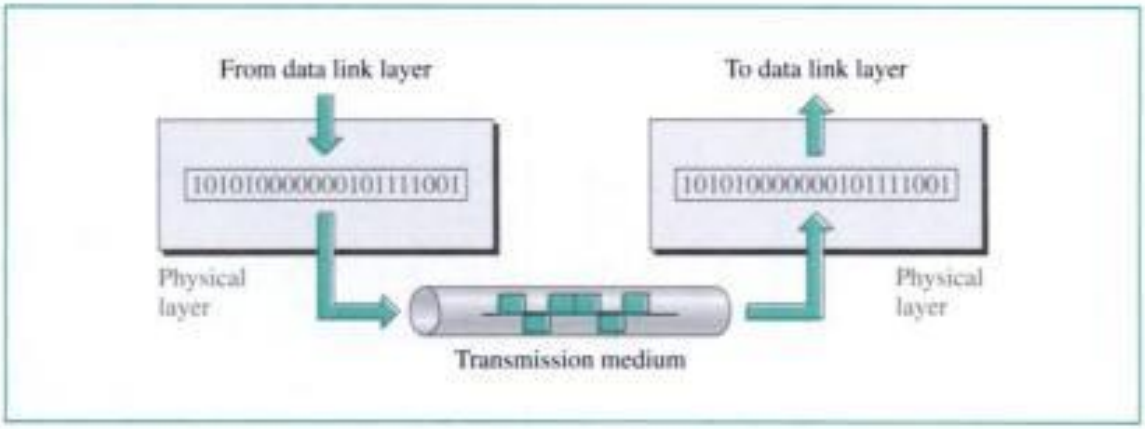

The physical layer is responsible for transmitting individual bits from one node to the next.

We discuss the physical layer in Part II of this book and include the dominant protocols designed for this layer. The major duties of the physical layer are as follows:

- **Physical characteristics of interfaces and media.** The physical layer defines the characteristics of the interface between the devices and the transmission media. It also defines the type of transmission medium (see Chapter 7).
- **Representation of bits.** The physical layer data consists of a stream of **bits** (sequence of 0s or 1s) without any interpretation. To be transmitted, bits must be encoded into signals—electrical or optical. The physical layer defines the type of representation (how 0s and 1s are changed to signals).
- **Data rate.** The **transmission rate**—the number of bits sent each second—is also defined by the physical layer. In other words, the physical layer defines the duration of a bit, which is how long it lasts.
- **Synchronization of bits.** The sender and receiver not only must use the same bit rate but also must be synchronized at the bit level. In other words, the sender and the receiver clocks must be synchronized.

Data Link Layer

The **data link layer** transforms the physical layer, a raw transmission facility, to a reliable link. It makes the physical layer appear error-free to the upper layer (network layer). Figure 2.6 shows the relationship of the data link layer to the network and physical layers.

Copyrighted material

Figure 2.6 *Data link layer*

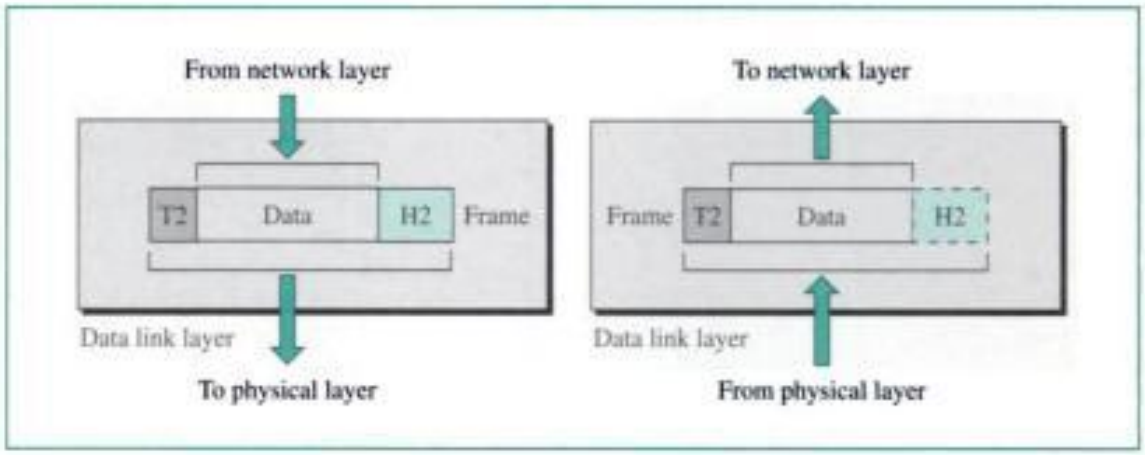

The data link layer is responsible for transmitting frames from one node to the next.

We discuss the data link layer in Part III of this book and include the dominant protocols designed for this layer. The major duties of the data link layer are as follows:

- **Framing.** The data link layer divides the stream of bits received from the network layer into manageable data units called **frames**.
- **Physical addressing.** If frames are to be distributed to different systems on the network, the data link layer adds a header to the frame to define the sender and/or receiver of the frame. If the frame is intended for a system outside the sender's network, the receiver address is the address of the connecting device that connects the network to the next one.
- **Flow control.** If the rate at which the data are absorbed by the receiver is less than the rate produced in the sender, the data link layer imposes a flow control mechanism to prevent overwhelming the receiver.
- **Error control.** The data link layer adds reliability to the physical layer by adding mechanisms to detect and retransmit damaged or lost frames. It also uses a mechanism to prevent duplication of frames. Error control is normally achieved through a trailer added to the end of the frame.
- **Access control.** When two or more devices are connected to the same link, data link layer protocols are necessary to determine which device has control over the link at any given time.

Figure 2.7 illustrates **hop-to-hop (node-to-node) delivery** by the data link layer.

Example 1

In Figure 2.8 a node with physical address 10 sends a frame to a node with physical address 87. The two nodes are connected by a link. At the data link level this frame contains physical addresses in the header. These are the only addresses needed. The rest of the header contains other information needed at this level. The trailer usually contains extra bits needed for error detection.

Copyrighted material

Figure 2.7 *Node-to-node delivery*

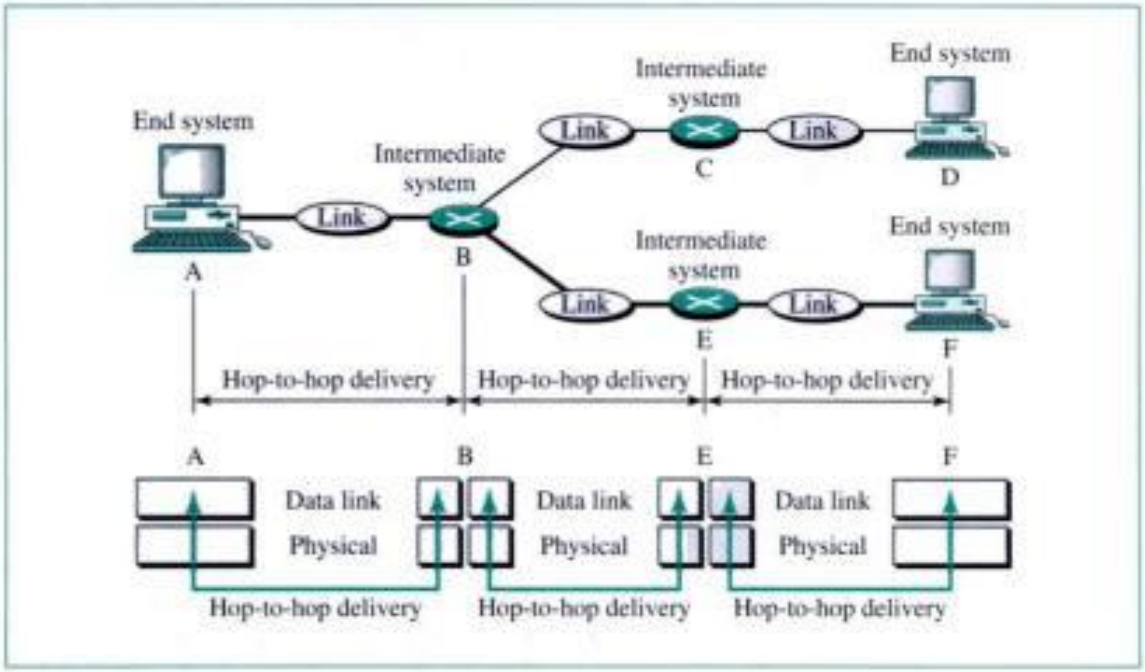

Figure 2.8 *Example 1*

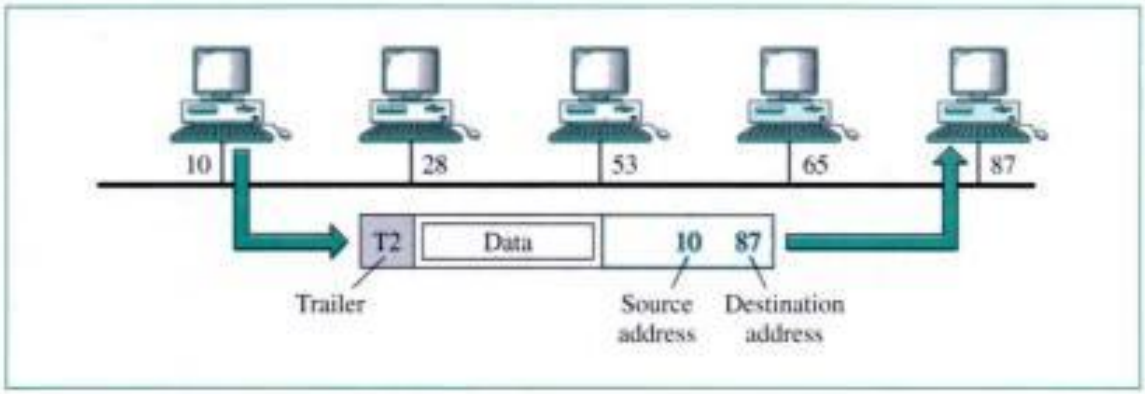

Network Layer

The **network layer** is responsible for the **source-to-destination delivery** of a packet possibly across multiple networks. Whereas the data link layer oversees the delivery of the packet between two systems on the same network, the network layer ensures that each packet gets from its point of origin to its final destination.

- If two systems are connected to the same link, there is usually no need for a network layer. However, if the two systems are attached to different networks with connecting devices between the networks, there is often a need for the network layer to accomplish source-to-destination delivery. Figure 2.9 shows the relationship of the network layer to the data link and transport layers.

We discuss the network layer in Part IV of this book and include the dominant protocols designed for this layer. The major duties of the network layer are as follows:

- **Logical addressing.** The physical addressing implemented by the data link layer handles the addressing problem locally. If a packet passes the network boundary,

Copyrighted material

Figure 2.9 *Network layer*

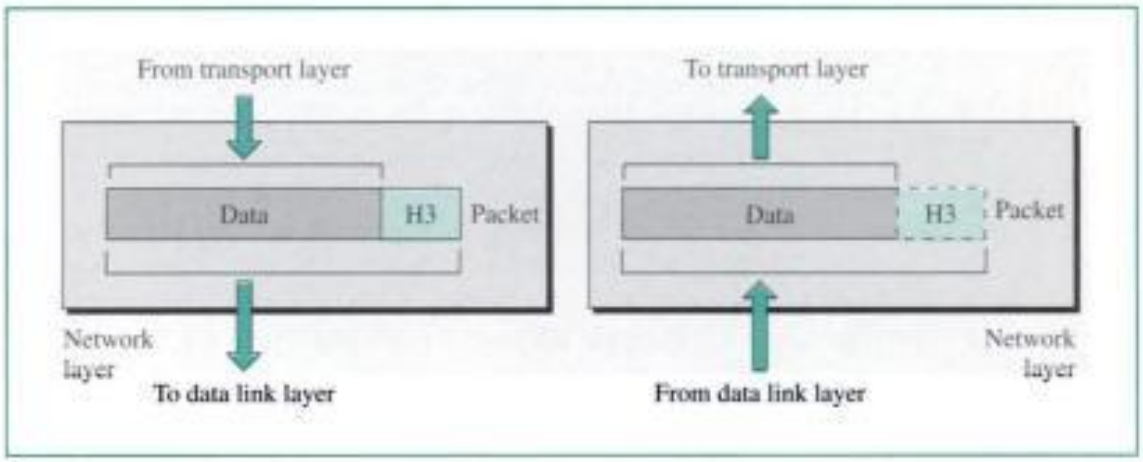

The network layer is responsible for the delivery of packets from the original source to the final destination.

we need another addressing system to help distinguish the source and destination systems. The network layer adds a header to the packet coming from the upper layer that, among other things, includes the logical addresses of the sender and receiver.

- **Routing.** When independent networks or links are connected to create an **internetwork** (network of networks) or a large network, the connecting devices (called *routers* or *switches*) route or switch the packets to their final destination. One of the functions of the network layer is to provide this mechanism.

Figure 2.10 illustrates source-to-destination delivery by the network layer.

Figure 2.10 *Source-to-destination delivery*

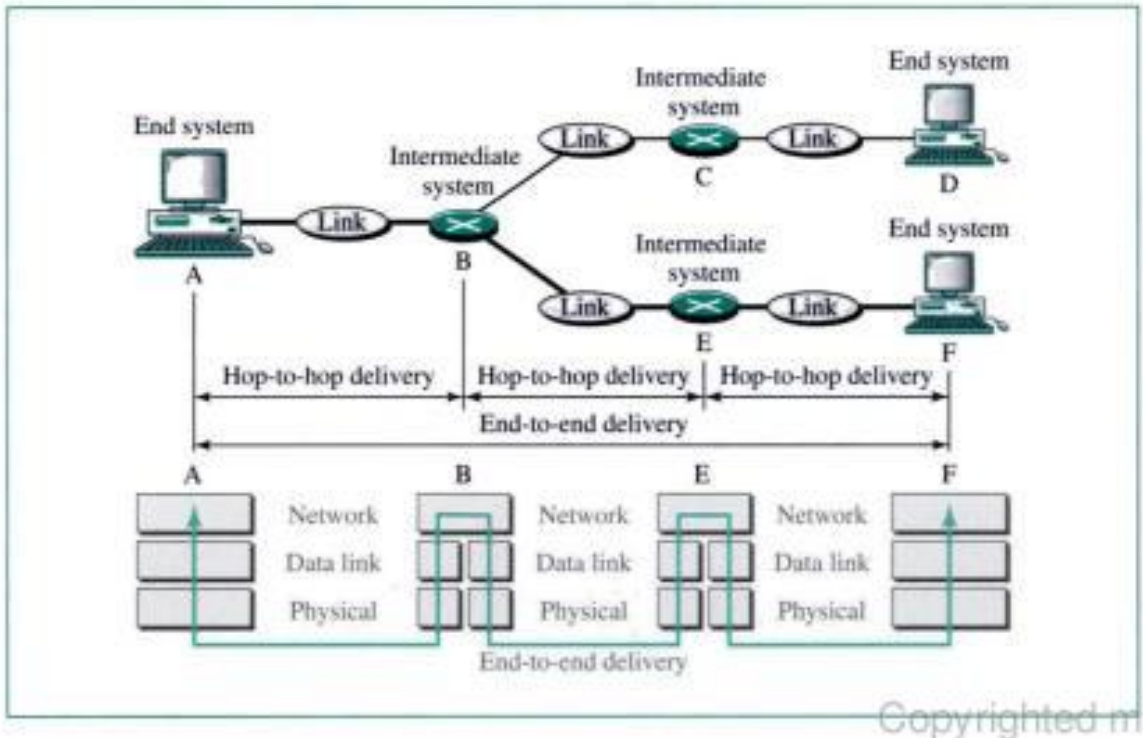

Copyrighted material

Example 2

In Figure 2.11 we want to send data from a node with network address A and physical address 10, located on one LAN, to a node with a network address P and physical address 95, located on another LAN. Because the two devices are located on different networks, we cannot use physical addresses only; the physical addresses only have local jurisdiction. What we need here are universal addresses that can pass through the LAN boundaries. The network (logical) addresses have this characteristic. The packet at the network layer contains the logical addresses, which remain the same from the original source to the final destination (A and P, respectively, in the figure). They will not change when we go from network to network. However, the physical addresses will change as the packet moves from one network to another. The box with the R is a router (internetwork device), which we will discuss in Chapter 16.

Figure 2.11 *Example 2*

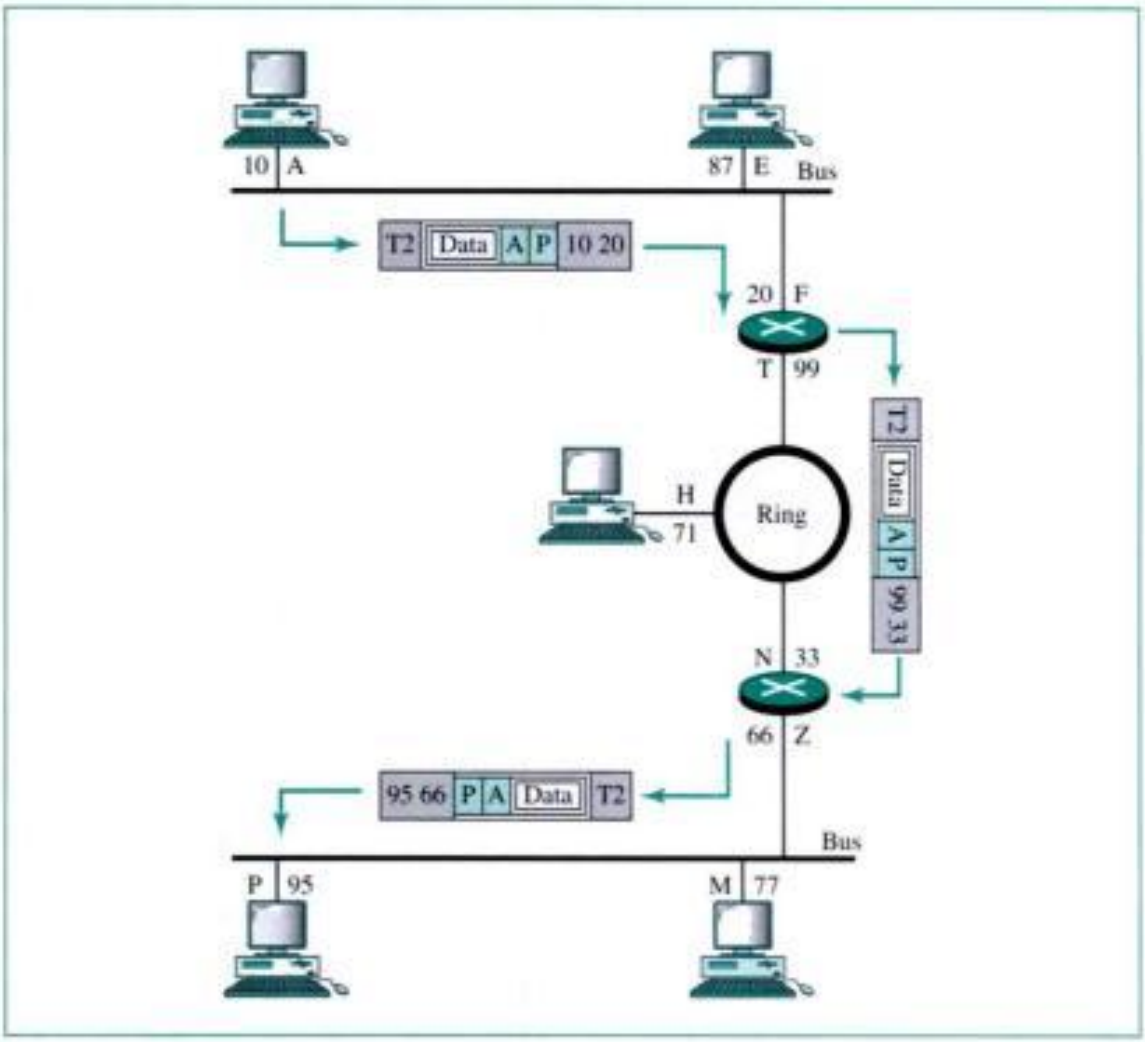

Transport Layer

The **transport layer** is responsible for **process-to-process delivery** of the entire message. Whereas the network layer oversees host-to-destination delivery of individual packets, it does not recognize any relationship between those packets. It treats each one independently, as though each piece belonged to a separate message, whether or not it does. The

Copyrighted material

transport layer, on the other hand, ensures that the whole message arrives intact and in order, overseeing both error control and flow control at the process-to-process level. Figure 2.12 shows the relationship of the transport layer to the network and session layers.

Figure 2.12 *Transport layer*

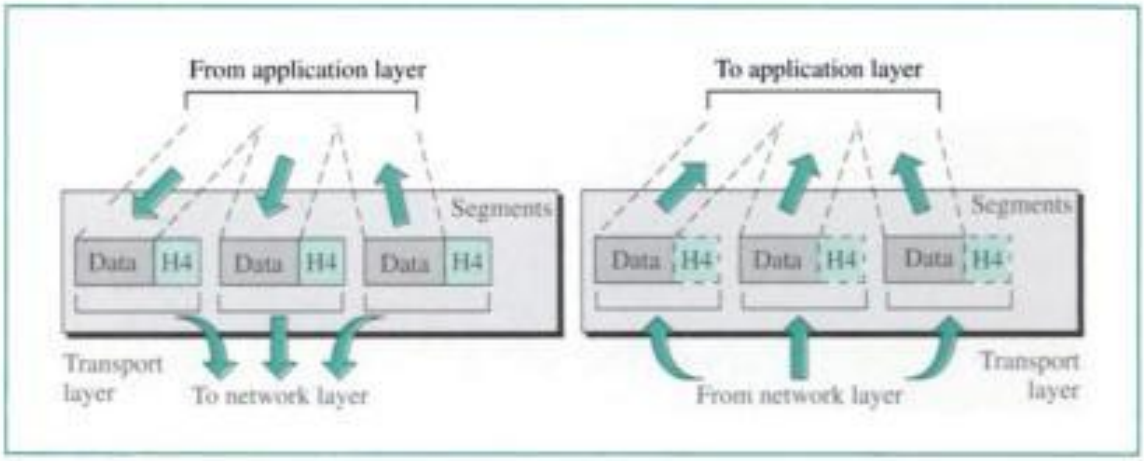

The transport layer is responsible for delivery of a message from one process to another.

We discuss the transport layer in Part V of this book and include the dominant protocols designed for this layer. The major duties of the transport layer are as follows:

- **Port addressing.** Computers often run several processes (running programs) at the same time. For this reason, process-to-process delivery means delivery not only from one computer to the next but also from a specific process on one computer to a specific process on the other. The transport layer header must therefore include a type of address called a **port address.** The network layer gets each packet to the correct computer; the transport layer gets the entire message to the correct process on that computer.
- **Segmentation and reassembly.** A message is divided into transmittable segments, each segment containing a sequence number. These numbers enable the transport layer to reassemble the message correctly upon arrival at the destination and to identify and replace packets that were lost in the transmission.
- **Connection control.** The transport layer can be either connectionless or connection-oriented. A connectionless transport layer treats each segment as an independent packet and delivers it to the transport layer at the destination machine. A connection-oriented transport layer makes a connection with the transport layer at the destination machine first before delivering the packets. After all the data are transferred, the connection is terminated.
- **Flow control.** Like the data link layer, the transport layer is responsible for flow control. However, flow control at this layer is performed end to end rather than across a single link.
- **Error control.** Like the data link layer, the transport layer is responsible for error control. However, error control at this layer is performed end to end rather than

Copyrighted material

across a single link. The sending transport layer makes sure that the entire message arrives at the receiving transport layer without **error** (damage, loss, or duplication). Error correction is usually achieved through retransmission.

Figure 2.13 illustrates a process-to-process delivery by the transport layer.

Figure 2.13 *Reliable process-to-process delivery of a message*

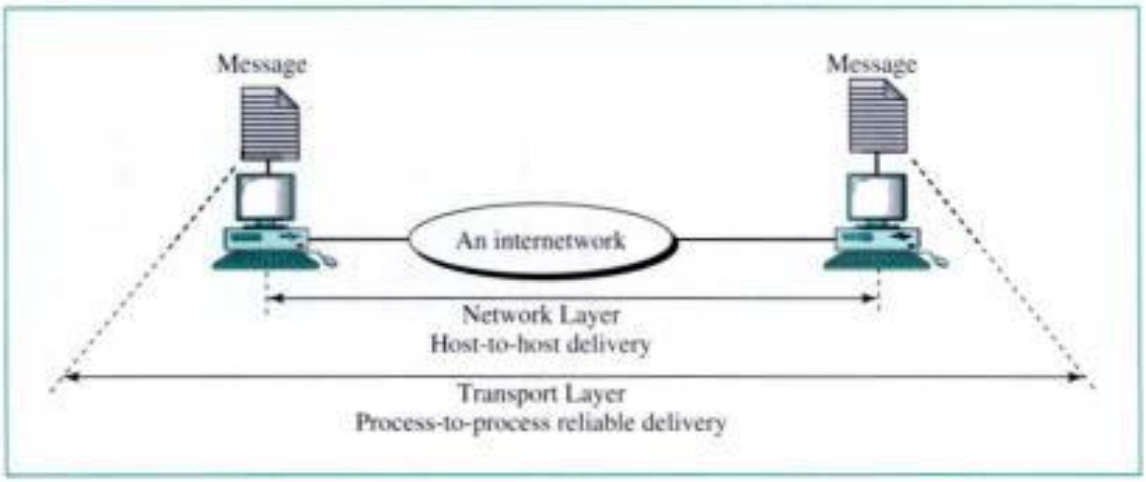

Example 3

Figure 2.14 shows an example of transport layer communication. Data coming from the upper layers have port addresses *j* and *k* (*j* is the address of the sending process, and *k* is the address of the receiving process). Since the data size is larger than the network layer can handle, the data are split into two packets, each packet retaining the port addresses (*j* and *k*). Then in the network layer, network addresses (A and P) are added to each packet. The packets can travel on different

Figure 2.14 *Example 3*

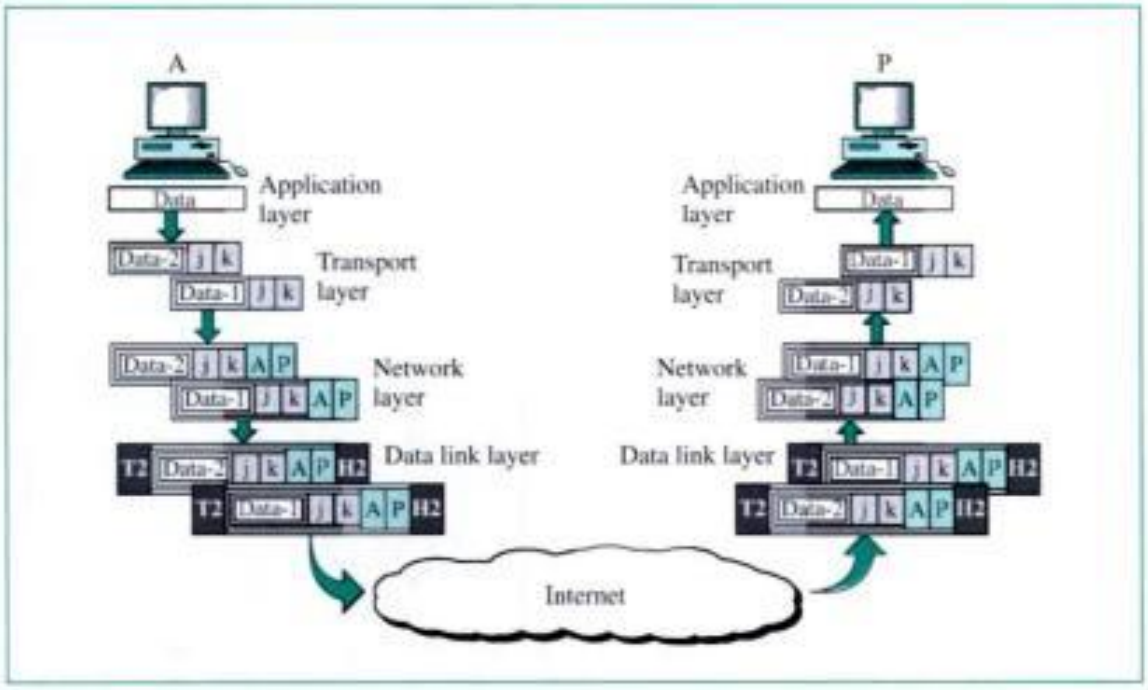

Copyrighted material

paths and arrive at the destination either in order or out of order. The two packets are delivered to the destination transport layer, which is responsible for removing the transport layer headers and combining the two pieces of data for delivery to the application layer.

Application Layer

The **application layer** enables the user, whether human or software, to access the network. It provides user interfaces and support for services such as electronic mail, remote file access and transfer, access to the World Wide Web, and so on.

Figure 2.15 shows the relationship of the application layer to the user and the transport layer.

Figure 2.15 *Application layer*

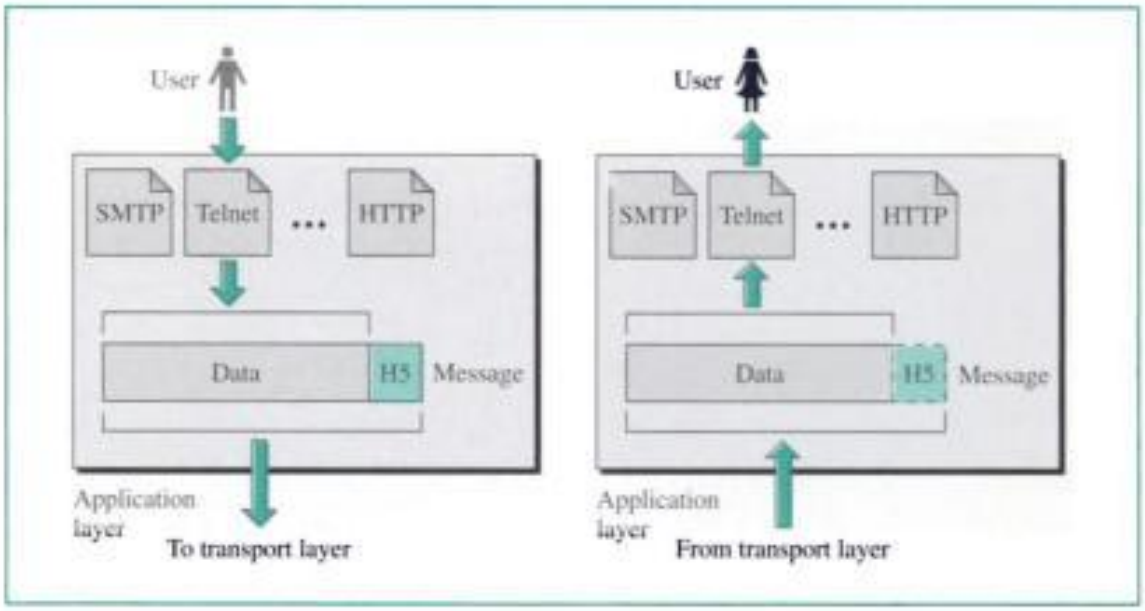

The application layer is responsible for providing services to the user.

We discuss the application layer in Part VI of this book and include the dominant protocols designed for this layer. The major duties of the application layer are as follows:

- **Mail services.** This application is the basis for email forwarding and storage.
- **File transfer and access.** This application allows a user to access files in a remote host (to make changes or read data), to retrieve files from a remote computer for use in the local computer, and to manage or control files in a remote computer locally.
- **Remote log-in.** A user can log into a remote computer and access the resources of that computer.
- **Accessing the World Wide Web.** The most common application today is the access of the World Wide Web (WWW).

Summary of Layers

Figure 2.16 summarizes the duties of each layer.

Copyrighted material

Figure 2.16 *Summary of duties*

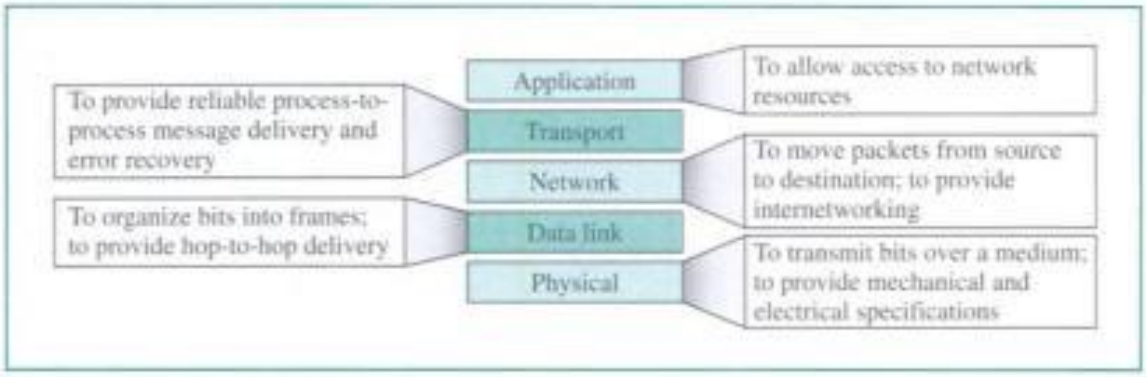

2.3 OSI MODEL

Another model, the **Open Systems Interconnection,** or **OSI,** model, was designed by the International Organization for Standardization (ISO). It is a seven-layer model. OSI was never seriously implemented as a protocol stack, however; it is a theoretical model designed to show how a protocol stack should be implemented. Figure 2.17 shows the seven layers in the OSI model.

Figure 2.17 *OSI model*

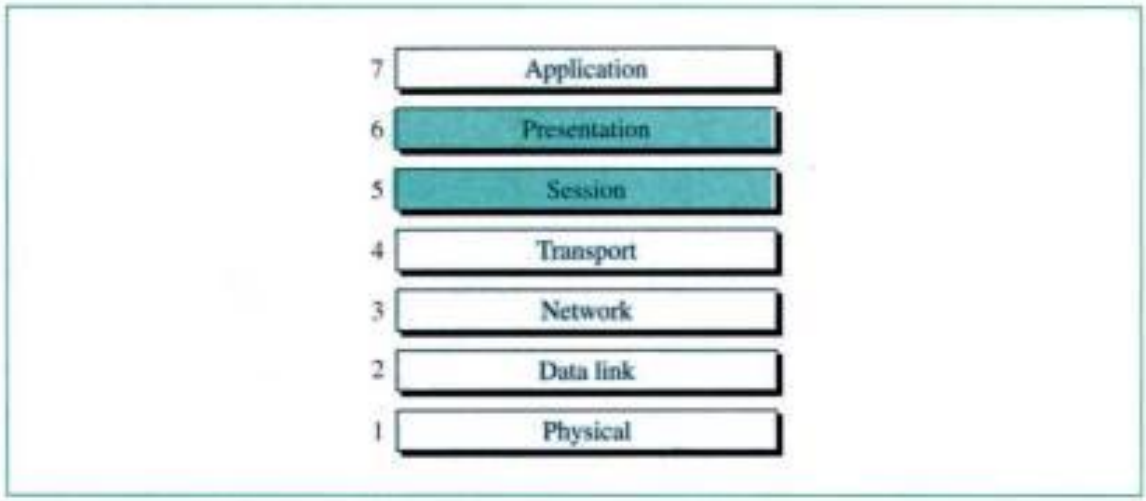

As Figure 2.17 shows, OSI defines two extra layers: the session and presentation layers. The **session layer** is the network *dialog controller*. It was designed to establish, maintain, and synchronize the interaction between communicating systems.

The **presentation layer** was designed to handle the syntax and semantics of the information exchanged between the two systems. It was designed for data translation, encryption, decryption, and compression.

The OSI model is briefly discussed in Appendix C.

Copyrighted material

Today, however, the duties of these two layers are handled by other layers; for example, encryption and decryption occur at several layers. Data are compressed at the application layer by the protocols at that level. For these reasons, we concentrate on the five-layer Internet model.

2.4 KEY TERMS

access control
application layer
connection control
data link layer
error
error control
flow control
frame
header
hop-to-hop delivery
interface
Internet model
internetwork
logical addressing
mail service
network layer
node-to-node delivery
Open Systems Interconnection (OSI) model
peer-to-peer process
physical addressing
physical layer
port address
presentation layer
process-to-process delivery
routing
segmentation
session layer
source-to-destination delivery
TCP/IP protocol suite
trailer
transport layer

2.5 SUMMARY

- The five-layer model provides guidelines for the development of universally compatible networking protocols.
- The physical, data link, and network layers are the network support layers.
- The application layer is the user support layer.
- The transport layer links the network support layers and the user support layer.
- The physical layer coordinates the functions required to transmit a bit stream over a physical medium.
- The data link layer is responsible for delivering data units from one station to the next without errors.
- The network layer is responsible for the source-to-destination delivery of a packet across multiple network links.
- The transport layer is responsible for the process-to-process delivery of the entire message.
- The application layer enables the users to access the network.

Copyrighted material

2.6 PRACTICE SET

Review Questions

1. List the layers of the Internet model.
2. Which layers in the Internet model are the network support layers?
3. Which layer in the Internet model is the user support layer?
4. What is the difference between network layer delivery and transport layer delivery?
5. What is a peer-to-peer process?
6. How does information get passed from one layer to the next in the Internet model?
7. What are headers and trailers, and how do they get added and removed?
8. What are the concerns of the physical layer in the Internet model?
9. What are the responsibilities of the data link layer in the Internet model?
10. What are the responsibilities of the network layer in the Internet model?
11. What are the responsibilities of the transport layer in the Internet model?
12. What is the difference between a port address, a logical address, and a physical address?
13. Name some services provided by the application layer in the Internet model.
14. How do the layers of the Internet model correlate to the layers of the OSI model?

Multiple-Choice Questions

15. The Internet model consists of _____ layers.
    a. Three
    b. Five
    c. Seven
    d. Eight
16. The process-to-process delivery of the entire message is the responsibility of the _____ layer.
    a. Network
    b. Transport
    c. Application
    d. Physical
17. The _____ layer is the layer closest to the transmission medium.
    a. Physical
    b. Data link
    c. Network
    d. Transport
18. Mail services are available to network users through the _____ layer.
    a. Data link
    b. Physical

Copyrighted material

c. Transport
d. Application

19. As the data packet moves from the lower to the upper layers, headers are _____.
    a. Added
    b. Subtracted
    c. Rearranged
    d. Modified
20. As the data packet moves from the upper to the lower layers, headers are _____.
    a. Added
    b. Removed
    c. Rearranged
    d. Modified
21. The _____ layer lies between the network layer and the application layer.
    a. Physical
    b. Data link
    c. Transport
    d. None of the above
22. Layer 2 lies between the physical layer and the _____ layer.
    a. Network
    b. Data link
    c. Transport
    d. None of the above
23. When data are transmitted from device A to device B, the header from A's layer 4 is read by B's _____ layer.
    a. Physical
    b. Transport
    c. Application
    d. None of the above
24. The _____ layer changes bits into electromagnetic signals.
    a. Physical
    b. Data link
    c. Transport
    d. None of the above
25. The physical layer is concerned with the transmission of _____ over the physical medium.
    a. Programs
    b. Dialogs
    c. Protocols
    d. Bits

Copyrighted material

26. Which layer functions as a liaison between user support layers and network support layers?
    a. Network layer
    b. Physical layer
    c. Transport layer
    d. Application layer
27. What is the main function of the transport layer?
    a. Node-to-node delivery
    b. Process-to-process delivery
    c. Synchronization
    d. Updating and maintenance of routing tables
28. Which of the following is an application layer service?
    a. Remote log-in
    b. File transfer and access
    c. Mail service
    d. All the above

Exercises

29. Match the following to one of the five Internet layers.
    a. Route determination
    b. Flow control
    c. Interface to physical world
    d. Provides access to the network for the end user
    e. Packet switching
30. Match the following to one of the five Internet layers.
    a. Reliable process-to-process data transportation
    b. Network selection
    c. Routing
    d. Provides user services such as email and file transfer
    e. Transmission of bit stream across physical medium
31. Match the following to one of the five Internet layers.
    a. Communicates directly with user's application program
    b. Error correction and retransmission
    c. Mechanical, electrical, and functional interface
    d. Responsibility for delivery between adjacent nodes
    e. Reassembly of data packets

Copyrighted material

PART 2

Physical Layer

We start the discussion of the Internet model with the bottom-most layer, the physical layer. It is the layer that actually interacts with the transmission media, the physical part of the network that connects network components together. This layer is involved in physically carrying information from one node in the network to the next. Figure 1 shows the position of the physical layer in the 5-layer Internet model.

Figure 1 *Position of the physical layer*

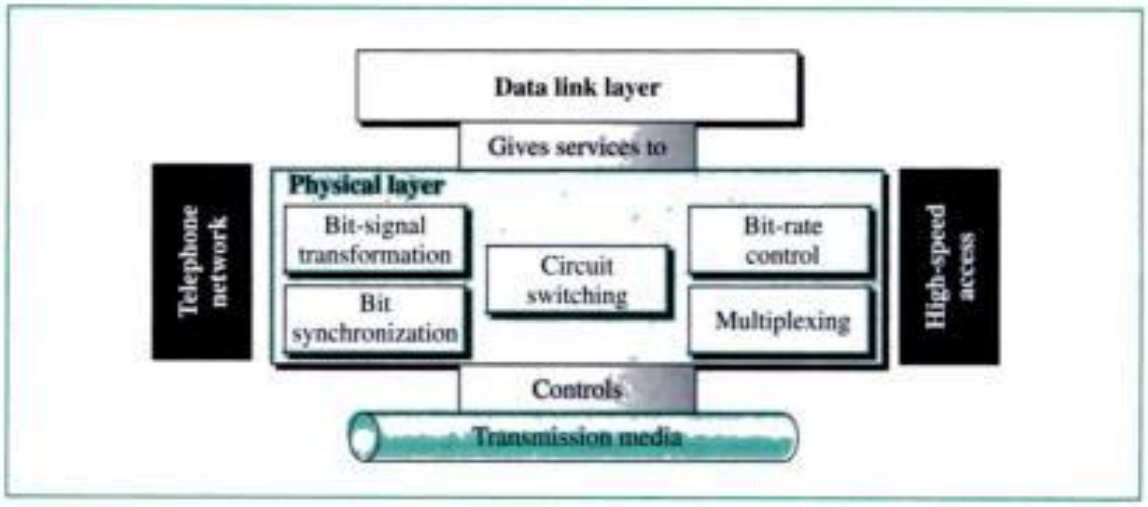

The physical layer has complex tasks to perform. One major task is to provide services for the data link layer. The data in the data link layer consists of 0s and 1s organized into frames that are ready to be sent across the transmission medium. This stream of 0s and 1s must first be converted into another entity: signals. One of the services provided by the physical layer is to create a signal that represents this stream of bits.

The physical layer must also take care of the physical network, the transmission medium. The transmission medium is a passive entity; it has no internal program or logic for control like other layers. The transmission medium must be controlled by the physical layer. The physical layer decides on the directions of data flow. The physical layer decides on the number of logical channels for transporting data coming from different sources.

Copyrighted material

Services

The physical layer transfers a stream of bits (in the form of a signal) from the sender to the receiver. The transfer is node-to-node, from one node to the next. The physical layers of the two adjacent nodes provide a logical pipe through which the bits can travel. Figure 2 shows the general services offered by the physical layer.

Figure 2 *Physical layer services*

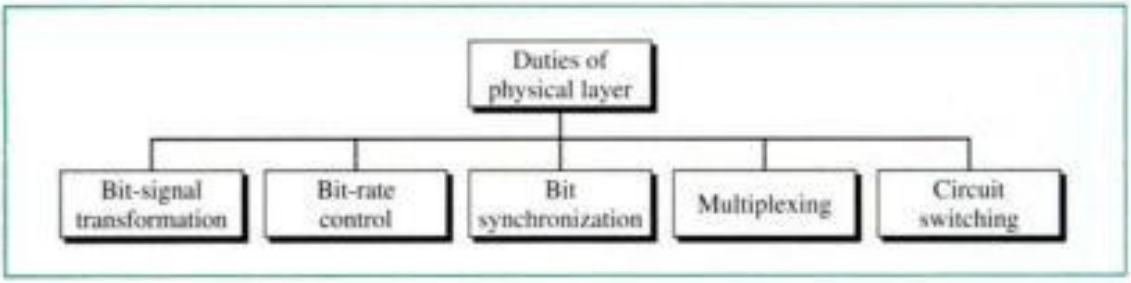

Bit-to-Signal Transformation

The logical pipe under the physical layer is the transmission media (cable or air). Since a transmission medium cannot carry bits, we need to represent the bits by a signal, electromagnetic energy that can propagate through a medium.

Bit-Rate Control

Although the transmission medium determines the upper limit of the data rate, the physical layer is the controller. The design of the physical-layer hardware and software determine the data rate.

Bit-Synchronization

The timing of the bit transfer is crucial in data communications. The physical layer governs the synchronization of the bits by providing clocking mechanisms that control both the sender and the receiver.

Multiplexing

Multiplexing is the process of dividing a link, the physical medium, into logical channels for better efficiency. The physical layer, using different techniques, can do this. Although the medium itself is not actually changed, the result is several channels instead of one. Multiplexing defined in this section of the text is needed to understand access methods in later chapters.

Switching

Switching in data communications can be done in several layers. We have circuit-switching, packet-switching, and message switching. Circuit switching, a method that allows two nodes to have a dedicated link, is mostly a function of the physical layer.

Copyrighted material

Packet switching is discussed in Chapter 18 as a data-link-layer issue and in Chapter 19 as a network-layer issue.

Transmission Media

The physical layer is dependent on the transmission media to carry its bits (in signal form). Although the transmission media are not actually a part of the physical layer, the media are controlled by this layer. Media can be guided and unguided. Twisted-pair cable, coaxial cable, and fiber-optic cables are discussed in the guided media section. Radio and microwave communication are included in the unguided section.

Networks and Technologies

To connect the issues discussed in Chapters 3 to 7, we have included several examples of networks and technologies which provide services at the physical layer.

Telephone Network

Most of the networks today have their beginnings in the telephone network. Telephone networks have been around for some time and provide voice communication around the world. When the need for data communication started, the telephone network was the foundation. Data were transformed into analog signals and sent over the same networks that sent voice. We discuss the telephone network as a prelude to other specific data networks and also as a good example of a network with the physical layer issues covered in this part of the book. We also give a brief historical background of the telephone network to understand the reasons for some recent developments such as LATAs.

High Speed Access

Accessing the Internet requires a physical connection between the user and a company known as the Internet service provider. We introduce modems, an Internet access method that many users find too slow. We present two alternative technologies. DSL technology provides a faster physical connection, again using the existing telephone line. The cable TV network allows the use of some channels previously assigned for video broadcasting for data transfer to and from the Internet.

Chapters

Part two of the book covers seven chapters. Chapters 3 introduces the concepts and characteristics of signals as the vehicle for carrying data. Chapters 4 and 5 show how we can change bits into digital or analog signals. Chapter 6 is about multiplexing, an important issue due to the improvements in transmission media bandwidth. Although transmission media are located below the physical layer, it is controlled by the physical layer. We have included the discussion of media in Chapter 7. Chapter 8 discusses switching, a topic that can be related to several layers. We have, however, discussed

Copyrighted material

only circuit switching, which is mostly a physical-layer issue. To show an application of circuit switching, we have introduced the telephone network and several topics related to this network. The main purpose of most networks today is to access the Internet. Chapter 9 introduces several technologies that allow the user to access the Internet.

Copyrighted material

CHAPTER 3

Signals

One of the major concerns of the physical layer lies in moving data in the form of electromagnetic signals across a transmission medium. Whether you are collecting numerical statistics from another computer, sending animated pictures from a design workstation, or causing a bell to ring at a distant control center, you are working with the transmission of *data* across network connections.

Generally, the data usable to a person or application are not in a form that can be transmitted over a network. For example, you cannot roll up a photograph, insert it into a wire, and transmit it across town. You can, however, transmit an encoded description of the photograph. Instead of sending the actual photograph, you can use an encoder to create a stream of 1s and 0s that tells the receiving device how to reconstruct the image of the photograph.

But even 1s and 0s cannot be sent as such across network links. They must be further converted to a form that transmission media can accept. Transmission media work by conducting energy along a physical path. So a data stream of 1s and 0s must be turned into energy in the form of electromagnetic signals.

To be transmitted, data must be transformed to electromagnetic signals.

3.1 ANALOG AND DIGITAL

Both data and the signals that represent them can take either *analog* or *digital* form.

Analog and Digital Data

Data can be analog or digital. An example of **analog data** is the human voice. When someone speaks, an analog wave is created in the air. This can be captured by a microphone and converted to an analog signal or sampled later and converted to a digital signal.

An example of **digital data** is data stored in the memory of a computer in the form of 0s and 1s. It can be converted to a digital signal when it is transferred from one position to another inside or outside the computer or modulated into an analog signal and then sent through a transmission medium to another computer.

Analog and Digital Signals

Like the data they represent, **signals** can be either analog or digital. An **analog signal** has infinitely many levels of intensity over a period of time. As the wave moves from value A

Copyrighted material

to value B, it passes through and includes an infinite number of values along its path. A **digital signal,** on the other hand, can have only a limited number of defined values, often as simple as 1 and 0.

The simplest way to show signals is by plotting them on a pair of perpendicular axes. The vertical axis represents the value or strength of a signal. The horizontal axis represents the passage of time. Figure 3.1 illustrates an analog and a digital signal. The curve representing the analog signal is passing through an infinite number of points. The vertical lines of the digital signal, however, demonstrate the sudden jump the signal makes from value to value.

Signals can be analog or digital. Analog signals can have an infinite number of values in a range; digital signals can have only a limited number of values.

Figure 3.1 *Comparison of analog and digital signals*

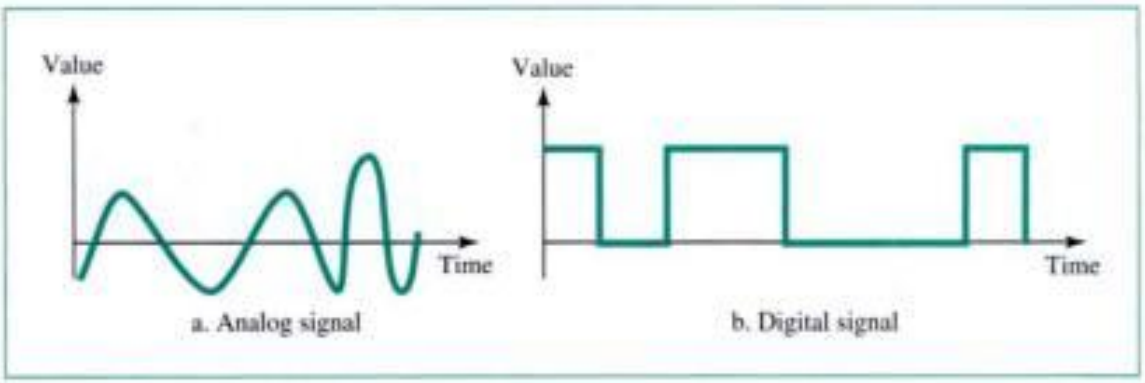

Periodic and Aperiodic Signals

Both analog and digital signals can take one of two forms: *periodic* and *aperiodic* (nonperiodic).

A **periodic signal** completes a pattern within a measurable time frame, called a **period,** and repeats that pattern over subsequent identical periods. The completion of one full pattern is called a **cycle.** An **aperiodic signal** changes without exhibiting a pattern or cycle that repeats over time.

Both analog and digital signals can be periodic or aperiodic. In data communication, however, we commonly use periodic analog signals and aperiodic digital signals to send data from one point to another.

In data communication, we commonly use periodic analog signals and aperiodic digital signals.

3.2 ANALOG SIGNALS

Analog signals can be classified as simple or composite. A simple analog signal, a **sine wave,** cannot be decomposed into simpler signals. A composite analog signal is composed of multiple sine waves.

Copyrighted material

Sine Wave

The sine wave is the most fundamental form of a periodic analog signal. Visualized as a simple oscillating curve, its change over the course of a cycle is smooth and consistent, a continuous, rolling flow. Figure 3.2 shows a sine wave. Each cycle consists of a single arc above the time axis followed by a single arc below it.

Figure 3.2 *A sine wave*

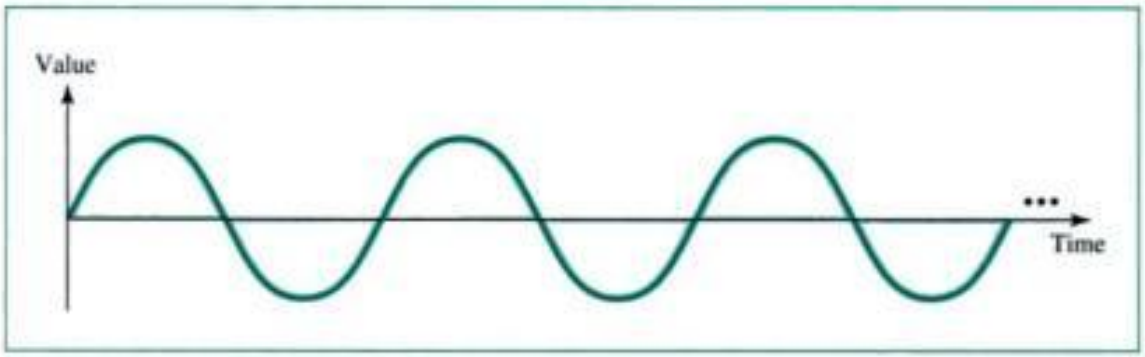

We can mathematically describe a sine wave as

$$s(t) = A\sin(2\pi ft + \phi)$$

where s is the *instantaneous amplitude*, A the *peak amplitude*, f the *frequency*, and ϕ the *phase*. These three characteristics fully describe a sine wave.

Peak Amplitude

The **peak amplitude** of a signal represents the absolute value of its highest intensity, proportional to the energy it carries. For electric signals, peak amplitude is normally measured in *volts* (see Fig. 3.3).

Figure 3.3 *Amplitude*

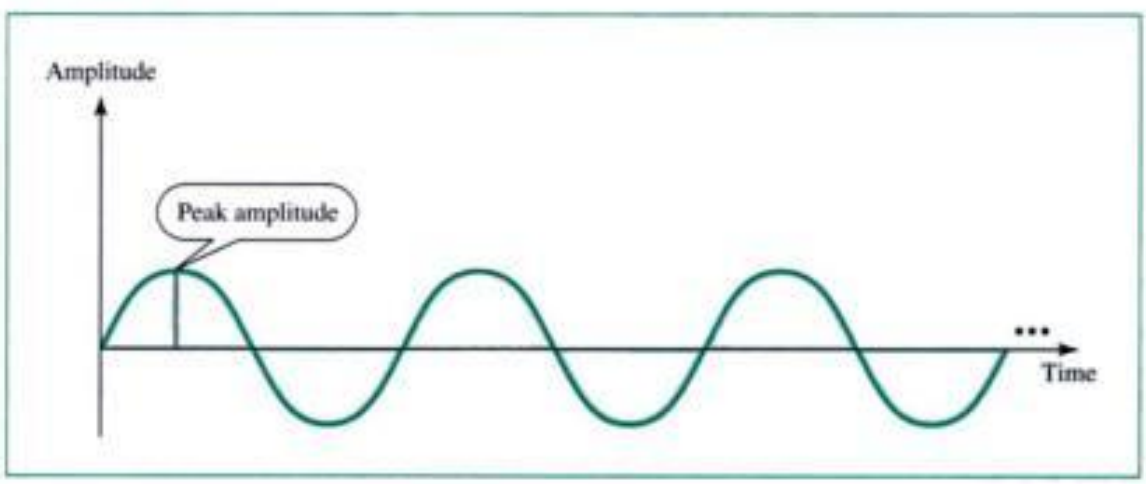

Copyrighted material

Period and Frequency

Period refers to the amount of time, in seconds, a signal needs to complete one cycle. **Frequency** refers to the number of periods in one second. Note that period and frequency are just one characteristic defined in two ways. Period is the inverse of frequency, and frequency is the inverse of period, as shown in the following formulas.

$$f = \frac{1}{T} \quad \text{and} \quad T = \frac{1}{f}$$

Frequency and period are inverses of each other.

Figure 3.4 shows the concept of period and frequency.

Figure 3.4 *Period and frequency*

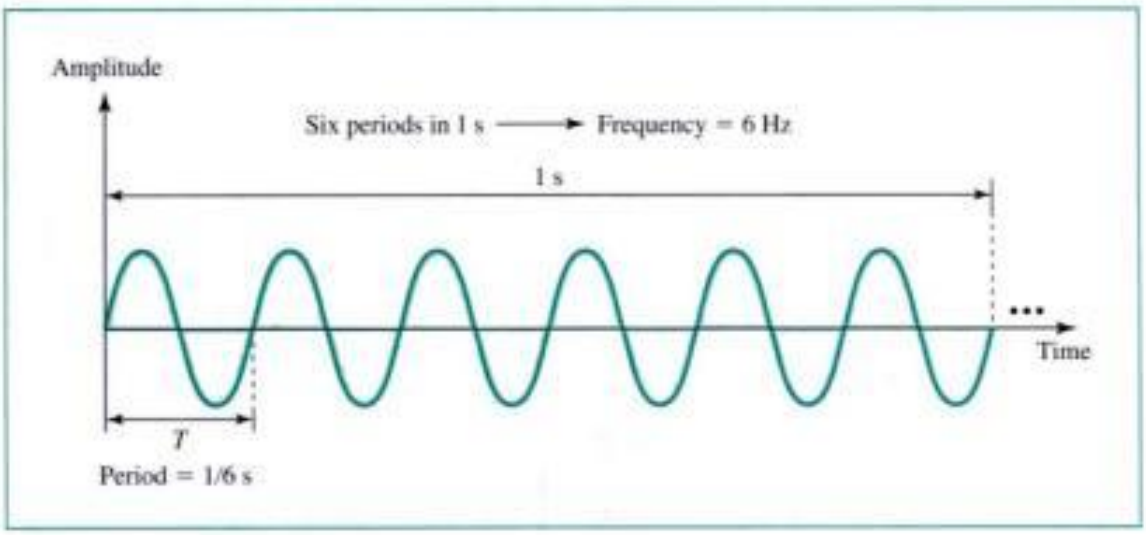

Period is formally expressed in seconds. Frequency is formally expressed in **hertz (Hz),** as shown in Table 3.1.

Table 3.1 *Units of period and frequency*

Unit	*Equivalent*	*Unit*	*Equivalent*
Seconds (s)	1 s	hertz (Hz)	1 Hz
Milliseconds (ms)	10^{-3} s	kilohertz (KHz)	10^{3} Hz
Microseconds (μs)	10^{-6} s	megahertz (MHz)	10^{6} Hz
Nanoseconds (ns)	10^{-9} s	gigahertz (GHz)	10^{9} Hz
Picoseconds (ps)	10^{-12} s	terahertz (THz)	10^{12} Hz

Copyrighted material

Example 1

Express a period of 100 ms in microseconds, and express the corresponding frequency in kilohertz.

Solution

Let us first express 100 ms in microseconds. From Table 3.1 we find the equivalent of 1 ms (1 ms is 10^{-3} s) and 1 s (1 s is 10^6 μs). We make the following substitutions:

$$100 \text{ ms} = 100 \times 10^{-3} \text{ s} = 100 \times 10^{-3} \times 10^6 \ \mu\text{s} = 10^5 \ \mu\text{s}$$

Now we use the inverse relationship to find the frequency, changing hertz to kilohertz (1 Hz is 10^{-3} KHz).

$$100 \text{ ms} = 100 \times 10^{-3} \text{ s} = 10^{-1} \text{ s} \longrightarrow f = \frac{1}{10^{-1}} \text{ Hz} = 10 \times 10^{-3} \text{ KHz} = 10^{-2} \text{ KHz}$$

More About Frequency

We know already that frequency is the relationship of a signal to time and that the frequency of a wave is the number of cycles it completes per second. But another way to look at frequency is as a measurement of the rate of change. Electromagnetic signals are oscillating waveforms; that is, they fluctuate continuously and predictably above and below a mean energy level. A 40-Hz signal has one-half the frequency of an 80-Hz signal; it completes one cycle in twice the time of the 80-Hz signal, so each cycle also takes twice as long to change from its lowest to its highest voltage levels. Frequency, therefore, though described in cycles per second (hertz), is a general measurement of the rate of change of a signal with respect to time.

Frequency is the rate of change with respect to time. Change in a short span of time means high frequency. Change over a long span of time means low frequency.

If the value of a signal changes over a very short span of time, its frequency is high. If it changes over a long span of time, its frequency is low.

Two Extremes

What if a signal does not change at all? What if it maintains a constant voltage level for the entire time it is active? In such a case, its frequency is zero. Conceptually, this idea is a simple one. If a signal does not change at all, it never completes a cycle, so its frequency is 0 Hz.

But what if a signal changes instantaneously? What if it jumps from one level to another in no time? Then its frequency is infinite. In other words, when a signal changes instantaneously, its period is zero; since frequency is the inverse of period, in this case, the frequency is 1/0, or infinite (unbounded).

If a signal does not change at all, its frequency is zero. If a signal changes instantaneously, its frequency is infinite.

Copyrighted material

Phase

The term **phase** describes the position of the waveform relative to time zero. If we think of the wave as something that can be shifted backward or forward along the time axis, phase describes the amount of that shift. It indicates the status of the first cycle.

Phase describes the position of the waveform relative to time zero.

Phase is measured in degrees or radians [360° is 2π rad; 1° is $2\pi/360$ rad, and 1 rad is $360/(2\pi)$]. A phase shift of 360° corresponds to a shift of a complete period; a phase shift of 180° corresponds to a shift of one-half of a period; and a phase shift of 90° corresponds to a shift of one-quarter of a period (see Fig. 3.5).

Figure 3.5 *Relationships between different phases*

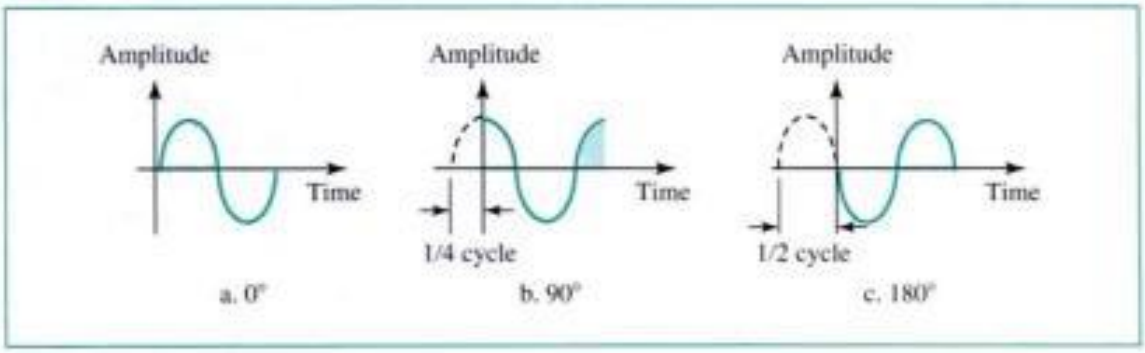

Example 2

A sine wave is offset one-sixth of a cycle with respect to time zero. What is its phase in degrees and radians?

Solution

We know that one complete cycle is 360°. Therefore, 1/6 cycle is

$$\frac{1}{6} \times 360 = 60^\circ = 60 \times \frac{2\pi}{360} \text{ rad} = \frac{\pi}{3} \text{ rad} = 1.046 \text{ rad}$$

Examples of Sine Waves

A visual comparison of signals with different characteristics can give a better understanding of these characteristics. Figure 3.6 shows three sine waves with different peak amplitudes, frequencies, and phases.

Time and Frequency Domains

A sine wave is comprehensively defined by its amplitude, frequency, and phase. We have been showing a sine wave by using what is called a **time-domain plot.** The time-domain plot shows changes in signal amplitude with respect to time (it is an amplitude versus time plot). Phase and frequency are not explicitly measured on a time-domain plot.

Copyrighted material

Figure 3.6 *Sine wave examples*

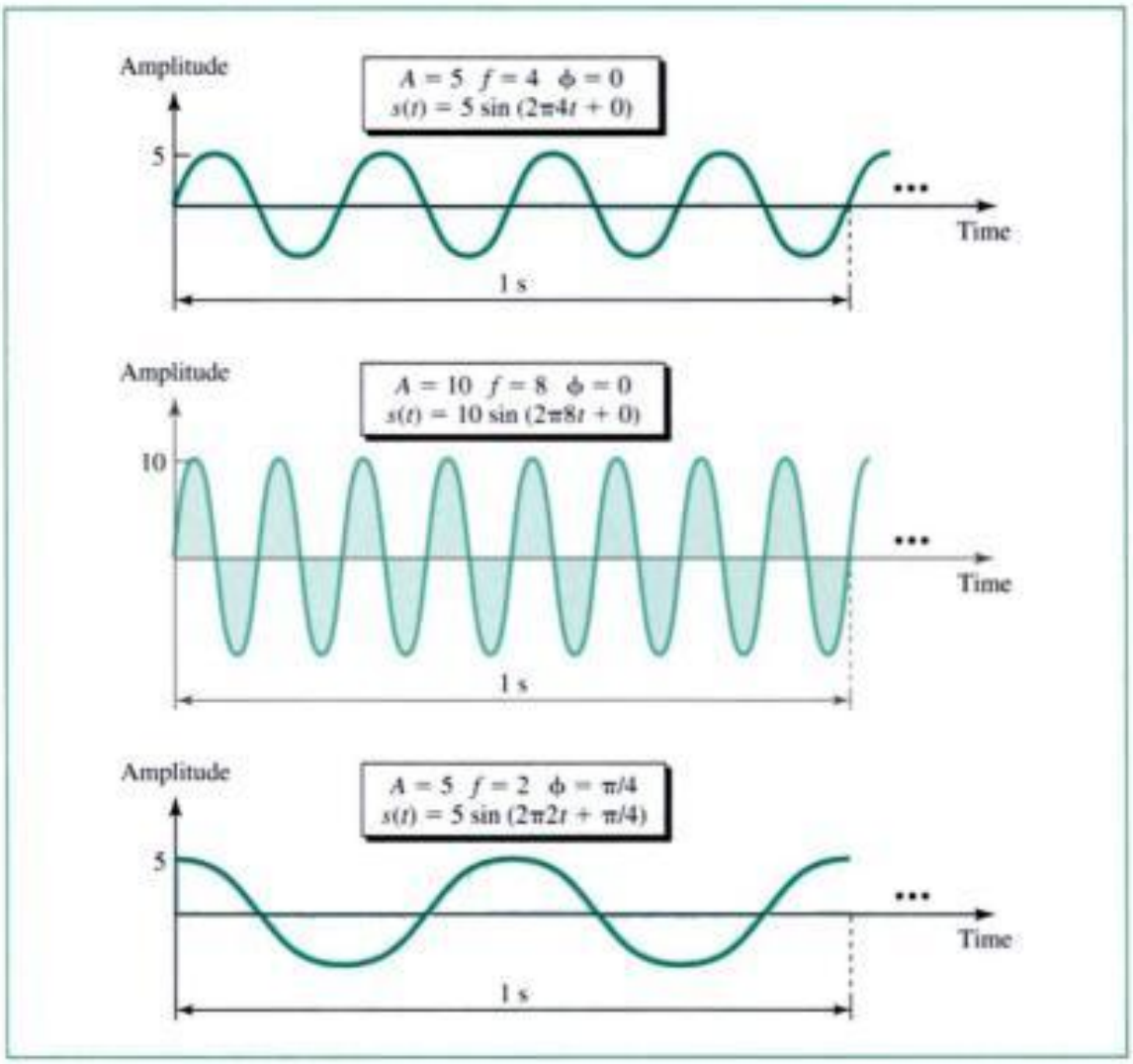

To show the relationship between amplitude and frequency, we can use what is called a **frequency-domain plot.** Figure 3.7 compares the time domain (instantaneous amplitude with respect to time) and the frequency domain (peak amplitude with respect to frequency).

The figure shows three signals with varying frequencies. Compare the models within each pair to see which sort of data each is best suited to convey. All three signals have a peak amplitude of 5 volts (V). The frequency of the first signal is 0; we show it in the frequency domain with a spike at frequency 0 and a height of 5 (its amplitude). The second signal has a frequency of 8, so we show it in the frequency domain with a spike of height 5 and a frequency of 8. Finally, the third is shown with a frequency of 16 at the same height. Note that in the frequency domain we can show two characteristics of a signal with only one spike; the position is the frequency, and the height is the peak amplitude. The phase of a signal cannot be shown in the frequency domain; we need another domain that we won't discuss in this book.

An analog signal is best represented in the frequency domain.

Copyrighted material

Figure 3.7 *Time and frequency domains*

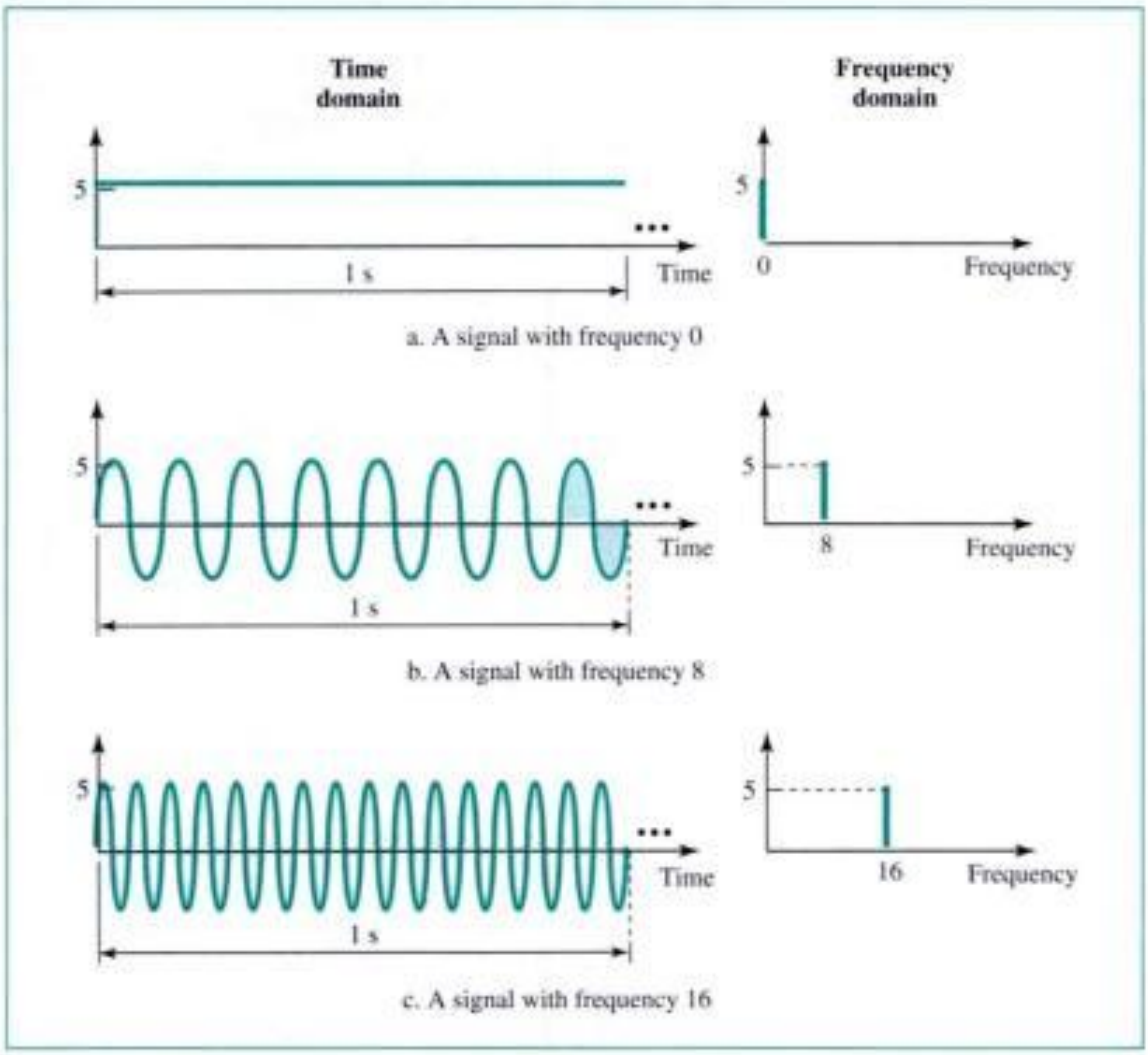

Composite Signals

So far, we have focused attention on simple signals (sine waves). Although a simple sine wave signal is very useful for some purposes, it is useless for data communications. We can send a single sine wave to carry electric energy from one place to another. For example, the power company sends a single sine wave with a frequency of 60 Hz to distribute electric energy to our houses and businesses. We can use a single sine wave to send an alarm to a security center when a burglar opens a door or a window in our house. In the first case, the sine wave is carrying energy; in the second, the presence of the signal infers danger.

If we used one single sine wave to convey a conversation over the phone, we would always hear a buzz; it would make no sense and carry no information. If we sent one single sine wave to convey data, we would always be sending alternating 1s and 0s, which does not have any communication value.

A single-frequency sine wave is not useful in data communications; we need to change one or more of its characteristics to make it useful.

Copyrighted material

If we want to use a sine wave for communication, we need to change one or more of its characteristics. For example, when the data to be sent are a 1 bit, we can send a maximum amplitude; when it is a 0 bit, we can send a minimum amplitude. However, we need to keep in mind that when we change one or more characteristics of a sine wave, it is no longer a simple sine wave. Instead, it is a **composite signal** made of many simple sine waves. A mere change in the amplitude, frequency, or phase creates a new set of frequencies. Intuitively, change is related to frequency; more change means creating more new frequencies.

When we change one or more characteristics of a single-frequency signal, it becomes a composite signal made of many frequencies.

Fourier Analysis

In the early 1900s, the French mathematician Jean-Baptiste Fourier showed that any composite signal is a sum of a set of sine waves of different frequencies, phases, and amplitudes. In other words, we can write a composite signal as

$$s(t) = A_1 \sin(2\pi f_1 t + \phi_1) + A_2 \sin(2\pi f_2 t + \phi_2) + A_3 \sin(2\pi f_3 t + \phi_3) + \cdots$$

According to Fourier analysis, any composite signal can be represented as a combination of simple sine waves with different frequencies, phases, and amplitudes.

For example, let us consider the square wave of Figure 3.8 with a peak amplitude of A and a frequency of f (period T). According to **Fourier analysis,** we can prove that this signal can be decomposed into a series of sine waves as shown below.

Figure 3.8 *Square wave*

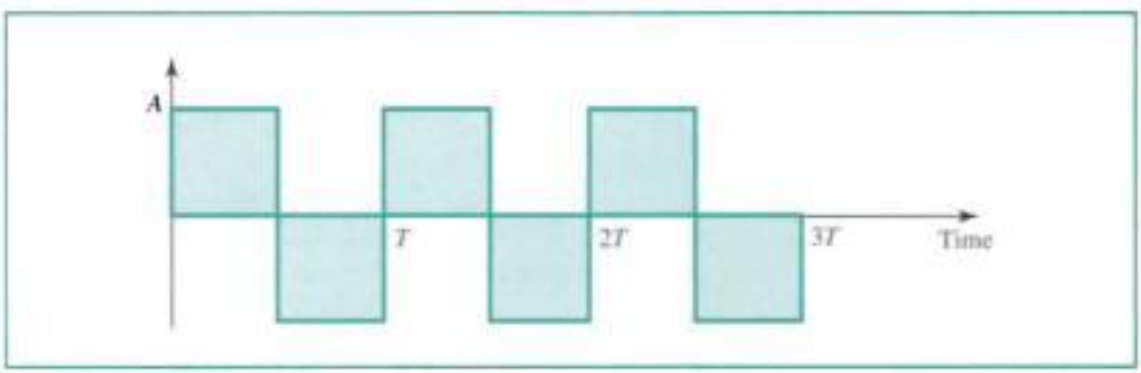

$$s(t) = \frac{4A}{\pi} \sin 2\pi f t + \frac{4A}{3\pi} \sin[2\pi(3f)t] + \frac{4A}{5\pi} \sin[2\pi(5f)t] + \cdots$$

In other words, we have a series of sine waves with frequencies f, $3f$, $5f$, $7f$, . . . and amplitudes $4A/\pi$, $4A/3\pi$, $4A/5\pi$, $4A/7\pi$, and so on. The term with frequency f is dominant and is called the **fundamental frequency.** The term with frequency $3f$ is called the third harmonic, the term with frequency $5f$ is the fifth harmonic, and so on. To

Copyrighted material

recreate the complete square wave signal requires all the odd harmonics up to infinity. For example, if the square wave has a frequency of 5000, the components have frequencies 5000, 15,000, 25,000, and so on. Figure 3.9 shows three of the harmonics.

Figure 3.9 *Three harmonics*

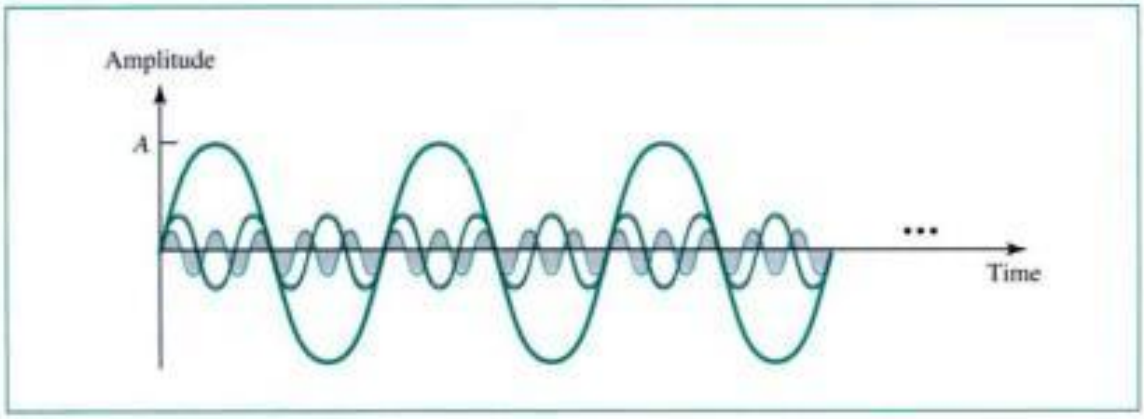

Of course, if we add these three harmonics, we do not get a square wave—we get something which is close, but not exact, as shown in Figure 3.10. If we need something closer to a square wave, we need to add more harmonics.

Figure 3.10 *Adding first three harmonics*

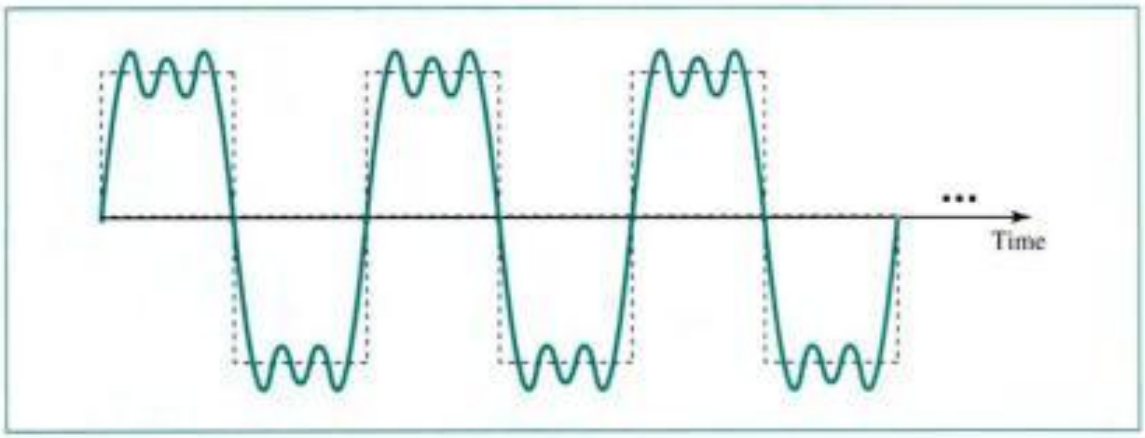

Frequency Spectrum

The description of a signal using the frequency domain and containing all its components is called the **frequency spectrum** of that signal. For example, Figure 3.11 shows the frequency spectrum of a square wave and the frequency spectrum of a signal which is very close to a square wave (only three harmonics).

Composite Signal and Transmission Medium

A signal needs to pass through a transmission medium (cable or air). However, each medium has its own characteristics. One of the characteristics of a medium is related to

Copyrighted material

Figure 3.11 *Frequency spectrum comparison*

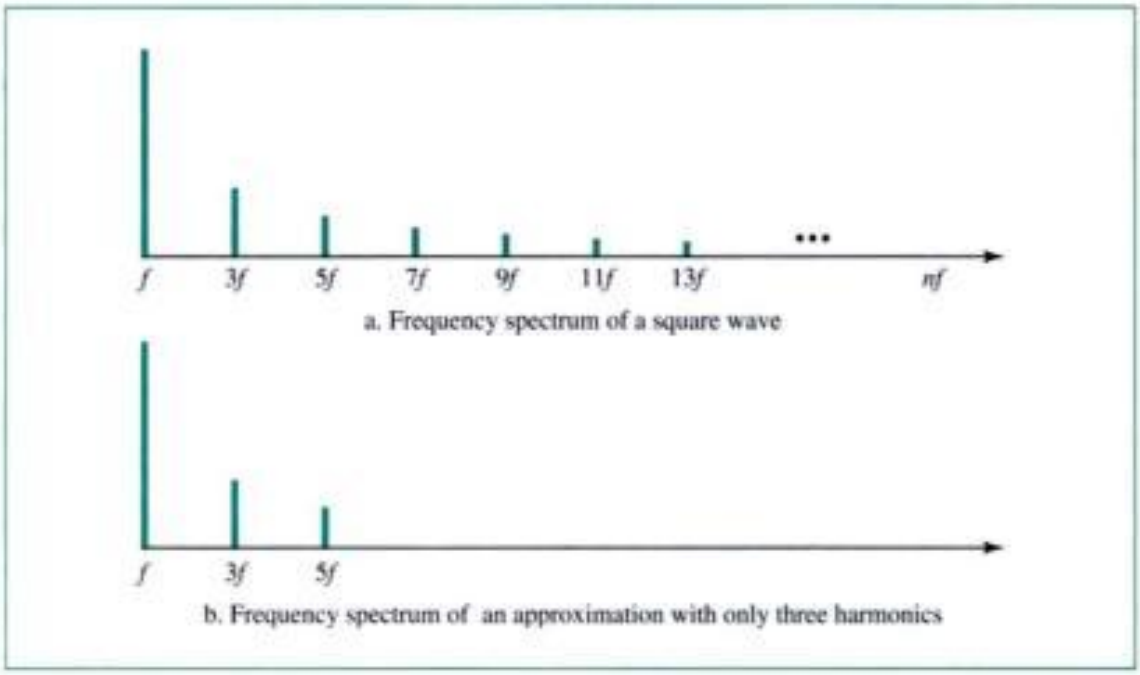

frequency. A medium may pass some frequencies and may block or weaken others. This means that when we send a composite signal, containing many frequencies, at one end of a transmission medium, we may not receive the same signal at the other end. To maintain the integrity of the signal, the medium needs to pass every frequency (and also preserve the amplitude and phase, as we shall see later).

What we must realize is that no transmission medium is perfect. Each medium passes some frequencies, weakens others, and blocks still others. This means that when we send our square wave signal through a medium, we get something at the other end which is not a square wave at all. Figure 3.12 shows the concept.

Figure 3.12 *Signal corruption*

Bandwidth

The range of frequencies that a medium can pass is called its **bandwidth.** Because no medium can pass or block all frequencies, the bandwidth normally refers to the range of frequencies that a medium can pass without losing one-half of the power contained in that signal. The bandwidth is a range and is normally referred to as the difference between two numbers. For example, if a medium can pass frequencies between 1000

Copyrighted material

and 5000 without losing most of the power contained in this range, its bandwidth is 5000 – 1000, or 4000.

The bandwidth is a property of a medium: It is the difference between the highest and the lowest frequencies that the medium can satisfactorily pass.

If the bandwidth of a medium does not match the spectrum of a signal, some of the frequencies are lost. For example, the square wave signal in Figure 3.8 has a spectrum that expands to infinity. No transmission medium has such a bandwidth. This means that passing a square wave through any medium will always deform the signal. As another example, voice normally has a spectrum of 300 to 3300 Hz (a bandwidth of 3000 Hz). If we use a transmission line with a bandwidth of 1000 (between 1500 and 2500 Hz), we lose some frequencies in our voice; it may not even be recognizable.

Sometimes people use the term *bandwidth* with regard to a signal. For example, they say, "This signal has a bandwidth of 1000 Hz." In this case, what they mean is that the signal has a spectrum with significant frequencies that span 1000 Hz. In other words, they mean, "We need a medium with a bandwidth of 1000 Hz if we want to send this signal without losing a significant part of it." We can say that today, people use the term *bandwidth* for media and signals interchangeably, but it was not always so.

In this book, we use the term *bandwidth* to refer to the property of a medium or the width of a single spectrum.

Figure 3.13 shows the concept of bandwidth. The figure depicts the range of frequencies a medium can pass and the relative amplitude of the frequencies passed. Note that the media may pass some frequencies above the 5000 and below 1000, but according to the criteria we mentioned before, the amplitudes of those frequencies are less than those in the middle.

Figure 3.13 *Bandwidth*

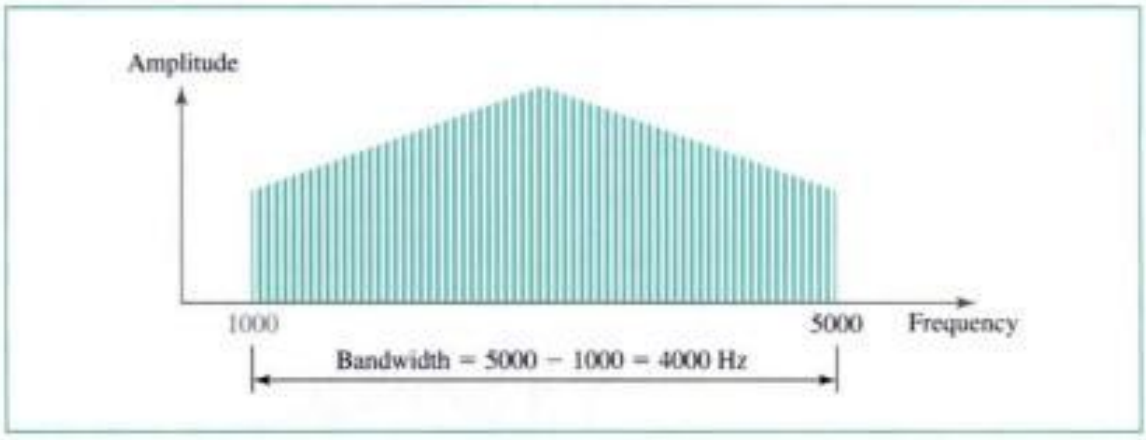

Copyrighted material

Example 3

If a periodic signal is decomposed into five sine waves with frequencies of 100, 300, 500, 700, and 900 Hz, what is the bandwidth? Draw the spectrum, assuming all components have a maximum amplitude of 10 V.

Solution

Let f_h be the highest frequency, f_l the lowest frequency, and B the bandwidth. Then

$$B = f_h - f_l = 900 - 100 = 800 \text{ Hz}$$

The spectrum has only five spikes, at 100, 300, 500, 700, and 900 (see Fig. 3.14).

Figure 3.14 *Example 3*

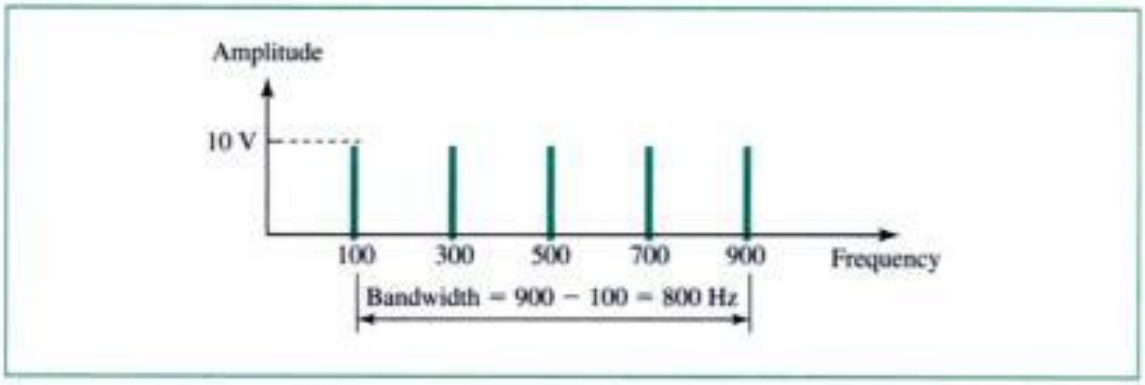

Example 4

A signal has a bandwidth of 20 Hz. The highest frequency is 60 Hz. What is the lowest frequency? Draw the spectrum if the signal contains all integral frequencies of the same amplitude.

Solution

Let f_h be the highest frequency, f_l the lowest frequency, and B the bandwidth. Then

$$B = f_h - f_l$$
$$20 = 60 - f_l$$
$$f_l = 60 - 20 = 40 \text{ Hz}$$

The spectrum contains all integral frequencies. We show this by a series of spikes (see Fig. 3.15).

Figure 3.15 *Example 4*

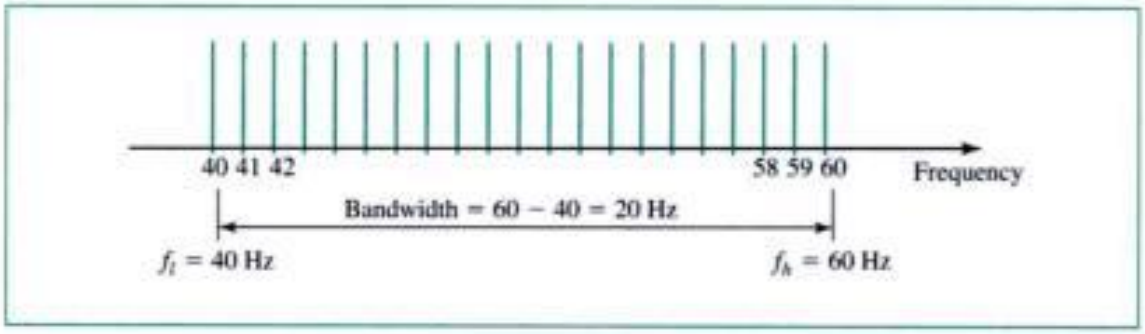

Copyrighted material

Example 5

A signal has a spectrum with frequencies between 1000 and 2000 Hz (bandwidth of 1000 Hz). A medium can pass frequencies from 3000 to 4000 Hz (a bandwidth of 1000 Hz). Can this signal faithfully pass through this medium?

Solution

The answer is definitely no. Although the signal can have the same bandwidth (1000 Hz), the range does not overlap. The medium can only pass the frequencies between 3000 and 4000 Hz; the signal is totally lost.

3.3 DIGITAL SIGNALS

In addition to being represented by an analog signal, data can be represented by a digital signal. For example, a 1 can be encoded as a positive voltage and a 0 as zero voltage (see Fig. 3.16).

Figure 3.16 *A digital signal*

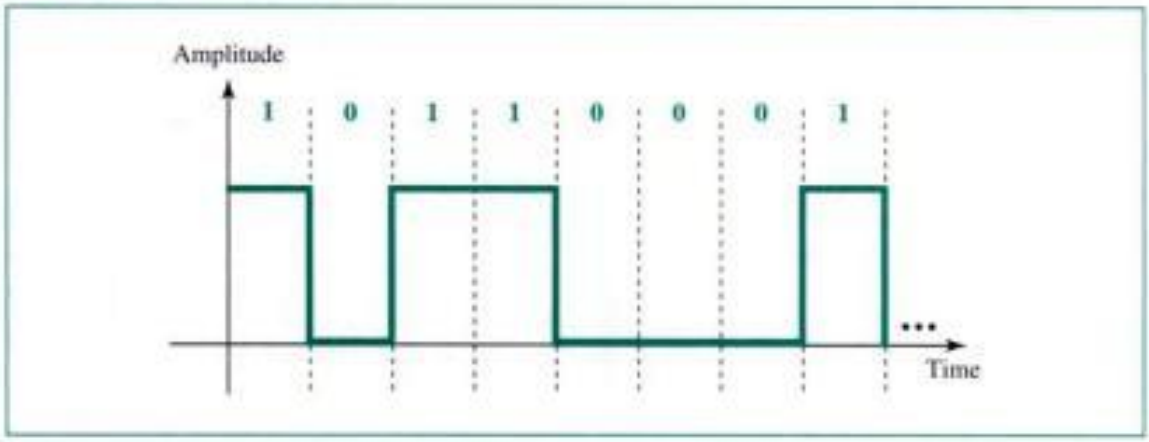

Bit Interval and Bit Rate

Most digital signals are aperiodic, and thus period or frequency is not appropriate. Two new terms—*bit interval* (instead of *period*) and *bit rate* (instead of *frequency*)—are used to describe digital signals. The **bit interval** is the time required to send one single bit. The **bit rate** is the number of bit intervals per second. This means that the bit rate is the number of bits sent in 1 s, usually expressed in **bits per second (bps).** See Figure 3.17.

Example 6

A digital signal has a bit rate of 2000 bps. What is the duration of each bit (bit interval)?

Solution

The bit interval is the inverse of the bit rate.

$$\text{Bit interval} = \frac{1}{\text{bit rate}} = \frac{1}{2000} = 0.000500 \text{ s} = 0.000500 \times 10^6 \ \mu\text{s} = 500 \ \mu\text{s}$$

Copyrighted material

Figure 3.17 *Bit rate and bit interval*

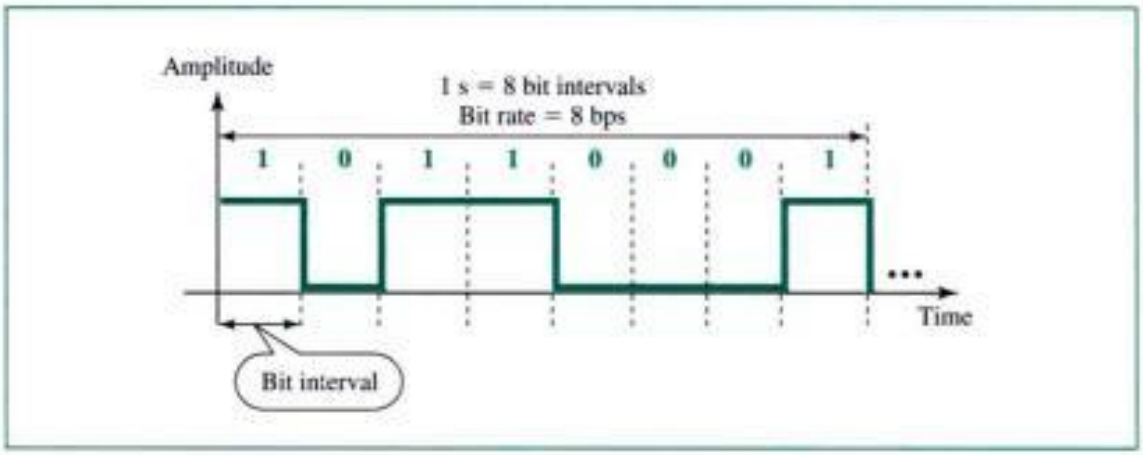

Digital Signal as a Composite Analog Signal

It should be clear so far that a digital signal, with all its sudden changes, is actually a composite signal having an infinite number of frequencies. In other words, the bandwidth of a digital signal is infinite.

A digital signal is a composite signal with an infinite bandwidth.

Digital Signal Through a Wide-Bandwidth Medium

If a medium has a wide bandwidth, we can send a digital signal through it. Of course, some of the frequencies are blocked by the medium, but still enough frequencies are passed to preserve a decent signal shape. We will see that we can use a dedicated medium such as a coaxial cable to send a digital signal through a local area network.

Digital Signal Through a Band-Limited Medium

Can we send digital data through a band-limited medium? The answer to this question is definitely yes. We send data by using band-limited telephone lines to the Internet every day. But what is the minimum required bandwidth B in hertz if we want to send n bps? In other words, what is the relationship between the number of bits per second and the required bandwidth? We will formally answer this question when we discuss the Nyquist theorem and the Shannon capacity. In this section, we take an intuitive approach to understand the foundation of data transmission.

Using Only One Harmonic

To simplify the discussion, imagine that our computer creates just 6 bps. We make this unrealistic assumption just to be able to show things graphically. Every second, 6 bits are produced by the computer. One second, we may have 111111, another second 001010, another second 101010, and so on. We use an encoding method that uses a positive value to represent 1 and a negative value to represent 0. Figure 3.18 shows two signals.

Copyrighted material

Figure 3.18 *Digital versus analog*

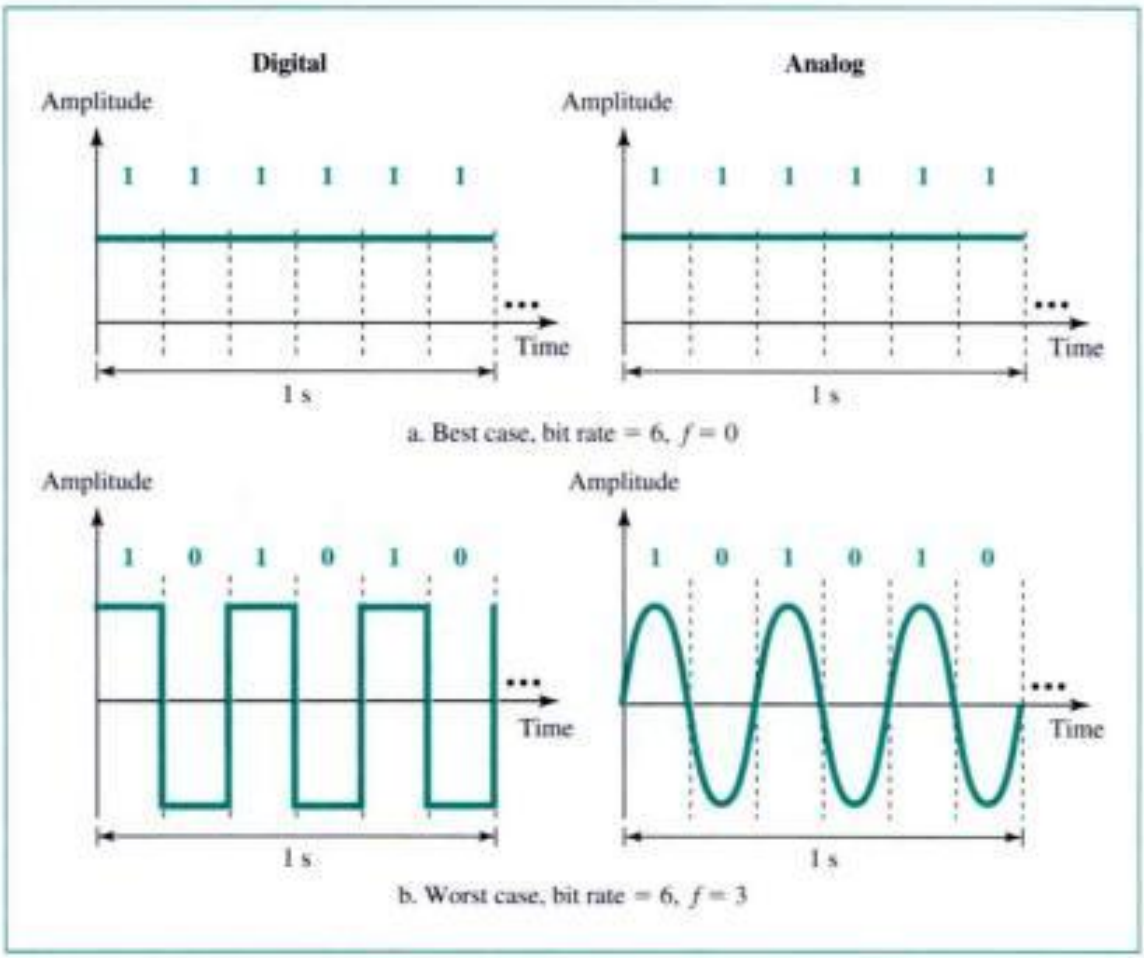

Let us see if we can simulate any of these patterns by using a single-frequency signal. The best case is 111111 or 000000. We can simulate this case by sending a signal of frequency zero. The worst case is definitely 101010 or 010101. These are the worst cases, because there are more changes in this pattern than in any other pattern; with each succeeding bit there is a change. More change means higher frequency. However, we can simulate this digital signal by using a single-frequency analog signal with a frequency of 3 Hz, one-half of the bit rate. So we have

Best case:	bit rate = 6	frequency = 0
Worst case:	bit rate = 6	frequency = 3

We can say that all other cases are between the best and the worst cases. We can simulate other cases with a single frequency of 1 or 2 Hz (using the appropriate phase).

In other words, if we need to simulate this digital signal of data rate 6 bps, sometimes we need to send a signal of frequency 0, sometimes 1, sometimes 2, and sometimes 3 Hz. We need our medium to be able to pass frequencies of 0 to 3 Hz. Our medium needs to have a bandwidth of 3 Hz (3 − 0).

If we generalize this simple example, we come to a very simple relationship between the bit rate and bandwidth. To send n bps through an analog channel using the

Copyrighted material

above approximation, we need a bandwidth B such that

$$B = \frac{n}{2}$$

Using More Harmonics

The above discussion was based on one harmonic. For each pattern we send a single-frequency signal using a frequency of 0 to 3 Hz. However, in many situations, a one-frequency signal is not very appropriate; the analog signal may look very different from the digital signal. The receiver may not recognize the signal correctly.

To improve the shape of the signal for better communication, particularly for high data rates, we need to add some harmonics. It is clear from our previous discussions that we need to add some odd harmonics. If we add the third harmonic to each case, we need $B = n/2 + 3n/2 = 4n/2$ Hz; if we add third and fifth harmonics, we need $B = n/2 + 3n/2 + 5n/2 = 9n/2$ Hz; and so on. In other words, we have

$$B >= \frac{n}{2} \qquad \text{or} \qquad n <= 2B$$

Table 3.2 shows how much bandwidth we need to send 1000 bps using this method.

Table 3.2 *Bandwidth requirements*

Bit Rate	*Harmonic 1*	*Harmonics 1, 3*	*Harmonics 1, 3, 5*	*Harmonics 1, 3, 5, 7*
n = 1 Kbps	B = 500 Hz	B = 2 KHz	B = 4.5 KHz	B = 8 KHz
n = 10 Kbps	B = 5 KHz	B = 20 KHz	B = 45 KHz	B = 80 KHz
n = 100 Kbps	B = 50 KHz	B = 200 KHz	B = 450 KHz	B = 800 KHz

We want to emphasize the following: In this method as well as others, the required bandwidth is proportional to the bit rate. If we double the bit rate, we need to double the bandwidth.

The bit rate and the bandwidth are proportional to each other.

Digital versus Analog Bandwidth

The above discussion on the proportionality of bandwidth and bit rate leads to the idea of digital bandwidth. If we are sending analog data through a medium, we are concerned with analog bandwidth (expressed in hertz); if we are sending digital data through a medium, we are concerned with digital bandwidth (in bits per second). Analog bandwidth is the range of frequencies that a medium can pass. Digital bandwidth is the maximum bit rate that a medium can pass. They represent the same property of a medium, but in different scales and units.

The analog bandwidth of a medium is expressed in hertz; the digital bandwidth, in bits per second.

Copyrighted material

Higher Bit Rate

Some readers may be puzzled by the above discussion, especially if they consider data transmission over telephone lines. Telephone lines have a bandwidth of 3 to 4 KHz for the regular user; we know that sometimes we send more than 30,000 bps using a traditional modem. According to the above discussion, we should not be able to send more than 8000 bps. How can this be reconciled? It's so because we are using a modem with modulation techniques that allow the representation of multiple bits in one single period of an analog signal. We discuss these techniques in Chapter 5.

3.4 ANALOG VERSUS DIGITAL

Finally we come to this question: Should we use analog or digital signals? It really depends on the situation and on the available bandwidth.

Low-pass versus Band-pass

A channel or a link is either low-pass or band-pass. A **low-pass channel** has a bandwidth with frequencies between 0 and f. The lower limit is 0, the upper limit can be any frequency (including infinity). On the other hand, a **band-pass channel** has a bandwidth with frequencies between f_1 and f_2. Figure 3.19 shows the bandwidth of a low-pass channel and a band-pass channel.

Figure 3.19 *Low-pass and band-pass*

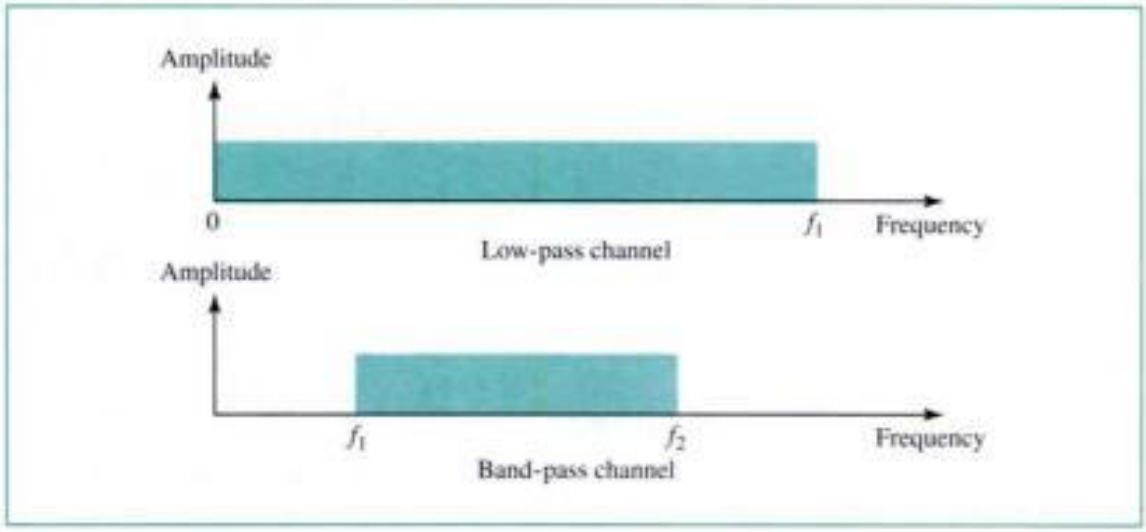

Digital Transmission

A digital signal theoretically needs a bandwidth between 0 and infinity. The lower limit (0) is fixed; the upper limit (infinity) can be relaxed if we lower our standards by accepting a limited number of harmonics. This means a bandwidth between 0 and f for a low-pass signal.

Copyrighted material

We have a low-pass channel only if the medium is dedicated to two devices (point-to-point) or shared between several devices in time (not in frequency). For example, in a wired local area network, a cable can be shared between stations. We can transmit data digitally in this system.

Digital transmission needs a low-pass channel.

Analog Transmission

An analog signal normally has a narrower bandwidth than a digital signal with frequencies between f_1 and f_2. In other words, an analog signal requires a band-pass channel. In addition, the bandwidth of an analog signal can always be shifted. For example, we can always shift a signal with a bandwidth from f_1 to f_2 to a signal with a bandwidth from f_3 to f_4 as long as the width of the bandwidth remains the same.

A band-pass channel is more available than a low-pass channel. The bandwidth of a medium can be divided into several band-pass channels to carry several analog transmissions. For example, in analog cellular telephony, a limited bandwidth is divided between many telephone users. Each user has a bandwidth between 0 to 30 KHz, with each signal shifted appropriately.

Analog transmission can use a band-pass channel.

This is not to say that an analog transmission cannot use a low-pass channel; it just means that it can use the more available band-pass channel. A low-pass channel is a special case of a band-pass channel with $f_1 = 0$.

3.5 DATA RATE LIMITS

A very important question is how fast we can send data, in bits per second, over a channel. Data rate depends on three factors:

1. The bandwidth available
2. The levels of signals we can use
3. The quality of the channel (the level of the noise).

Two theoretical formulas were developed to calculate the data rate: one by Nyquist for a noiseless channel, another by Shannon for a noisy channel.

Noiseless Channel: Nyquist Bit Rate

For a noiseless channel, the **Nyquist bit rate** formula defines the theoretical maximum bit rate

$$\text{BitRate} = 2 \times \text{Bandwidth} \times \log_2 L$$

In this formula, Bandwidth is the bandwidth of the channel, L is the number of signal levels used to represent data, and BitRate is the bit rate in bits per second.

Copyrighted material

Example 7

Consider a noiseless channel with a bandwidth of 3000 Hz transmitting a signal with two signal levels. The maximum bit rate can be calculated as:

$$\text{BitRate} = 2 \times 3000 \times \log_2 2 = 6000 \text{ bps}$$

Example 8

Consider the same noiseless channel, transmitting a signal with four signal levels (for each level, we send two bits). The maximum bit rate can be calculated as:

$$\text{BitRate} = 2 \times 3000 \times \log_2 4 = 12{,}000 \text{ bps}$$

Noisy Channel: Shannon Capacity

In reality, we cannot have a noiseless channel; the channel is always noisy. In 1944, Claude Shannon introduced a formula, called the **Shannon capacity,** to determine the theoretical highest data rate for a noisy channel:

$$\text{Capacity} = \text{Bandwidth} \times \log_2 (1 + \text{SNR})$$

In this formula, Bandwidth is the bandwidth of the channel, SNR is the **signal-to-noise ratio,** and Capacity is the capacity of the channel in bits per second. The signal-to-noise ratio is the statistical ratio of the power of the signal to the power of the noise. Note that in the Shannon formula there is no indication of the signal level, which means that no matter how many levels we use, we cannot achieve a data rate higher than the capacity of the channel. In other words, the formula defines a characteristic of the channel, not the method of transmission.

Example 9

Consider an extremely noisy channel in which the value of the signal-to-noise ratio is almost zero. In other words, the noise is so strong that the signal is faint. For this channel the capacity is calculated as

$$C = B \log_2 (1 + \text{SNR}) = B \log_2 (1 + 0) = B \log_2 (1) = B \times 0 = 0$$

This means that the capacity of this channel is zero regardless of the bandwidth. In other words, we cannot receive any data through this channel.

Example 10

We can calculate the theoretical highest bit rate of a regular telephone line. A telephone line normally has a bandwidth of 3000 Hz (300 Hz to 3300 Hz). The signal-to-noise ratio is usually 3162. For this channel the capacity is calculated as

$$C = B \log_2 (1 + \text{SNR}) = 3000 \log_2 (1 + 3162) = 3000 \log_2 (3163)$$
$$C = 3000 \times 11.62 = 34{,}860 \text{ bps}$$

Copyrighted material

This means that the highest bit rate for a telephone line is 34,860 Kbps. If we want to send data faster than this, we can either increase the bandwidth of the line or improve the signal-to-noise ratio.

Using Both Limits

In practice, we need to use both methods to find what bandwidth of what signal level we need. Let us show this by an example.

Example 11

We have a channel with a 1 MHz bandwidth. The SNR for this channel is 63; what is the appropriate bit rate and signal level?

Solution

First, we use the Shannon formula to find our upper limit.

$$C = B \log_2 (1 + SNR) = 10^6 \log_2 (1 + 63) = 10^6 \log_2 (64) = 6 \text{ Mbps}$$

Although the Shannon formula gives us 6 Mbps, this is the upper limit. For better performance we choose something lower, for example 4 Mbps. Then we use the Nyquist formula to find the number of signal levels.

$$4 \text{ Mbps} = 2 \times 1 \text{ MHz} \times \log_2 L \longrightarrow L = 4$$

3.6 TRANSMISSION IMPAIRMENT

Signals travel through transmission media, which are not perfect. The imperfections cause impairment in the signal. This means that the signal at the beginning and end of the medium are not the same. What is sent is not what is received. Three types of impairment usually occur: attenuation, distortion, and noise (see Fig. 3.20).

Figure 3.20 *Impairment types*

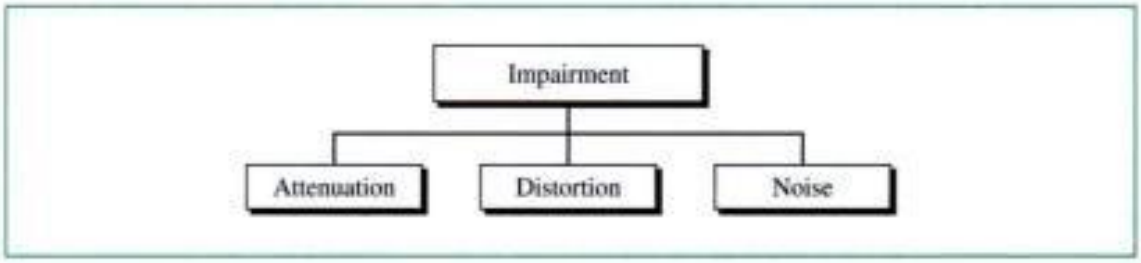

Attenuation

Attenuation means loss of energy. When a signal, simple or composite, travels through a medium, it loses some of its energy so that it can overcome the resistance of the medium. That is why a wire carrying electrical signals gets warm, if not hot, after a while. Some of the electrical energy in the signal is converted to heat. To compensate

Copyrighted material

for this loss, amplifiers are used to amplify the signal. Figure 3.21 shows the effect of attenuation and amplification.

Figure 3.21 *Attenuation*

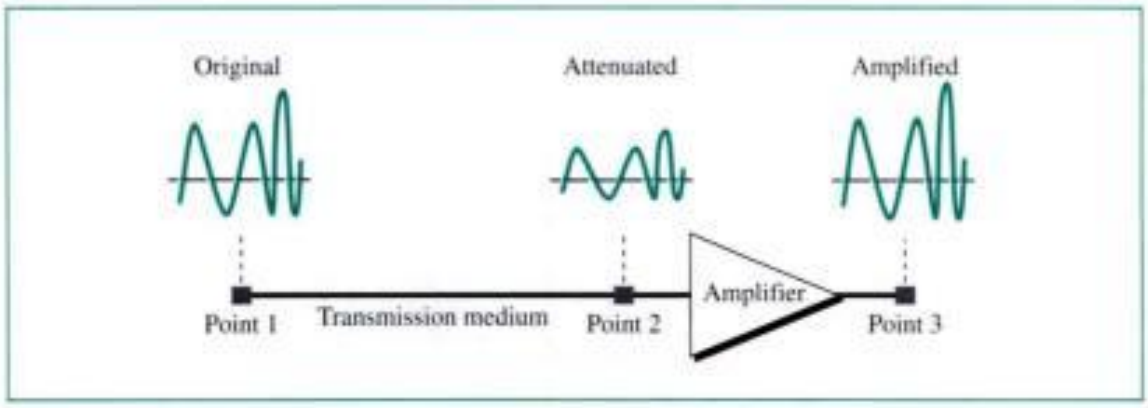

Decibel

To show that a signal has lost or gained strength, engineers use the concept of the decibel. The **decibel (dB)** measures the relative strengths of two signals or a signal at two different points. Note that the decibel is negative if a signal is attenuated and positive if a signal is amplified.

$$\text{dB} = 10 \log_{10} (P_2 / P_1)$$

where P_1 and P_2 are the powers of a signal at points 1 and 2, respectively.

Example 12

Imagine a signal travels through a transmission medium and its power is reduced to half. This means that $P_2 = 1/2\ P_1$. In this case, the attenuation (loss of power) can be calculated as

$$10 \log_{10} (P_2/P_1) = 10 \log_{10} (0.5P_1/P_1) = 10 \log_{10} (0.5) = 10(-0.3) = -3 \text{ dB}$$

Engineers know that –3 dB or a loss of 3 dB is equivalent to losing half the power.

Example 13

Imagine a signal travels through an amplifier and its power is increased ten times. This means that $P_2 = 10 \times P_1$. In this case, the amplification (gain of power) can be calculated as

$$10 \log_{10} (P_2/P_1) = 10 \log_{10} (10P_1/P_1) = 10 \log_{10} (10) = 10\ (1) = 10 \text{ dB}$$

Example 14

One reason that engineers use the decibel to measure the changes in the strength of a signal is that decibel numbers can be added (or subtracted) when we are talking about several points instead of just two (cascading). In Figure 3.22 a signal travels a long distance from point 1 to point 4. The signal is attenuated by the time it reaches point 2. Between points 2 and 3, the signal is amplified.

Copyrighted material

Again, between points 3 and 4, the signal is attenuated. We can find the resultant decibel for the signal just by adding the decibel measurements between each set of points.

Figure 3.22 *Example 14*

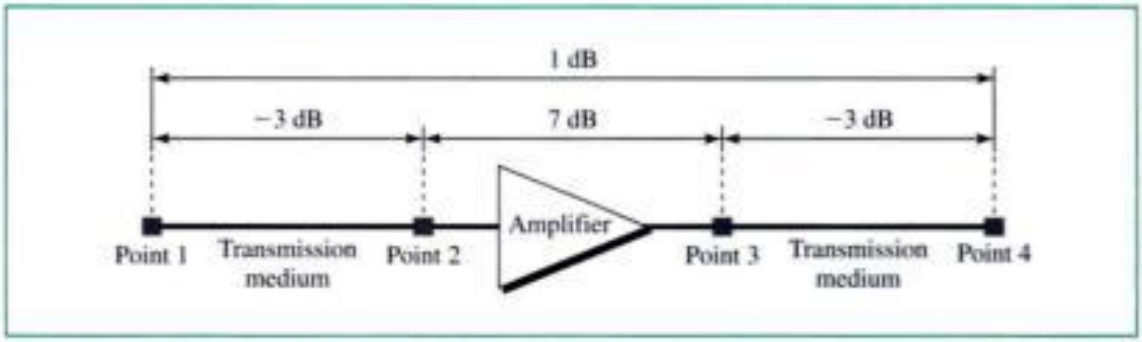

In this case, the decibel can be calculated as

$$\mathbf{dB = -3 + 7 - 3 = +1}$$

which means that the signal has gained power.

Distortion

Distortion means that the signal changes its form or shape. Distortion occurs in a composite signal, made of different frequencies. Each signal component has its own propagation speed (see the next section) through a medium and, therefore, its own delay in arriving at the final destination. Figure 3.23 shows the effect of distortion on a composite signal.

Figure 3.23 *Distortion*

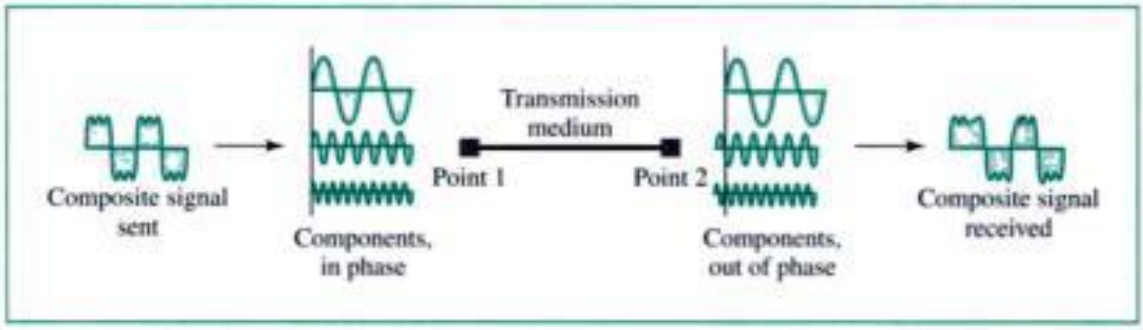

Noise

Noise is another problem. Several types of noise such as thermal noise, induced noise, crosstalk, and impulse noise may corrupt the signal. Thermal noise is the random motion of electrons in a wire which creates an extra signal not originally sent by the transmitter. Induced noise comes from sources such as motors and appliances. These devices act as a sending antenna and the transmission medium acts as the receiving antenna. Crosstalk is the effect of one wire on the other. One wire acts as a sending antenna and the other as the receiving antenna. Impulse noise is a spike (a signal with high energy in

Copyrighted material

a very short period of time) that comes from power lines, lightning, and so on. Figure 3.24 shows the effect of noise on a signal.

Figure 3.24 *Noise*

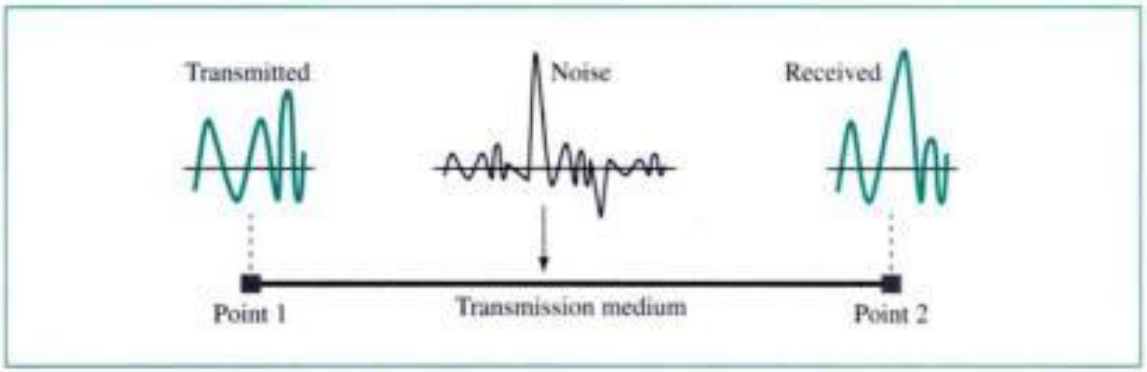

3.7 MORE ABOUT SIGNALS

Four other measurements used in data communications are throughput, propagation speed, propagation time, and wavelength. We discuss these in this section before closing the chapter.

Throughput

The **throughput** is the measurement of how fast data can pass through an entity (such as a point or a network). In other words, if we consider this entity as a wall through which bits pass, throughput is the number of bits that can pass this wall in one second. Figure 3.25 shows the concept.

Figure 3.25 *Throughput*

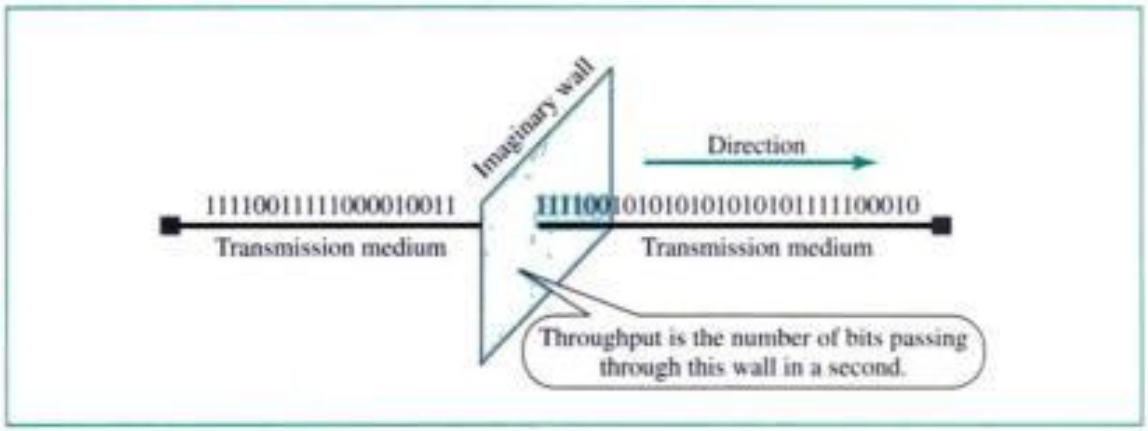

Propagation Speed

Propagation speed measures the distance a signal or a bit can travel through a medium in one second. The propagation speed of electromagnetic signals depends on the

Copyrighted material

medium and on the frequency of the signal. For example, in a vacuum, light is propagated with a speed of 3×10^8 m/s. It is lower in air. It is much lower in a cable.

Propagation Time

Propagation time measures the time required for a signal (or a bit) to travel from one point of the transmission medium to another. The propagation time is calculated by dividing the distance by the propagation speed. Figure 3.26 shows the concept.

Propagation time = Distance/Propagation speed

Figure 3.26 *Propagation time*

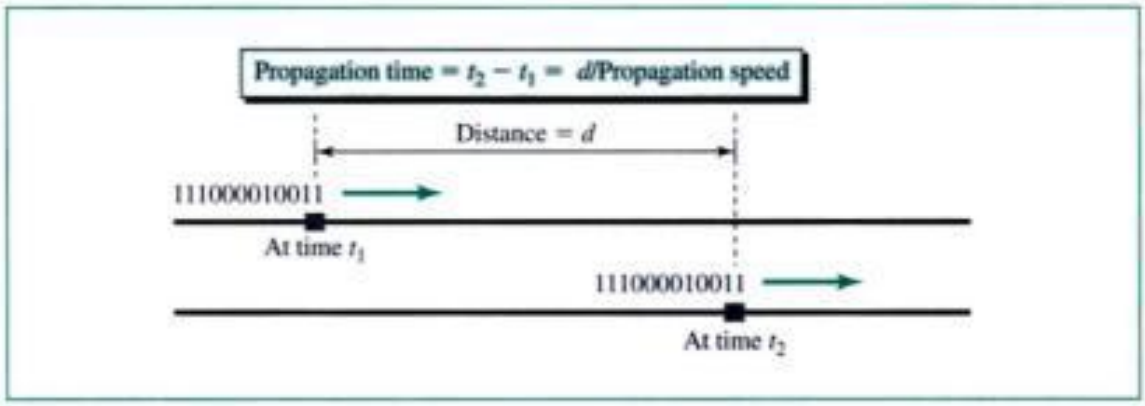

Wavelength

Wavelength is another characteristic of a signal traveling through a transmission medium. Wavelength binds the period or the frequency of a simple sine wave to the propagation speed of the medium. In other words, while the frequency of a signal is independent of the medium, the wavelength depends on both the frequency and the medium. Although wavelength can be associated with electrical signals, it is customary to use wavelengths when talking about the transmission of light in an optical fiber. The wavelength is the distance a simple signal can travel in one period (see Fig. 3.27).

Figure 3.27 *Wavelength*

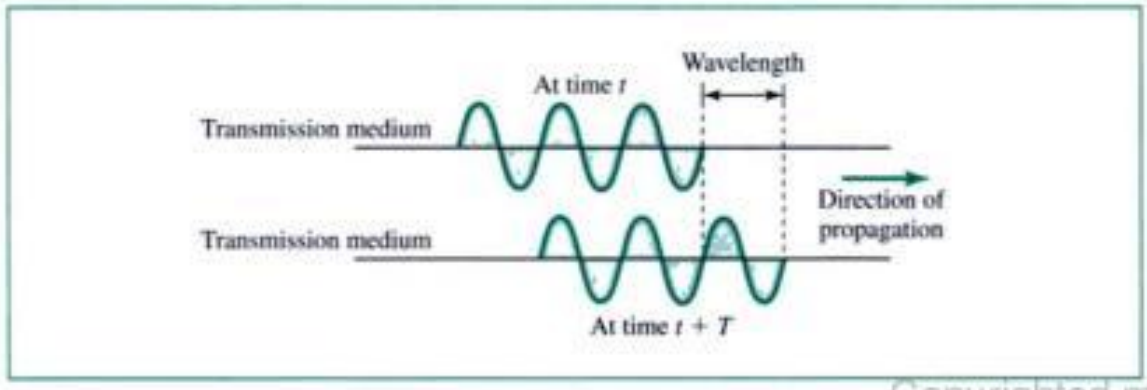

Copyrighted material

Wavelength can be calculated given the propagation speed and the period of the signal

$$\text{Wavelength} = \text{Propagation speed} \times \text{Period}$$

However, since period and frequency are related to each other, we can also say

$$\text{Wavelength} = \text{Propagation speed} \times (1/\text{Frequency}) = \text{Propagation speed}/\text{Frequency}$$

If we represent wavelength by λ, propagation speed by c (speed of light), and frequency by f, we get

$$\lambda = c/f$$

The wavelength is normally measured in micrometers (microns) instead of meters. For example, the wavelength of red light (frequency $= 4 \times 10^{14}$) in air is

$$\lambda = c/f = (3 \times 10^8)/(4 \times 10^{14}) = 0.75 \times 10^{-6}\ \text{m} = 0.75\ \mu\text{m}$$

In a coaxial or fiber-optic cable, however, the wavelength is lower (0.5 μm) because the propagation speed in the cable is less than in the air.

3.8 KEY TERMS

analog data
analog signal
aperiodic signal
attenuation
band-pass channel
bandwidth
bit interval
bit rate
bits per second (bps)
composite signal
cycle
decibel (dB)
digital
digital data
digital signal
distortion
Fourier analysis
frequency
frequency-domain plot
frequency spectrum
fundamental frequency
harmonics
hertz (Hz)
low-pass channel
noise
Nyquist bit rate
peak amplitude
period
periodic signal
phase
propagation speed
propagation time
Shannon capacity
signal
signal-to-noise ratio (SNR)
sine wave
throughput
time-domain plot
wavelength

Copyrighted material

3.9 SUMMARY

- Data must be transformed into electromagnetic signals prior to transmission across a network.
- Data and signals can be either analog or digital.
- A signal is periodic if it consists of a continuously repeating pattern.
- Each sine wave can be characterized by its amplitude, frequency, and phase.
- Frequency and period are inverses of each other.
- A time-domain graph plots amplitude as a function of time.
- A frequency-domain graph plots each sine wave's peak amplitude against its frequency.
- By using Fourier analysis, any composite signal can be represented as a combination of simple sine waves.
- The spectrum of a signal consists of the sine waves that make up the signal.
- The bandwidth of a signal is the range of frequencies the signal occupies. Bandwidth is determined by finding the difference between the highest and lowest frequency components.
- Bit rate (number of bits per second) and bit interval (duration of 1 bit) are terms used to describe digital signals.
- A digital signal is a composite signal with an infinite bandwidth.
- Bit rate and bandwidth are proportional to each other.
- The Nyquist formula determines the theoretical data rate for a noiseless channel.
- The Shannon capacity determines the theoretical maximum data rate for a noisy channel.
- Attenuation, distortion, and noise can impair a signal.
- Attenuation is the loss of a signal's energy due to the resistance of the medium.
- The decibel measures the relative strength of two signals or a signal at two different points.
- Distortion is the alteration of a signal due to the differing propagation speeds of each of the frequencies that make up a signal.
- Noise is the external energy that corrupts a signal.
- We can evaluate transmission media by throughput, propagation speed, and propagation time.
- The wavelength of a frequency is defined as the propagation speed divided by the frequency.

3.10 PRACTICE SET

Review Questions

1. Describe the three characteristics of a sine wave.
2. What is the spectrum of a signal?
3. Contrast an analog signal with a digital signal.

Copyrighted material

4. A signal has been received that only has values of –1, 0, and 1. Is this an analog or a digital signal?
5. What is the relationship between period and frequency?
6. What are the units of period and frequency?
7. What does the amplitude of a signal measure?
8. What does the frequency of a signal measure?
9. What does the phase of a signal measure?
10. Which type of plot shows the amplitude of a signal at a given time?
11. How can a composite signal be decomposed into its individual frequencies?
12. What is a bit interval, and what is its counterpart in an analog signal?
13. What is bit rate, and what is its counterpart in an analog signal?
14. Name three types of transmission impairment.
15. What does a decibel measure?
16. What is the relationship between propagation speed and propagation time?
17. What is the wavelength of a signal and how is it calculated?
18. What does the Shannon capacity have to do with communications?

Multiple-Choice Questions

19. Before data can be transmitted, they must be transformed to _____.
    a. Periodic signals
    b. Electromagnetic signals
    c. Aperiodic signals
    d. Low-frequency sine waves
20. A periodic signal completes one cycle in 0.001 s. What is the frequency?
    a. 1 Hz
    b. 100 Hz
    c. 1 KHz
    d. 1 MHz
21. Which of the following can be determined from a frequency-domain graph of a signal?
    a. Frequency
    b. Phase
    c. Power
    d. All the above
22. Which of the following can be determined from a frequency-domain graph of a signal?
    a. Bandwidth
    b. Phase
    c. Power
    d. All the above

Copyrighted material

23. In a frequency-domain plot, the vertical axis measures the _____.
    a. Peak amplitude
    b. Frequency
    c. Phase
    d. Slope
24. In a frequency-domain plot, the horizontal axis measures the _____.
    a. Peak amplitude
    b. Frequency
    c. Phase
    d. Slope
25. In a time-domain plot, the vertical axis is a measure of _____.
    a. Amplitude
    b. Frequency
    c. Phase
    d. Time
26. In a time-domain plot, the horizontal axis is a measure of _____.
    a. Signal amplitude
    b. Frequency
    c. Phase
    d. Time
27. If the bandwidth of a signal is 5 KHz and the lowest frequency is 52 KHz, what is the highest frequency?
    a. 5 KHz
    b. 10 KHz
    c. 47 KHz
    d. 57 KHz
28. What is the bandwidth of a signal that ranges from 40 KHz to 4 MHz?
    a. 36 MHz
    b. 360 KHz
    c. 3.96 MHz
    d. 396 KHz
29. When one of the components of a signal has a frequency of zero, the average amplitude of the signal _____.
    a. Is greater than zero
    b. Is less than zero
    c. Is zero
    d. (a) or (b)
30. A periodic signal can always be decomposed into _____.
    a. Exactly an odd number of sine waves
    b. A set of sine waves

Copyrighted material

c. A set of sine waves, one of which must have a phase of 0°
d. None of the above

31. As frequency increases, the period _____.
a. Decreases
b. Increases
c. Remains the same
d. Doubles

32. Given two sine waves A and B, if the frequency of A is twice that of B, t period of B is _____ that of A.
a. One-half
b. Twice
c. The same as
d. Indeterminate from

33. A sine wave is _____.
a. Periodic and continuous
b. Aperiodic and continuous
c. Periodic and discrete
d. Aperiodic and discrete

34. If the maximum amplitude of a sine wave is 2 V, the minimum ampl _____ V.
a. 2
b. 1
c. –2
d. Between –2 and 2

35. A signal is measured at two different points. The power is P_1 at the first p P_2 at the second point. The dB is 0. This means _____.
a. P_2 is zero
b. P_2 equals P_1
c. P_2 is much larger than P_1
d. P_2 is much smaller than P_1

36. _____ is a type of transmission impairment in which the signal loses due to the resistance of the transmission medium.
a. Attenuation
b. Distortion
c. Noise
d. Decibel

37. _____ is a type of transmission impairment in which the signal loses due to the different propagation speeds of each frequency that makes up th
a. Attenuation
b. Distortion

Copyrighted material

c. Noise
d. Decibel

38. _____ is a type of transmission impairment in which an outside source such as crosstalk corrupts a signal.
    a. Attenuation
    b. Distortion
    c. Noise
    d. Decibel
39. The _____ has units of meters/second or kilometers/second.
    a. Throughput
    b. Propagation speed
    c. Propagation time
    d. (b) or (c)
40. _____ has units of bits/second.
    a. Throughput
    b. Propagation speed
    c. Propagation time
    d. (b) or (c)
41. The _____ has units of seconds.
    a. Throughput
    b. Propagation speed
    c. Propagation time
    d. (b) or (c)
42. When propagation speed is multiplied by propagation time, we get the _____.
    a. Throughput
    b. Wavelength of the signal
    c. Distortion factor
    d. Distance a signal or bit has traveled
43. Propagation time is _____ proportional to distance and _____ proportional to propagation speed.
    a. Inversely; directly
    b. Directly; inversely
    c. Inversely; inversely
    d. Directly; directly
44. Wavelength is _____ proportional to propagation speed and _____ proportional to period.
    a. Inversely; directly
    b. Directly; inversely
    c. Inversely; inversely
    d. Directly; directly

Copyrighted material

45. The wavelength of a signal depends on the _____.
    a. Frequencies of the signal
    b. Medium
    c. Phase of the signal
    d. (a) and (b)
46. The wavelength of green light in air is _____ the wavelength of green light in fiber-optic cable.
    a. Less than
    b. Greater than
    c. Equal to
    d. None of the above
47. Using the Shannon formula to calculate the data rate for a given channel, if $C = B$, then _____.
    a. The signal is less than the noise
    b. The signal is greater than the noise
    c. The signal is equal to the noise
    d. Not enough information is given to answer the question

Exercises

48. Given the frequencies listed below, calculate the corresponding periods. Express the result in seconds, milliseconds, microseconds, nanoseconds, and picoseconds.
    a. 24 Hz
    b. 8 MHz
    c. 140 KHz
    d. 12 THz
49. Given the following periods, calculate the corresponding frequencies. Express the frequencies in hertz, kilohertz, megahertz, gigahertz, and terahertz.
    a. 5 s
    b. 12 μs
    c. 220 ns
    d. 81 ps
50. What is the phase shift for the following?
    a. A sine wave with the maximum amplitude at time zero
    b. A sine wave with maximum amplitude after 1/4 cycle
    c. A sine wave with zero amplitude after 3/4 cycle and increasing
    d. A sine wave with minimum amplitude after 1/4 cycle
51. Show the phase shift in degrees corresponding to each of the following delays in cycles.
    a. 1 cycle
    b. 1/2 cycle

Copyrighted material

c. 3/4 cycle

d. 1/3 cycle

52. Show the delay in cycles corresponding to each of the following.

a. 45°

b. 90°

c. 60°

d. 360°

53. Draw the time-domain plot of a sine wave (for only 1 s) with a maximum amplitude of 15 V, a frequency of 5, and a phase of 270°.

54. Draw two sine waves on the same time-domain plot. The characteristics of each signal are as follows:

signal *A*: amplitude 40, frequency 9, phase 0;

signal *B*: amplitude 10, frequency 9, phase 90.

55. Draw two periods of a sine wave with a phase shift of 90°. On the same diagram, draw a sine wave with the same amplitude and frequency but with a 90° phase shift from the first.

56. What is the bandwidth of a signal that can be decomposed into four sine waves with frequencies at 0, 20, 50, and 200 Hz? All maximum amplitudes are the same. Draw the frequency spectrum.

57. A periodic composite signal with a bandwidth of 2000 Hz is composed of two sine waves. The first one has a frequency of 100 Hz with a maximum amplitude of 20 V; the second one has a maximum amplitude of 5 V. Draw the frequency spectrum.

58. Show how a sine wave can change its phase by drawing two periods of an arbitrary sine wave with phase shift of 0° followed by the two periods of the *same signal* with a phase shift of 90°.

59. Imagine we have a sine wave called *A*. Show the negative of *A*. In other words, show the signal –*A*. Can we relate the negation of a signal to the phase shift? How many degrees?

60. Which signal has a higher bandwidth, a signal that changes 100 times per second or a signal that changes 200 times per second?

61. What is the bit rate for each of the following signals?

a. A signal in which 1 bit lasts 0.001 s

b. A signal in which 1 bit lasts 2 ms

c. A signal in which 10 bits last 20 μs

d. A signal in which 1000 bits last 250 ps

62. What is the duration of 1 bit for each of the following signals?

a. A signal with a bit rate of 100 bps

b. A signal with a bit rate of 200 Kbps

c. A signal with a bit rate of 5 Mbps

d. A signal with a bit rate of 1 Gbps

Copyrighted material

63. A device is sending out data at the rate of 1000 bps.
    a. How long does it take to send out 10 bits?
    b. How long does it take to send out a single character (8 bits)?
    c. How long does it take to send a file of 100,000 characters?
64. What is the bit rate for the signal in Figure 3.28?

Figure 3.28 *Exercise 64*

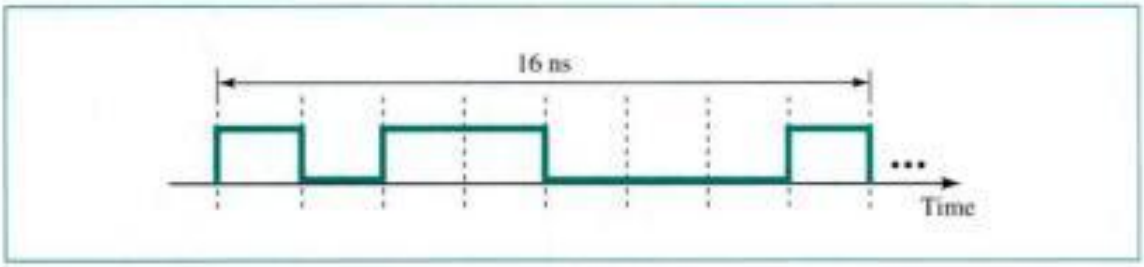

65. What is the frequency of the signal in Figure 3.29?

Figure 3.29 *Exercise 65*

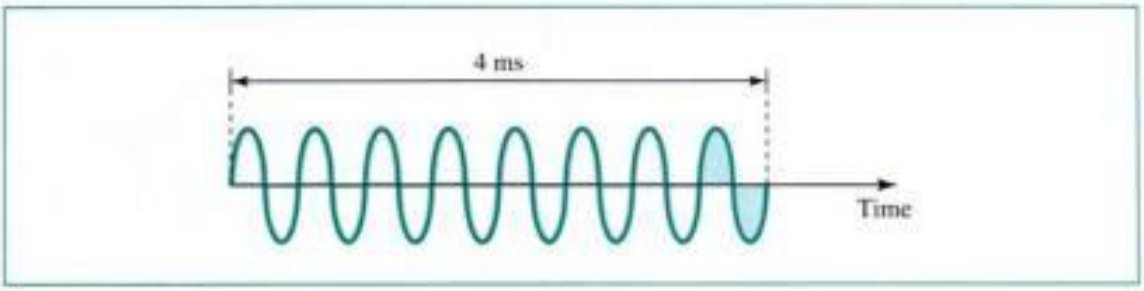

66. Draw the time-domain representation (for the first 1/100 s) of the signal shown in Figure 3.30.

Figure 3.30 *Exercise 66*

67. Draw the frequency-domain representation of the signal shown in Figure 3.31.
68. What is the bandwidth of the composite signal shown in Figure 3.32?
69. What is the bandwidth of the signal shown in Figure 3.33?
70. A composite signal contains frequencies from 10 to 30 KHz, each with an amplitude of 10 V. Draw the frequency spectrum.
71. A composite signal contains frequencies from 10 to 30 KHz. The amplitude is zero for the lowest and the highest signals and is 30 V for the 20-KHz signal. Assuming

Copyrighted material

Figure 3.31 *Exercise 67*

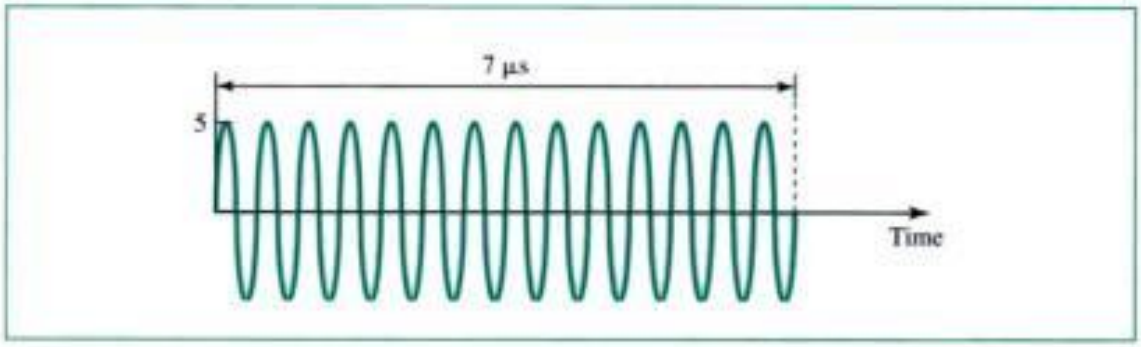

Figure 3.32 *Exercise 68*

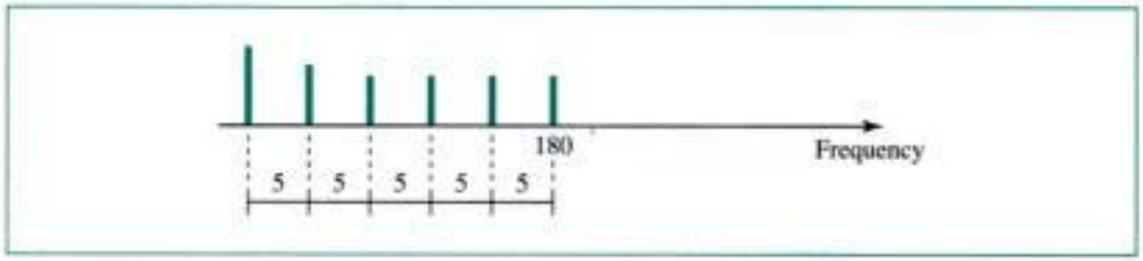

Figure 3.33 *Exercise 69*

that the amplitudes change gradually from the minimum to the maximum, draw the frequency spectrum.

72. Two signals have the same frequencies. However, whenever the first signal is at its maximum amplitude, the second signal has an amplitude of zero. What is the phase shift between the two signals?

73. What is the mathematical representation of a signal with an amplitude of 10 V, a frequency of 2500 Hz, a phase of 30°?

74. Show the frequency domain of the following signal:

$$s(t) = 8 + 3 \sin 100\pi t + 5 \sin 200\pi t$$

75. What is the period of the following signal?

$$s(t) = 4 \sin 628t$$

76. A cosine wave is a sine wave with a 90° phase shift. Show the equivalent of the following signal in sine format.

$$s(t) = \cos (2\pi ft + \pi)$$

Copyrighted material

77. A TV channel has a bandwidth of 6 MHz. If we send a digital signal using one channel, what are the data rates if we use one harmonic, three harmonics, and five harmonics?
78. A signal travels from point A to point B. At point A, the signal power is 100 W. At point B, the power is 90 W. What is the attenuation in decibel?
79. The attenuation of a signal is –10 dB. What is the final signal power if it was originally 5 W?
80. A signal has passed through three cascaded amplifiers, each with a 4 dB gain. What is the total gain? How much is the signal amplified?
81. If the throughput at the connection between a device and the transmission medium is 5 Kbps, how long does it take to send 100,000 bits out of this device?
82. The light of the sun takes approximately eight minutes to reach the earth. What is the distance between the sun and the earth?
83. A signal has a wavelength of 1 μm in air. How far can the front of the wave travel during five periods?
84. A line has a signal-to-noise ratio of 1000 and a bandwidth of 4000 KHz. What is the maximum data rate supported by this line?
85. We measure the performance of a telephone line (4 KHz of bandwidth). When the signal is 10 V, the noise is 5 mV. What is the maximum data rate supported by this telephone line?

Copyrighted material

CHAPTER 4

Digital Transmission

A computer network is designed to send information from one point in the network to another. In designing a network, we have two choices: convert information to either a digital signal or an analog signal. In this chapter, we discuss the first choice, using digital signals; in Chapter 5, we discuss the second choice, using analog signals.

We discussed the advantages and disadvantages of digital transmission over analog transmission in Chapter 3. In this chapter, we show the schemes and techniques that we can use to transmit data digitally. First, we discuss line coding, which is a technique to convert binary data to digital signals. Second, we show how to improve the efficiency of line coding. Third, we discuss sampling, a technique for changing analog data to binary data. After data are in binary form, we can then use line coding or a combination of block coding and line coding to change them to a digital signal. Finally, we discuss the parallel and serial transmission of digital signals.

4.1 LINE CODING

Line coding is the process of converting binary data, a sequence of bits, to a digital signal. For example, data, text, numbers, graphical images, audio, and video that are stored in computer memory are all sequences of bits (see Chapter 1). Line coding converts a sequence of bits to a digital signal. Figure 4.1 shows the concept of line coding.

Figure 4.1 *Line coding*

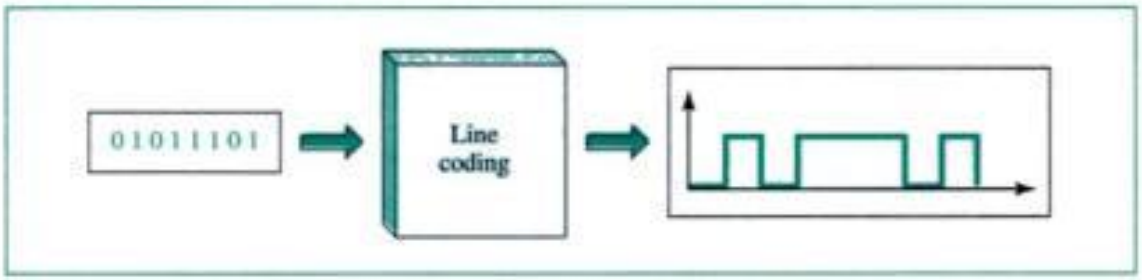

Some Characteristics of Line Coding

Before we discuss the different types of line coding, we need to understand some characteristics of line coding: signal level versus data level, pulse rate versus bit rate, dc components, and self-synchronization.

Copyrighted material

Signal Level versus Data Level

As discussed previously, a digital signal can have a limited number of values. However, only some of these values can be used to represent data; the rest are used for other purposes, as we will see shortly. We refer to the number of values allowed in a particular signal as the number of **signal levels;** we refer to the number of values used to represent data as the number of **data levels.** Figure 4.2 shows two examples of digital signals. The first signal has two signal levels and two data levels. The second signal has three signal levels and two data levels.

Figure 4.2 *Signal level versus data level*

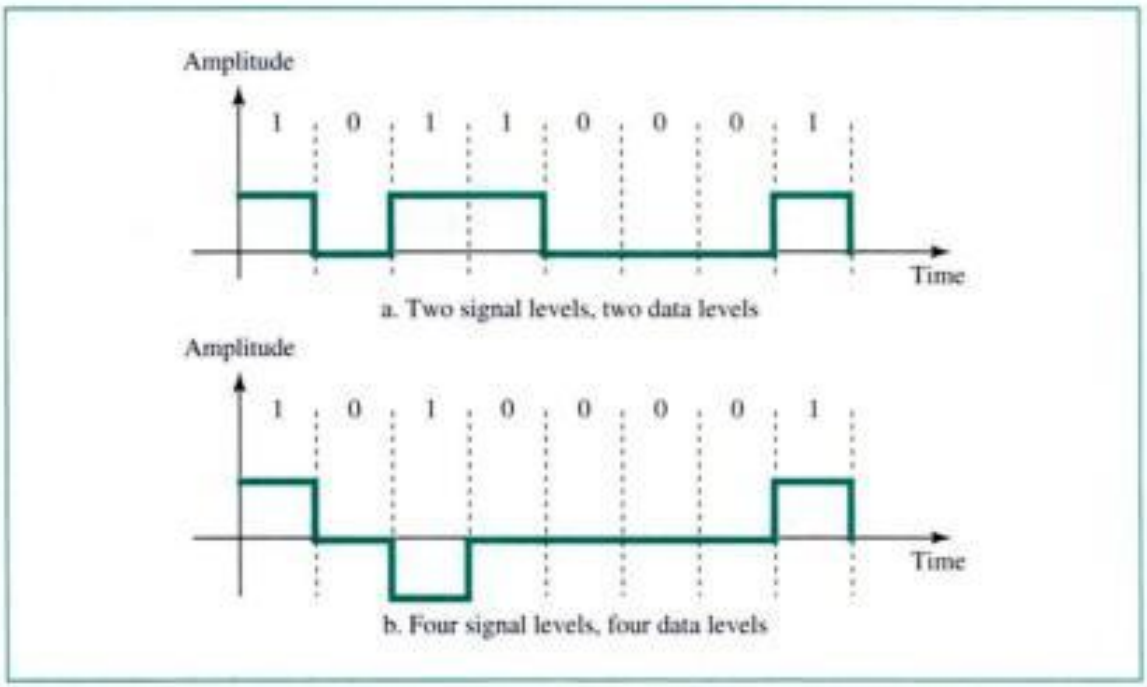

Pulse Rate versus Bit Rate

The **pulse rate** defines the number of pulses per second. A pulse is the minimum amount of time required to transmit a symbol. The **bit rate** defines the number of bits per second. If a pulse carries only 1 bit, the pulse rate and the bit rate are the same. If the pulse carries more than 1 bit, then the bit rate is greater than the pulse rate. In general, we have the following formula, in which L is the number of data levels of the signal:

$$\text{BitRate} = \text{PulseRate} \times \log_2 L$$

Example 1

A signal has two data levels with a pulse duration of 1 ms. We calculate the pulse rate and bit rate as follows:

$$\text{PulseRate} = \frac{1}{1 \times 10^{-3}} = 1000 \text{ pulses/s}$$

$$\text{BitRate} = \text{PulseRate} \times \log_2 L = 1000 \times \log_2 2 = 1000 \text{ bps}$$

Copyrighted material

Example 2

A signal has four data levels with a pulse duration of 1 ms. We calculate the pulse rate and bit rate as follows:

$$\text{PulseRate} = \frac{1}{1 \times 10^{-3}} = 1000 \text{ pulses/s}$$

$$\text{BitRate} = \text{PulseRate} \times \log_2 L = 1000 \times \log_2 4 = 2000 \text{ bps}$$

DC Components

Some line coding schemes leave a residual direct-current (dc) component (zero-frequency). This component is undesirable for two reasons. First, if the signal is to pass through a system (such as a transformer) that does not allow the passage of a **dc component,** the signal is distorted and may create errors in the output. Second, this component is extra energy residing on the line and is useless. Figure 4.3 shows two line coding schemes. The first has a dc component; the positive voltages are not canceled by the negative voltages. The second has no dc component; the positive voltages are canceled by any negative voltages. The first does not pass through a transformer properly; the second does.

Figure 4.3 *DC component*

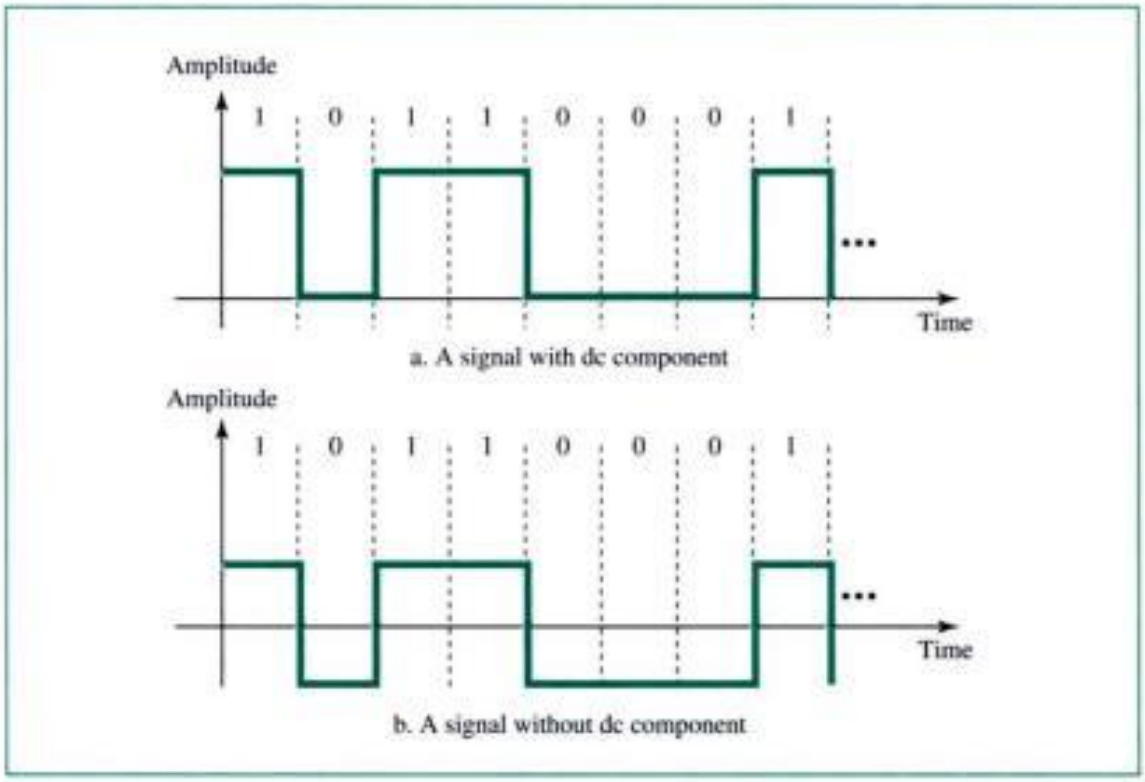

Self-Synchronization

To correctly interpret the signals received from the sender, the receiver's bit intervals must correspond exactly to the sender's bit intervals. If the receiver clock is faster or

Copyrighted material

slower, the bit intervals are not matched and the receiver might interpret the signals differently than the sender intended. Figure 4.4 shows a situation in which the receiver has a shorter bit duration. The sender sends 10110001, while the receiver receives 110111000011 (exaggerated situation).

Figure 4.4 *Lack of synchronization*

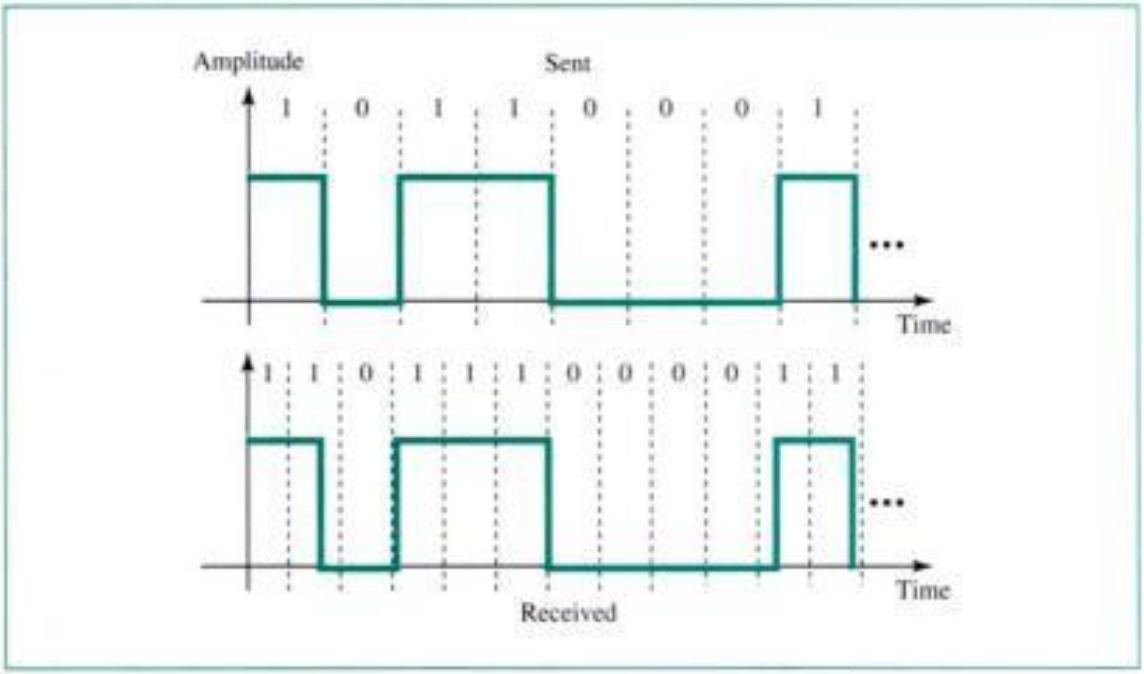

A **self-synchronizing** digital signal includes timing information in the data being transmitted. This can be achieved if there are transitions in the signal that alert the receiver to the beginning, middle, or end of the pulse. If the receiver's clock is out of synchronization, these alerting points can reset the clock.

Example 3

In a digital transmission, the receiver clock is 0.1 percent faster than the sender clock. How many extra bits per second does the receiver receive if the data rate is 1 Kbps? How many if the data rate is 1 Mbps?

Solution

At 1 Kbps, the receiver receives 1001 bps instead of 1000 bps.

1000 bits sent ⟶ 1001 bits received ⟶ 1 extra bps

At 1 Mbps, the receiver receives 1,001,000 bps instead of 1,000,000 bps.

1,000,000 bits sent ⟶ 1,001,000 bits received ⟶ 1000 extra bps

Line Coding Schemes

We can divide line coding schemes into three broad categories—*unipolar, polar,* and *bipolar*—as shown in Figure 4.5.

Copyrighted material

Figure 4.5 *Line coding schemes*

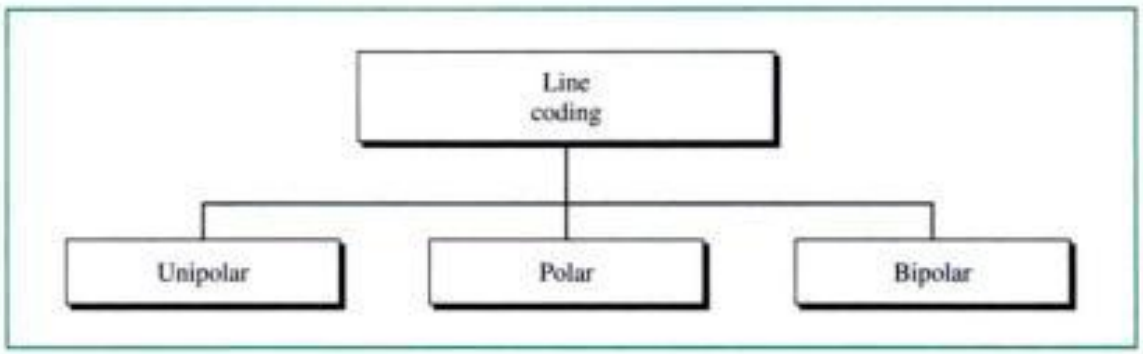

Unipolar

Unipolar encoding is very simple and very primitive. Although it is almost obsolete today, its simplicity provides an easy introduction to the concepts developed with the more complex encoding systems and allows us to examine the kinds of problems that any digital transmission system must overcome.

Digital transmission systems work by sending voltage pulses along a medium link, usually a wire or cable. In many types of encoding, one voltage level stands for binary 0, and another level stands for binary 1. The polarity of a pulse refers to whether it is positive or negative. Unipolar encoding is so named because it uses only one polarity. This polarity is assigned to one of the two binary states, usually the 1. The other state, usually the 0, is represented by zero voltage.

Unipolar encoding uses only one voltage level.

Figure 4.6 shows the idea of unipolar encoding. In this example, the 1s are encoded as a positive value, and the 0s are encoded as a zero value. In addition to being straightforward, unipolar encoding is inexpensive to implement.

However, unipolar encoding has at least two problems that make it undesirable: a dc component and a lack of synchronization. The average amplitude of a unipolar

Figure 4.6 *Unipolar encoding*

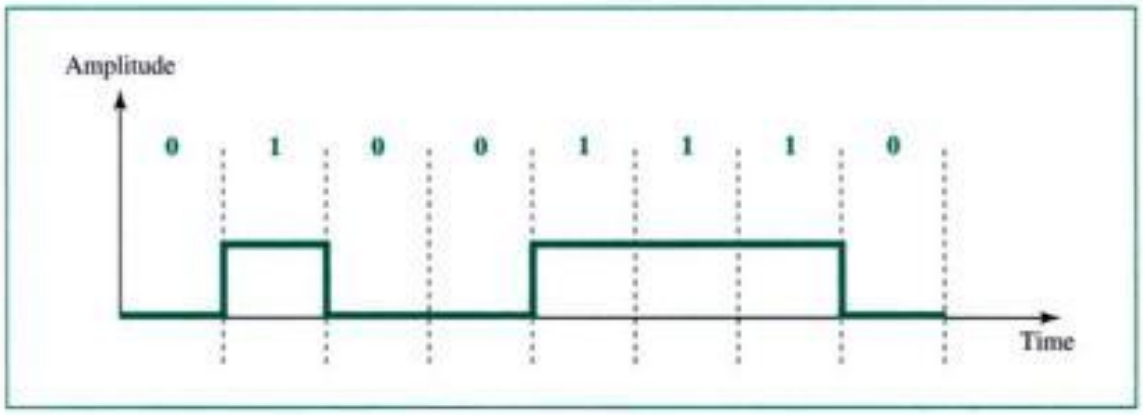

Copyrighted material

encoded signal is nonzero. This creates a dc component. Lack of synchronization is also an issue in unipolar encoding. If the data contain a long sequence of 0s or 1s, there is no change in the signal during this duration that can alert the receiver to potential synchronization problems.

Polar

Polar encoding uses two voltage levels, one positive and one negative. By using two levels, in most polar encoding methods the average voltage level on the line is reduced and the dc component problem seen in unipolar encoding is alleviated.

Polar encoding uses two voltage levels (positive and negative).

Of the many existing variations of polar encoding, we examine four of the most popular: **nonreturn to zero (NRZ), return to zero (RZ), Manchester,** and **differential Manchester** (see Fig. 4.7).

Figure 4.7 *Types of polar encoding*

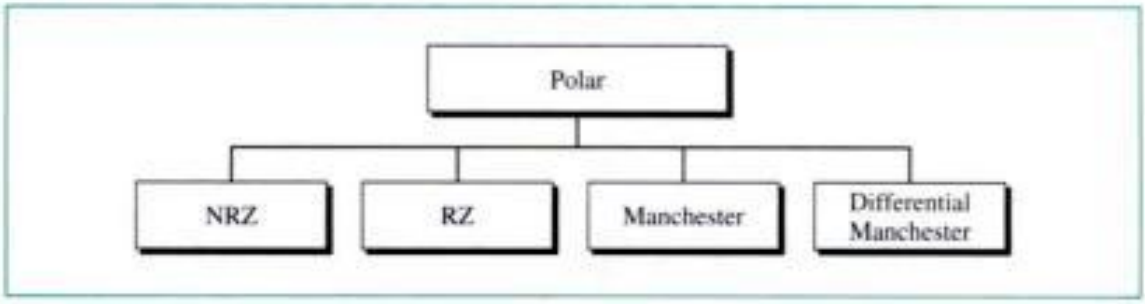

Nonreturn to Zero (NRZ) In NRZ encoding, the value of the signal is always either positive or negative. There are two popular forms of NRZ.

In **NRZ-L** (NRZ-level) encoding, the level of the signal depends on the type of bit that it represents. A positive voltage usually means the bit is a 0, while a negative voltage means the bit is a 1; thus, the level of the signal is dependent upon the state of the bit. A problem can arise when the data contain a long stream of 0s or 1s. The receiver receives a continuous voltage and determines how many bits are sent by relying on its clock, which may or may not be synchronized with the sender clock.

In NRZ-L the level of the signal is dependent upon the state of the bit.

In **NRZ-I** (NRZ-invert), an inversion of the voltage level represents a 1 bit. It is the transition between a positive and a negative voltage, not the voltage itself, that represents a 1 bit. A 0 bit is represented by no change. NRZ-I is superior to NRZ-L due to the synchronization provided by the signal change each time a 1 bit is encountered. The existence of 1s in the data stream allows the receiver to synchronize its timer to the

Copyrighted material

actual arrival of the transmission. A string of 0s can still cause problems, but because 0s are not as likely, they are less of a problem.

In NRZ-I the signal is inverted if a 1 is encountered.

Figure 4.8 shows the NRZ-L and NRZ-I representations of the same series of bits. In the NRZ-L sequence, positive and negative voltages have specific meanings: positive for 0 and negative for 1. In the NRZ-I sequence, the voltages per se are meaningless. Instead, the receiver looks for changes from one level to another as its basis for recognition of 1s.

Figure 4.8 *NRZ-L and NRZ-I encoding*

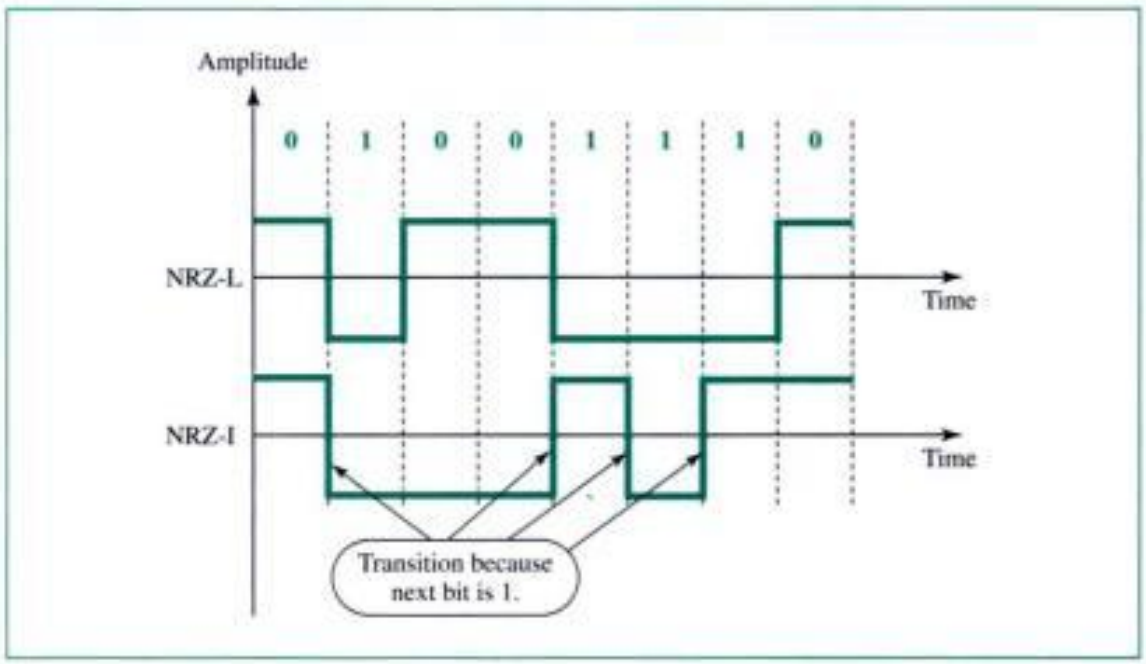

Return to Zero (RZ) As you can see, anytime the original data contain strings of consecutive 1s or 0s, the receiver can lose its place. A solution is to somehow include synchronization in the encoded signal, something like the solution provided by NRZ-I, but one capable of handling strings of 0s as well as 1s.

To ensure synchronization, there must be a signal change for each bit. The receiver can use these changes to build up, update, and synchronize its clock. As we saw above, NRZ-I accomplishes this for sequences of 1s. But to change with every bit, we need more than just two values. One solution is return to zero (RZ) encoding, which uses three values: positive, negative, and zero. In RZ, the signal changes not between bits but during each bit. Like NRZ-L, a positive voltage means 1 and a negative voltage means 0. But, unlike NRZ-L, halfway through each bit interval, the signal returns to zero. A 1 bit is actually represented by positive-to-zero and a 0 bit by negative-to-zero, rather than by positive and negative alone. Figure 4.9 illustrates the concept.

Copyrighted material

Figure 4.9 *RZ encoding*

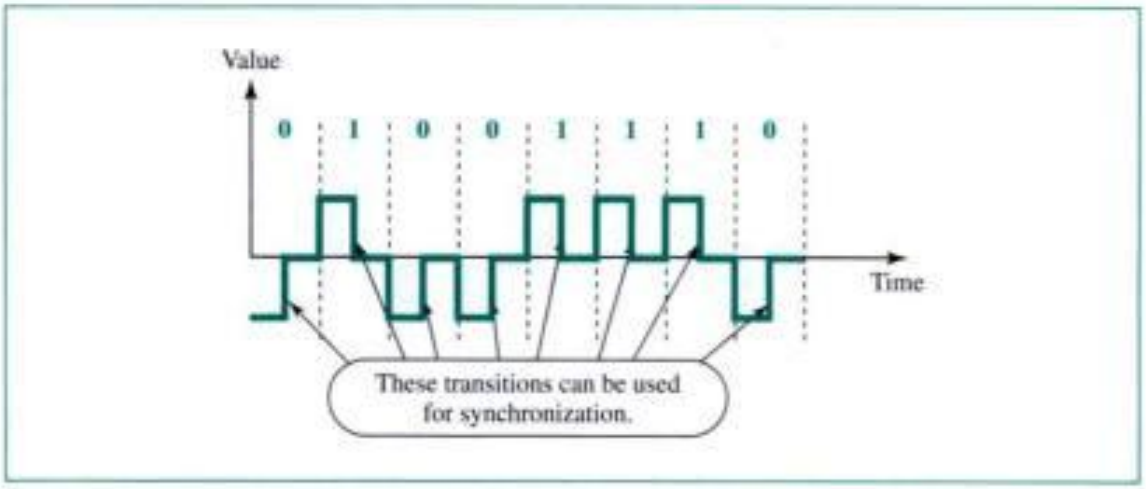

The main disadvantage of RZ encoding is that it requires two signal changes to encode 1 bit and therefore occupies more bandwidth. But of the three alternatives we have examined so far, it is the most effective.

A good encoded digital signal must contain a provision for synchronization.

Manchester Manchester encoding uses an inversion at the middle of each bit interval for both synchronization and bit representation. A negative-to-positive transition represents binary 1, and a positive-to-negative transition represents binary 0. By using a single transition for a dual purpose, Manchester encoding achieves the same level of synchronization as RZ but with only two levels of amplitude. Figure 4.10 shows Manchester encoding.

Figure 4.10 *Manchester encoding*

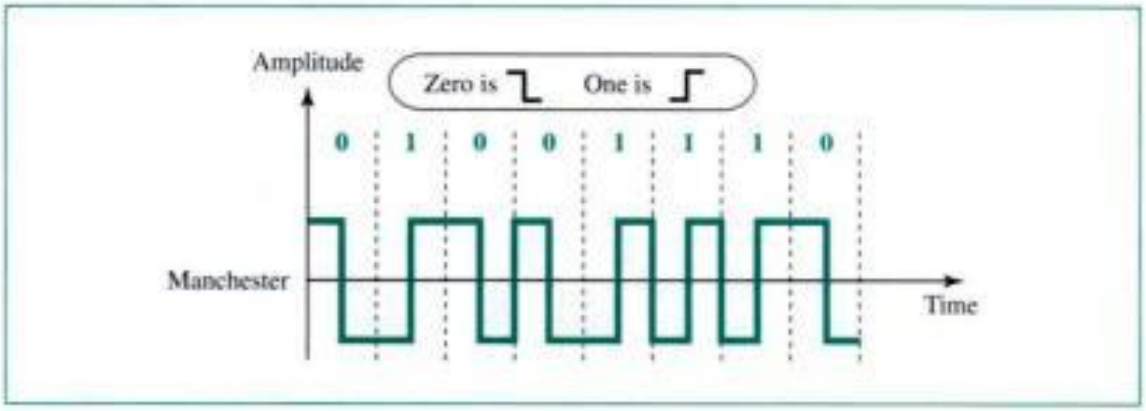

In Manchester encoding, the transition at the middle of the bit is used for both synchronization and bit representation.

Copyrighted material

Differential Manchester In differential Manchester encoding, the inversion at the middle of the bit interval is used for synchronization, but the presence or absence of an additional transition at the beginning of the interval is used to identify the bit. A transition means binary 0, and no transition means binary 1. Differential Manchester encoding requires two signal changes to represent binary 0 but only one to represent binary 1. Figure 4.11 shows differential Manchester encoding.

Figure 4.11 *Differential Manchester encoding*

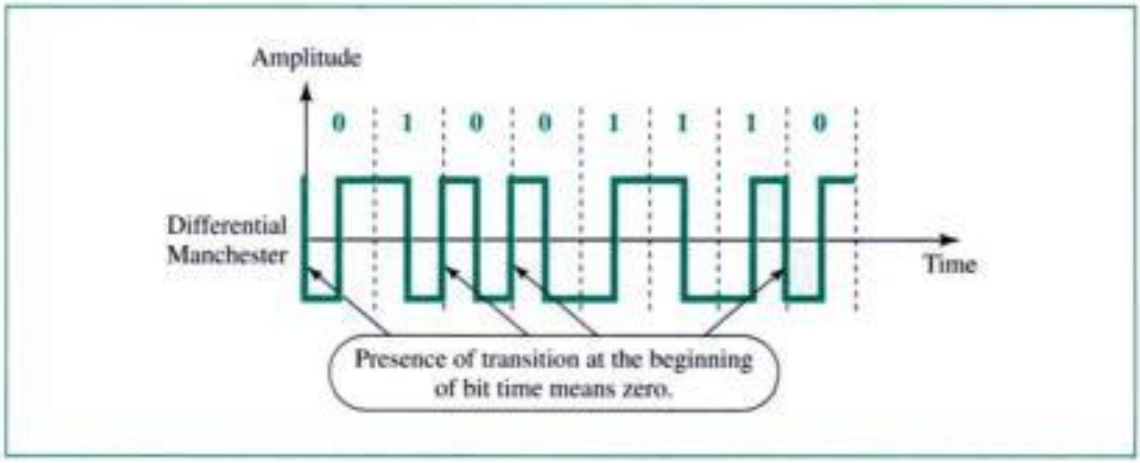

In differential Manchester encoding, the transition at the middle of the bit is used only for synchronization. The bit representation is defined by the inversion or noninversion at the beginning of the bit.

Bipolar

Bipolar encoding, like RZ, uses three voltage levels: positive, negative, and zero. Unlike RZ, however, the zero level in bipolar encoding is used to represent binary 0. The 1s are represented by alternating positive and negative voltages. If the first 1 bit is represented by the positive amplitude, the second will be represented by the negative amplitude, the third by the positive amplitude, and so on. This alternation occurs even when the 1 bits are not consecutive.

In bipolar encoding, we use three levels: positive, zero, and negative.

A common bipolar encoding scheme is called bipolar **alternate mark inversion (AMI).** In the term *alternate mark inversion,* the word *mark* comes from telegraphy and means 1. So AMI means alternate 1 inversion. A neutral, zero voltage represents binary 0. Binary 1s are represented by alternating positive and negative voltages. Figure 4.12 gives an example.

A modification of bipolar AMI has been developed to solve the problem of synchronizing sequential 0s, especially for long-distance transmission. It is called **B*n*ZS (bipolar *n*-zero substitution).** In this scheme, wherever *n* consecutive zeros occur in the sequence, some of the bits in these *n* bits become positive or negative which

Copyrighted material

Figure 4.12 *Bipolar AMI encoding*

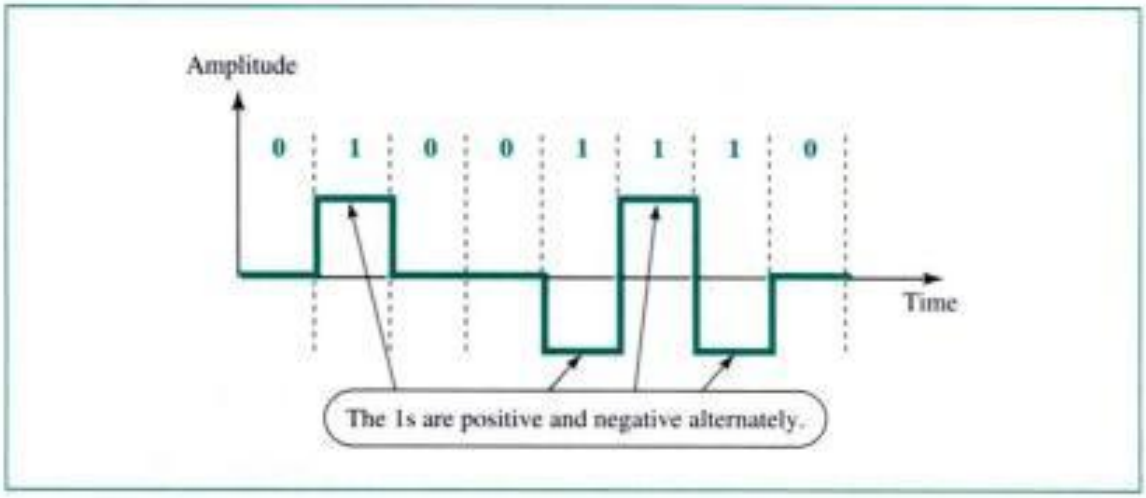

helps synchronization. This substitution violates the rules of AMI in a specified manner such that the receiver knows that these bits are actually 0s and not 1s.

Some Other Schemes

There are some other line coding schemes created for special purposes in data communications. We discuss two interesting ones here: 2B1Q and MLT-3.

2B1Q

The 2B1Q (two binary, one quaternary) uses four voltage levels. Each pulse can then represent 2 bits, making each pulse more efficient. Figure 4.13 shows an example of a 2B1Q signal.

Figure 4.13 *2B1Q*

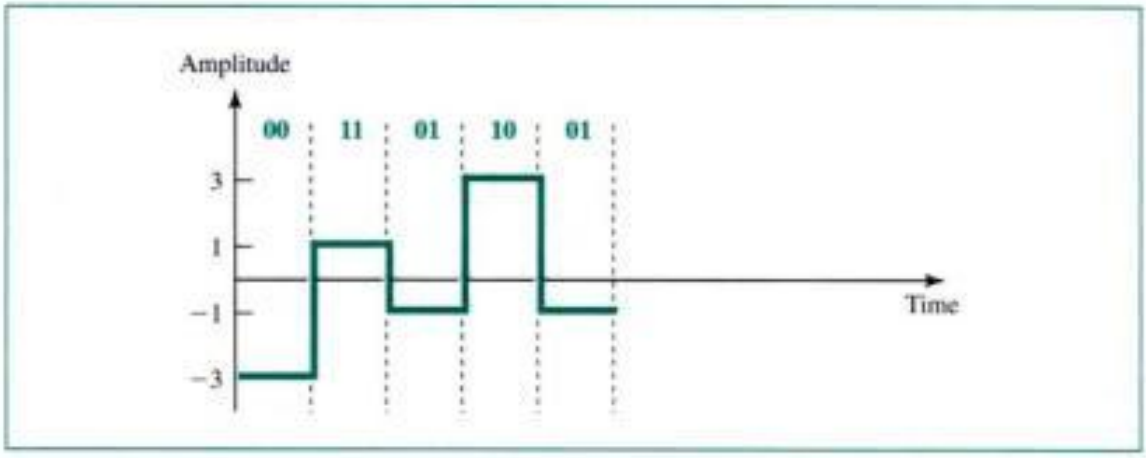

MLT-3

Multiline transmission, three level (MLT-3) is very similar to NRZ-I (nonreturn to zero, invert), but it uses three levels of signals (+1, 0, and −1). The signal transitions from

Copyrighted material

one level to the next at the beginning of a 1 bit; there is no transition at the beginning of a 0 bit. Figure 4.14 shows a sample MLT-3 signal.

Figure 4.14 *MLT-3 signal*

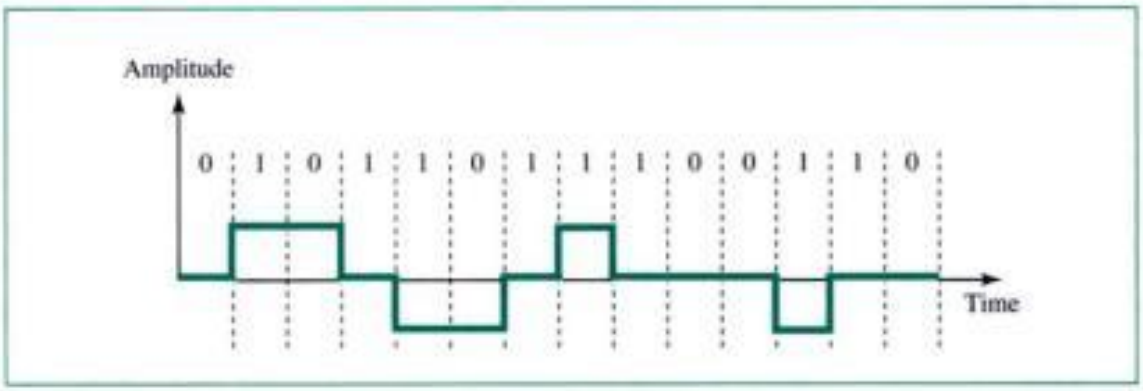

4.2 BLOCK CODING

To improve the performance of line coding, **block coding** was introduced. We need some kind of redundancy to ensure synchronization. In addition, we need to include other redundant bits (as we will see in Chapter 10) to detect errors. Block coding can achieve, to some extent, these two goals. Figure 4.15 shows the procedure.

Figure 4.15 *Block coding*

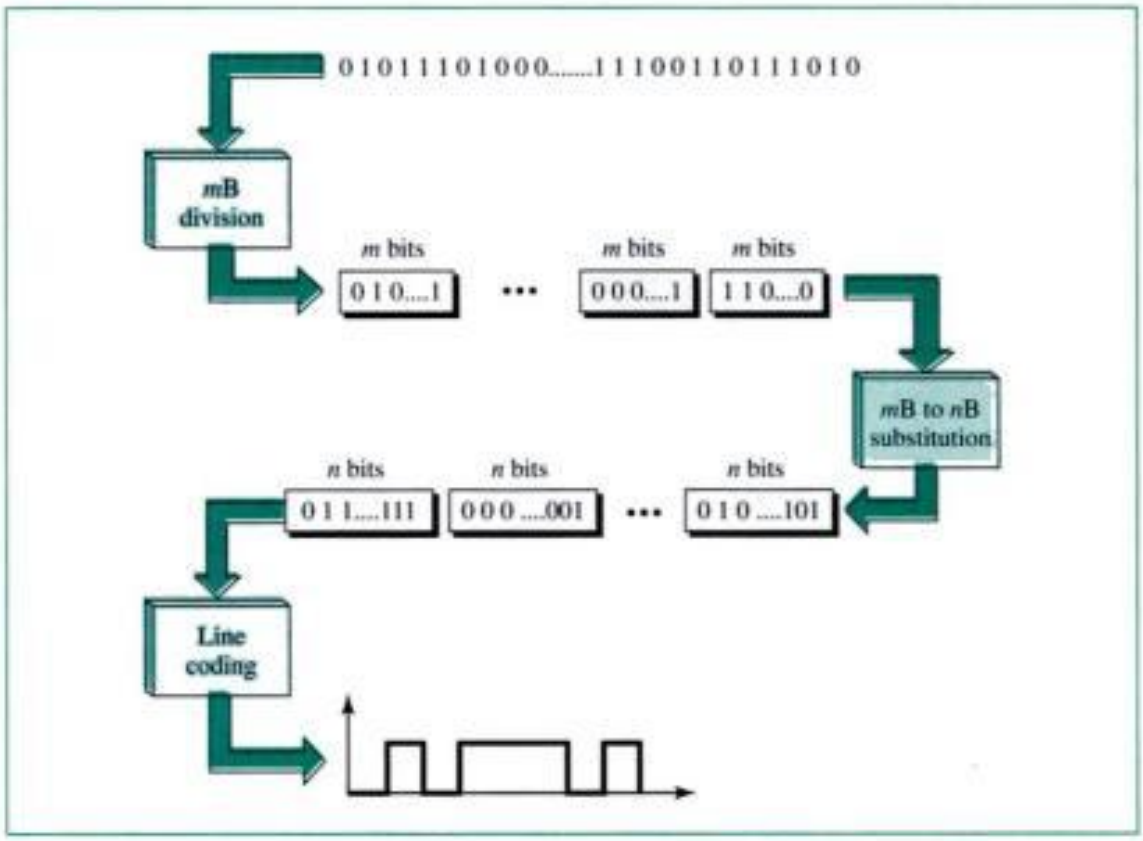

Copyrighted material

Steps in Transformation

In this method, there are three steps: division, substitution, and line coding.

Step 1: Division

In this step, the sequence of bits is divided into groups of *m* bits. For example, in 4B/5B encoding, the original bit sequence is divided into 4-bit groups.

Step 2: Substitution

The heart of block coding is the substitution step. In this step, we substitute an *m*-bit code for an *n*-bit group. For example, in 4B/5B encoding we substitute a 5-bit code for a 4-bit group. With a 4-bit block, we can have 16 (2^4) different groups. With a 5-bit code, we can have 32 (2^5) possible codes. This means that we can map some of the 5-bit groups to the 4-bit groups. Some of the 5-bit codes are not used. We can apply a strategy or a policy to choose only the 5-bit codes that help us in synchronization and error detection. Figure 4.16 shows how we can use just one-half of the 5-bit codes.

Figure 4.16 *Substitution in block coding*

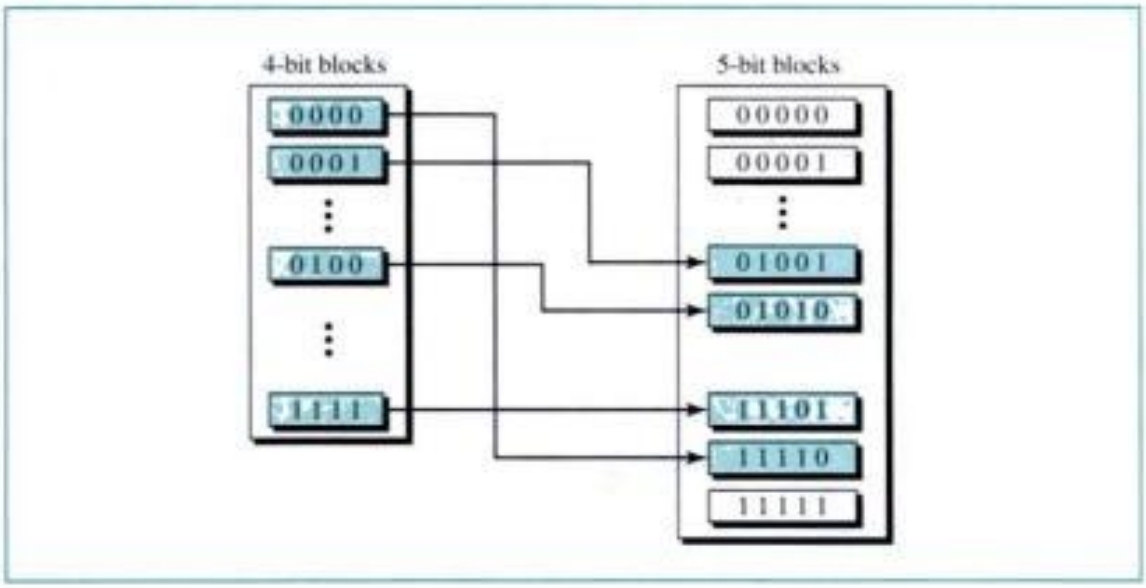

To achieve synchronization, we can use the 5-bit codes in such a way that, for example, we do not have more than three consecutive 0s or 1s.

Block coding can definitely help in error detection. Because only a subset of the 5-bit codes is used, if one or more of the bits in the block is changed in such a way that one of the unused codes is received, the receiver can easily detect the error.

Step 3: Line Coding

After the substitution, we can use one of the line coding schemes to create a signal. Normally a very simple line coding scheme is chosen because the block coding

Copyrighted material

procedure provides two desirable features of complex line coding schemes. Sometimes, as we will see, the second step (substitution) and the third step (line coding) are combined.

Some Common Block Codes

In this section, we discuss some common block codes.

4B/5B

As described above, in 4B/5B, every 4 bits of data is encoded into a 5-bit code. The selection of the 5-bit code is such that each code contains no more than one leading 0 and no more than two trailing 0s. Therefore, when these 5-bit codes are sent in sequence, no more than three consecutive 0s are encountered. The 5-bit codes are normally line coded using NRZ-I. Table 4.1 shows the 4B/5B encoding. The encoded sequences for control characters (column 3) do not follow the 4B/5B rules of coding.

Table 4.1 *4B/5B encoding*

Data Sequence	*Encoded Sequence*	*Data Sequence*	*Encoded Sequence*
0000	11110	Q (Quiet)	00000
0001	01001	I (Idle)	11111
0010	10100	H (Halt)	00100
0011	10101	J (start delimiter)	11000
0100	01010	K (start delimiter)	10001
0101	01011	T (end delimiter)	01101
0110	01110	S (Set)	11001
0111	01111	R (Reset)	00111
1000	10010		
1001	10011		
1010	10110		
1011	10111		
1100	11010		
1101	11011		
1110	11100		
1111	11101		

8B/10B

This is similar to 4B/5B encoding except that a group of 8 bits of data is now substituted by a 10-bit code. It provides more error detection capability than 4B/5B. The **8B/10B encoding** table is very long and is not shown here.

Copyrighted material

8B/6T

We saw that 4B/5B encoding and 8B/10B encoding provide good synchronization and error detection capabilities, but they come with a price; the required bandwidth is increased. Sometimes, we cannot afford this extra bandwidth. **8B/6T encoding** is designed to substitute an 8-bit group with a six-symbol code. However, each symbol is ternary, having one of three signal levels. This means that each block of 8-bit data is encoded as units of ternary signals (three levels, +1, 0, and −1 V). An 8-bit code can represent one of 256 possibilities (2^8); a six-symbol ternary signal can represent one of 729 possibilities (3^6). This means that some of the codes are not used. Encoding can be designed to maintain synchronization and error-checking capability. Appendix D shows the full table of 8B/6T encoded values. Figure 4.17 shows an example of 8B/6T encoding.

Figure 4.17 *Example of 8B/6T encoding*

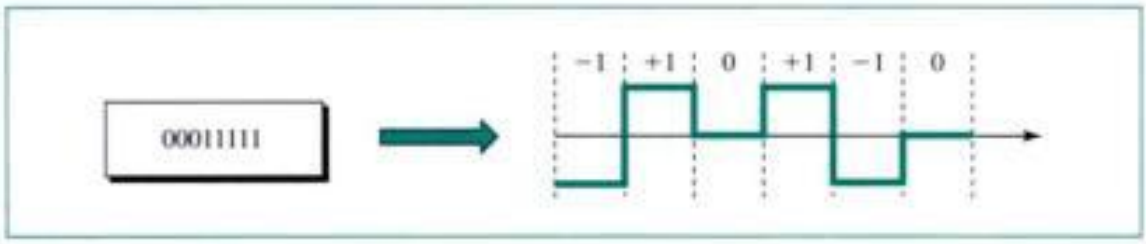

4.3 SAMPLING

Line coding and block coding can be used to convert binary data to a digital signal. Sometimes, however, our data are analog, such as audio. Voice and music, for example, are by nature analog, so when we record voice or video, we have created an analog electric signal. If we want to store the recording in the computer or send it digitally, we need to change it through a process called **sampling.** After the analog signal is sampled, we can store the binary data in the computer or use line coding (or a combination of block coding and line coding) to further change the signal to a digital one so it can be transmitted digitally.

The idea of digitizing analog signals started with telephone companies. To provide long-distance services, they have to carry analog signals, produced from voice channels, over long metallic media (cables). Electric signals lose their strength over metallic wire, which means amplifiers are needed to amplify signals. However, the amplifiers create distortion in the signal due to frequency spectrum and phase changes and also add some noise. The received signal is not the exact replica of the original signal. If you used the telephone system for long-distance communication some decades ago, you have noticed this phenomenon.

The solution found by the telephone companies was to digitize the analog signal at the sender. The signal is transmitted as a digital signal and converted back to an analog signal at the receiver.

As discussed in Chapter 3, digital signals are less prone to noise and distortion. A small change in an analog signal can change the received voice substantially, but it takes a considerable change to convert a 0 to 1 or a 1 to 0.

Copyrighted material

Pulse Amplitude Modulation (PAM)

One analog-to-digital conversion method is called **pulse amplitude modulation (PAM).** This technique takes an analog signal, samples it, and generates a series of pulses based on the results of the sampling. The term **sampling** means measuring the amplitude of the signal at equal intervals.

The method of sampling used in PAM is more useful to other areas of engineering than it is to data communication. However, PAM is the foundation of an important analog-to-digital conversion method called **pulse code modulation (PCM).**

In PAM, the original signal is sampled at equal intervals, as shown in Figure 4.18. PAM uses a technique called *sample and hold*. At a given moment, the signal level is read, then held briefly. The sampled value occurs only instantaneously in the actual waveform, but is generalized over a still short but measurable period in the PAM result.

Figure 4.18 *PAM*

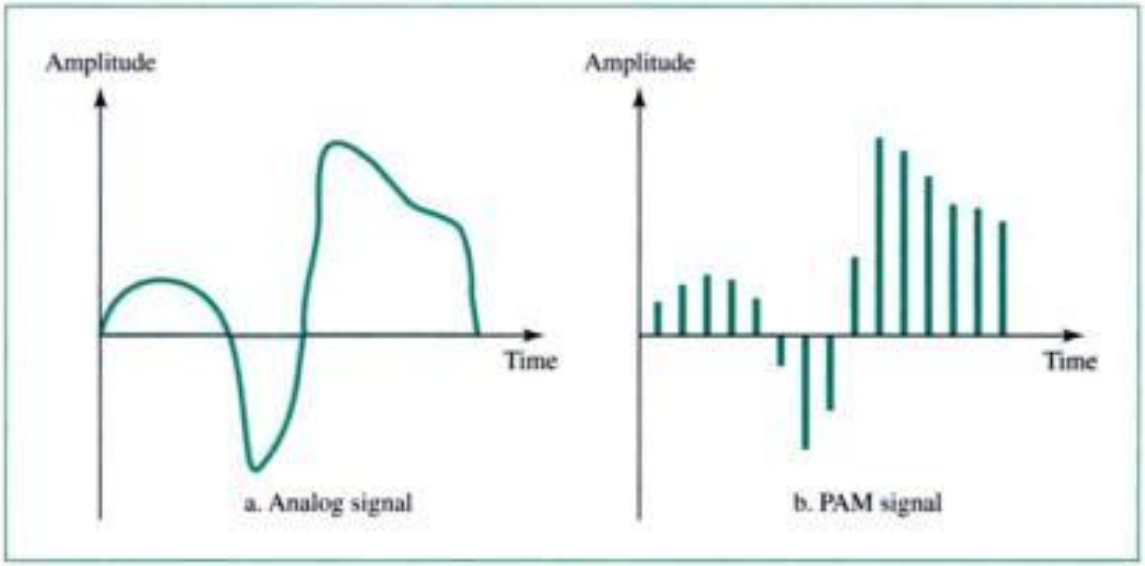

PAM is not useful to data communications because even though it translates the original waveform to a series of pulses, these pulses are still of any amplitude (still an analog signal, not digital). To make them digital, we must modify them by using pulse code modulation.

> Pulse amplitude modulation has some applications, but it is not used by itself in data communication. However, it is the first step in another very popular conversion method called pulse code modulation.

Pulse Code Modulation

PCM modifies the pulses created by PAM to create a completely digital signal. To do so, PCM first quantizes the PAM pulses. **Quantization** is a method of assigning integral

Copyrighted material

values in a specific range to sampled instances. The result of quantization is presented in Figure 4.19.

Figure 4.19 *Quantized PAM signal*

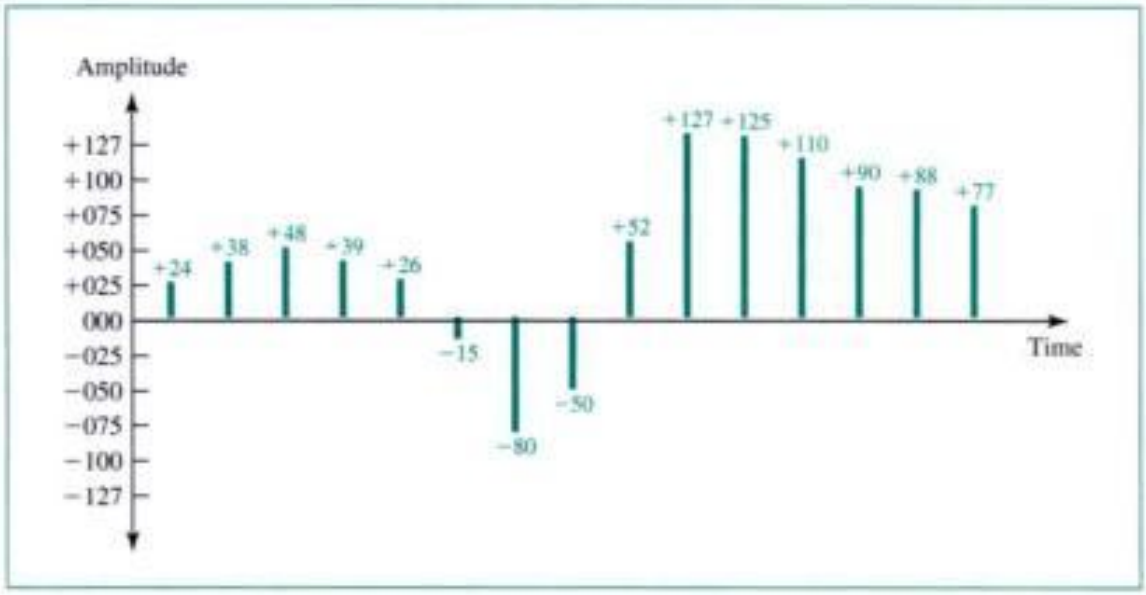

Figure 4.20 shows a simple method of assigning sign and magnitude to quantized samples. Each value is translated into its 7-bit binary equivalent. The eighth bit indicates the sign.

Figure 4.20 *Quantizing by using sign and magnitude*

+024	0 0011000	−015	1 0001111	+125	0 1111101
+038	0 0100110	−080	1 1010000	+110	0 1101110
+048	0 0110000	−050	1 0110010	+090	0 1011010
+039	0 0100111	+052	0 0110110	+088	0 1011000
+026	0 0011010	+127	0 1111111	+077	0 1001101

Sign bit
+ is 0 − is 1

The binary digits are then transformed to a digital signal by using one of the line coding techniques. Figure 4.21 shows the result of the pulse code modulation of the original signal encoded finally into a unipolar signal. Only the first three sampled values are shown.

PCM is actually made up of four separate processes: PAM, quantization, binary encoding, and line coding. Figure 4.22 shows the entire process in graphical form. PCM is the sampling method used to digitize voice in T-line transmission in the North American telecommunication system (see Chapter 6).

Copyrighted material

Figure 4.21 *PCM*

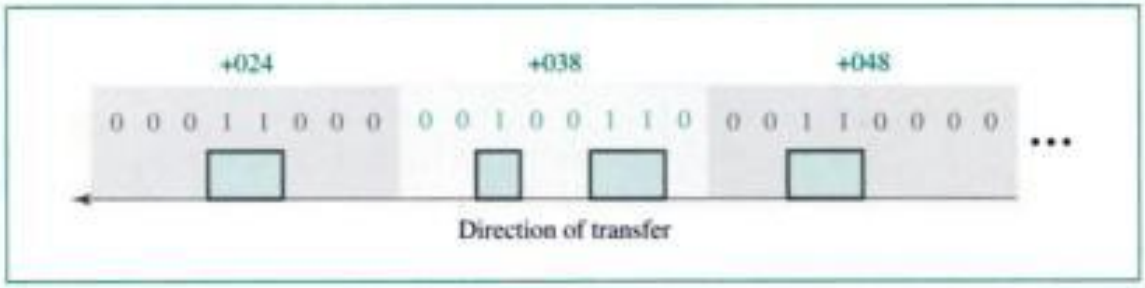

Figure 4.22 *From analog signal to PCM digital code*

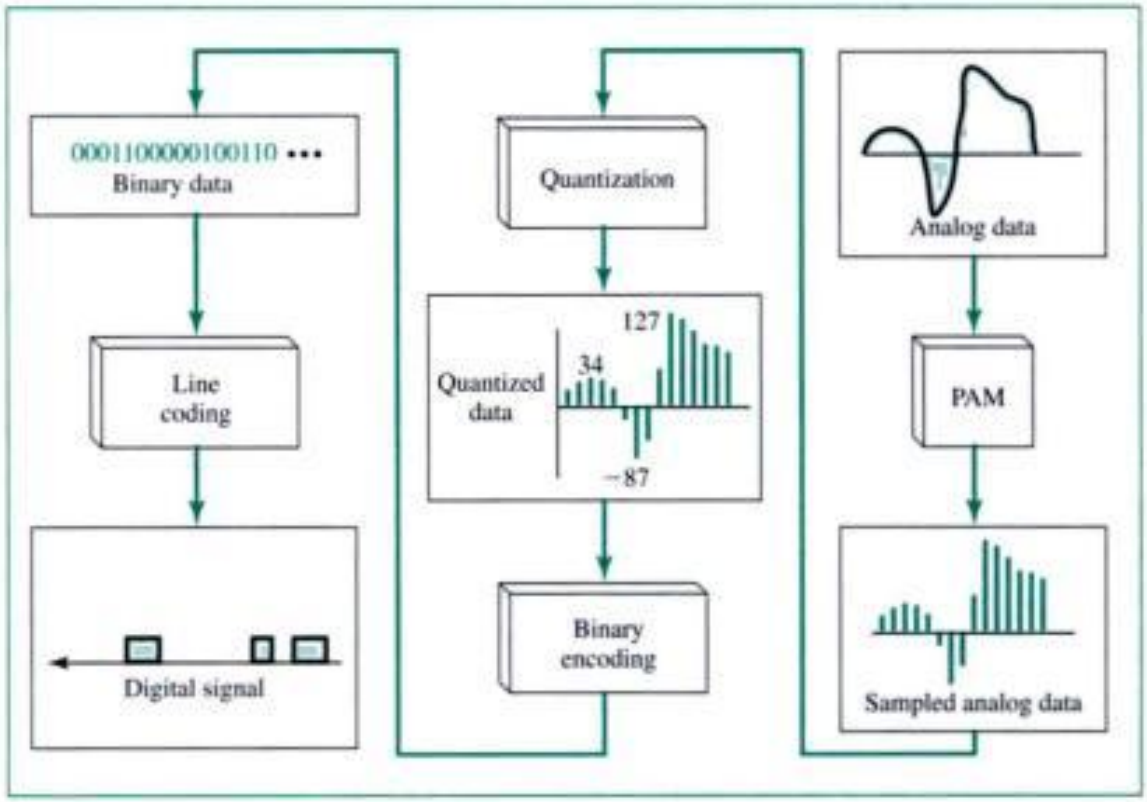

Sampling Rate: Nyquist Theorem

The accuracy of any digital reproduction of an analog signal depends on the number of samples taken. Using PAM and PCM, we can reproduce the waveform exactly by taking infinite samples, or we can reproduce the barest generalization of its direction of change by taking three samples. Obviously, we prefer to find a number somewhere between these two extremes. So the question is, How many samples are sufficient?

Actually, it requires remarkably little information for the receiving device to reconstruct an analog signal. According to the **Nyquist theorem,** to ensure the accurate reproduction of an original analog signal using PAM, the **sampling rate** must be at least twice the highest frequency of the original signal. So if we want to sample telephone voice with a maximum frequency 4000 Hz, we need a sampling rate of 8000 samples per second.

Copyrighted material

According to the Nyquist theorem, the sampling rate must be at least 2 times the highest frequency.

A sampling rate of twice the frequency of x Hz means that the signal must be sampled every $1/2x$ seconds. Using the voice-over-phone-lines example above, that means one sample every 1/8000 s. Figure 4.23 illustrates the concept.

Figure 4.23 *Nyquist theorem*

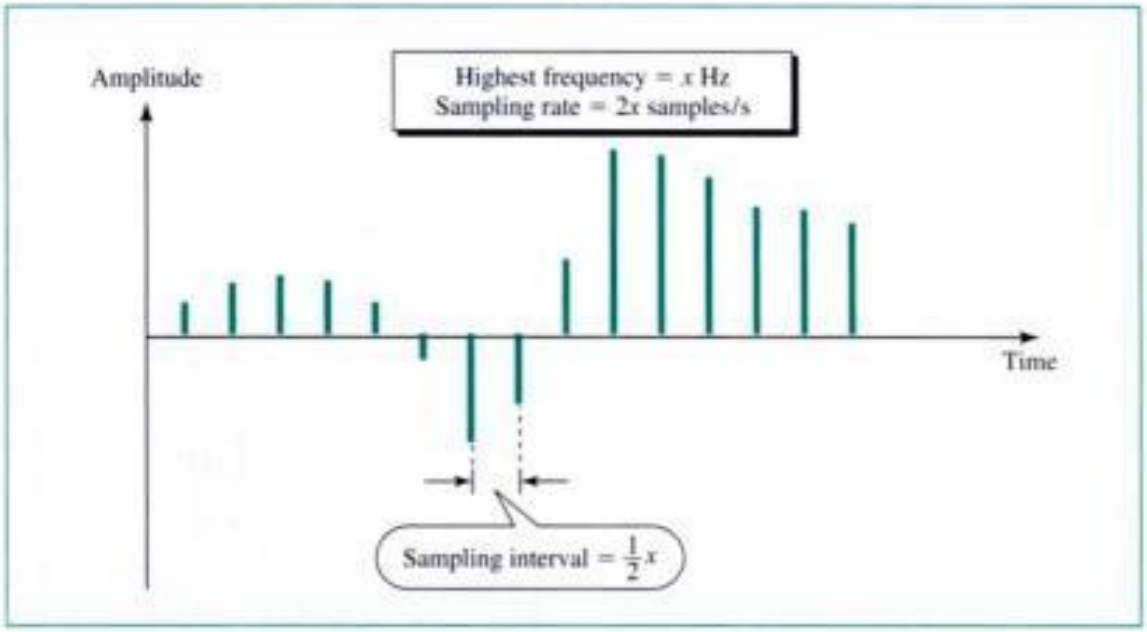

Note that we can always change a band-pass signal to a low-pass signal before sampling. In this case, the sampling rate is twice the bandwidth.

Example 4

What sampling rate is needed for a signal with a bandwidth of 10,000 Hz (1000 to 11,000 Hz)?

Solution

The sampling rate must be twice the highest frequency in the signal:

$$\text{Sampling rate} = 2 \times (11{,}000) = 22{,}000 \text{ samples/s}$$

How Many Bits per Sample?

After we have found the sampling rate, we need to determine the number of bits to be transmitted for each sample. This depends on the level of precision needed. The number of bits is chosen such that the original signal can be reproduced with the desired precision in amplitude.

Example 5

A signal is sampled. Each sample requires at least 12 levels of precision (+0 to +5 and −0 to −5). How many bits should be sent for each sample?

Copyrighted material

Solution

We need 4 bits; 1 bit for the sign and 3 bits for the value. A 3-bit value can represent $2^3 = 8$ levels (000 to 111), which is more than what we need. A 2-bit value is not enough since $2^2 = 4$. A 4-bit value is too much because $2^4 = 16$.

Bit Rate

After finding the number of bits per sample, we can calculate the bit rate by using the following formula:

$$\text{Bit rate} = \text{sampling rate} \times \text{number of bits per sample}$$

Example 6

We want to digitize the human voice. What is the bit rate, assuming 8 bits per sample?

Solution

The human voice normally contains frequencies from 0 to 4000 Hz. So the sampling rate is

$$\text{Sampling rate} = 4000 \times 2 = 8000 \text{ samples/s}$$

The bit rate can be calculated as

$$\text{Bit rate} = \text{sampling rate} \times \text{number of bits per sample} = 8000 \times 8 = 64{,}000 \text{ bps} = 64 \text{ Kbps}$$

4.4 TRANSMISSION MODE

Of primary concern when we are considering the transmission of data from one device to another is the wiring, and of primary concern when we are considering the wiring is the data stream. Do we send 1 bit at a time; or do we group bits into larger groups and, if so, how? The transmission of binary data across a link can be accomplished in either parallel or serial mode. In parallel mode, multiple bits are sent with each clock tick. In serial mode, 1 bit is sent with each clock tick. While there is only one way to send parallel data, there are two subclasses of serial transmission: synchronous and asynchronous (see Fig. 4.24).

Figure 4.24 *Data transmission*

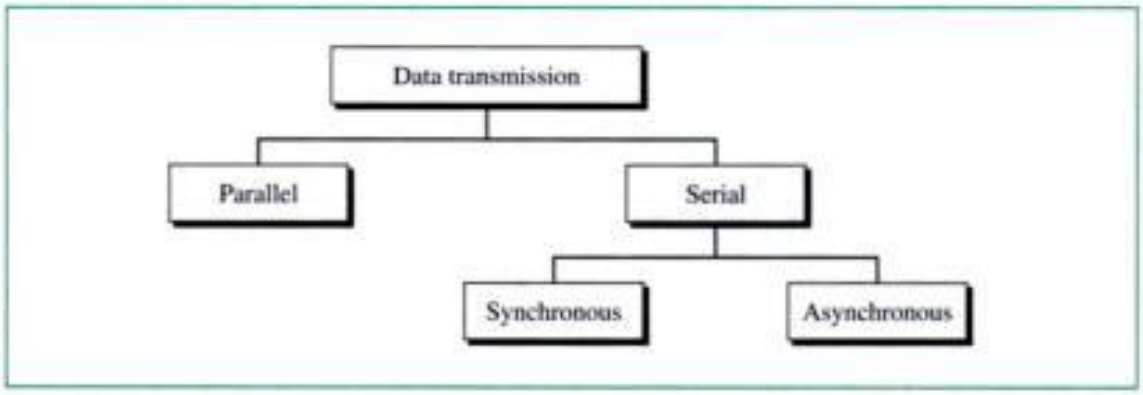

Copyrighted material

Parallel Transmission

Binary data, consisting of 1s and 0s, may be organized into groups of n bits each. Computers produce and consume data in groups of bits much as we conceive of and use spoken language in the form of words rather than letters. By grouping, we can send data n bits at a time instead of 1. This is called **parallel transmission.**

The mechanism for parallel transmission is a conceptually simple one: Use n wires to send n bits at one time. That way each bit has its own wire, and all n bits of one group can be transmitted with each clock tick from one device to another. Figure 4.25 shows how parallel transmission works for $n = 8$. Typically, the eight wires are bundled in a cable with a connector at each end.

Figure 4.25 *Parallel transmission*

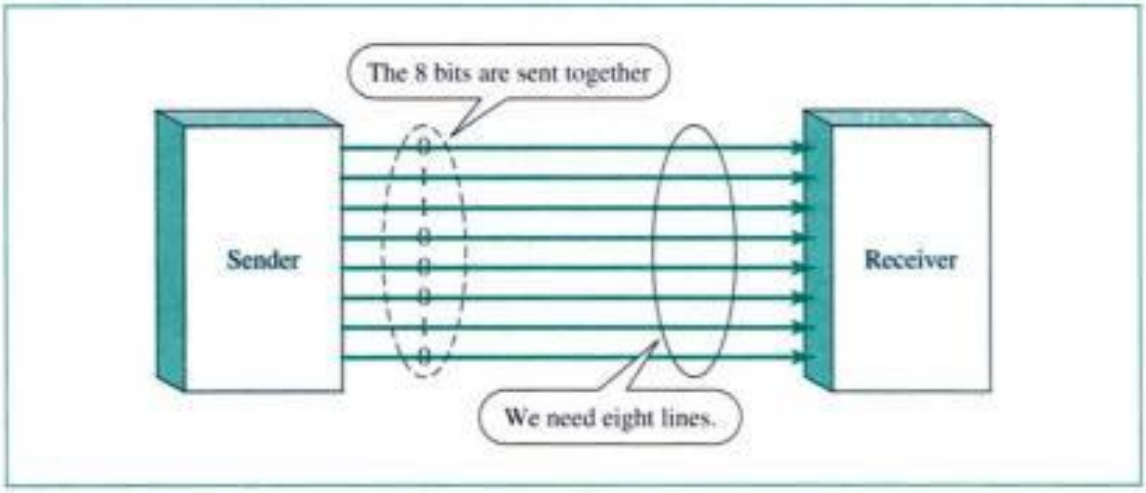

The advantage of parallel transmission is speed. All else being equal, parallel transmission can increase the transfer speed by a factor of n over serial transmission. But there is a significant disadvantage: cost. Parallel transmission requires n communication lines (wires in the example) just to transmit the data stream. Because this is expensive, parallel transmission is usually limited to short distances.

Serial Transmission

In **serial transmission** one bit follows another, so we need only one communication channel rather than n to transmit data between two communicating devices (see Fig. 4.26).

The advantage of serial over parallel transmission is that with only one communication channel, serial transmission reduces the cost of transmission over parallel by roughly a factor of n.

Since communication within devices is parallel, conversion devices are required at the interface between the sender and the line (parallel-to-serial) and between the line and the receiver (serial-to-parallel).

Serial transmission occurs in one of two ways: asynchronous or synchronous.

Copyrighted material

Figure 4.26 *Serial transmission*

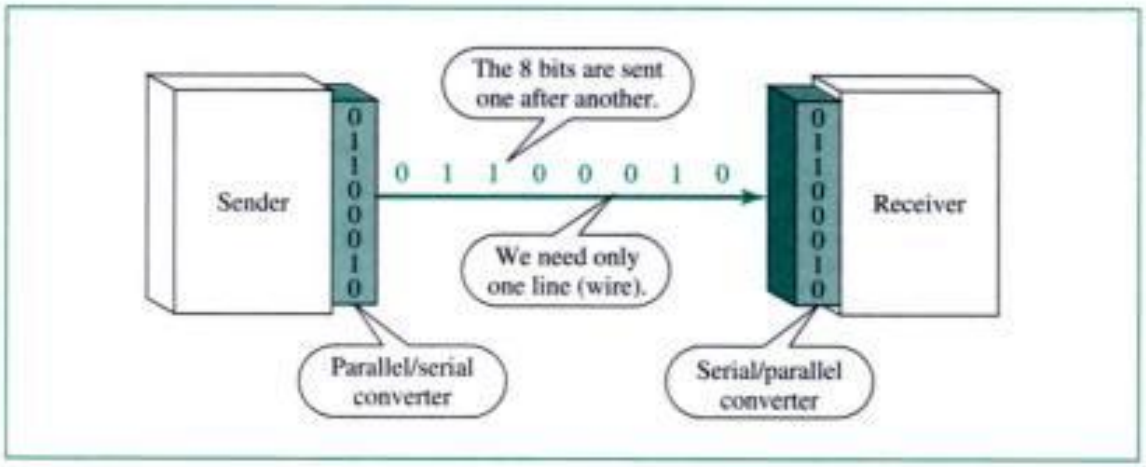

Asynchronous Transmission

Asynchronous transmission is so named because the timing of a signal is unimportant. Instead, information is received and translated by agreed-upon patterns. As long as those patterns are followed, the receiving device can retrieve the information without regard to the rhythm in which it is sent. Patterns are based on grouping the bit stream into bytes. Each group, usually 8 bits, is sent along the link as a unit. The sending system handles each group independently, relaying it to the link whenever ready, without regard to a timer.

Without synchronization, the receiver cannot use timing to predict when the next group will arrive. To alert the receiver to the arrival of a new group, therefore, an extra bit is added to the beginning of each byte. This bit, usually a 0, is called the **start bit.** To let the receiver know that the byte is finished, 1 or more additional bits are appended to the end of the byte. These bits, usually 1s, are called **stop bits.** By this method, each byte is increased in size to at least 10 bits, of which 8 are information and 2 or more are signals to the receiver. In addition, the transmission of each byte may then be followed by a gap of varying duration. This gap can be represented either by an idle channel or by a stream of additional stop bits.

In asynchronous transmission, we send 1 start bit (0) at the beginning and 1 or more stop bits (1s) at the end of each byte. There may be a gap between each byte.

The start and stop bits and the gap alert the receiver to the beginning and end of each byte and allow it to synchronize with the data stream. This mechanism is called asynchronous because, at the byte level, sender and receiver do not have to be synchronized. But within each byte, the receiver must still be synchronized with the incoming bit stream. That is, some synchronization is required, but only for the duration of a single byte. The receiving device resynchronizes at the onset of each new byte. When the receiver detects a start bit, it sets a timer and begins counting bits as they come in. After *n* bits, the receiver looks for a stop bit. As soon as it detects the stop bit, it waits until it detects the next start bit.

Copyrighted material

Asynchronous here means "asynchronous at the byte level," but the bits are still synchronized; their durations are the same.

Figure 4.27 is a schematic illustration of asynchronous transmission. In this example, the start bits are 0s, the stop bits are 1s, and the gap is represented by an idle line rather than by additional stop bits.

Figure 4.27 *Asynchronous transmission*

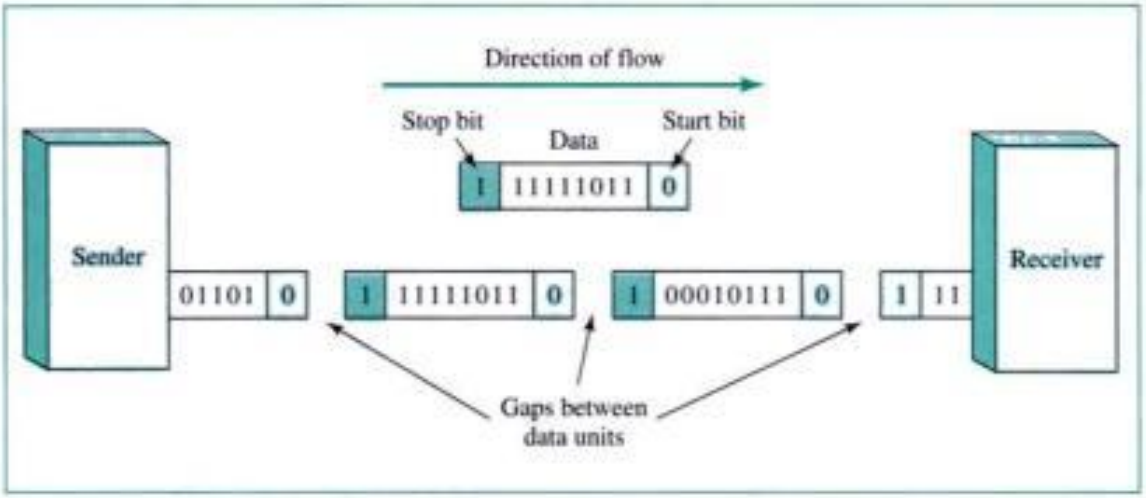

The addition of stop and start bits and the insertion of gaps into the bit stream make asynchronous transmission slower than forms of transmission that can operate without the addition of control information. But it is cheap and effective, two advantages that make it an attractive choice for situations such as low-speed communication. For example, the connection of a keyboard to a computer is a natural application for asynchronous transmission. A user types only one character at a time, types extremely slowly in data processing terms, and leaves unpredictable gaps of time between each character.

Synchronous Transmission

In **synchronous transmission,** the bit stream is combined into longer "frames," which may contain multiple bytes. Each byte, however, is introduced onto the transmission link without a gap between it and the next one. It is left to the receiver to separate the bit stream into bytes for decoding purposes. In other words, data are transmitted as an unbroken string of 1s and 0s, and the receiver separates that string into the bytes, or characters, it needs to reconstruct the information.

In synchronous transmission, we send bits one after another without start/stop bits or gaps. It is the responsibility of the receiver to group the bits.

Figure 4.28 gives a schematic illustration of synchronous transmission. We have drawn in the divisions between bytes. In reality, those divisions do not exist; the sender

Copyrighted material

puts its data onto the line as one long string. If the sender wishes to send data in separate bursts, the gaps between bursts must be filled with a special sequence of 0s and 1s that means *idle*. The receiver counts the bits as they arrive and groups them in 8-bit units.

Figure 4.28 *Synchronous transmission*

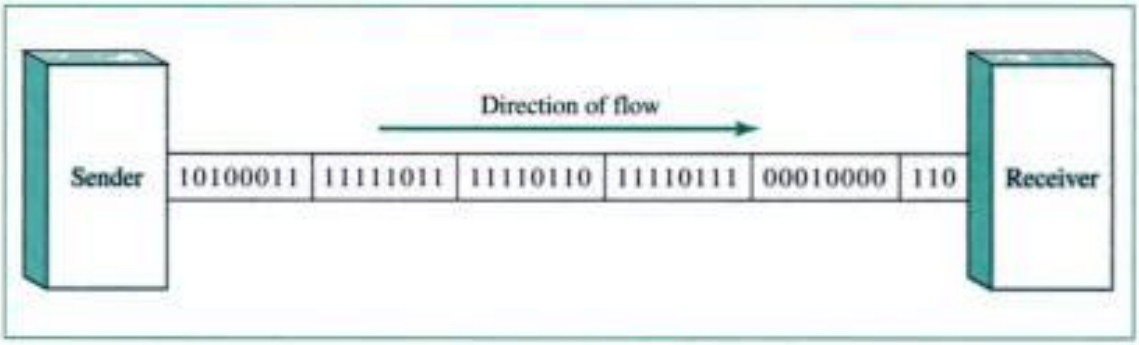

Without gaps and start/stop bits, there is no built-in mechanism to help the receiving device adjust its bit synchronization midstream. Timing becomes very important, therefore, because the accuracy of the received information is completely dependent on the ability of the receiving device to keep an accurate count of the bits as they come in.

The advantage of synchronous transmission is speed. With no extra bits or gaps to introduce at the sending end and remove at the receiving end and, by extension, with fewer bits to move across the link, synchronous transmission is faster than asynchronous transmission. For this reason, it is more useful for high-speed applications such as the transmission of data from one computer to another. Byte synchronization is accomplished in the data link layer.

4.5 KEY TERMS

2B1Q encoding
4B/5B encoding
8B/6T encoding
8B/10B encoding
alternate mark inversion (AMI)
asynchronous transmission
bipolar encoding
bipolar *n*-zero substitution (B*n*ZS)
bit rate
block coding
data level
dc component
differential Manchester encoding
line coding
Manchester encoding
multiline transmission, 3 level (MLT-3) encoding
nonreturn to zero (NRZ)
nonreturn to zero, invert (NRZ-I)
nonreturn to zero, level (NRZ-L)
Nyquist theorem
parallel transmission
polar encoding
pulse amplitude modulation (PAM)
pulse code modulation (PCM)
pulse rate
quantization
return to zero (RZ)
sampling
sampling rate

Copyrighted material

self-synchronization
serial transmission
signal level
start bit
stop bit
synchronous transmission
unipolar encoding

4.6 SUMMARY

- Line coding is the process of converting binary data to a digital signal.
- The number of different values allowed in a signal is the signal level. The number of symbols that represent data is the data level.
- Bit rate is a function of the pulse rate and data level.
- Line coding methods must eliminate the dc component and provide a means of synchronization between the sender and the receiver.
- Line coding methods can be classified as unipolar, polar, or bipolar.
- NRZ, RZ, Manchester, and differential Manchester encoding are the most popular polar encoding methods.
- AMI is a popular bipolar encoding method.
- Block coding can improve the performance of line coding through redundancy and error correction.
- Block coding involves grouping the bits, substitution, and line coding.
- 4B/5B, 8B/10B, and 8B/6T are common block coding methods.
- Analog-to-digital conversion relies on PCM (pulse code modulation).
- PCM involves sampling, quantizing, and line coding.
- The Nyquist theorem says that the sampling rate must be at least twice the highest-frequency component in the original signal.
- Digital transmission can be either parallel or serial in mode.
- In parallel transmission, a group of bits is sent simultaneously, with each bit on a separate line.
- In serial transmission, there is only one line and the bits are sent sequentially.
- Serial transmission can be either synchronous or asynchronous.
- In asynchronous serial transmission, each byte (group of 8 bits) is framed with a start bit and a stop bit. There may be a variable-length gap between each byte.
- In synchronous serial transmission, bits are sent in a continuous stream without start and stop bits and without gaps between bytes. Regrouping the bits into meaningful bytes is the responsibility of the receiver.

4.7 PRACTICE SET

Review Questions

1. Give the signal level for each line coding method discussed (NRZ, RZ, etc.).
2. What is the dc component?

Copyrighted material

3. Can the bit rate be less than the pulse rate? Why or why not?
4. Why is synchronization a problem in data communications?
5. How does NRZ-L differ from NRZ-I?
6. What is the major disadvantage in using NRZ encoding? How does RZ encoding attempt to solve the problem?
7. Compare and contrast RZ and bipolar AMI.
8. What are the three major steps in block coding?
9. How can block coding aid in synchronization?
10. How can block coding aid in error detection?
11. Discuss the relationship between the sampling rate and the received signal.
12. Discuss the relationship between the number of bits allotted for each sample and the received signal.
13. What is the Nyquist theorem?
14. Explain the two modes for transmitting binary data across a link.
15. What are the advantages and disadvantages of parallel transmission?
16. Compare the two methods of serial transmission. Discuss the advantages and disadvantages of each.

Multiple-Choice Questions

17. Unipolar, bipolar, and polar encoding are types of _____ encoding.
    a. Line
    b. Block
    c. NRZ
    d. Manchester
18. If a symbol is composed of 3 bits, there are _____ data levels.
    a. 2
    b. 4
    c. 8
    d. 16
19. Pulse rate is always _____ the bit rate.
    a. Greater than
    b. Less than
    c. Greater than or equal to
    d. Less than or equal to
20. _____ encoding has a transition at the middle of each bit.
    a. RZ
    b. Manchester
    c. Differential Manchester
    d. All the above

Copyrighted material

21. _____ encoding has a transition at the beginning of each 0 bit.
    a. RZ
    b. Manchester
    c. Differential Manchester
    d. All the above
22. PCM is an example of _____ conversion.
    a. Digital-to-digital
    b. Digital-to-analog
    c. Analog-to-analog
    d. Analog-to-digital
23. If the frequency spectrum of a signal has a bandwidth of 500 Hz with the highest frequency at 600 Hz, what should be the sampling rate, according to the Nyquist theorem?
    a. 200 samples/s
    b. 500 samples/s
    c. 1000 samples/s
    d. 1200 samples/s
24. The Nyquist theorem specifies the minimum sampling rate to be_____.
    a. Equal to the lowest frequency of a signal
    b. Equal to the highest frequency of a signal
    c. Twice the bandwidth of a signal
    d. Twice the highest frequency of a signal
25. One factor in the accuracy of a reconstructed PCM signal is the _____.
    a. Signal bandwidth
    b. Carrier frequency
    c. Number of bits used for quantization
    d. Baud rate
26. Which encoding type always has a nonzero average amplitude?
    a. Unipolar
    b. Polar
    c. Bipolar
    d. All the above
27. Which of the following encoding methods does not provide for synchronization?
    a. NRZ-L
    b. RZ
    c. NRZ-I
    d. Manchester
28. Which encoding method uses alternating positive and negative values for 1s?
    a. NRZ-I
    b. RZ

Copyrighted material

c. Manchester
d. AMI

29. In PCM, an analog-to- _____ conversion occurs.
a. Analog
b. Digital
c. QAM
d. Differential

30. If the maximum value of a PCM signal is 31 and the minimum value is –31, how many bits were used for coding?
a. 4
b. 5
c. 6
d. 7

31. RZ encoding involves _____ signal levels.
a. Two
b. Three
c. Four
d. Five

32. Which quantization level results in a more faithful reproduction of the signal?
a. 2
b. 8
c. 16
d. 32

33. Which encoding technique attempts to solve the loss of synchronization due to long strings of 0s?
a. B*n*ZS
b. NRZ
c. AMI
d. (a) and (b)

34. Block coding can help in _____ at the receiver.
a. Synchronization
b. Error detection
c. Attenuation
d. (a) and (b)

35. In _____ transmission, bits are transmitted simultaneously, each across its own wire.
a. Asynchronous serial
b. Synchronous serial
c. Parallel
d. (a) and (b)

Copyrighted material

36. In _____ transmission, bits are transmitted over a single wire, one at a time.
    a. Asynchronous serial
    b. Synchronous serial
    c. Parallel
    d. (a) and (b)
37. In _____ transmission, a start bit and a stop bit frame a character byte.
    a. Asynchronous serial
    b. Synchronous serial
    c. Parallel
    d. (a) and (b)
38. In asynchronous transmission, the gap time between bytes is _____.
    a. Fixed
    b. Variable
    c. A function of the data rate
    d. Zero
39. Synchronous transmission does not have _____.
    a. A start bit
    b. A stop bit
    c. Gaps between bytes
    d. All the above

Exercises

40. If the bit rate of a signal is 1000 bps, how many bits can be sent in 5 s? How many bits in 1/5 s? How many bits in 100 ms?
41. Assume a data stream is made of ten 0s. Encode this stream, using the following encoding schemes. How many changes (vertical line) can you find for each scheme?
    a. Unipolar
    b. NRZ-L
    c. NRZ-I
    d. RZ
    e. Manchester
    f. Differential Manchester
    g. AMI
42. Repeat Exercise 41 for a data stream of ten 1s.
43. Repeat Exercise 41 for a data stream of 10 alternating 0s and 1s.
44. Repeat Exercise 41 for a data stream of three 0s followed by two 1s followed by two 0s and another three 1s.
45. Figure 4.29 is the unipolar encoding of a data stream. What is the data stream?
46. Figure 4.30 is the NRZ-L encoding of a data stream. What is the data stream?

Copyrighted material

Figure 4.29 *Exercise 45*

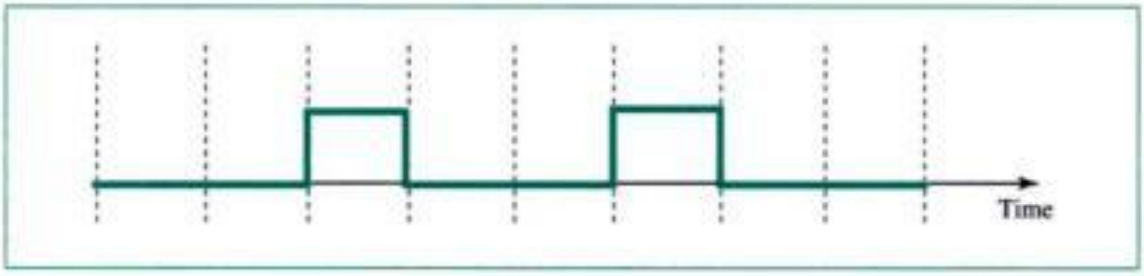

Figure 4.30 *Exercises 46 and 47*

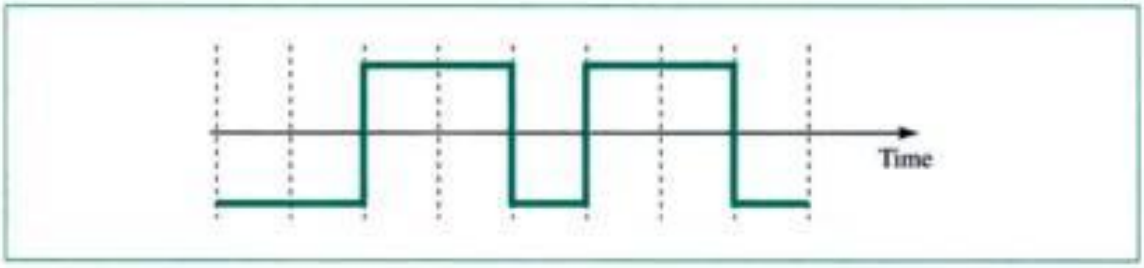

47. Repeat Exercise 46 if the figure is the NRZ-I encoding of a data stream.
48. Figure 4.31 is the RZ encoding of a data stream. What is the data stream?

Figure 4.31 *Exercise 48*

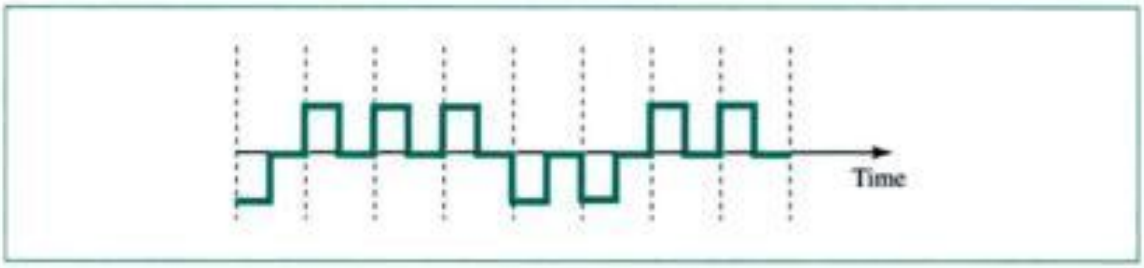

49. Figure 4.32 is the Manchester encoding of a data stream. What is the data stream?

Figure 4.32 *Exercises 49 and 50*

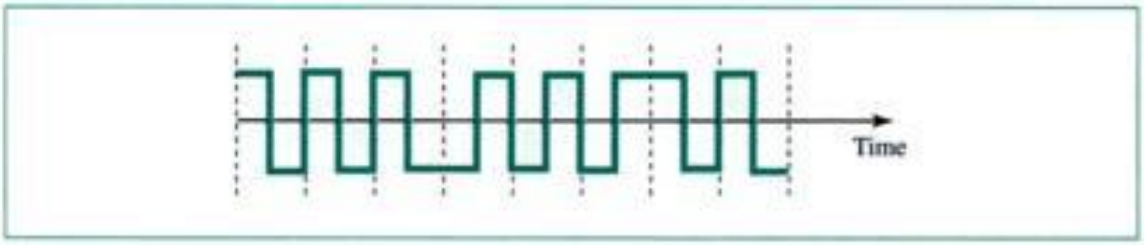

50. Repeat Exercise 49 if the figure is the differential Manchester encoding of a data stream.

Copyrighted material

51. Figure 4.33 is the AMI encoding of a data stream. What is the data stream?

Figure 4.33 *Exercises 51 and 52*

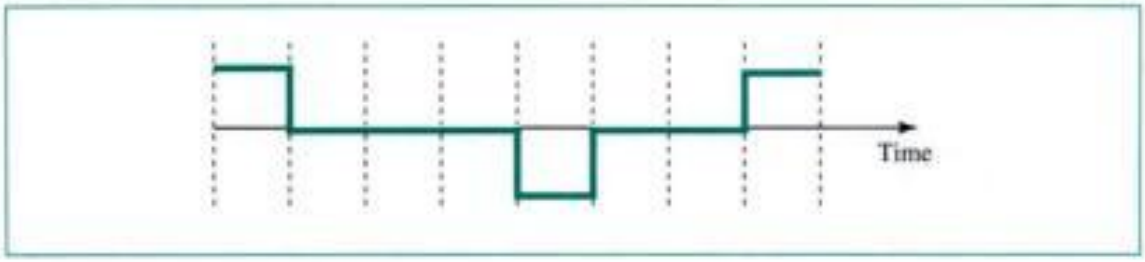

52. How many amplitude levels are there for each of the following methods?
    a. Unipolar
    b. NRZ-L
    c. NRZ-I
    d. RZ
    e. Manchester
    f. Differential Manchester
53. What is the sampling rate for PCM if the frequency ranges from 1000 to 4000 Hz?
54. Using the Nyquist theorem, calculate the sampling rate for the following analog signals.
    a. An analog signal with bandwidth of 2000 Hz
    b. An analog signal with frequencies from 2000 to 6000 Hz
    c. A signal with a horizontal line in the time-domain representation
    d. A signal with a vertical line in the time-domain representation
55. If a signal is sampled 8000 times per second, what is the interval between each sample?
56. If the interval between two samples in a digitized signal is 125 μs, what is the sampling rate?
57. A signal is sampled. Each sample represents one of four levels. How many bits are needed to represent each sample? If the sampling rate is 8000 samples per second, what is the bit rate?
58. If we want to transmit 1000 ASCII (see Appendix A) characters asynchronously, what is the minimum number of extra bits needed? What is the efficiency in percentage?

Copyrighted material

CHAPTER 5

Analog Transmission

In Chapter 3, we discussed the advantages and disadvantages of digital transmission and analog transmission. We mentioned that digital transmission is very desirable, but a low-pass channel with a very large bandwidth is needed. We also mentioned that analog transmission is the only choice if we have a channel which is band-pass in nature. Digital transmission was discussed in Chapter 4; we discuss analog transmission in this chapter.

Converting binary data or a low-pass analog signal to a band-pass analog signal is traditionally called *modulation*. In this chapter, we first discuss modulation of binary data. We then discuss modems, devices that actually do the modulation; we finally discuss modulation of low-pass analog signals.

5.1 MODULATION OF DIGITAL DATA

Modulation of binary data or **digital-to-analog modulation** is the process of changing one of the characteristics of an analog signal based on the information in a digital signal (0s and 1s). When you transmit data from one computer to another across a public access phone line, for example, the original data are digital, but because telephone wires carry analog signals, the data must be converted. The digital data must be modulated on an analog signal that has been manipulated to look like two distinct values corresponding to binary 1 and binary 0. Figure 5.1 shows the relationship between the digital information, the digital-to-analog modulating hardware, and the resultant analog signal.

Of the many mechanisms for digital-to-analog modulation, we will discuss only those most useful for data communications.

As discussed in Chapter 3, a sine wave is defined by three characteristics: amplitude, frequency, and phase. When we vary any one of these characteristics, we create a different version of that wave. If we then say that the original wave represents binary 1, the variation can represent binary 0, or vice versa. So, by changing one aspect of a simple electric signal back and forth, we can use it to represent digital data. Any of the three characteristics listed above can be altered in this way, giving us at least three mechanisms for modulating digital data into an analog signal: *amplitude shift keying (ASK), frequency shift keying (FSK),* and *phase shift keying (PSK).* In addition, there is a fourth (and better) mechanism that combines changes in both

Copyrighted material

Figure 5.1 *Digital-to-analog modulation*

Figure 5.2 *Types of digital-to-analog modulation*

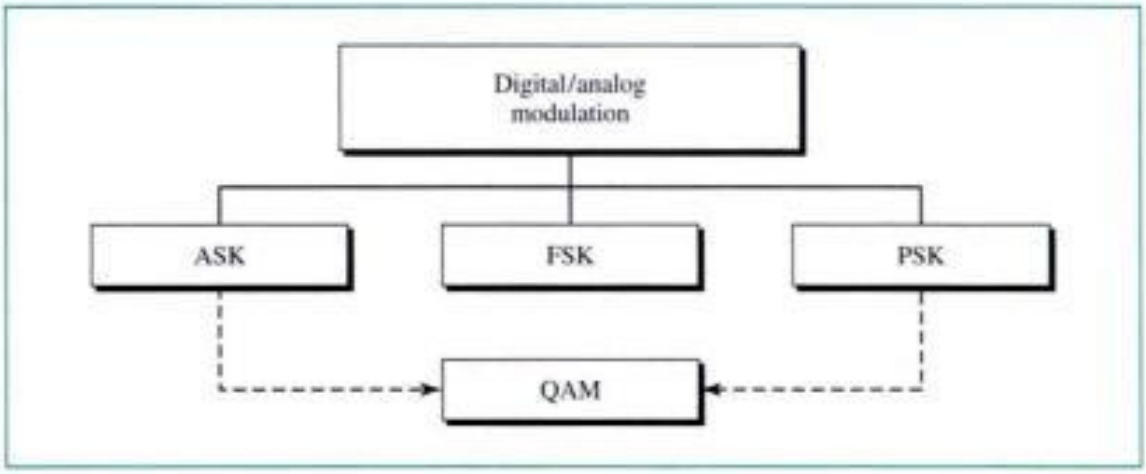

amplitude and phase called *quadrature amplitude modulation (QAM)*. QAM is the most efficient of these options and is the mechanism used in all modern modems (see Fig. 5.2).

Aspects of Digital-to-Analog Conversion

Before we discuss specific methods of digital-to-analog modulation, two basic issues must be defined: bit and baud rates and carrier signal.

Bit Rate and Baud Rate

Two terms used frequently in data communication are *bit rate* and *baud rate*. **Bit rate** is the number of bits transmitted during 1 s. **Baud rate** refers to the number of signal units per second that are required to represent those bits. A signal unit is composed of 1 or more bits. In discussions of computer efficiency, the bit rate is the more important—we want to know how long it takes to process each piece of information. In data transmission, however, we are more concerned with how efficiently we can move those data from place to place, whether in pieces or blocks. The fewer signal units required, the more efficient the system and the less bandwidth required to transmit more bits; so we are more concerned with the baud rate. The baud rate determines the bandwidth required to send the signal.

Copyrighted material

Bit rate equals the baud rate times the number of bits represented by each signal unit. The baud rate equals the bit rate divided by the number of bits represented by each signal unit. Bit rate is always greater than or equal to the baud rate.

Bit rate is the number of bits per second. Baud rate is the number of signal units per second. Baud rate is less than or equal to the bit rate.

An analogy can clarify the concept of bauds and bits. In transportation, a baud is analogous to a car, and a bit is analogous to a passenger. A car can carry one or more passengers. If 1000 cars go from one point to another, carrying only one passenger (the driver), then 1000 passengers are transported. However, if each car carries four passengers (carpooling), then 4000 passengers are transported. Note that the number of cars, not the number of passengers, determines the traffic and, therefore, the need for wider highways. Similarly, the number of bauds determines the required bandwidth, not the number of bits.

Example 1

An analog signal carries 4 bits in each signal unit. If 1000 signal units are sent per second, find the baud rate and the bit rate.

Solution

$$\text{Baud rate} = \text{number of signal units per second} = 1000 \text{ bauds per second (baud/s)}$$

$$\text{Bit rate} = \text{baud rate} \times \text{number of bits per signal unit} = 1000 \times 4 = 4000 \text{ bps}$$

Example 2

The bit rate of a signal is 3000. If each signal unit carries 6 bits, what is the baud rate?

Solution

$$\text{Baud rate} = \frac{\text{bit rate}}{\text{number of bits per signal unit}} = \frac{3000}{6} = 500 \text{ baud/s}$$

Carrier Signal

In analog transmission, the sending device produces a high-frequency signal that acts as a basis for the information signal. This base signal is called the **carrier signal** or carrier frequency. The receiving device is tuned to the frequency of the carrier signal that it expects from the sender. Digital information then modulates the carrier signal by modifying one or more of its characteristics (amplitude, frequency, or phase). This kind of modification is called **modulation** (or shift keying), and the information signal is called the *modulating signal*.

Amplitude Shift Keying (ASK)

In **amplitude shift keying,** the strength of the carrier signal is varied to represent binary 1 or 0. Both frequency and phase remain constant while the amplitude changes. Which voltage represents 1 and which represents 0 are left to the system designers. A bit duration is the period of time that defines 1 bit. The peak amplitude of the signal

Copyrighted material

during each bit duration is constant, and its value depends on the bit (0 or 1). Figure 5.3 gives a conceptual view of ASK.

Figure 5.3 *ASK*

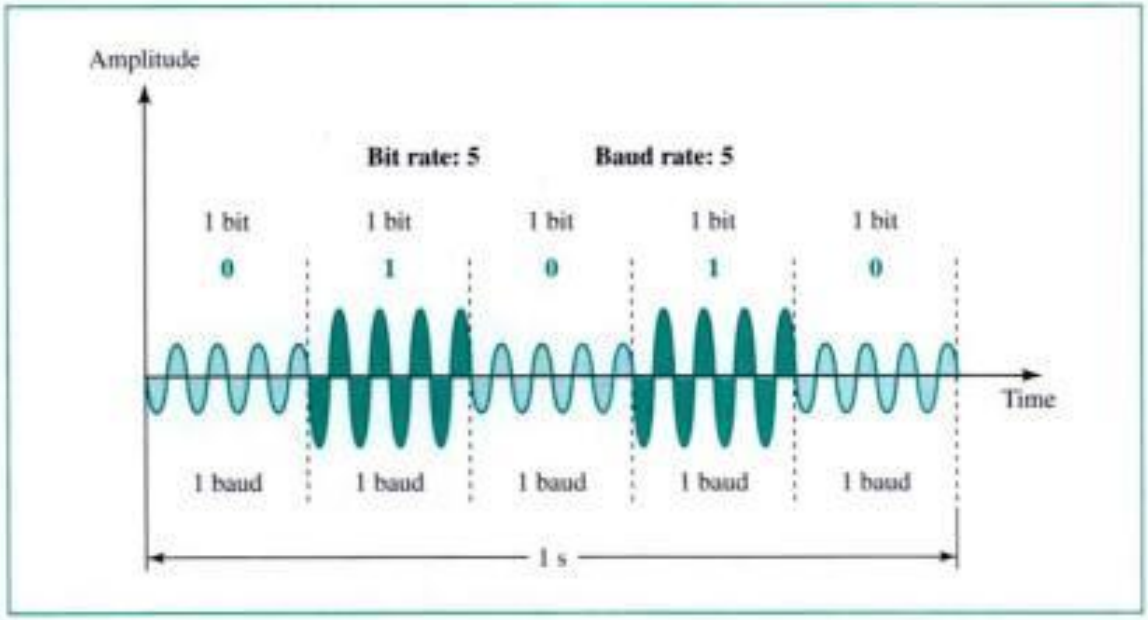

Unfortunately, ASK transmission is highly susceptible to noise interference. The term *noise* refers to unintentional voltages introduced onto a line by various phenomena such as heat or electromagnetic induction created by other sources. These unintentional voltages combine with the signal to change the amplitude. A 0 can be changed to 1, and a 1 to 0. You can see how noise would be especially problematic for ASK, which relies solely on amplitude for recognition. Noise usually affects the amplitude; therefore, ASK is the modulation method most affected by noise.

A popular ASK technique is called on/off keying (OOK). In OOK one of the bit values is represented by no voltage. The advantage is a reduction in the amount of energy required to transmit information.

Bandwidth for ASK

As you will recall from Chapter 3, the bandwidth of a signal is the total range of frequencies occupied by that signal. When we decompose an ASK-modulated signal, we get a spectrum of many simple frequencies. However, the most significant ones are those between $f_c - N_{baud}/2$ and $f_c + N_{baud}/2$ with the carrier frequency f_c at the middle (see Fig. 5.4).

Bandwidth requirements for ASK are calculated using the formula

$$BW = (1 + d) \times N_{baud}$$

where BW is the bandwidth, N_{baud} is the baud rate, and d is a factor related to the modulation process (with a minimum value of 0).

As you can see, the minimum bandwidth required for transmission is equal to the baud rate.

Copyrighted material

Figure 5.4 *Relationship between baud rate and bandwidth in ASK*

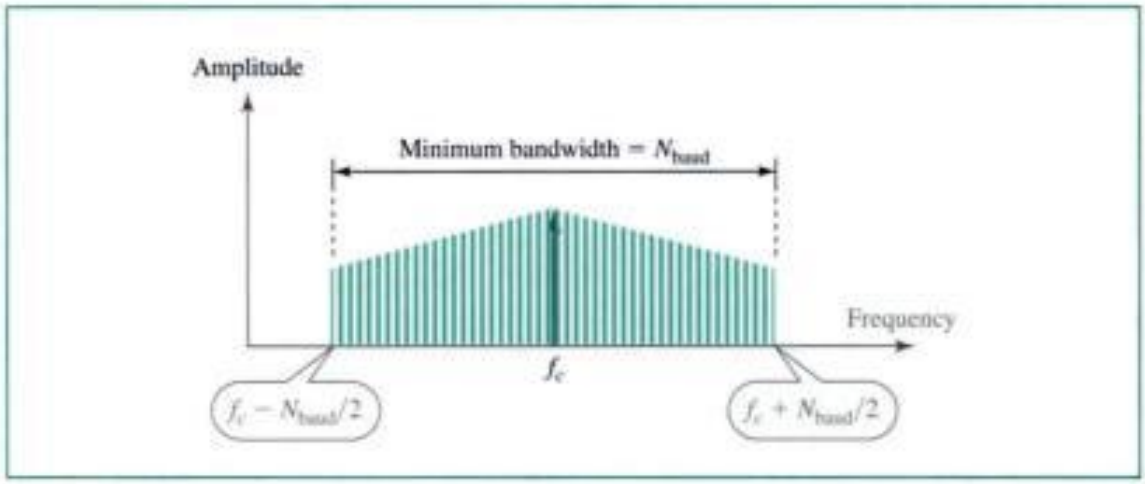

Although there is only one carrier frequency, the process of modulation produces a complex signal that is a combination of many simple signals, each with a different frequency.

Example 3

Find the minimum bandwidth for an ASK signal transmitting at 2000 bps. The transmission mode is half-duplex.

Solution

In ASK the baud rate and bit rate are the same. The baud rate is therefore 2000. An ASK signal requires a minimum bandwidth equal to its baud rate. Therefore, the minimum bandwidth is 2000 Hz.

Example 4

Given a bandwidth of 5000 Hz for an ASK signal, what are the baud rate and bit rate?

Solution

In ASK the baud rate is the same as the bandwidth, which means the baud rate is 5000. But because the baud rate and the bit rate are also the same for ASK, the bit rate is 5000 bps.

Example 5

Given a bandwidth of 10,000 Hz (1000 to 11,000 Hz), draw the full-duplex ASK diagram of the system. Find the carriers and the bandwidths in each direction. Assume there is no gap between the bands in the two directions.

Solution

For full-duplex ASK, the bandwidth for each direction is

$$\text{BW} = \frac{10{,}000}{2} = 5000 \text{ Hz}$$

The carrier frequencies can be chosen at the middle of each band (see Fig. 5.5).

$$f_{c(\text{forward})} = 1000 + \frac{5000}{2} = 3500 \text{ Hz}$$

$$f_{c(\text{backward})} = 11{,}000 - \frac{5000}{2} = 8500 \text{ Hz}$$

Copyrighted material

Figure 5.5 *Solution to Example 5*

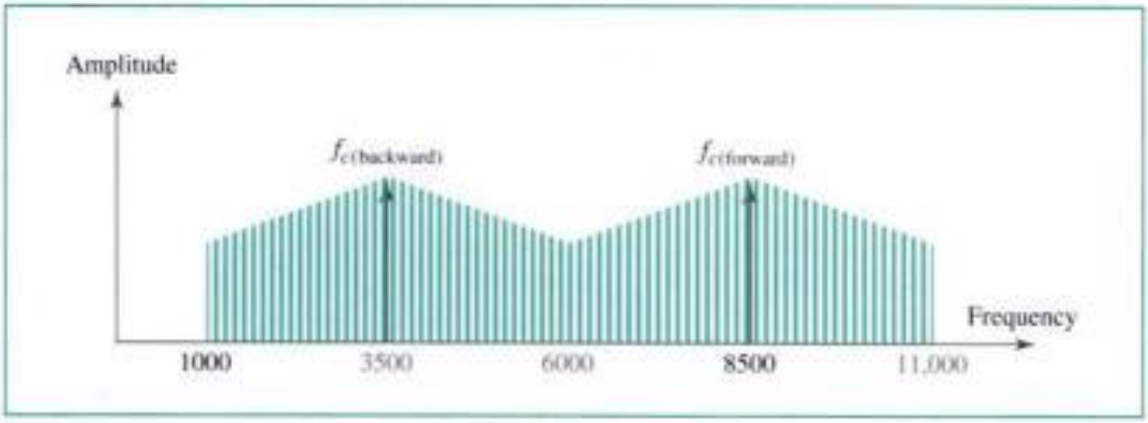

Frequency Shift Keying (FSK)

In **frequency shift keying,** the frequency of the carrier signal is varied to represent binary 1 or 0. The frequency of the signal during each bit duration is constant, and its value depends on the bit (0 or 1): Both peak amplitude and phase remain constant. Figure 5.6 gives a conceptual view of FSK.

Figure 5.6 *FSK*

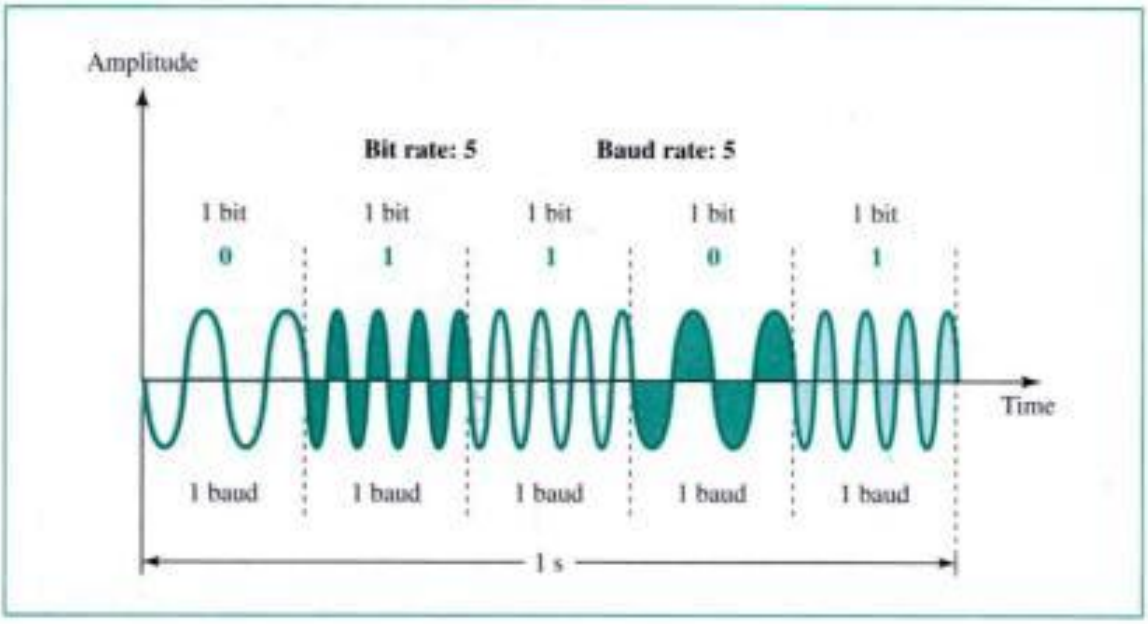

FSK avoids most of the problems from noise. Because the receiving device is looking for specific frequency changes over a given number of periods, it can ignore voltage spikes. The limiting factors of FSK are the physical capabilities of the carrier.

Bandwidth for FSK

Although FSK shifts between two carrier frequencies, it is easier to analyze as two coexisting frequencies. We can say that the FSK spectrum is a combination of two

Copyrighted material

ASK spectra centered on f_{c0} and f_{c1}. The bandwidth required for FSK transmission is equal to the baud rate of the signal plus the frequency shift (difference between the two carrier frequencies): $BW = f_{c1} - f_{c0} + N_{baud}$. See Figure 5.7.

Figure 5.7 *Relationship between baud rate and bandwidth in FSK*

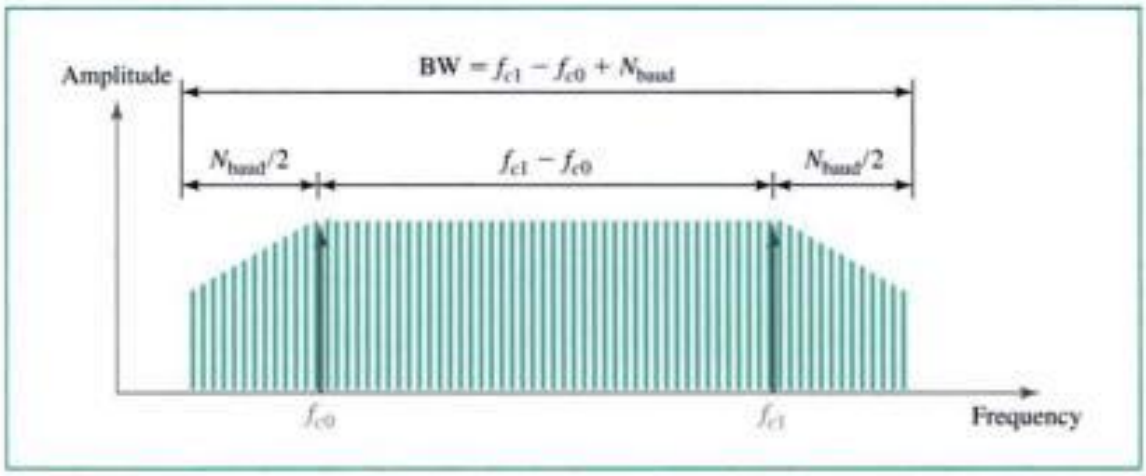

Although there are only two carrier frequencies, the process of modulation produces a composite signal that is a combination of many simple signals, each with a different frequency.

Example 6

Find the minimum bandwidth for an FSK signal transmitting at 2000 bps. Transmission is in half-duplex mode, and the carriers are separated by 3000 Hz.

Solution

For FSK, if f_{c1} and f_{c0} are the carrier frequencies, then

$$BW = \text{baud rate} + f_{c1} - f_{c0}$$

However, the baud rate here is the same as the bit rate. Therefore,

$$BW = \text{bit rate} + f_{c1} - f_{c0} = 2000 + 3000 = 5000 \text{ Hz}$$

Example 7

Find the maximum bit rates for an FSK signal if the bandwidth of the medium is 12,000 Hz and the difference between the two carriers is 2000 Hz. Transmission is in full-duplex mode.

Solution

Because the transmission is full duplex, only 6000 Hz is allocated for each direction. For FSK, if f_{c1} and f_{c0} are the carrier frequencies,

$$BW = \text{baud rate} + f_{c1} - f_{c0}$$

$$\text{Baud rate} = BW - (f_{c1} - f_{c0}) = 6000 - 2000 = 4000$$

But because the baud rate is the same as the bit rate, the bit rate is 4000 bps.

Copyrighted material

Phase Shift Keying (PSK)

In **phase shift keying,** the phase of the carrier is varied to represent binary 1 or 0. peak amplitude and frequency remain constant as the phase changes. For examp we start with a phase of 0° to represent binary 0, then we can change the phase to to send binary 1. The phase of the signal during each bit duration is constant, an value depends on the bit (0 or 1). Figure 5.8 gives a conceptual view of PSK.

Figure 5.8 *PSK*

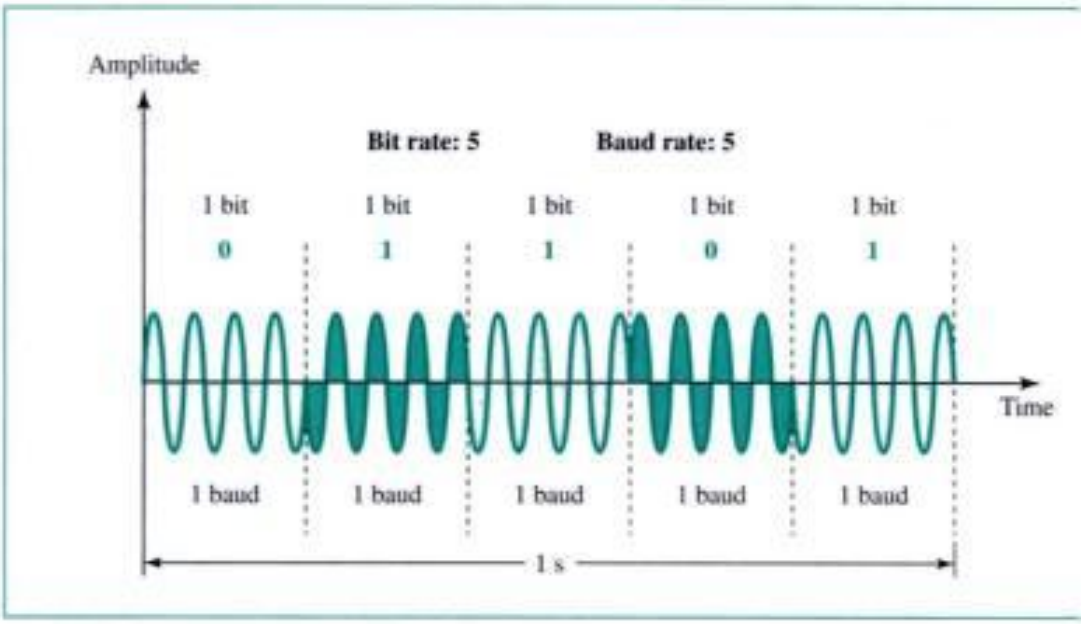

The above method is often called 2-PSK, or binary PSK, because two diffe phases (0° and 180°) are used. Figure 5.9 makes this point clearer by showing the tionship of phase to bit value. A second diagram, called a **constellation** or phase-diagram, shows the same relationship by illustrating only the phases.

Figure 5.9 *PSK constellation*

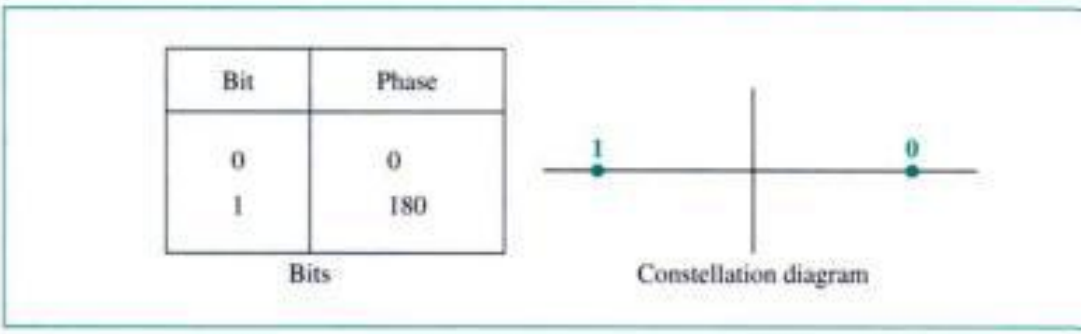

Bit	Phase
0	0
1	180

Bits

Constellation diagram

PSK is not susceptible to the noise degradation that affects ASK or to the b width limitations of FSK. This means that smaller variations in the signal ca detected reliably by the receiver. Therefore, instead of utilizing only two variations

Copyrighted material

signal, each representing 1 bit, we can use four variations and let each phase shift represent 2 bits (see Fig. 5.10).

Figure 5.10 *The 4-PSK method*

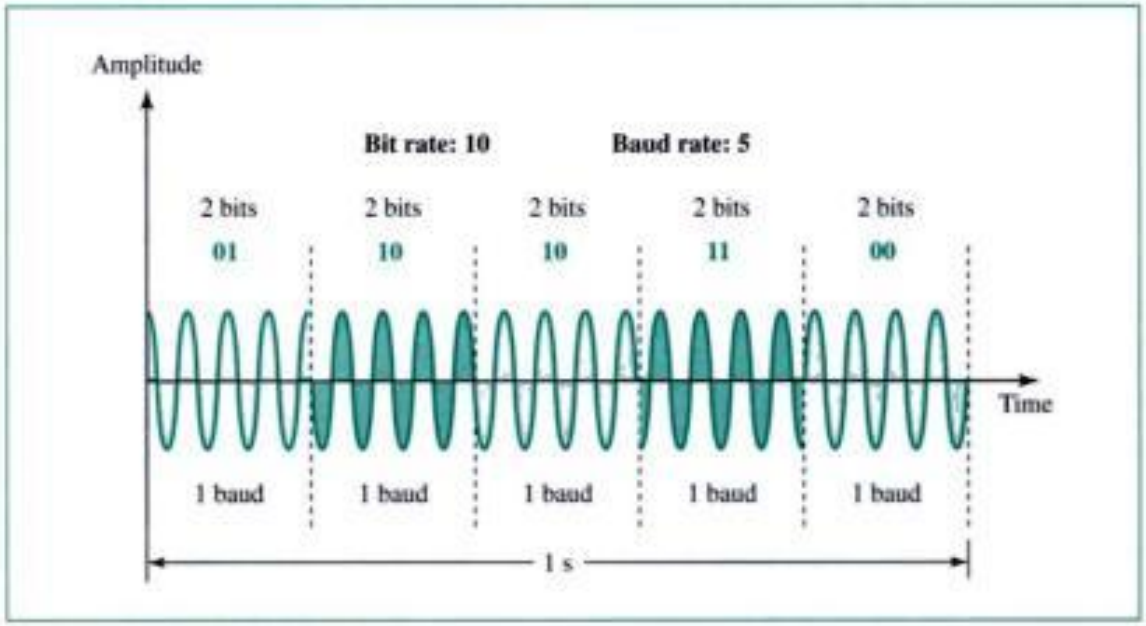

The constellation diagram for the signal in Figure 5.10 is given in Figure 5.11. A phase of 0° now represents 00; 90° represents 01; 180° represents 10; and 270° represents 11. This technique is called 4-PSK or Q-PSK. The pair of bits represented by each phase is called a **dibit.** We can transmit data twice as efficiently using 4-PSK as we can using 2-PSK.

Figure 5.11 *The 4-PSK characteristics*

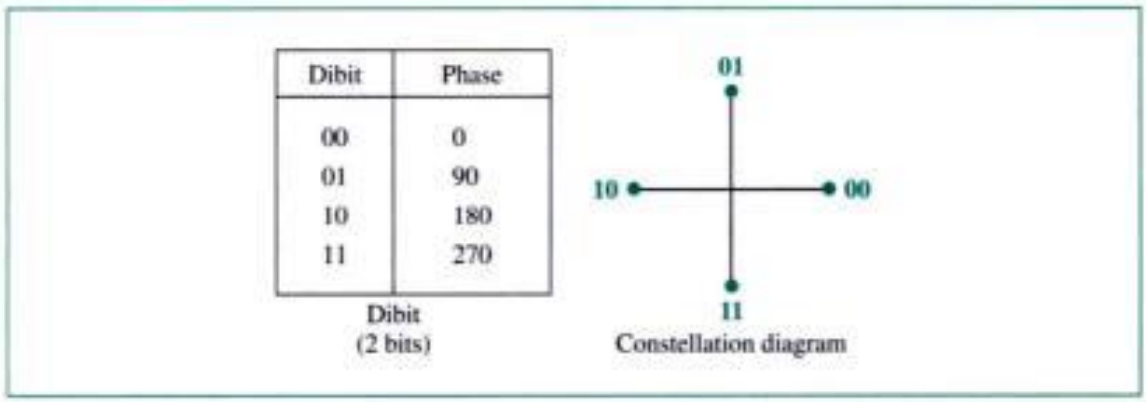

Dibit	Phase
00	0
01	90
10	180
11	270

Dibit
(2 bits)

Constellation diagram

We can extend this idea to 8-PSK. Instead of 90°, we now vary the signal by shifts of 45°. With eight different phases, each shift can represent 3 bits (1 **tribit**) at a time. (As you can see, the relationship of number of bits per shift to number of phases is a power of 2. When we have four possible phases, we can send 2 bits at a time—2^2 equals 4. When we have eight possible phases, we can send 3 bits at a time—2^3 equals 8).

Copyrighted material

Figure 5.12 shows the relationships between the phase shifts and the tribits each one represents: 8-PSK is 3 times as efficient as 2-PSK.

Figure 5.12 *The 8-PSK characteristics*

Tribit	Phase
000	0
001	45
010	90
011	135
100	180
101	225
110	270
111	315

Tribits
(3 bits)

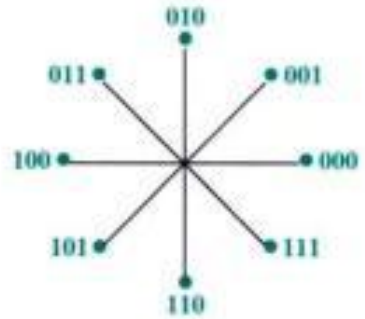

Constellation diagram

Bandwidth for PSK

The minimum bandwidth required for PSK transmission is the same as that required for ASK transmission—and for the same reasons (see Fig. 5.13). As we have seen, the maximum bit rate in PSK transmission, however, is potentially much greater than that of ASK. So while the maximum baud rates of ASK and PSK are the same for a given bandwidth, PSK bit rates using the same bandwidth can be 2 or more times greater.

Figure 5.13 *Relationship between baud rate and bandwidth in PSK*

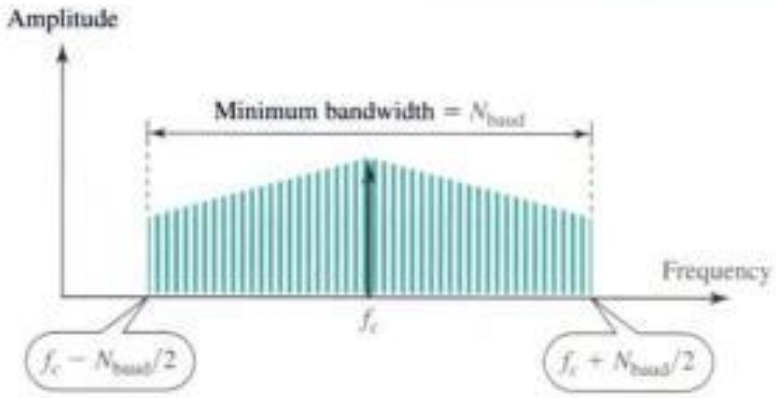

Example 8

Find the bandwidth for a 4-PSK signal transmitting at 2000 bps. Transmission is in half-duplex mode.

Solution

For 4-PSK the baud rate is one-half of the bit rate. The baud rate is therefore 1000. A PSK signal requires a bandwidth equal to its baud rate. Therefore, the bandwidth is 1000 Hz.

Copyrighted material

Example 9

Given a bandwidth of 5000 Hz for an 8-PSK signal, what are the baud rate and bit rate?

Solution

For PSK the baud rate is the same as the bandwidth, which means the baud rate is 5000. But in 8-PSK the bit rate is 3 times the baud rate, so the bit rate is 15,000 bps.

Quadrature Amplitude Modulation (QAM)

PSK is limited by the ability of the equipment to distinguish small differences in phase. This factor limits its potential bit rate.

So far, we have been altering only one of the three characteristics of a sine wave at a time, but what if we alter two? Bandwidth limitations make combinations of FSK with other changes practically useless. But why not combine ASK and PSK? Then we could have x variations in phase and y variations in amplitude, giving us x times y possible variations and the corresponding number of bits per variation. **Quadrature amplitude modulation (QAM)** does just that.

Quadrature amplitude modulation is a combination of ASK and PSK so that a maximum contrast between each signal unit (bit, dibit, tribit, and so on) is achieved.

Possible variations of QAM are numerous. Theoretically, any measurable number of changes in amplitude can be combined with any measurable number of changes in phase. Figure 5.14 shows two possible configurations, 4-QAM and 8-QAM. In both cases, the number of amplitude shifts is fewer than the number of phase shifts. Because amplitude changes are susceptible to noise and require greater shift differences than do phase changes, the number of phase shifts used by a QAM system is always larger than the number of amplitude shifts. The time-domain plot corresponding to the 8-QAM signal in Figure 5.14 is shown in Figure 5.15.

Figure 5.14 *The 4-QAM and 8-QAM constellations*

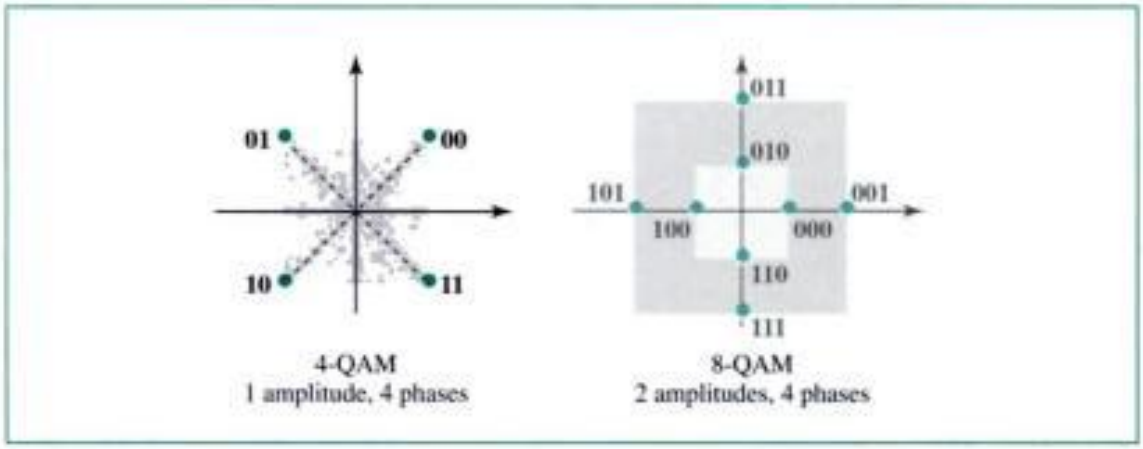

Other geometric relationships are also possible. Three popular 16-QAM configurations are shown in Figure 5.16. The first example, 3 amplitudes and 12 phases, handles noise best because of a greater ratio of phase shift to amplitude. It is the ITU-T

Copyrighted material

Figure 5.15 *Time domain for an 8-QAM signal*

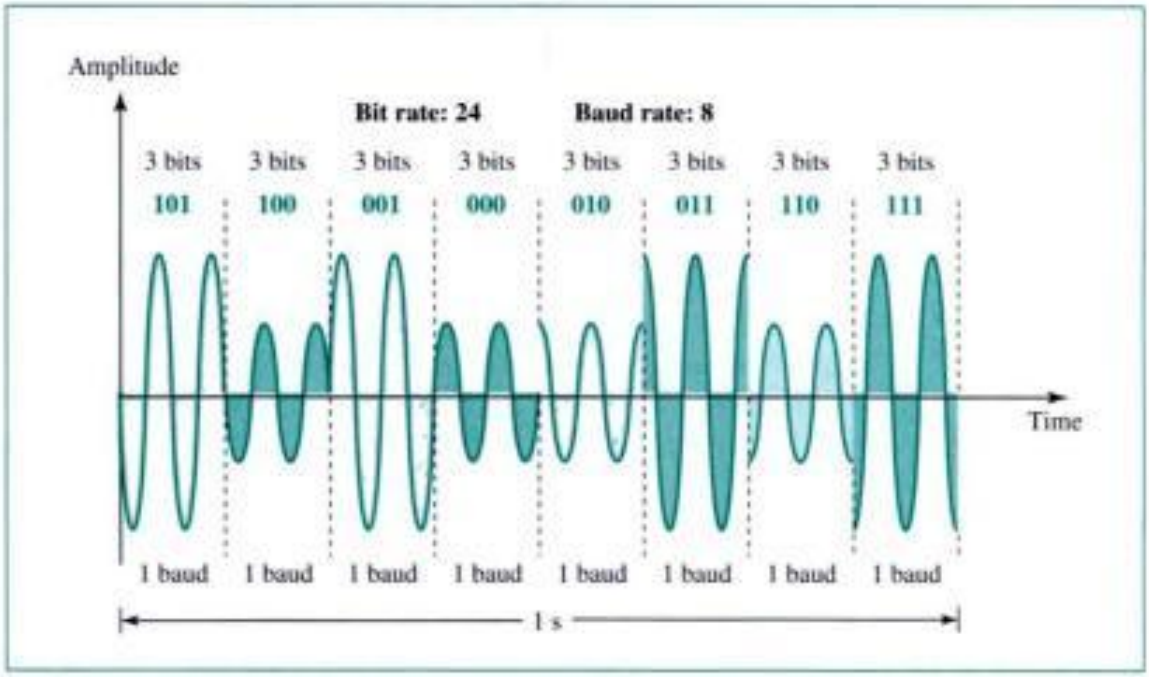

Figure 5.16 *16-QAM constellations*

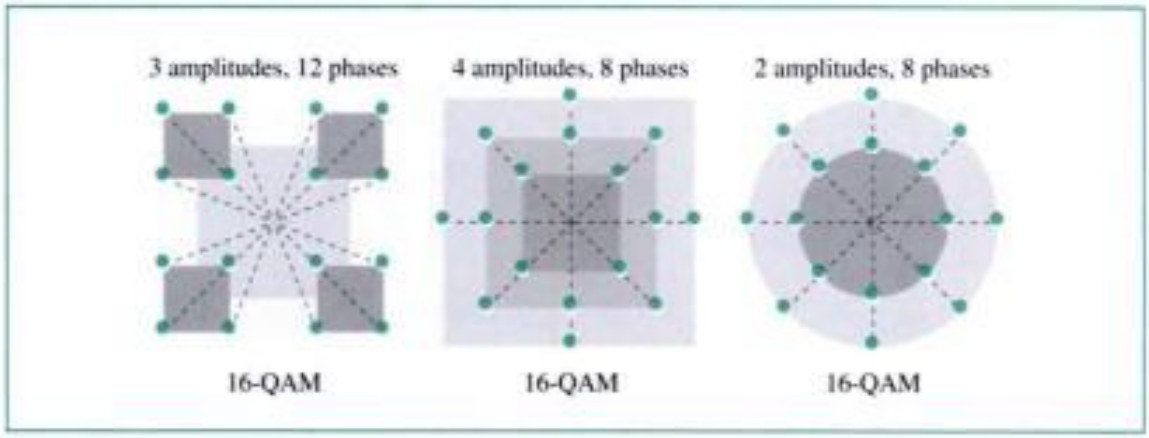

recommendation. The second example, four amplitudes and eight phases, is the OSI recommendation. If you examine the graph carefully, you will notice that not every intersection of phase and amplitude is utilized. In fact, 4 times 8 should allow for 32 possible variations. But by using only one-half of those possibilities, the measurable differences between shifts are increased and greater signal readability is ensured. In addition, several QAM designs link specific amplitudes with specific phases. This means that even with the noise problems associated with amplitude shifting, the meaning of a shift can be recovered from phase information. In general, therefore, a second advantage of QAM over ASK is its lower susceptibility to noise.

Bandwidth for QAM

The minimum bandwidth required for QAM transmission is the same as that required for ASK and PSK transmission. QAM has the same advantages as PSK over ASK.

Copyrighted material

Bit/Baud Comparison

Assuming that an FSK signal over voice-grade phone lines can send 1200 bps, the bit rate is 1200 bps. Each frequency shift represents a single bit; so it requires 1200 signal units to send 1200 bits. Its baud rate, therefore, is also 1200 bps. Each signal variation in an 8-QAM system, however, represents 3 bits. So a bit rate of 1200 bps, using 8-QAM, has a baud rate of only 400. As Figure 5.17 shows, a dibit system has a baud rate of one-half the bit rate, a tribit system has a baud rate of one-third the bit rate, and a **quadbit** system has a baud rate of one-fourth the bit rate.

Figure 5.17 *Bit and baud*

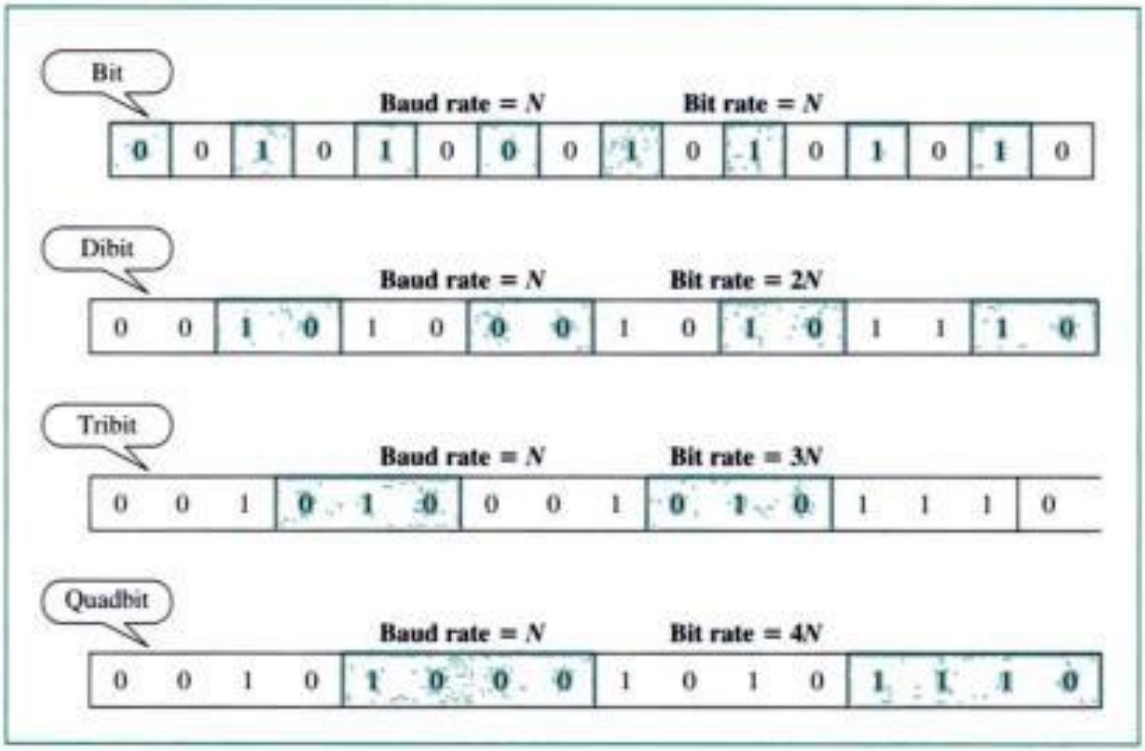

Table 5.1 shows the comparative bit and baud rates for the various methods of digital-to-analog modulation.

Table 5.1 *Bit and baud rate comparison*

Modulation	*Units*	*Bits/Baud*	*Baud Rate*	*Bit Rate*
ASK, FSK, 2-PSK	Bit	1	*N*	*N*
4-PSK, 4-QAM	Dibit	2	*N*	2*N*
8-PSK, 8-QAM	Tribit	3	*N*	3*N*
16-QAM	Quadbit	4	*N*	4*N*
32-QAM	Pentabit	5	*N*	5*N*
64-QAM	Hexabit	6	*N*	6*N*
128-QAM	Septabit	7	*N*	7*N*
256-QAM	Octabit	8	*N*	8*N*

Copyrighted material

Example 10

A constellation diagram consists of eight equally spaced points on a circle. If the bit rate is 4800 bps, what is the baud rate?

Solution

The constellation indicates 8-PSK with the points 45° apart. Since $2^3 = 8$, 3 bits are transmitted with each signal unit. Therefore, the baud rate is

$$\frac{4800}{3} = 1600 \text{ baud}$$

Example 11

Compute the bit rate for a 1000-baud 16-QAM signal.

Solution

A 16-QAM signal has 4 bits per signal unit since $\log_2 16 = 4$. Thus,

$$(1000)(4) = 4000 \text{ bps}$$

Example 12

Compute the baud rate for a 72,000-bps 64-QAM signal.

Solution

A 64-QAM signal has 6 bits per signal unit since $\log_2 64 = 6$. Thus,

$$\frac{72{,}000}{6} = 12{,}000 \text{ baud}$$

5.2 TELEPHONE MODEMS

Traditional telephone lines can carry frequencies between 300 and 3300 Hz, giving them a bandwidth of 3000 Hz. All this range is used for transmitting voice, where a great deal of interference and distortion can be accepted without loss of intelligibility. As we have seen, however, data signals require a higher degree of accuracy to ensure integrity. For safety's sake, therefore, the edges of this range are not used for data communications. In general, we can say that the signal bandwidth must be smaller than the cable bandwidth. The effective bandwidth of a telephone line being used for data transmission is 2400 Hz, covering the range from 600 to 3000 Hz. Note that today some telephone lines are capable of handling more bandwidth than traditional lines. However, modem design is still based on traditional capability (see Fig. 5.18).

A telephone line has a bandwidth of almost 2400 Hz for data transmission.

This bandwidth defines a baseband nature, which means we need to modulate if we want to use this bandwidth for data transmission. Devices that were traditionally used to do so are called modems.

The term **modem** is a composite word that refers to the two functional entities that make up the device: a signal *mo*dulator and a signal *dem*odulator. A **modulator**

Copyrighted material

Figure 5.18 *Telephone line bandwidth*

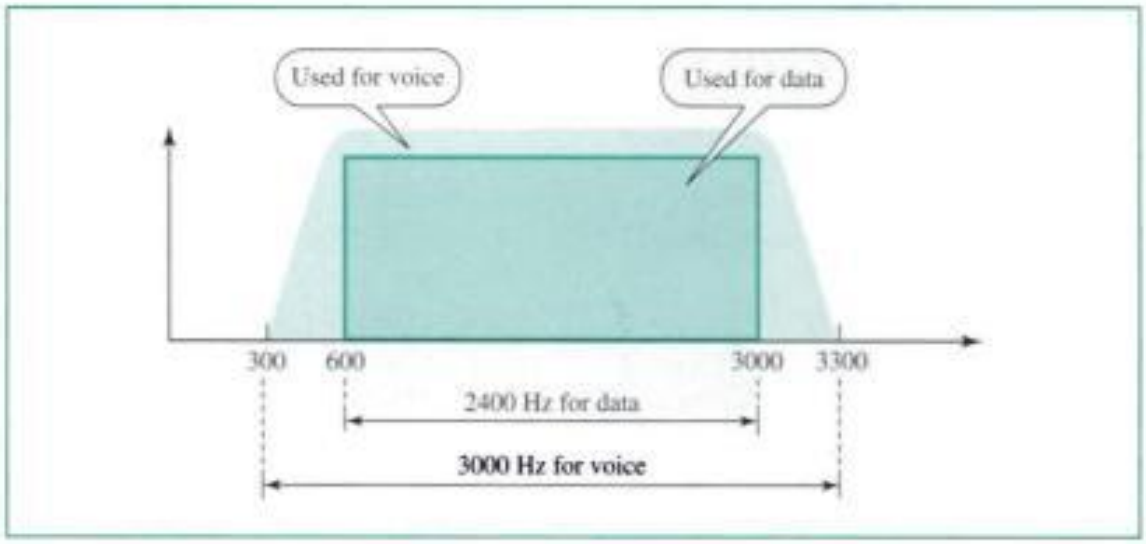

creates a band-pass analog signal from binary data. A **demodulator** recovers the binary data from the modulated signal.

***Modem* stands for modulator/demodulator.**

Figure 5.19 shows the relationship of modems to a communications link. The computer on the left sends binary data to the modulator portion of the modem; the data is sent as an analog signal on the telephone lines. The modem on the right receives the analog signal, demodulates it through its demodulator, and delivers data to the computer on the right. The communication can be bidirectional, which means the computer on the right can also send data to the computer on the left using the same modulation/demodulation processes.

Figure 5.19 *Modulation/demodulation*

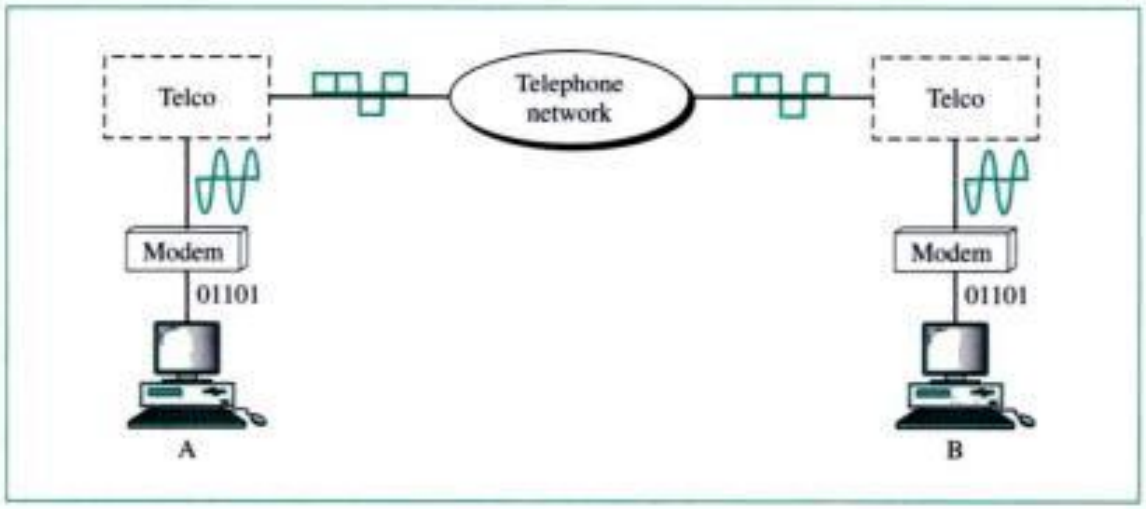

Copyrighted material

Modem Standards

Today, many of the most popular modems available are based on the **V-series** standards published by the ITU-T. We discuss just the most recent series.

V.32

The **V.32** modem uses a combined modulation and encoding technique called **trellis-coded modulation.** Trellis is essentially QAM plus a redundant bit. The data stream is divided into 4-bit sections. Instead of a quadbit, however, a pentabit (5-bit pattern) is transmitted. The value of the extra bit is calculated from the values of the data bits.

In any QAM system, the receiver compares each received signal point to all valid points in the constellation and selects the closest point as the intended value. A signal distorted by transmission noise can arrive closer in value to an adjacent point than to the intended point, resulting in a misidentification of the point and an error in the received data. The closer the points are in the constellation, the more likely it is that transmission noise can result in a signal's being misidentified. By adding a redundant bit to each quadbit, trellis-coded modulation increases the amount of information used to identify each bit pattern and thereby reduces the number of possible matches. For this reason, a trellis-encoded signal is much less likely than a plain QAM signal to be misread when distorted by noise.

The V.32 calls for 32-QAM with a baud rate of 2400. Because only 4 bits of each pentabit represents data, the resulting speed is $4 \times 2400 = 9600$ bps. The constellation diagram and bandwidth are shown in Figure 5.20.

Figure 5.20 *The V.32 constellation and bandwidth*

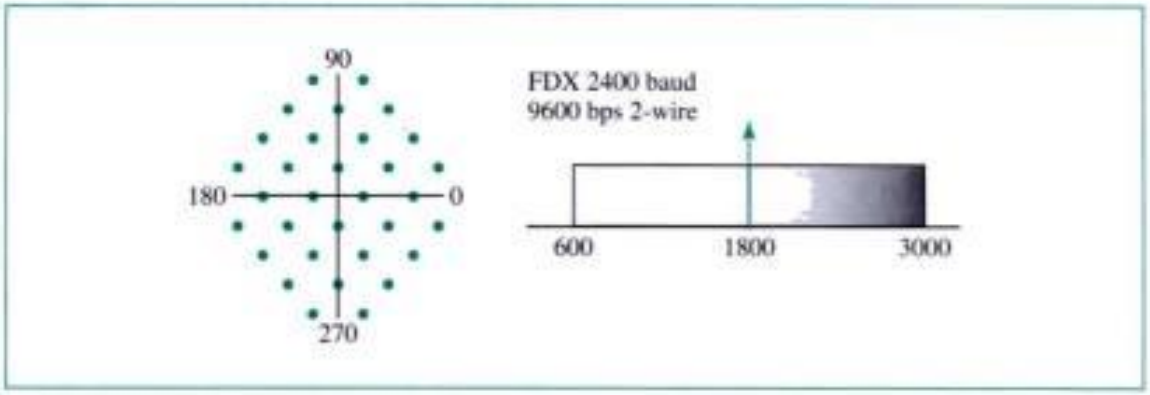

V.32bis

The **V.32bis** modem was the first of the ITU-T standards to support 14,400-bps transmission. The V.32bis uses 128-QAM transmission (7 bits/baud with 1 bit for error control) at a rate of 2400 baud ($2400 \times 6 = 14{,}400$ bps).

An additional enhancement provided by V.32bis is the inclusion of an automatic fall-back and fall-forward feature that enables the modem to adjust its speed upward or

Copyrighted material

downward depending on the quality of the line or signal. The constellation diagram and bandwidth are shown in Figure 5.21.

Figure 5.21 *The V.32bis constellation and bandwidth*

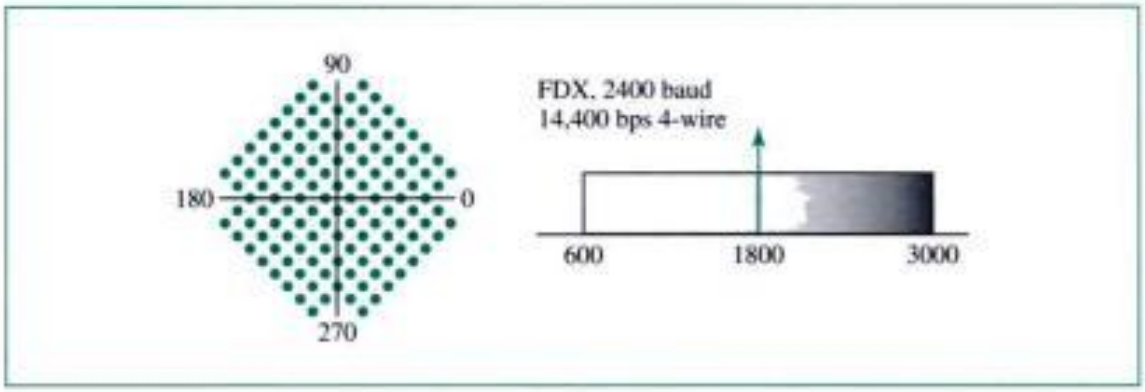

V.34bis

The **V.34bis** modem provides a bit rate of 28,800 with a 960-point constellation to a bit rate of 33,600 with a 1664-point constellation.

V.90

Traditional modems have a limitation on the data rate (maximum of 33.6 Kbps), as determined by the Shannon formula (see Chapter 3). However, **V.90** modems with a bit rate of 56,000 bps, called **56K modems,** are available. These modems may be used only if one party is using digital signaling (such as through an Internet provider). They are asymmetric in that the downloading rate (flow of data from the Internet provider to the PC) is a maximum of 56 Kbps, while the uploading rate (flow of data from the PC to the Internet provider) can be a maximum of 33.6 Kbps. Do these modems violate the Shannon capacity principle? No, the approach is different. Let us compare the two approaches.

Traditional Modems In traditional modems data exchange is between two computers, A and B, through the digital telephone network, as shown in Figure 5.22.

After modulation by the modem, an analog signal reaches the telephone company switching station, where it is sampled and digitized to be passed through the digital network. The quantization noise introduced into the signal at the sampling point limits the data rate according to the Shannon capacity. This limit is 33.6 Kbps.

Because the sampling point exists in both directions, the maximum data rate is 33.6 Kbps.

56K Modems Communication today is via the Internet. We still use modems to upload data to the Internet and download data from the Internet, as shown in Figure 5.23.

In **uploading,** the analog signal must still be sampled at the switching station, which means the data rate in uploading is limited to 33.6 Kbps. However, there is

Copyrighted material

Figure 5.22 *Traditional modems*

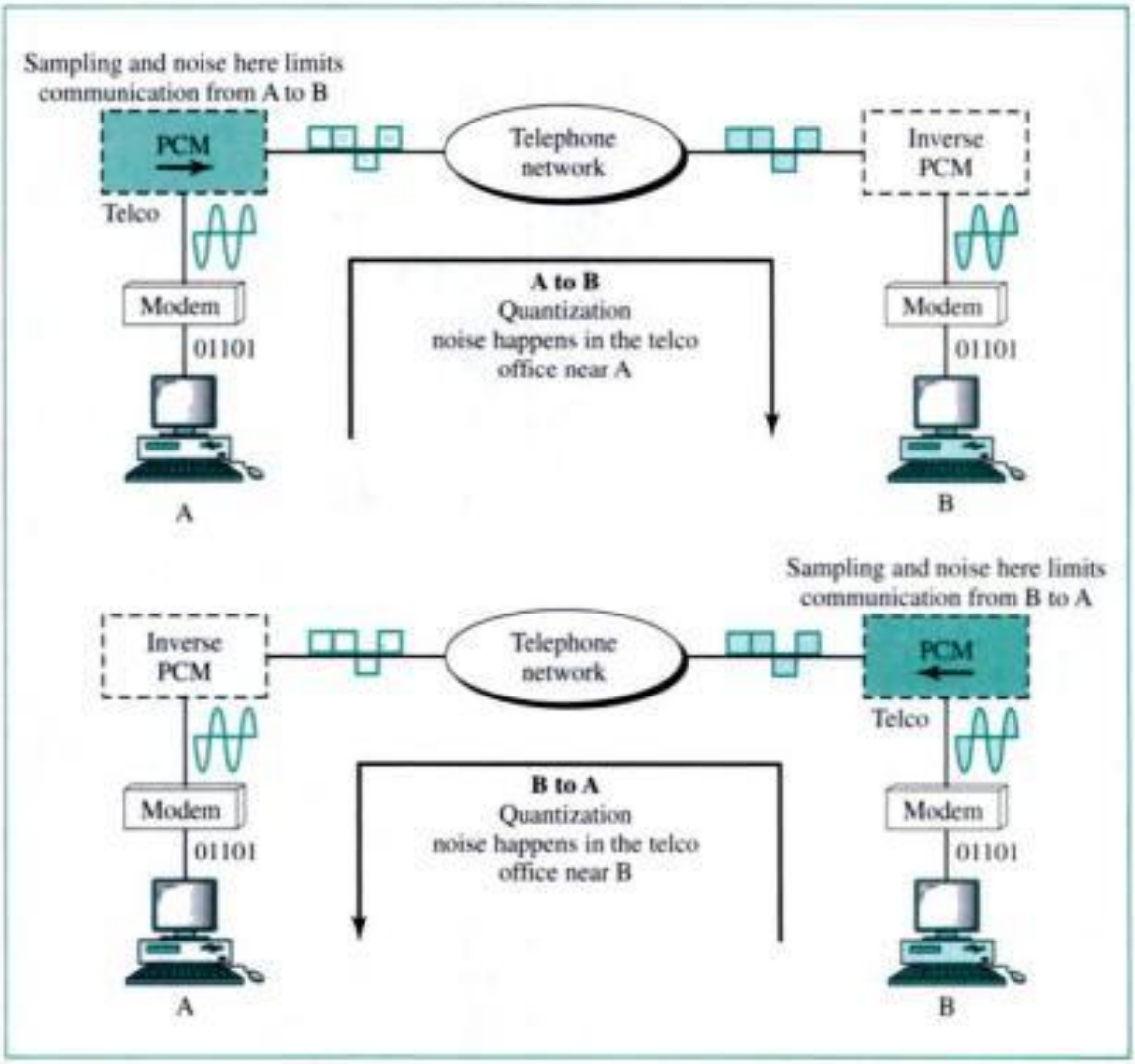

no sampling in the **downloading.** The signal is not affected by quantization noise and not subject to the Shannon capacity limitation. The maximum data rate in the uploading direction is still 33.6 Kbps, but the data rate in the downloading direction is now 56 Kbps.

One may wonder why 56 Kbps. The telephone companies sample 8000 times per second with 8 bits per sample. One of the bits in each sample is used for control purposes, which means each sample is 7 bits. The rate is therefore 8000×7, or 56,000, bps or 56 Kbps.

V.92

The standard above V.90 is called **V.92.** These modems can adjust their speed, and if the noise allows, they can upload data at the rate of 48 Kbps. The downloading rate is still 56 Kbps. The modem has additional features. For example, the modem can interrupt the Internet connection when there is an incoming call if the line has call-waiting service.

Copyrighted material

Figure 5.23 *56K modems*

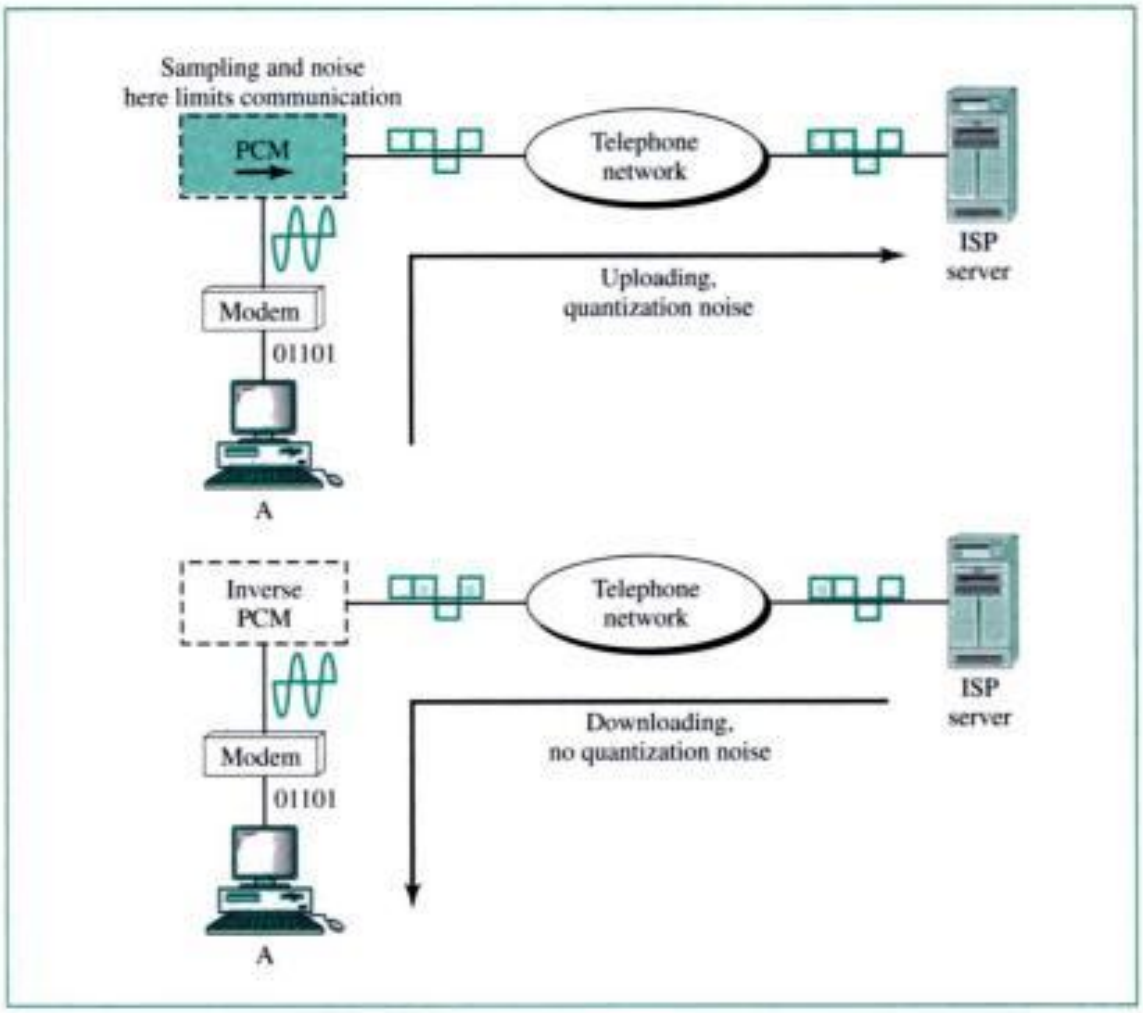

5.3 MODULATION OF ANALOG SIGNALS

Modulation of an analog signal or analog-to-analog conversion is the representation of analog information by an analog signal. One may ask why we need to modulate an analog signal; it is already analog. Modulation is needed if the medium has a band-pass nature or if only band-pass bandwidth is available to us. An example is radio. The government assigns a baseband bandwidth to each radio station. The analog signal produced by each station is a low-pass signal, all in the same range. To be able to listen to different stations, the low-pass signals need to be shifted, each to a different range.

Figure 5.24 shows the relationship between the analog information, the analog-to-analog conversion hardware, and the resultant analog signal.

Analog-to-analog modulation can be accomplished in three ways: **amplitude modulation (AM), frequency modulation (FM),** and **phase modulation (PM).** See Figure 5.25.

Copyrighted material

Figure 5.24 *Analog-to-analog modulation*

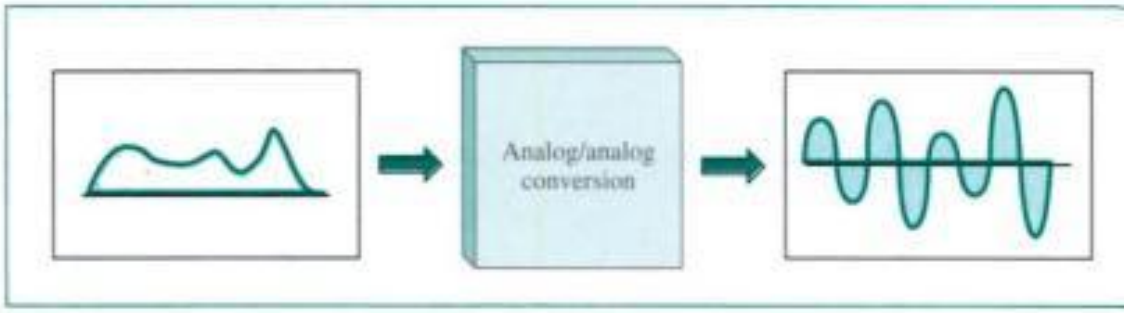

Figure 5.25 *Types of analog-to-analog modulation*

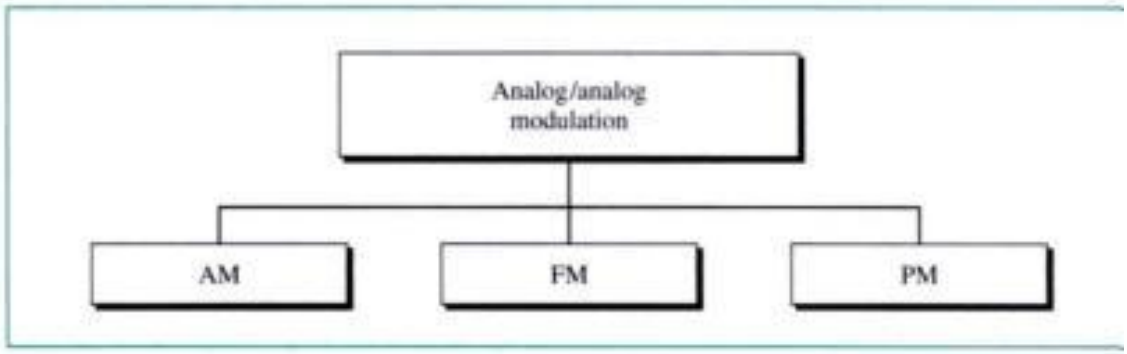

Amplitude Modulation (AM)

In AM transmission, the carrier signal is modulated so that its amplitude varies with th changing amplitudes of the modulating signal. The frequency and phase of the carrie remain the same; only the amplitude changes to follow variations in the informatio Figure 5.26 shows how this concept works. The modulating signal becomes an envelop to the carrier.

AM Bandwidth

The bandwidth of an AM signal is equal to twice the bandwidth of the modulating sig nal and covers a range centered on the carrier frequency (see Fig. 5.27). The shade portion of the graph is the frequency spectrum of the signal.

The bandwidth of an audio signal (speech and music) is usually 5 KHz. Therefor an AM radio station needs a minimum bandwidth of 10 KHz. In fact, the Federal Com munications Commission (FCC) allows 10 KHz for each AM station.

AM stations are allowed carrier frequencies anywhere between 530 and 1700 KH (1.7 MHz). However, each station's carrier frequency must be separated from those o either side of it by at least 10 KHz (one AM bandwidth) to avoid interference. If on station uses a carrier frequency of 1100 KHz, the next station's carrier frequency ca not be lower than 1110 KHz (see Fig. 5.28).

The total bandwidth required for AM can be determined from the bandwidth of the audio signal: $BW_t = 2 \times BW_m$.

Copyrighted material

Figure 5.26 *Amplitude modulation*

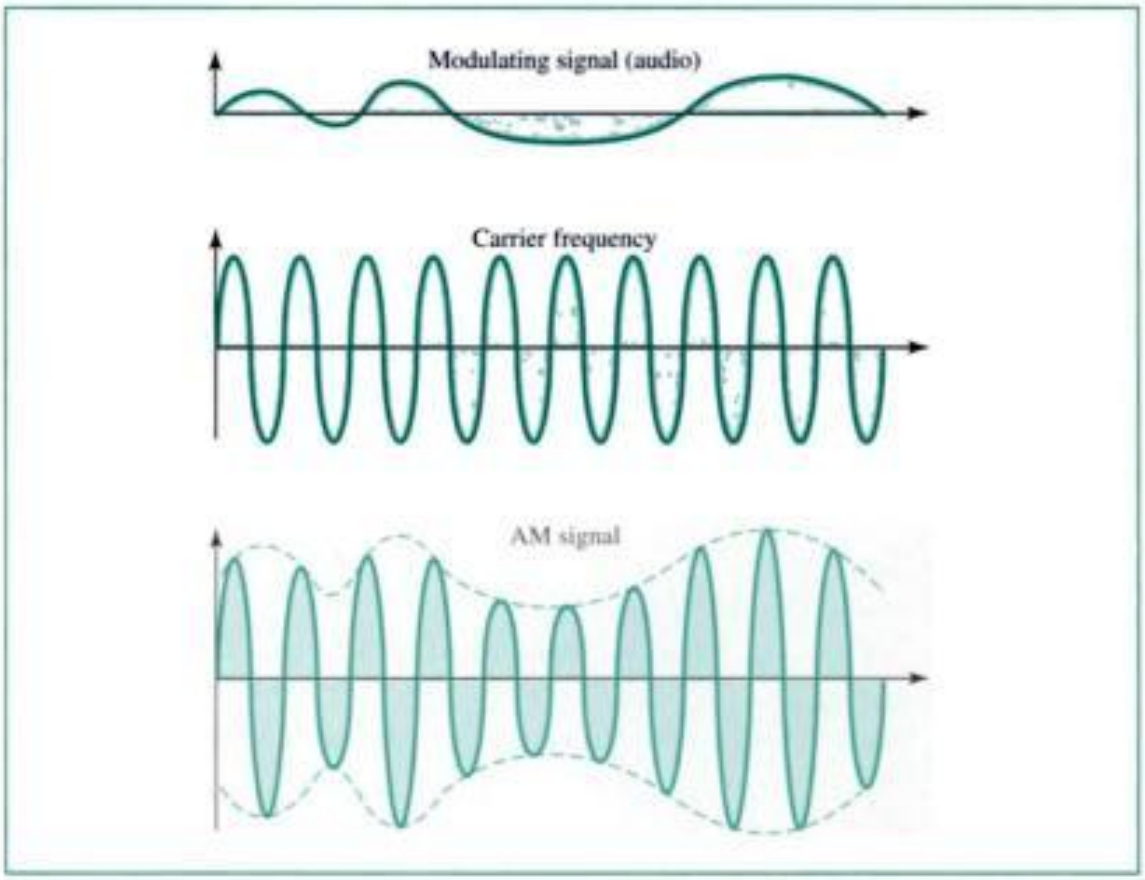

Figure 5.27 *AM bandwidth*

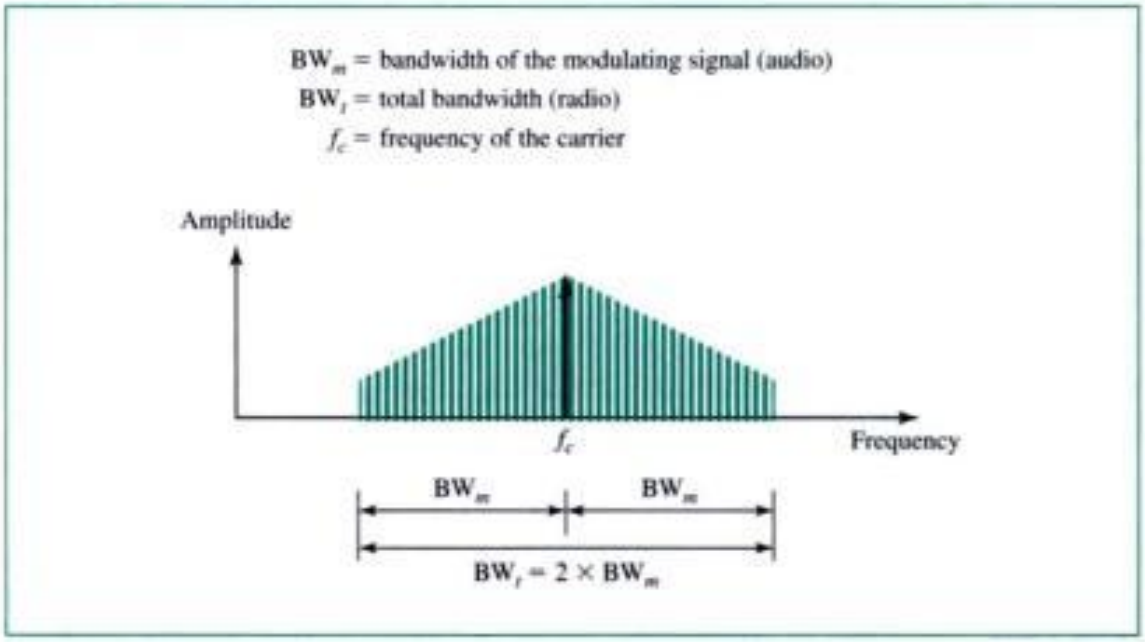

Copyrighted material

Figure 5.28 *AM band allocation*

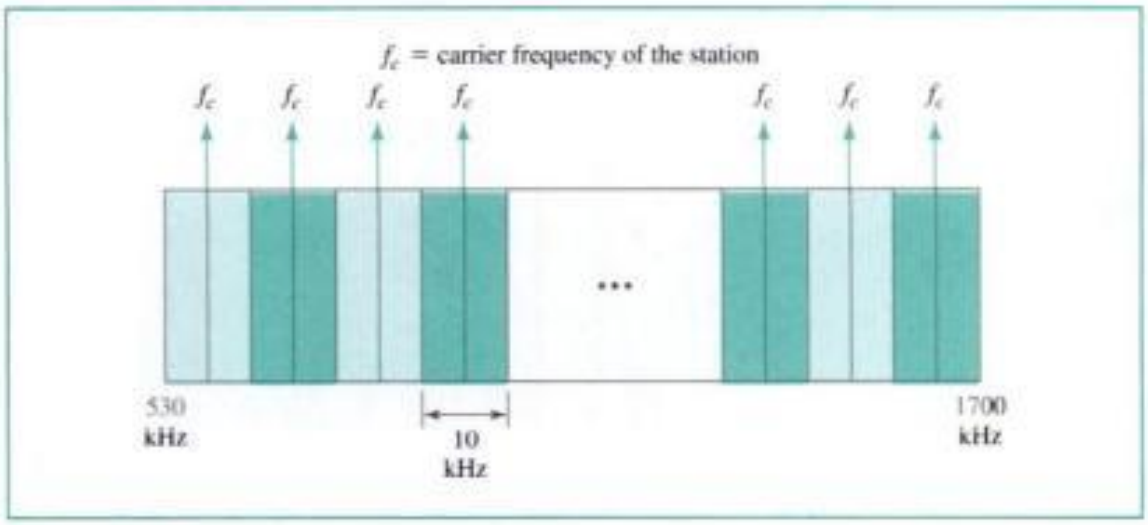

Example 13

We have an audio signal with a bandwidth of 4 KHz. What is the bandwidth needed if we modulate the signal using AM? Ignore FCC regulations.

Solution

An AM signal requires twice the bandwidth of the original signal:

$$BW = 2 \times 4 \text{ KHz} = 8 \text{ KHz}$$

Frequency Modulation (FM)

In FM transmission, the frequency of the carrier signal is modulated to follow the changing voltage level (amplitude) of the modulating signal. The peak amplitude and phase of the carrier signal remain constant, but as the amplitude of the information signal changes, the frequency of the carrier changes correspondingly. Figure 5.29 shows the relationships of the modulating signal, the carrier signal, and the resultant FM signal.

FM Bandwidth

The bandwidth of an FM signal is equal to 10 times the bandwidth of the modulating signal and, like AM bandwidths, covers a range centered on the carrier frequency. Figure 5.30 shows both the bandwidth and, in the shaded portion, the frequency spectrum of an FM signal.

The bandwidth of an audio signal (speech and music) broadcast in stereo is almost 15 KHz. Each FM radio station, therefore, needs a minimum bandwidth of 150 KHz. The FCC allows 200 KHz (0.2 MHz) for each station to provide some room for guard bands.

FM stations are allowed carrier frequencies anywhere between 88 and 108 MHz. Stations must be separated by at least 200 KHz to keep their bandwidths from overlapping. To create even more privacy, the FCC requires that in a given area, only alternate bandwidth allocations may be used. The others remain unused to prevent any possibility

The total bandwidth required for FM can be determined from the bandwidth of the audio signal: $BW_t = 10 \times BW_m$.

Copyrighted material

Figure 5.29 *Frequency modulation*

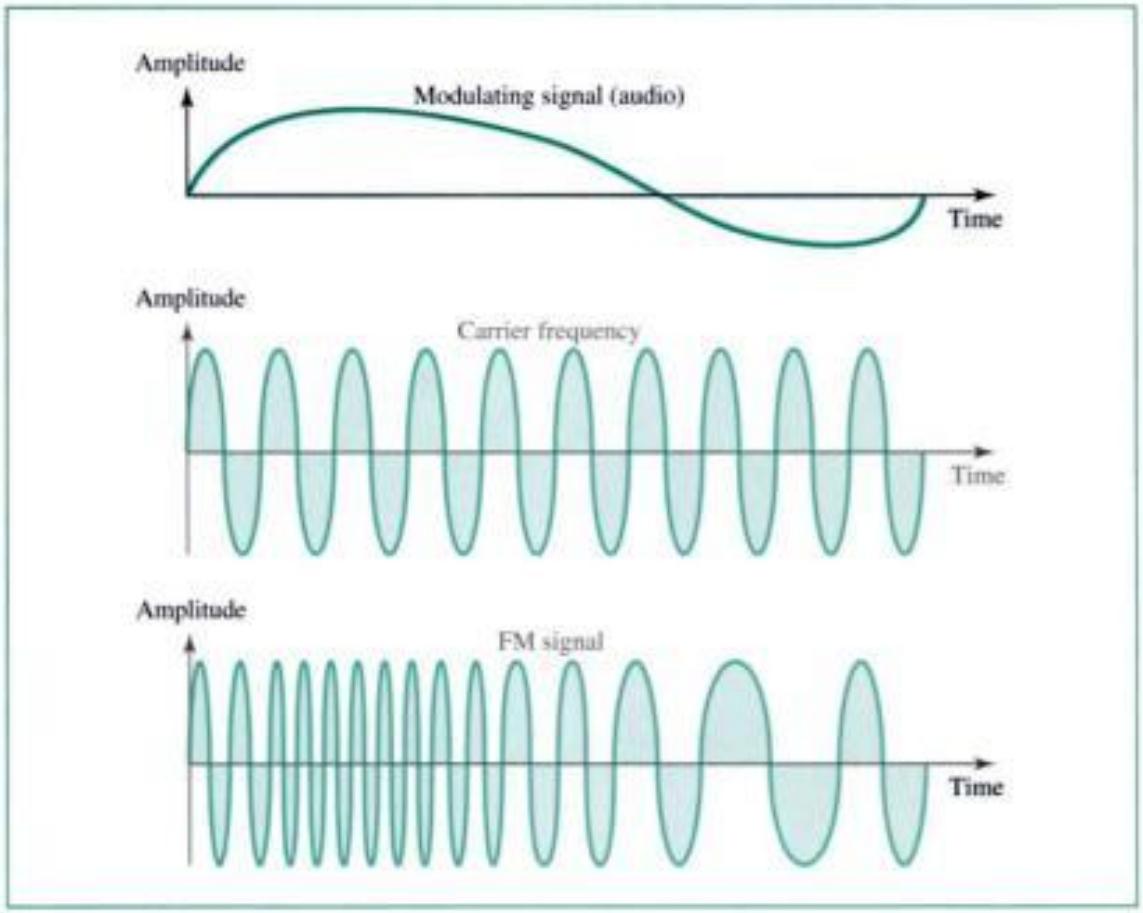

Figure 5.30 *FM bandwidth*

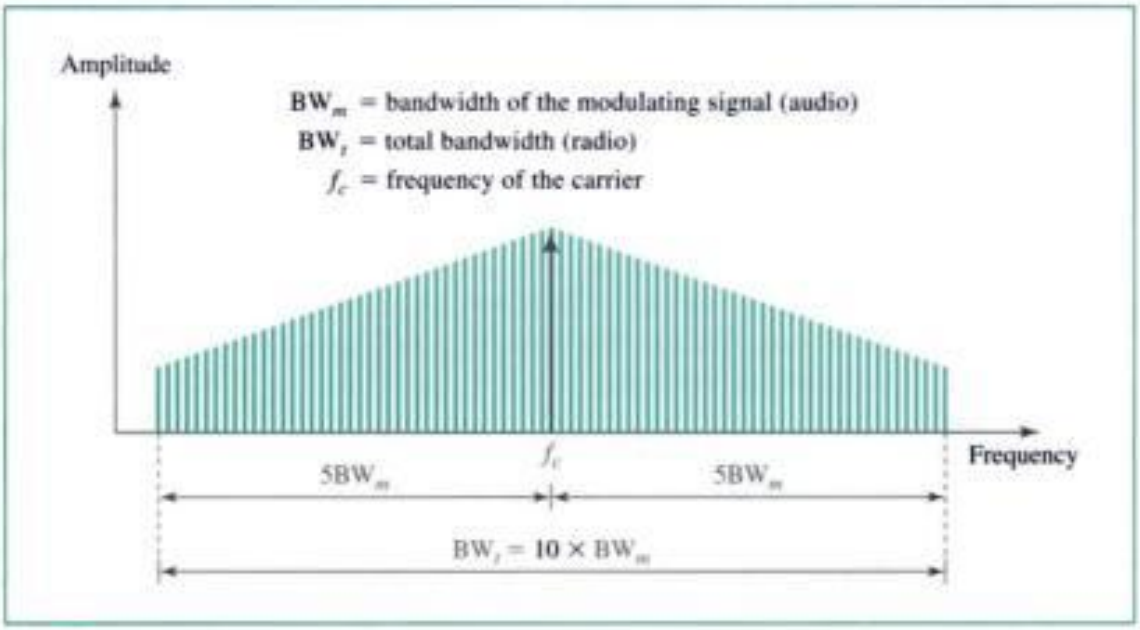

Copyrighted material

The bandwidth of a stereo audio signal is usually 15 KHz. Therefore, an FM station needs at least a bandwidth of 150 KHz. The FCC requires the minimum bandwidth to be at least 200 KHz (0.2 MHz).

of two stations interfering with each other. Given 88 to 108 MHz as a range, there are 100 potential FM bandwidths in an area, of which 50 can operate at any one time. Figure 5.31 illustrates this concept.

Figure 5.31 *FM band allocation*

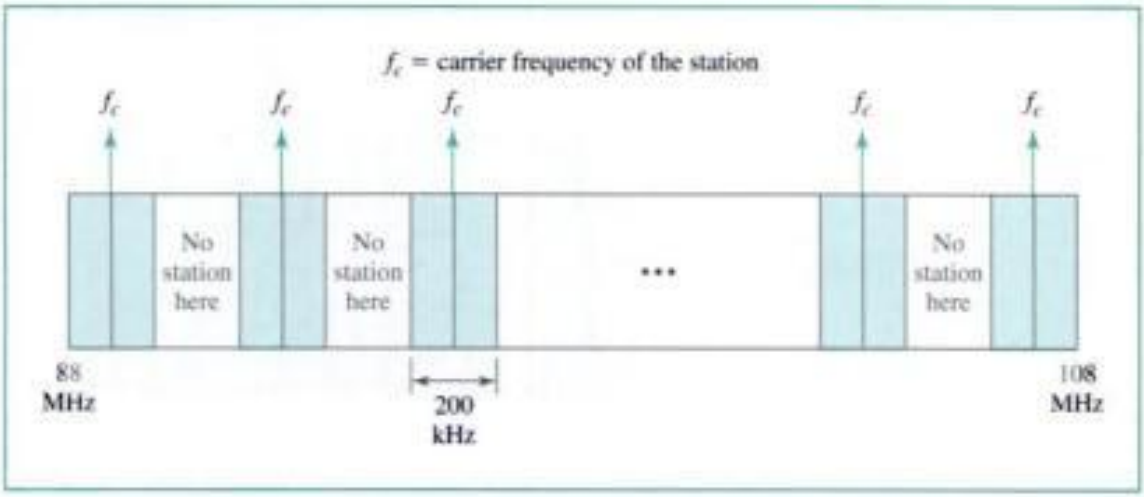

Example 14

We have an audio signal with a bandwidth of 4 MHz. What is the bandwidth needed if we modulate the signal using FM? Ignore FCC regulations.

Solution

An FM signal requires 10 times the bandwidth of the original signal:

$$BW = 10 \times 4 \text{ MHz} = 40 \text{ MHz}$$

Phase Modulation (PM)

Due to simpler hardware requirements, phase modulation (PM) is used in some systems as an alternative to frequency modulation. In PM transmission, the phase of the carrier signal is modulated to follow the changing voltage level (amplitude) of the modulating signal. The peak amplitude and frequency of the carrier signal remain constant, but as the amplitude of the information signal changes, the phase of the carrier changes correspondingly. The analysis and the final result (modulated signal) are similar to those of frequency modulation.

5.4 KEY TERMS

56K modem
amplitude modulation (AM)
amplitude shift keying (ASK)
analog-to-analog modulation
bit rate
baud rate

Copyrighted material

carrier signal
constellation
demodulation
demodulator
dibit
digital-to-analog modulation
downloading
frequency modulation (FM)
frequency shift keying (FSK)
modem
modulation
modulator
phase modulation (PM)
phase shift keying (PSK)
quadbit
quadrature amplitude modulation (QAM)
trellis-coded modulation
tribit
uploading
V series
V.32
V.32bis
V.34bis
V.90
V.92

5.5 SUMMARY

- Digital-to-analog modulation can be accomplished using the following:
  Amplitude shift keying (ASK)—the amplitude of the carrier signal varies.
  Frequency shift keying (FSK)—the frequency of the carrier signal varies.
  Phase shift keying (PSK)—the phase of the carrier signal varies.
  Quadrature amplitude modulation (QAM)—both the phase and amplitude of the carrier signal vary.
- QAM enables a higher data transmission rate than other digital-to-analog methods.
- Baud rate and bit rate are not synonymous. Bit rate is the number of bits transmitted per second. Baud rate is the number of signal units transmitted per second. One signal unit can represent one or more bits.
- The minimum required bandwidth for ASK and PSK is the baud rate.
- The minimum required bandwidth (BW) for FSK modulation is $BW = f_{c1} - f_{c0} + N_{baud}$, where f_{c1} is the frequency representing a 1 bit, f_{c0} is the frequency representing a 0 bit, and N_{baud} is the baud rate.
- A regular telephone line uses frequencies between 600 and 3000 Hz for data communication.
- ASK modulation is especially susceptible to noise.
- Because it uses two carrier frequencies, FSK modulation requires more bandwidth than ASK and PSK.
- PSK and QAM modulation have two advantages over ASK:
  They are not as susceptible to noise.
  Each signal change can represent more than one bit.
- Trellis coding is a technique that uses redundancy to provide a lower error rate.
- The 56K modems are asymmetric; they download at a rate of 56 Kbps and upload at 33.6 Kbps.

Copyrighted material

- Analog-to-analog modulation can be implemented by using the following:
  Amplitude modulation (AM)
  Frequency modulation (FM)
  Phase modulation (PM)
- In AM radio, the bandwidth of the modulated signal must be twice the bandwidth of the modulating signal.
- In FM radio, the bandwidth of the modulated signal must be 10 times the bandwidth of the modulating signal.

5.6 PRACTICE SET

Review Questions

1. What is digital-to-analog modulation?
2. What is analog-to-analog modulation?
3. Why is frequency modulation superior to amplitude modulation?
4. What is the advantage of QAM over ASK or PSK?
5. What are the methods that convert a digital signal to an analog signal?
6. What is the difference between bit rate and baud rate? Give an example where both are the same. Give an example where they are different.
7. What is modulation?
8. What is the purpose of a carrier signal in modulation?
9. How is baud rate related to transmission bandwidth in ASK?
10. How is baud rate related to transmission bandwidth in FSK?
11. How is baud rate related to transmission bandwidth in PSK?
12. What kind of information can be obtained from a constellation diagram?
13. How is baud rate related to transmission bandwidth in QAM?
14. How is QAM related to ASK and PSK?
15. What is the major factor that makes PSK superior to ASK?
16. What does the term *modem* stand for?
17. What is the function of a modulator? What is the function of a demodulator?
18. Explain the asymmetry of 56K modems.
19. Why are modems needed for telephone communications?
20. The minimum bandwidth of an ASK signal could be equal to the bit rate. Explain why this is impossible for FSK.
21. How does AM differ from ASK?
22. How does FM differ from FSK?
23. Compare the FM bandwidth with the AM bandwidth in terms of the modulating signal.

Copyrighted material

Multiple-Choice Questions

24. ASK, PSK, FSK, and QAM are examples of _____ modulation.
    a. Digital-to-digital
    b. Digital-to-analog
    c. Analog-to-analog
    d. Analog-to-digital
25. AM and FM are examples of _____ modulation.
    a. Digital-to-digital
    b. Digital-to-analog
    c. Analog-to-analog
    d. Analog-to-digital
26. In QAM, both phase and _____ of a carrier frequency are varied.
    a. Amplitude
    b. Frequency
    c. Bit rate
    d. Baud rate
27. Which of the following is most affected by noise?
    a. PSK
    b. ASK
    c. FSK
    d. QAM
28. If the baud rate is 400 for a 4-PSK signal, the bit rate is _____ bps.
    a. 100
    b. 400
    c. 800
    d. 1600
29. If the bit rate for an ASK signal is 1200 bps, the baud rate is _____.
    a. 300
    b. 400
    c. 600
    d. 1200
30. If the bit rate for an FSK signal is 1200 bps, the baud rate is _____.
    a. 300
    b. 400
    c. 600
    d. 1200
31. If the bit rate for a QAM signal is 3000 bps and a signal unit is represented by a tribit, what is the baud rate?
    a. 300
    b. 400

Copyrighted material

c. 1000

d. 1200

32. If the baud rate for a QAM signal is 3000 and a signal unit is represented by a tribit, what is the bit rate?

a. 300

b. 400

c. 1000

d. 9000

33. If the baud rate for a QAM signal is 1800 and the bit rate is 9000, how many bits are there per signal unit?

a. 3

b. 4

c. 5

d. 6

34. In 16-QAM, there are 16 _____.

a. Combinations of phase and amplitude

b. Amplitudes

c. Phases

d. bps

35. Which modulation technique involves tribits, eight different phase shifts, and one amplitude?

a. FSK

b. 8-PSK

c. ASK

d. 4-PSK

36. Given an AM radio signal with a bandwidth of 10 KHz and the highest-frequency component at 705 KHz, what is the frequency of the carrier signal?

a. 700 KHz

b. 705 KHz

c. 710 KHz

d. Cannot be determined from given information

37. A modulated signal is formed by _____.

a. Changing the modulating signal by the carrier wave

b. Changing the carrier wave by the modulating signal

c. Quantization of the source data

d. Sampling at the Nyquist frequency

38. If FCC regulations are followed, the carrier frequencies of adjacent AM radio stations are _____ apart.

a. 5 KHz

b. 10 KHz

Copyrighted material

c. 200 KHz
d. 530 KHz

39. If FCC regulations are followed, _____ potential FM stations are theoretically possible in a given area.
    a. 50
    b. 100
    c. 133
    d. 150
40. When an ASK signal is decomposed, the result is _____.
    a. Always one sine wave
    b. Always two sine waves
    c. An infinite number of sine waves
    d. None of the above
41. The bandwidth of an FM signal requires 10 times the bandwidth of the _____ signal.
    a. Carrier
    b. Modulating
    c. Bipolar
    d. Sampling
42. Modulation of an analog signal can be accomplished through changing the _____ of the carrier signal.
    a. Amplitude
    b. Frequency
    c. Phase
    d. Any of the above
43. For a telephone line, the bandwidth for voice is usually _____ the bandwidth for data.
    a. Equivalent to
    b. Less than
    c. Greater than
    d. Twice
44. For a given bit rate, the minimum bandwidth for ASK is _____ the minimum bandwidth for FSK.
    a. Equivalent to
    b. Less than
    c. Greater than
    d. Twice
45. As the bit rate of an FSK signal increases, the bandwidth _____.
    a. Decreases
    b. Increases

Copyrighted material

c. Remains the same

d. Doubles

46. For FSK, as the difference between the two carrier frequencies increases, the bandwidth _____.

a. Decreases

b. Increases

c. Remains the same

d. Halves

47. Which ITU-T modem standard uses trellis coding?

a. V.32

b. V.33

c. V.34

d. (a) and (b)

48. In trellis coding the number of data bits is _____ the number of transmitted bits.

a. Equal to

b. Less than

c. More than

d. Double that of

49. What is the object of trellis coding?

a. To narrow the bandwidth

b. To simplify modulation

c. To increase the data rate

d. To reduce the error rate

50. The bit rate always equals the baud rate in which type of signal?

a. FSK

b. QAM

c. 4-PSK

d. All the above

51. A modulator converts a(n)_____ signal to a(n) _____ signal.

a. Digital; analog

b. Analog; digital

c. PSK; FSK

d. FSK; PSK

52. A 56K modem can download at a rate of _____ Kbps and upload at a rate of _____ Kbps.

a. 33.6; 33.6

b. 33.6; 56.6

c. 56.6; 33.6

d. 56.6; 56.6

Copyrighted material

Exercises

53. Calculate the baud rate for the given bit rate and type of modulation:
    a. 2000 bps, FSK
    b. 4000 bps, ASK
    c. 6000 bps, 2-PSK
    d. 6000 bps, 4-PSK
    e. 6000 bps, 8-PSK
    f. 4000 bps, 4-QAM
    g. 6000 bps, 16-QAM
    h. 36,000 bps, 64-QAM
54. Calculate the baud rate for the given bit rate and bit combination:
    a. 2000 bps, dibit
    b. 6000 bps, tribit
    c. 6000 bps, quadbit
    d. 6000 bps, bit
55. Calculate the bit rate for the given baud rate and type of modulation.
    a. 1000 baud, FSK
    b. 1000 baud, ASK
    c. 1000 baud, 8-PSK
    d. 1000 baud, 16-QAM
56. Draw the constellation diagram for the following:
    a. ASK, amplitudes of 1 and 3
    b. 2-PSK, amplitude of 1 at 0° and 180°
57. Data from a source ranges in value between −1.0 and 1.0. To what do the data points 0.91, −0.25, 0.56, and 0.71 transform if 8-bit quantization is used?
58. The data points of a constellation are at (4, 0) and (6, 0). Draw the constellation. Show the amplitude and phase for each point. Is the modulation ASK, PSK, or QAM? How many bits per baud can one send with this constellation?
59. Repeat Exercise 58 if the data points are at (4, 5) and (8, 10).
60. Repeat Exercise 58 if the data points are at (4, 0) and (–4, 0).
61. Repeat Exercise 58 if the data points are at (4, 4) and (–4, 4).
62. Repeat Exercise 58 if the data points are at (4, 0), (4, 4), (–4, 0), and (–4, –4).
63. Does the constellation in Figure 5.32 represent ASK, FSK, PSK, or QAM?

Figure 5.32 *Exercise 63*

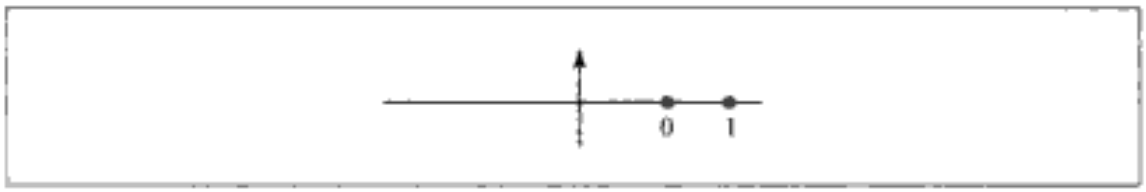

Copyrighted material

64. Does the constellation in Figure 5.33 represent ASK, FSK, PSK, or QAM?

Figure 5.33 *Exercise 64*

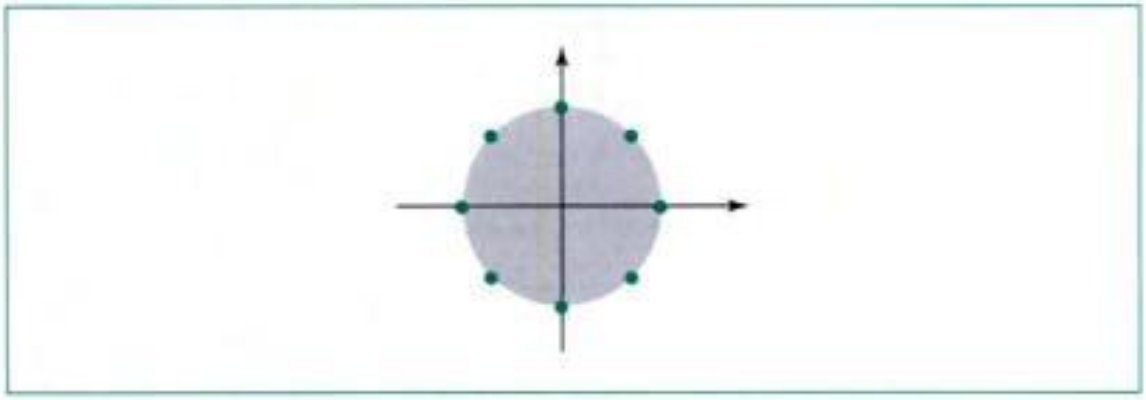

65. Does the constellation in Figure 5.34 represent ASK, FSK, PSK, or QAM?

Figure 5.34 *Exercise 65*

66. Does the constellation in Figure 5.35 represent ASK, FSK, PSK, or QAM?

Figure 5.35 *Exercise 66*

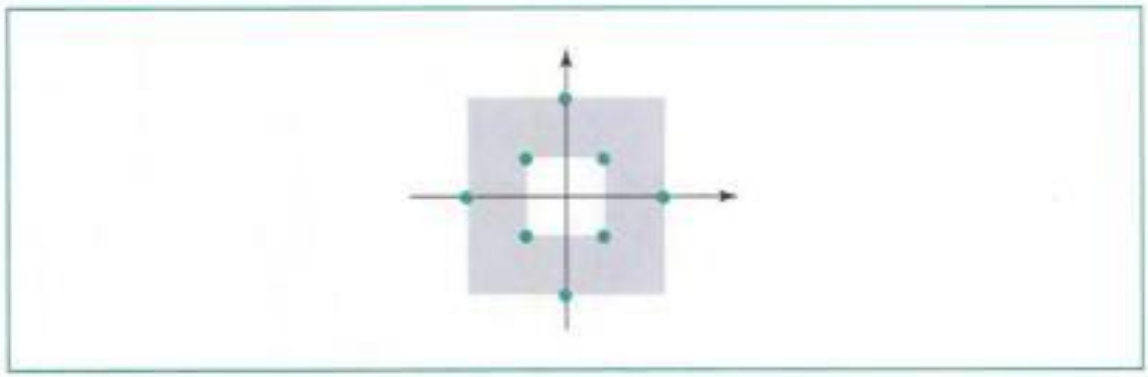

67. Can a constellation have 12 points? Why or why not?

Copyrighted material

68. Can a constellation have 18 points? Why or why not?
69. Can you define a general rule for the number of points in a constellation?
70. If the number of points in a constellation is 8, how many bits can we send per baud?
71. Calculate the bandwidth required for each of the following AM stations. Disregard FCC rules.
    a. Modulating signal with a bandwidth of 4 KHz
    b. Modulating signal with a bandwidth of 8 KHz
    c. Modulating signal with frequencies of 2000 to 3000 Hz
72. Calculate the bandwidth required for each of the following FM stations. Disregard FCC rules.
    a. Modulating signal with a bandwidth of 12 KHz
    b. Modulating signal with a bandwidth of 8 KHz
    c. Modulating signal with frequencies of 2000 to 3000 Hz

Copyrighted material

Copyrighted material

CHAPTER 6

Multiplexing

Whenever the bandwidth of a medium linking two devices is greater than the bandwidth needs of the devices, the link can be shared. **Multiplexing** is the set of techniques that allows the simultaneous transmission of multiple signals across a single data link.

As data and telecommunications usage increases, so does traffic. We can accommodate this increase by continuing to add individual lines each time a new channel is needed, or we can install higher-bandwidth links and use each to carry multiple signals. As described in Chapter 7, today's technology includes high-bandwidth media such as optical fiber and terrestrial and satellite microwaves. Each of these has a bandwidth far in excess of that needed for the average transmission signal. If the bandwidth of a link is greater than the bandwidth needs of the devices connected to it, the bandwidth is wasted. An efficient system maximizes the utilization of all resources; bandwidth is one of the most precious resources we have in data communications.

In a multiplexed system, *n* lines share the bandwidth of one **link.** Figure 6.1 shows the basic format of a multiplexed system.

Figure 6.1 *Dividing a link into channels*

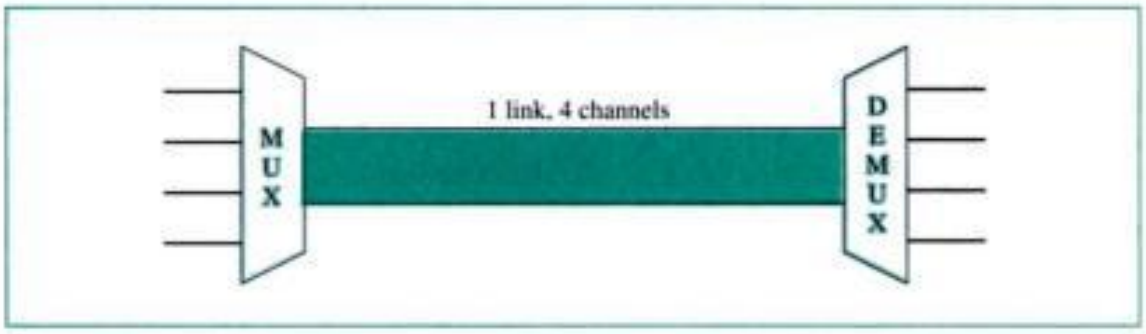

The four lines on the left direct their transmission streams to a **multiplexer (MUX),** which combines them into a single stream (many to one). At the receiving end, that stream is fed into a **demultiplexer (DEMUX),** which separates the stream back into its component transmissions (one to many) and directs them to their corresponding lines.

Copyrighted material

In Figure 6.1 the word **link** refers to the physical path. The word **channel** refers to the portion of a link that carries a transmission between a given pair of lines. One link can have many (n) channels.

Signals are multiplexed by one of three basic techniques: frequency-division multiplexing (FDM), wave-division multiplexing (WDM), and time-division multiplexing (TDM). The first two are techniques used for analog signals; the third for digital signals (see Figure 6.2).

Figure 6.2 *Categories of multiplexing*

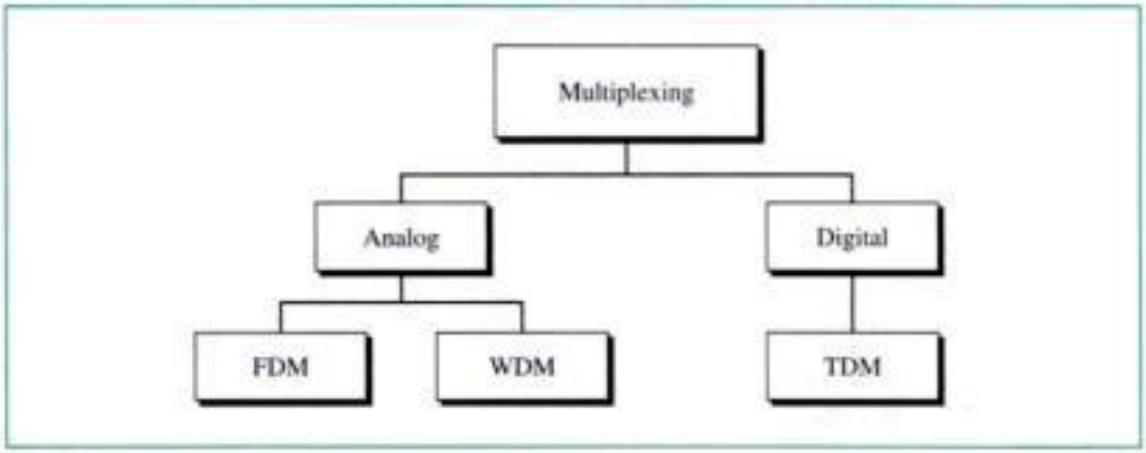

6.1 FDM

Frequency-division multiplexing (FDM) is an analog technique that can be applied when the **bandwidth** of a link (in hertz) is greater than the combined bandwidths of the signals to be transmitted. In FDM, signals generated by each sending device modulate different carrier frequencies. These modulated signals are then combined into a single composite signal that can be transported by the link. Carrier frequencies are separated by sufficient bandwidth to accommodate the modulated signal. These bandwidth ranges are the channels through which the various signals travel. Channels must be separated by strips of unused bandwidth **(guard bands)** to prevent signals from overlapping. In addition, carrier frequencies must not interfere with the original data frequencies. Failure to adhere to either condition can result in the unsuccessful recovery of the original signals.

Figure 6.3 gives a conceptual view of FDM. In this illustration, the transmission path is divided into three parts, each representing a channel to carry one transmission. As an analogy, imagine a point where three narrow streets merge to form a three-lane highway. Each of the three streets corresponds to a lane of the highway. Each car merging onto the highway from one of the streets still has its own lane and can travel without interfering with cars in other lanes.

Copyrighted material

Figure 6.3 *FDM*

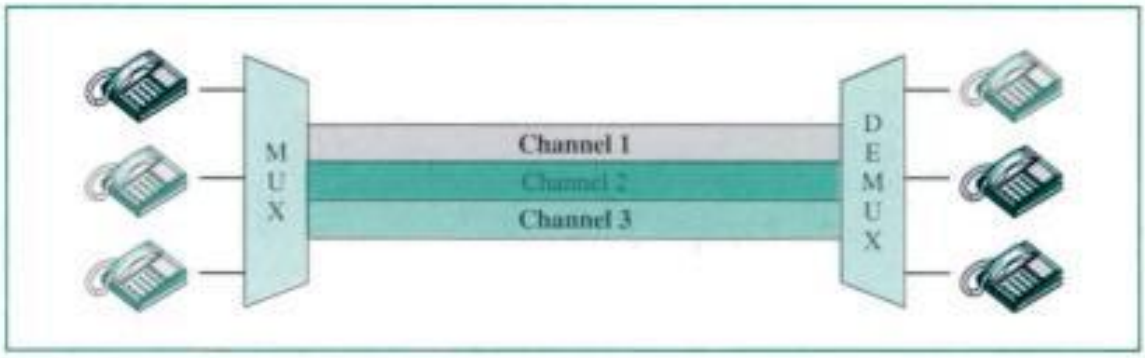

FDM is an analog multiplexing technique that combines signals.

Multiplexing Process

Figure 6.4 is a conceptual illustration of the multiplexing process. FDM is an analog process, and we show it here using telephones as the input devices. Each telephone generates a signal of a similar frequency range. Inside the multiplexer, these similar signals are modulated onto different carrier frequencies (f_1, f_2, and f_3). The resulting modulated signals are then combined into a single composite signal that is sent out over a media link that has enough bandwidth to accommodate it.

Figure 6.4 *FDM process*

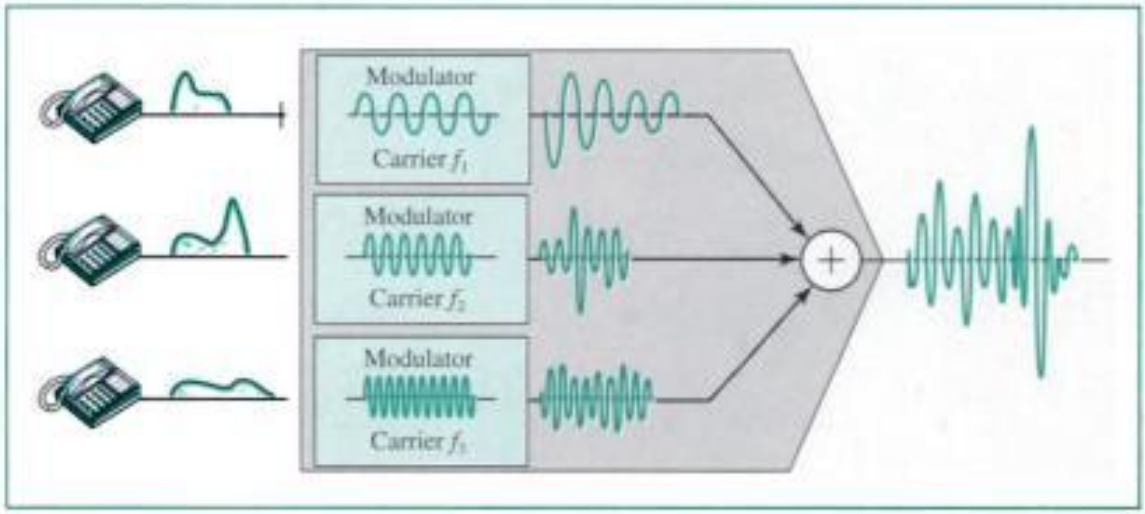

Demultiplexing Process

The demultiplexer uses a series of filters to decompose the multiplexed signal into its constituent component signals. The individual signals are then passed to a demodulator that separates them from their carriers and passes them to the waiting receivers. Figure 6.5 is a conceptual illustration of FDM, again using three telephones as the communication devices.

Copyrighted material

Figure 6.5 *FDM demultiplexing example*

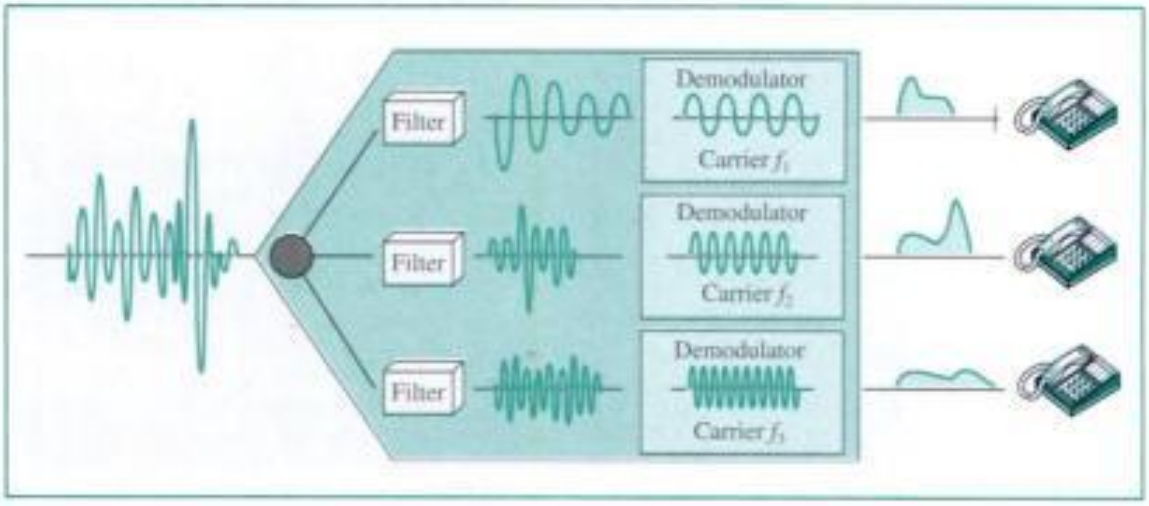

Example 1

Assume that a voice channel occupies a bandwidth of 4 KHz. We need to combine three voice channels into a link with a bandwidth of 12 KHz, from 20 to 32 KHz. Show the configuration using the frequency domain without the use of guard bands.

Solution

Shift (modulate) each of the three voice channels to a different bandwidth, as shown in Figure 6.6.

Figure 6.6 *Example 1*

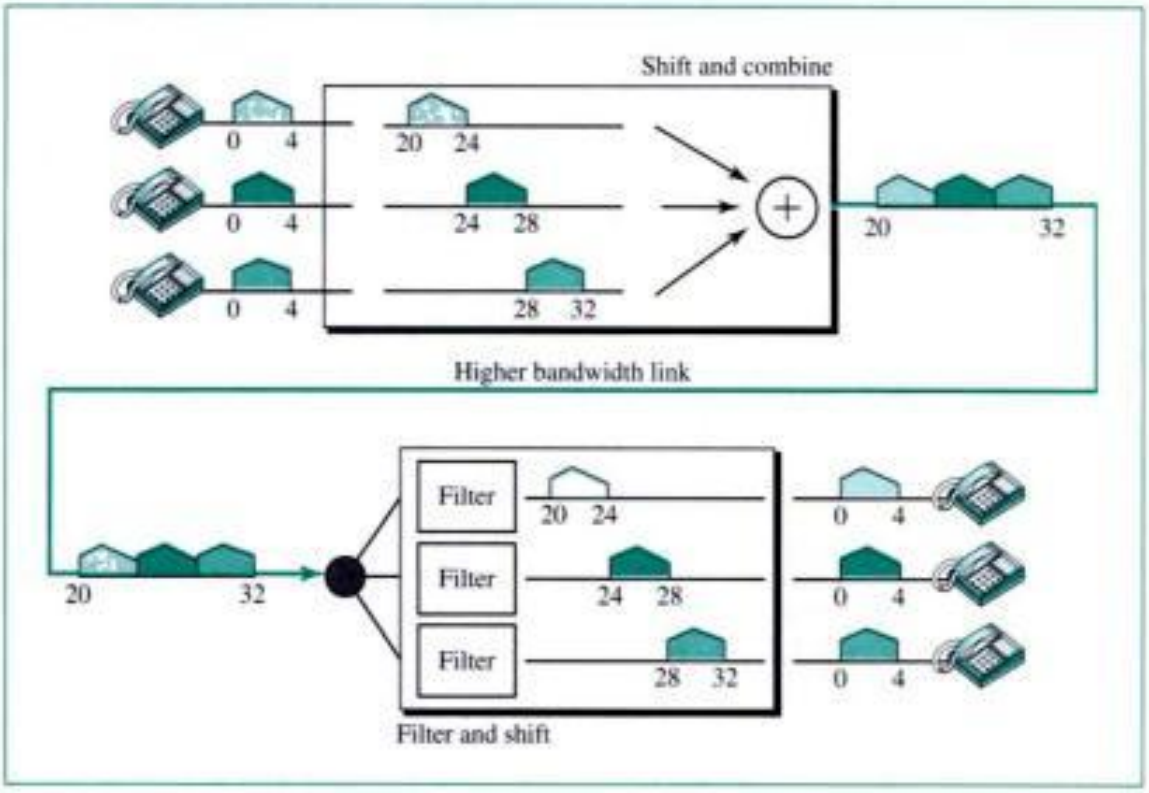

Copyrighted material

We use the 20- to 24-KHz bandwidth for the first channel, the 24- to 28-KHz bandwidth for the second channel, and the 28- to 32-KHz bandwidth for the third one. Then we combine them as shown in Figure 6.6. At the receiver, each channel receives the entire signal, using a filter to separate out its own signal. The first channel uses a filter that passes frequencies between 20 and 24 KHz and filters out (discards) any other frequencies. The second channel uses a filter that passes frequencies between 24 and 28 KHz, and the third channel uses a filter that passes frequencies between 28 and 32 KHz. Each channel then shifts the frequency to start from zero.

Example 2

Five channels, each with a 100-KHz bandwidth, are to be multiplexed together. What is the minimum bandwidth of the link if there is a need for a guard band of 10 KHz between the channels to prevent interference?

Solution

For five channels, we need at least four guard bands. This means that the required bandwidth is at least $5 \times 100 + 4 \times 10 = 540$ KHz, as shown in Figure 6.7.

Figure 6.7 *Example 2*

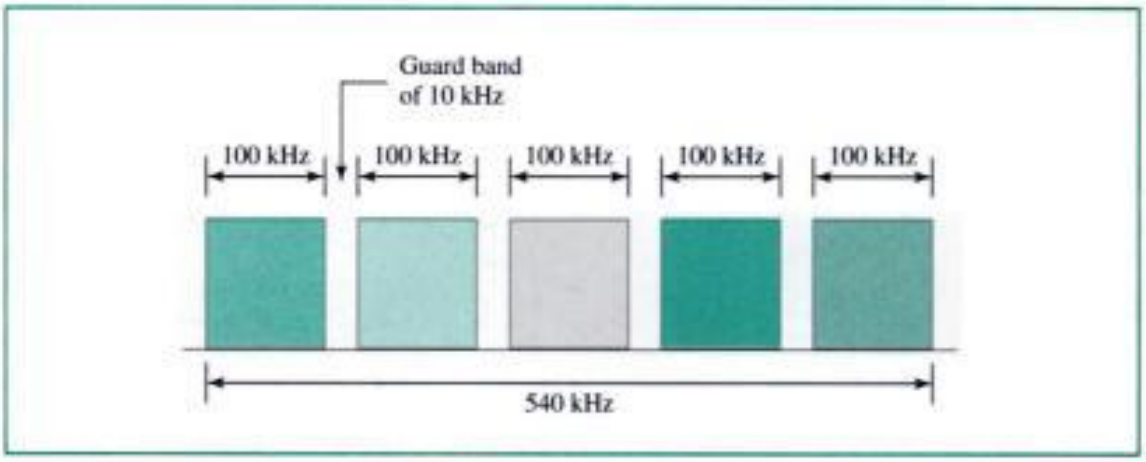

Example 3

Four data channels (digital), each transmitting at 1 Mbps, use a satellite channel of 1 MHz. Design an appropriate configuration using FDM.

Solution

The satellite channel is analog. We divide it into four channels, each channel having a 250-KHz bandwidth. Each digital channel of 1 Mbps is modulated such that each 4 bits are modulated to 1 Hz. One solution is 16-QAM modulation. Figure 6.8 shows one possible configuration.

The Analog Hierarchy

To maximize the efficiency of their infrastructure, telephone companies have traditionally multiplexed signals from lower-bandwidth lines onto higher-bandwidth lines. In this way, many switched or leased lines can be combined into fewer but bigger channels. For analog lines, FDM is used.

One of these hierarchical systems used by AT&T is made up of groups, supergroups, master groups, and jumbo groups (see Figure 6.9).

Copyrighted material

Figure 6.8 *Example 3*

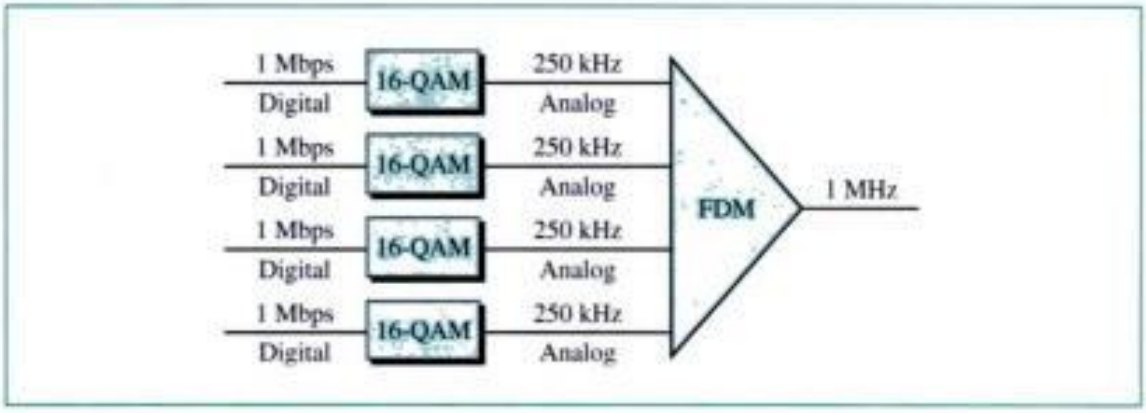

Figure 6.9 *Analog hierarchy*

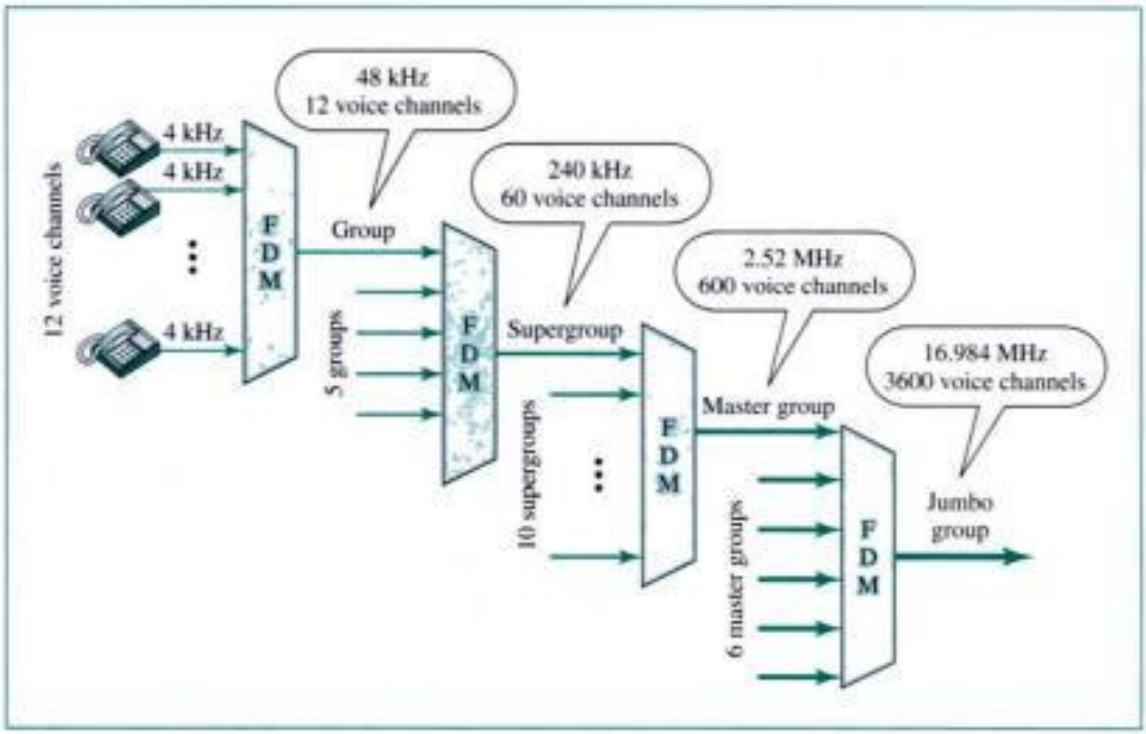

In this **analog hierarchy,** 12 voice channels are multiplexed onto a higher-bandwidth line to create a **group.** A group has 48 KHz of bandwidth and supports 12 voice channels.

At the next level, up to five groups can be multiplexed to create a composite signal called a **supergroup.** A supergroup has a bandwidth of 240 KHz and supports up to 60 voice channels. Supergroups can be made up of either five groups or 60 independent voice channels.

At the next level, 10 supergroups are multiplexed to create a **master group.** A master group must have 2.40 MHz of bandwidth, but the need for guard bands between the supergroups increases the necessary bandwidth to 2.52 MHz. Master groups support up to 600 voice channels.

Finally, six master groups can be combined into a **jumbo group.** A jumbo group must have 15.12 MHz (6×2.52 MHz) but is augmented to 16.984 MHz to allow for guard bands between the master groups.

Copyrighted material

Other Applications of FDM

A very common application of FDM is AM and FM radio broadcasting. Radio uses the air as the transmission medium. A special band, from 530 to 1700 KHz, is assigned to AM radio. All radio stations need to share this band. As discussed in Chapter 5, each AM station needs 10 KHz of bandwidth. Each station uses a different carrier frequency, which means it is shifting its signal and multiplexing. The signal which goes to the air is a combination of all signals. A receiver receives all these signals, but filters (by tuning) only the one which is desired. Without multiplexing only one AM station could broadcast to the common link, the air.

The situation is similar with FM broadcasting. However, FM uses a wider band, 88 to 108 MHz, because each station needs more bandwidth, 200 KHz.

Another common use of FDM is in television broadcasting. Each TV channel has its own bandwidth of 6 MHz.

The first generation of cellular telephones (still in operation) also uses FDM. Each user is assigned two 30-KHz channels, one for sending voice and one for receiving. The voice signal, which has a bandwidth of 3 KHz (from 300 to 3300 Hz), is modulated using FM. Remember that an FM signal has a bandwidth 10 times that of the modulating signal, which means each channel has 30 KHz (10×3) of bandwidth. Therefore, each user is given, by the base station, a 60-KHz bandwidth in a range available at the time of the call.

Example 4

The Advanced Mobile Phone System (AMPS) uses two bands. The first band, 824 to 849 MHz, is used for sending; and 869 to 894 MHz is used for receiving. Each user has a bandwidth of 30 KHz in each direction. The 3-KHz voice is modulated using FM, creating 30 KHz of modulated signal. How many people can use their cellular phones simultaneously?

Solution

Each band is 25 MHz. If we divide 25 MHz into 30 KHz, we get 833.33. In reality, the band is divided into 832 channels. Of these, 42 channels are used for control, which means only 790 channels are available for cellular phone users. We discuss AMPS in greater detail in Chapter 17.

Implementation

FDM can be implemented very easily. In many cases, such as radio and television broadcasting, there is no need for a physical multiplexer or demultiplexer. As long as the stations agree to send their broadcasts to the air using different carrier frequencies, multiplexing is achieved. In other cases, such as the cellular telephone system, a base station needs to assign a carrier frequency to the telephone user. There is not enough bandwidth available, in a cell, to be assigned permanently to every telephone user. When a user hangs up, the bandwidth is assigned to another caller.

6.2 WDM

Wave-division multiplexing (WDM) is designed to use the high data rate capability of fiber-optic cable. The optical fiber data rate is higher than the data rate of metallic transmission cable. Using a fiber-optic cable for one single line wastes the available bandwidth. Multiplexing allows us to connect several lines into one.

Copyrighted material

WDM is conceptually the same as FDM, except that the multiplexing and demultiplexing involve optical signals transmitted through fiber-optic channels. The idea is the same: We are combining different signals of different frequencies. However, the difference is that the frequencies are very high.

Figure 6.10 gives a conceptual view of a WDM multiplexer and demultiplexer. Very narrow bands of light from different sources are combined to make a wider band of light. At the receiver, the signals are separated by the demultiplexer.

Figure 6.10 *WDM*

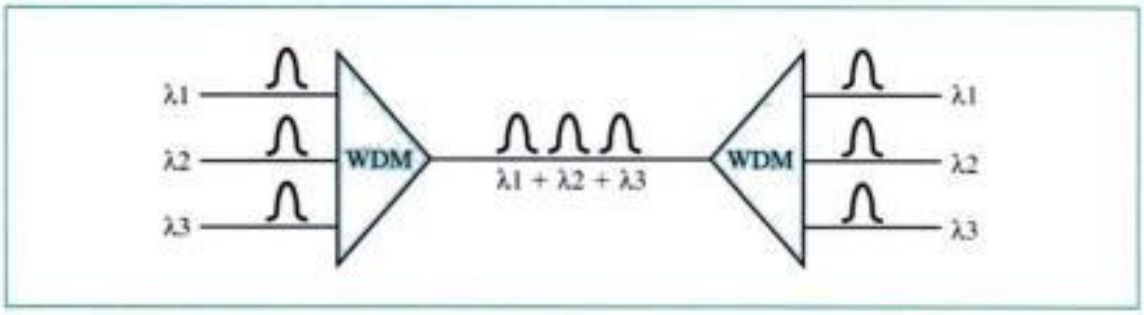

WDM is an analog multiplexing technique to combine optical signals.

One may wonder about the mechanism of WDM. Although the technology is very complex, the idea is very simple. We want to combine multiple light sources into one single light at the multiplexer and do the reverse at the demultiplexer. Combining and splitting of light sources are easily handled by a prism. Recall from basic physics that a prism bends a beam of light based on the angle of incidence and the frequency. Using this technique, a multiplexer can be made to combine several input beams of light, each containing a narrow band of frequencies, into one output beam of a wider band of frequencies. A demultiplexer can also be made to reverse the process. Figure 6.11 shows the concept.

Figure 6.11 *Prisms in WDM multiplexing and demultiplexing*

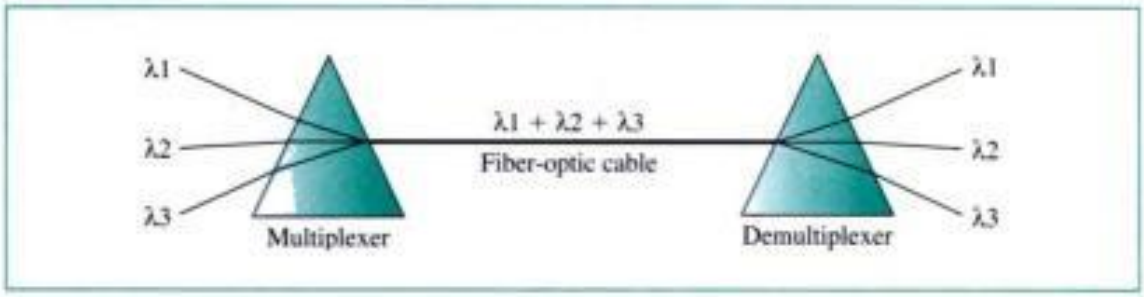

One application of WDM is the SONET network in which multiple optical fiber lines are multiplexed and demultiplexed. We discuss SONET in Chapter 9.

Copyrighted material

A new method, called **DWDM (dense WDM),** can multiplex a very large number of channels by spacing channels closer to one another. It achieves even greater efficiency.

6.3 TDM

Time-division multiplexing (TDM) is a digital process that allows several connections to share the high bandwidth of a link. Instead of sharing a portion of the bandwidth as in FDM, time is shared. Each connection occupies a portion of time in the link. Figure 6.12 gives a conceptual view of TDM. Note that the same link is used as in FDM; here, however, the link is shown sectioned by time rather than by frequency. In the figure, portions of signals 1, 2, 3, and 4 occupy the link sequentially.

Figure 6.12 *TDM*

TDM is a digital multiplexing technique to combine data.

Time Slots and Frames

The data flow of each connection is divided into units, and the link combines one unit of each connection to make a frame. The size of the unit can be 1 bit or several bits. For n input connections, a frame is organized into a minimum of n time slots, each slot carrying one unit from each connection. Figure 6.13 shows an example where n is 3.

In TDM, the data rate of the link that carries data from n connections must be n times the data rate of a connection to guarantee the flow of data. Therefore, the duration of a unit in a connection is n times the duration of a time slot in a frame. If we consider that the bit duration and bit rate are the inverse of each other, the above requirement makes sense. In Figure 6.13, the data rate of the link is 3 times the data rate of a connection; likewise, the duration of a unit on a connection is 3 times that of the time slot (duration of a unit on the link). In the figure we represent the data prior to multiplexing as 3 times the size of the data after multiplexing. This is just to convey the idea that each unit is 3 times longer in duration before multiplexing than after.

Copyrighted material

Figure 6.13 *TDM*

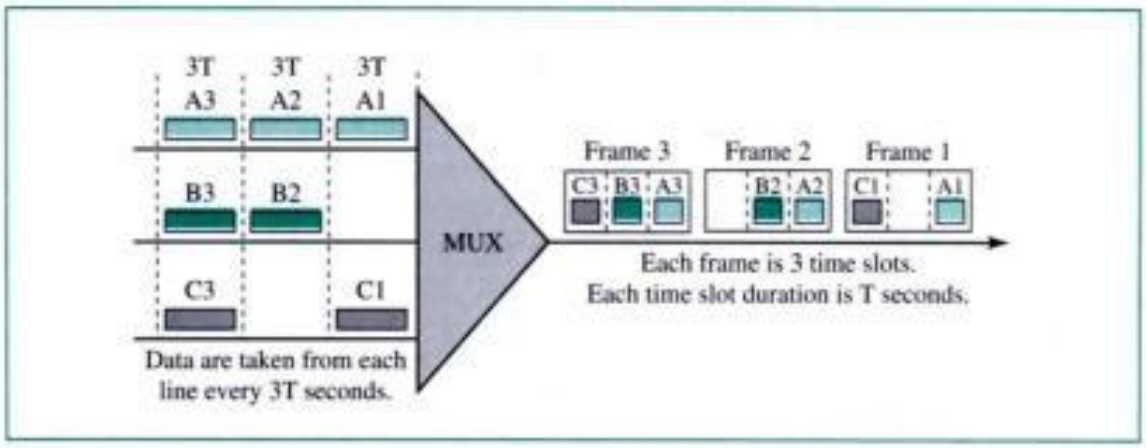

In a TDM, the data rate of the link is *n* times faster, and the unit duration is *n* times shorter.

Time slots are grouped into frames. A frame consists of one complete cycle of time slots, with one slot dedicated to each sending device. In a system with *n* input lines, each frame has *n* slots, with each slot allocated to carrying data from a specific input line.

Example 5

Four 1-Kbps connections are multiplexed together. A unit is 1 bit. Find (1) the duration of 1 bit before multiplexing, (2) the transmission rate of the link, (3) the duration of a time slot, and (4) the duration of a frame?

Solution

We can answer the questions as follows:

1. The duration of 1 bit before multiplexing is 1/1 Kbps, or 0.001 s (1 ms).
2. The rate of the link is 4 times the rate of a connection, or 4 Kbps.
3. The duration of each time slot is one-fourth of the duration of each bit before multiplexing, or 1/4 ms or 250 μs. Note that we can also calculate this from the data rate of the link, 4 Kbps. The bit duration is the inverse of the data rate, or 1/4 Kbps or 250 μs.
4. The duration of a frame is always the same as the duration of each unit before multiplexing, or 1 ms. We can also calculate this in another way. Each frame in this case includes four time slots. So the duration of a frame is 4 times of 250 μs, or 1 ms.

Interleaving

TDM can be visualized as two fast rotating switches, one on the multiplexing side and the other on the demultiplexing side. The switches are synchronized and rotate at the same speed, but in opposite directions. On the multiplexing side, as the switch opens in front of a connection, that connection has the opportunity to send a unit onto the path. This process is called **interleaving.** On the demultiplexing side, as the switch opens in front of a connection, that connection has the opportunity to receive a unit from the path.

Figure 6.14 shows the interleaving process for the connection shown in Figure 6.13. In this figure, we assume that no switching is involved and that the data from the first

Copyrighted material

connection at the multiplexer site go to the first connection at the demultiplexer. We discuss switching in Chapter 8.

Figure 6.14 *Interleaving*

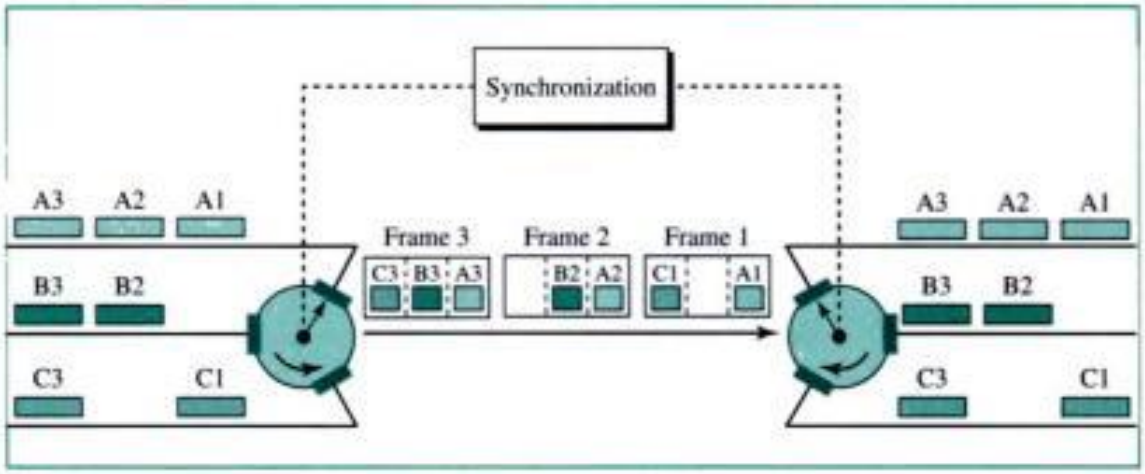

Example 6

Four channels are multiplexed using TDM. If each channel sends 100 bytes/s and we multiplex 1 byte per channel, show the frame traveling on the link, the size of the frame, the duration of a frame, the frame rate, and the bit rate for the link.

Solution

The multiplexer is shown in Figure 6.15. Each frame carries 1 byte from each channel. So the size of each frame is 4 bytes or 32 bits. Because each channel is sending 100 bytes per second and a frame carries 1 byte from each channel, the frame rate must be 100 frames per second. The duration of a frame is therefore 1/100 s. The link is carrying 100 frames per second, and each frame contains 32 bits, so the bit rate is 100×32 or 3200 bps. This is actually 4 times the bit rate for each channel, which is $100 \times 8 = 800$ bps.

Figure 6.15 *Example 6*

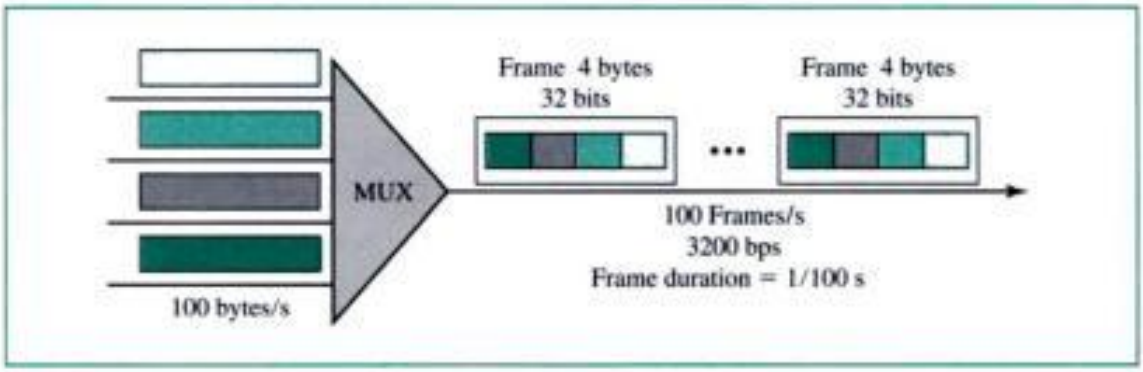

Example 7

A multiplexer combines four 100-Kbps channels using a time slot of 2 bits. Show the output with four arbitrary inputs. What is the frame rate? What is the frame duration? What is the bit rate? What is the bit duration?

Copyrighted material

Solution

Figure 6.16 shows the output for four arbitrary inputs. The link carries 50,000 frames per second since each frame contains 2 bits per channel. The frame duration is therefore 1/50,000 s or 20 μs. The frame rate is 50,000 frames per second, and each frame carries 8 bits; the bit rate is 50,000 × 8 = 400,000 bits or 400 Kbps. The bit duration is 1/400,000 s, or 2.5 μs. Note that the frame duration is 8 times the bit duration because each frame is carrying 8 bits.

Figure 6.16 *Example 7*

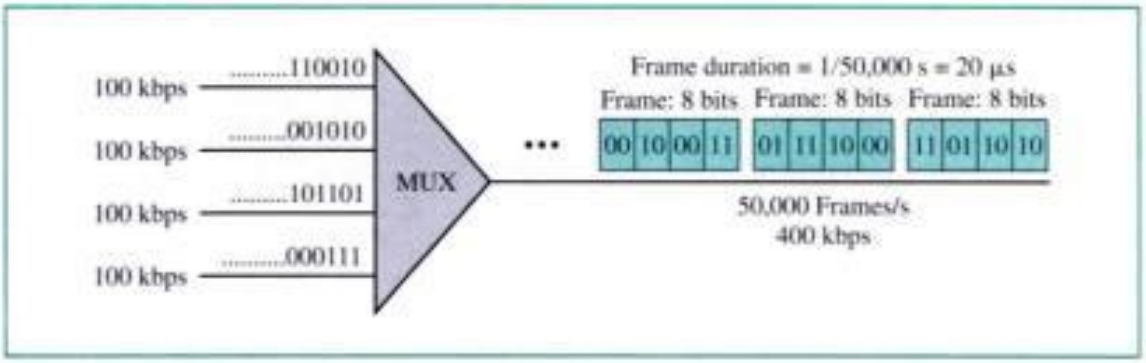

Synchronizing

You may have noticed that the implementation of TDM is not as easy as that of FDM. Synchronization between the multiplexer and demultiplexer is a major issue. If the multiplexer and the demultiplexer are out of synchronization, a bit belonging to one channel may be received by the wrong channel. For this reason, one or more synchronization bits are usually added to the beginning of each frame. These bits, called **framing bits,** follow a pattern, frame to frame, that allows the demultiplexer to synchronize with the incoming stream so that it can separate the time slots accurately. In most cases, this synchronization information consists of 1 bit per frame, alternating between 0 and 1, as shown in Figure 6.17.

Figure 6.17 *Framing bits*

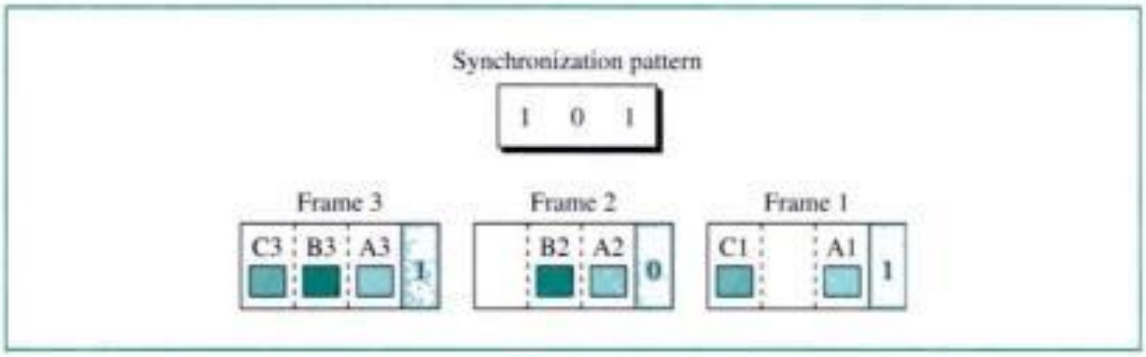

Example 8

We have four sources, each creating 250 characters per second. If the interleaved unit is a character and 1 synchronizing bit is added to each frame, find (1) the data rate of each source, (2) the

Copyrighted material

duration of each character in each source, (3) the frame rate, (4) the duration of each frame, (5) the number of bits in each frame, and (6) the data rate of the link.

Solution

We can answer the questions as follows:

1. The data rate of each source is $250 \times 8 = 2000$ bps = 2 Kbps.
2. Each source sends 250 characters per second; therefore, the duration of a character is 1/250 s, or 4 ms.
3. Each frame has one character from each source, which means the link needs to send 250 frames per second to keep the transmission rate of each source.
4. The duration of each frame is 1/250 s, or 4 ms. Note that the duration of each frame is the same as the duration of each character coming from each source.
5. Each frame carries 4 characters and 1 extra synchronizing bit. This means that each frame is $4 \times 8 + 1 = 33$ bits.
6. The link sends 250 frames per second, and each frame contains 33 bits. This means that the data rate of the link is 250×33, or 8250 bps. Note that the bit rate of the link is more than the combined bit rates of the four channels. If we add the bit rates of four channels, we get 8000 bps. Because 250 frames are traveling per second and each contains 1 extra bit for synchronizing, we need to add 250 to the sum to get 8250 bps.

Bit Padding

It is possible to multiplex data from devices of different data rates. For example, device A could use one time slot, while the faster device B could use two. The number of slots in a frame and the input lines to which they are assigned remain fixed throughout a given system, but devices of different data rates may control different numbers of those slots. *Remember,* the time slot length is fixed. For this technique to work, therefore, the different data rates must be integer multiples of each other. For example, we can accommodate a device that is 5 times faster than the other devices by giving it five slots to one for each of the other devices. We, however, cannot accommodate a device that is 5.5 times faster by this method, because we cannot introduce one-half of a time slot into a frame.

When the speeds are not integer multiples of each other, they can be made to behave as if they were, by a technique called **bit padding.** In bit padding, the multiplexer adds extra bits to a device's source stream to force the speed relationships among the various devices into integer multiples of each other. For example, if we have one device with a bit rate of 2.75 times that of the other devices, we can add enough bits to raise the rate to 3 times that of the others. The extra bits are then discarded by the demultiplexer.

Example 9

Two channels, one with a bit rate of 100 Kbps and another with a bit rate of 200 Kbps, are to be multiplexed. How this can be achieved? What is the frame rate? What is the frame duration? What is the bit rate of the link?

Solution

We can allocate one slot to the first channel and two slots to the second channel. Each frame carries 3 bits. The frame rate is 100,000 frames per second because it carries 1 bit from the first

Copyrighted material

channel. The frame duration is 1/100,000 s, or 10 ms. The bit rate is 100,000 frames/s × 3 bits/frame, or 300 Kbps. Note that because each frame carries 1 bit from the first channel, the bit rate for the first channel is preserved. The bit rate for the second channel is also preserved because each frame carries 2 bits from the second channel.

Digital Signal (DS) Service

Telephone companies implement TDM through a hierarchy of digital signals, called **digital signal (DS) service.** Figure 6.18 shows the data rates supported by each level.

Figure 6.18 *DS hierarchy*

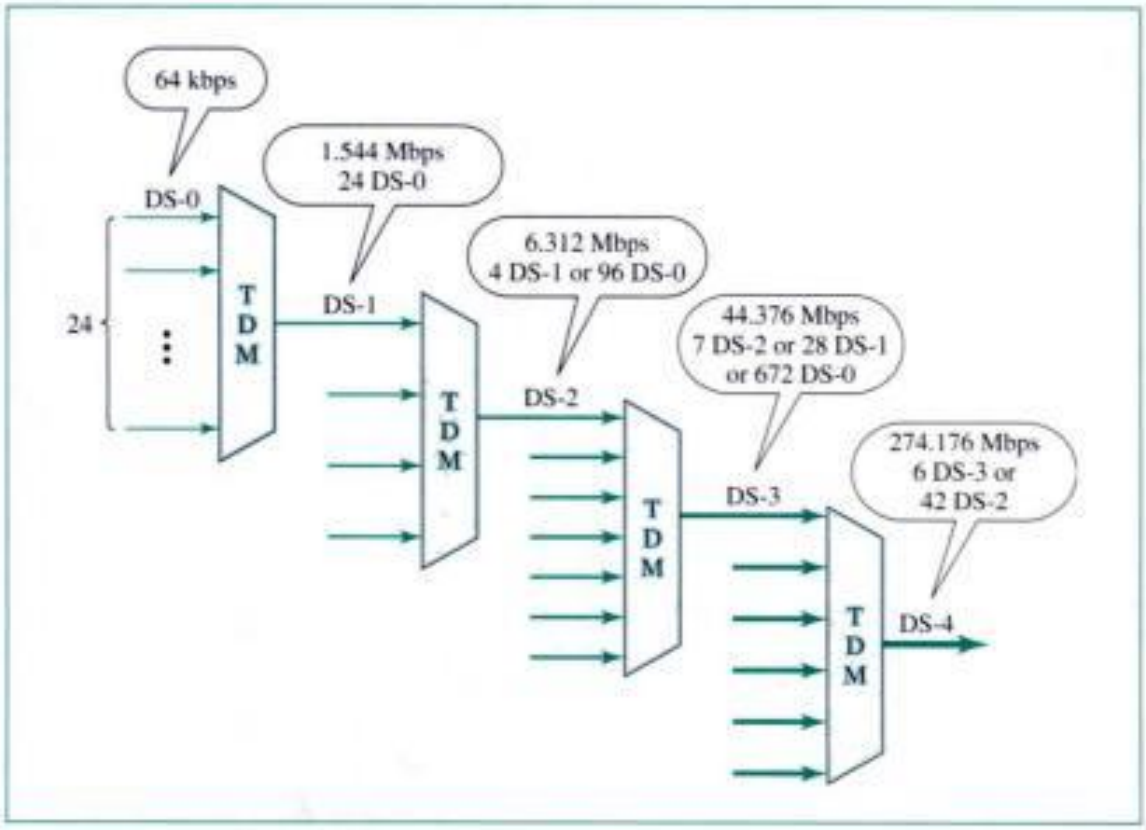

- A DS-0 service is a single digital channel of 64 Kbps.
- DS-1 is a 1.544-Mbps service; 1.544 Mbps is 24 times 64 Kbps plus 8 Kbps of overhead. It can be used as a single service for 1.544-Mbps transmissions, or it can be used to multiplex 24 DS-0 channels or to carry any other combination desired by the user that can fit within its 1.544-Mbps capacity.
- DS-2 is a 6.312-Mbps service; 6.312 Mbps is 96 times 64 Kbps plus 168 Kbps of overhead. It can be used as a single service for 6.312-Mbps transmissions, or it can be used to multiplex 4 DS-1 channels, 96 DS-0 channels, or a combination of these service types.
- DS-3 is a 44.376-Mbps service; 44.376 Mbps is 672 times 64 Kbps plus 1.368 Mbps of overhead. It can be used as a single service for 44.376-Mbps

Copyrighted material

transmissions, or it can be used to multiplex 7 DS-2 channels, 28 DS-1 channels, 672 DS-0 channels, or a combination of these service types.

- DS-4 is a 274.176-Mbps service; 274.176 is 4032 times 64 Kbps plus 16.128 Mbps of overhead. It can be used to multiplex 6 DS-3 channels, 42 DS-2 channels, 168 DS-1 channels, 4032 DS-0 channels, or a combination of these service types.

T Lines

DS-0, DS-1, and so on are the names of services. To implement those services, the telephone companies use **T lines** (T-1 to T-4). These are lines with capacities precisely matched to the data rates of the DS-1 to DS-4 services (see Table 6.1).

Table 6.1 *DS and T line rates*

Service	*Line*	*Rate (Mbps)*	*Voice Channels*
DS-1	**T-1**	1.544	24
DS-2	**T-2**	6.312	96
DS-3	**T-3**	44.736	672
DS-4	**T-4**	274.176	4032

The T-1 line is used to implement DS-1, T-2 is used to implement DS-2, and so on. As you can see from Table 6.1, DS-0 is not actually offered as a service, but it has been defined as a basis for reference purposes.

T Lines for Analog Transmission

T lines are digital lines designed for the transmission of digital data, audio, or video. However, they also can be used for analog transmission (regular telephone connections), provided the analog signals are sampled first, then time-division multiplexed.

The possibility of using T lines as analog carriers opened up a new generation of services for the telephone companies. Earlier, when an organization wanted 24 separate telephone lines, it needed to run 24 twisted-pair cables from the company to the central exchange. (Remember those old movies showing a busy executive with 10 telephones lined up on his desk? Or the old office telephones with a big fat cable running from them? Those cables contained a bundle of separate lines.) Today, that same organization can combine the 24 lines into one T-1 line and run only the T-1 line to the exchange. Figure 6.19 shows how 24 voice channels can be multiplexed onto one T-1 line. (Refer to Chapter 5 for PCM encoding.)

The T-1 Frame

As noted above, DS-1 requires 8 Kbps of overhead. To understand how this overhead is calculated, we must examine the format of a 24-voice-channel frame.

The frame used on a T-1 line is usually 193 bits divided into 24 slots of 8 bits each plus 1 extra bit for synchronization ($24 \times 8 + 1 = 193$); see Figure 6.20. In other words, each slot contains one signal segment from each channel; 24 segments are interleaved

Copyrighted material

Figure 6.19 *T-1 line for multiplexing telephone lines*

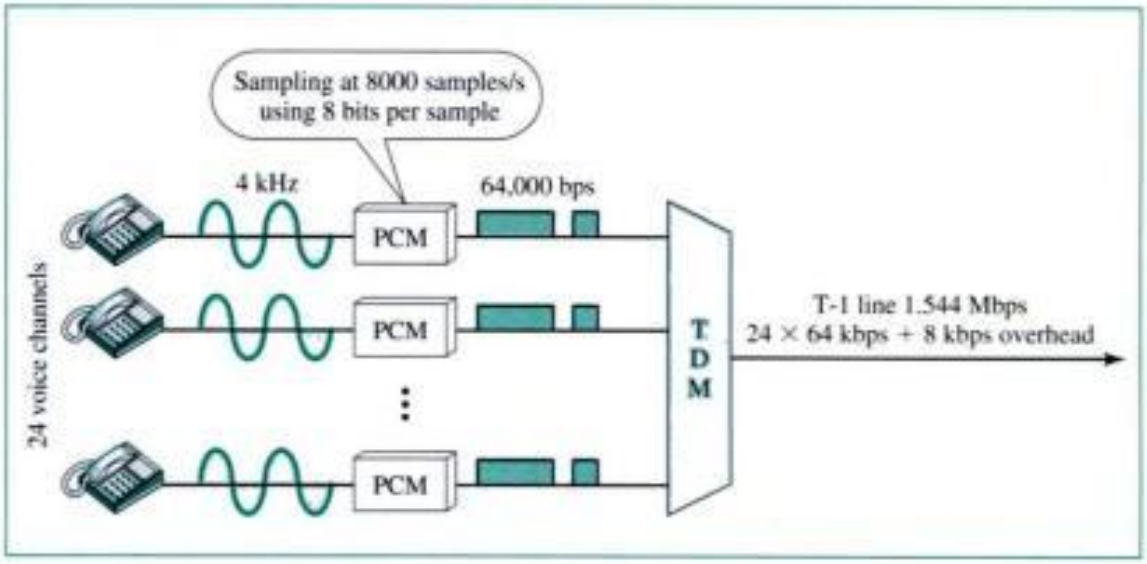

in one frame. If a T-1 line carries 8000 frames, the data rate is 1.544 Mbps ($193 \times 8000 = 1.544$ Mbps)—the capacity of the line.

Figure 6.20 *T-1 frame structure*

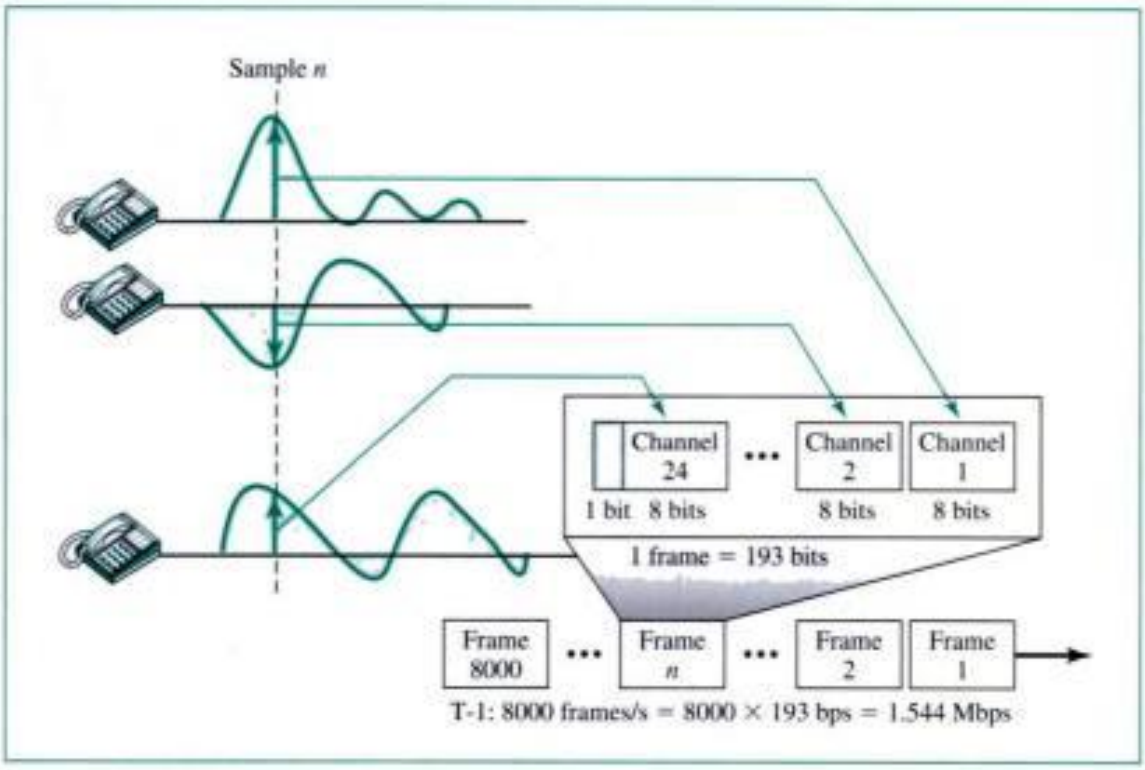

E Lines

Europeans use a version of T lines called **E lines.** The two systems are conceptually identical, but their capacities differ. Table 6.2 shows the E lines and their capacities.

Copyrighted material

Table 6.2 *E line rates*

Line	*Rate (Mbps)*	*Voice Channels*
E-1	2.048	30
E-2	8.448	120
E-3	34.368	480
E-4	139.264	1920

Inverse TDM

As its name implies, **inverse multiplexing** is the opposite of multiplexing. Inverse multiplexing takes the data stream from one high-speed line and breaks it into portions that can be sent across several lower-speed lines simultaneously, with no loss in the collective data rate (see Figure 6.21).

Figure 6.21 *Multiplexing and inverse multiplexing*

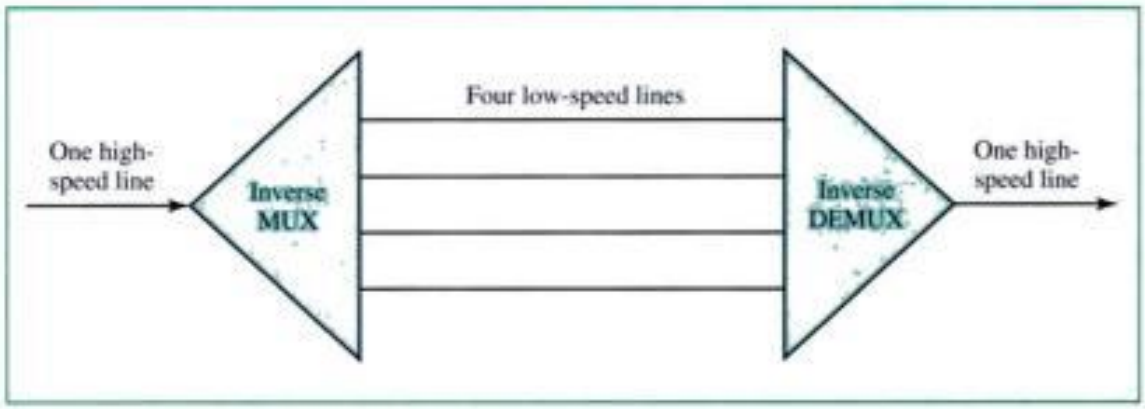

Why do we need inverse multiplexing? Think of an organization that wants to send data, audio, and video, each of which requires a different data rate. To send audio, it may need a 64-Kbps link. To send data, it may need a 128-Kbps link. And to send video, it may need a 1.544-Mbps link. To accommodate all these needs, the organization has two options. It can lease a 1.544-Mbps channel from a common carrier (the telephone company) and use the full capacity only sometimes, which is not an efficient use of the facility. Or it can lease several separate channels of lower data rates. Using an agreement called **bandwidth on demand,** the organization can use any of these channels whenever and however it needs them. Voice transmissions can be sent intact over any of the channels. Data or video signals can be broken up and sent over two or more lines. In other words, the data and video signals can be inversely multiplexed over multiple lines.

More TDM Applications

Some second-generation cellular telephone companies use TDM. For example, the digital version of the cellular telephony we discussed before still divides the available

Copyrighted material

bandwidth into 30-KHz bands and uses FDM to combine these bands. For each band, it applies TDM so that six users share the band. This means that each 30-KHz band is now made of six time slots, and the digitized voice signals of the users are inserted in the slots. Using TDM, the number of telephone users in each area is now six times greater. We discuss second-generation cellular telephony in Chapter 17.

6.4 KEY TERMS

analog hierarchy
bandwidth on demand
bit padding
channel
demultiplexer (DEMUX)
dense wave-division multiplexing (DWDM)
digital signal (DS) service
E lines
framing bit
frequency-division multiplexing (FDM)
group
guard band
interleaving
inverse multiplexing
jumbo group
link
master group
multiplexer (MUX)
multiplexing
supergroup
T lines
time-division multiplexing (TDM)
wave-division multiplexing (WDM)

6.5 SUMMARY

- Multiplexing is the simultaneous transmission of multiple signals across a single data link.
- Frequency-division multiplexing (FDM) and wave-division multiplexing (WDM) are techniques for analog signals, while time-division multiplexing (TDM) is for digital signals.
- In FDM, each signal modulates a different carrier frequency. The modulated carriers are combined to form a new signal that is then sent across the link.
- In FDM, multiplexers modulate and combine signals while demultiplexers decompose and demodulate.
- In FDM, guard bands keep the modulated signals from overlapping and interfering with one another.
- Telephone companies use FDM to combine voice channels into successively larger groups for more efficient transmission.
- Wave-division multiplexing is similar in concept to FDM. The signals being multiplexed, however, are light waves.
- In TDM, digital signals from *n* devices are interleaved with one another, forming a frame of data (bits, bytes, or any other data unit).
- Framing bits allow the TDM multiplexer to synchronize properly.
- Digital signal (DS) is a hierarchy of TDM signals.

Copyrighted material

- T lines (T-1 to T-4) are the implementation of DS services. A T-1 line consists of 24 voice channels.
- T lines are used in North America. The European standard defines a variation called E lines.
- Inverse multiplexing splits a data stream from one high-speed line onto multiple lower-speed lines.

6.6 PRACTICE SET

Review Questions

1. What are the three major multiplexing techniques?
2. How does FDM combine multiple signals into one?
3. What is the purpose of a guard band?
4. How is one FDM signal separated into its original components?
5. Describe the analog hierarchy in which groups of signals are successively multiplexed onto higher-bandwidth lines.
6. How is WDM similar to FDM? How are they different?
7. How does TDM combine multiple signals into one?
8. How is one TDM signal separated into its original components?
9. Discuss the duration of a data unit before and after the TDM process.
10. Describe the DS hierarchy.
11. How are T lines related to DS service?
12. How can T lines be used for analog transmission?
13. What is the relationship between the number of slots in a frame and the number of input lines for TDM?
14. Is bit padding a technique for FDM or TDM? Is the framing bit used in FDM or TDM?
15. What is inverse multiplexing?

Multiple-Choice Questions

16. The sharing of a medium and its link by two or more devices is called _____.
    a. Modulation
    b. Encoding
    c. Line discipline
    d. Multiplexing
17. Which multiplexing technique transmits analog signals?
    a. FDM
    b. TDM
    c. WDM
    d. (a) and (c)

Copyrighted material

18. Which multiplexing technique transmits digital signals?
    a. FDM
    b. TDM
    c. WDM
    d. None of the above
19. Which multiplexing technique shifts each signal to a different carrier frequency?
    a. FDM
    b. TDM
    c. Both (a) and (b)
    d. None of the above
20. In TDM, for n signal sources of the same data rate, each frame contains _____ slots.
    a. n
    b. $n + 1$
    c. $n - 1$
    d. 0 to n
21. In TDM, the transmission rate of the multiplexed path is usually _____ the sum of the transmission rates of the signal sources.
    a. Greater than
    b. Less than
    c. Equal to
    d. 1 less than
22. In AT&T's FDM hierarchy, the bandwidth of each group type can be found by multiplying _____ and adding extra bandwidth for guard bands.
    a. The number of voice channels by 4000 Hz
    b. The sampling rate by 4000 Hz
    c. The number of voice channels by 8 bits/sample
    d. The sampling rate by 8 bits/sample
23. DS-1 through DS-4 are _____ while T-1 through T-4 are _____.
    a. Services; multiplexers
    b. Services; signals
    c. Services; lines
    d. Multiplexers; signals
24. In a T-1 line, _____ interleaving occurs.
    a. Bit
    b. Byte
    c. DS-0
    d. Switch
25. Guard bands increase the bandwidth for _____.
    a. FDM
    b. TDM

Copyrighted material

c. Both (a) and (b)

d. None of the above

26. Which multiplexing technique involves signals composed of light beams?

a. FDM

b. TDM

c. WDM

d. None of the above

Exercises

27. Given the following information, find the minimum bandwidth for the path.

a. FDM multiplexing

b. Five lines, each requiring 4000 Hz

c. 200-Hz guard separating each band

28. Given the following information, find the maximum bandwidth for each signal source.

a. FDM multiplexing

b. Total available bandwidth = 7900 Hz

c. Three signal sources

d. A 200-Hz guard band between each signal source

29. Five signal sources are multiplexed using TDM. Each source produces 100 characters per second. Assume that there is byte interleaving and that each frame requires 1 bit for synchronization. What is the frame rate? What is the bit rate on the path?

30. Draw the TDM frames showing the character data, given the following information:

a. Four signal sources

b. Source 1 message: T E G

c. Source 2 message: A

d. Source 3 message:

e. Source 4 message: E F I L

31. What is the time duration for a T-1 frame?

32. The T-2 line offers a 6.312-Mbps service. Why is this number not 4×1.544 Mbps?

33. In Figure 6.19 the sampling rate is 8000 samples/s. Why?

34. If a single-mode optical fiber can transmit at 2 Gbps, how many telephone channels can one cable carry?

35. Calculate the overhead (in bits) per voice channel for each T line. What is the percentage of overhead per voice channel?

36. Three voice-grade lines, each using 4 KHz, are frequency multiplexed together by using AM and canceling the lower modulated band. Draw the frequency-domain representation of the resulting signal if the carrier frequencies are at 4, 10, and 16 KHz, respectively. What is the bandwidth of the resulting signal?

37. Show the frequency-domain representation of the resulting signals in each stage in Figure 6.22. Assume no guard band. Choose appropriate carrier frequencies.

Copyrighted material

Figure 6.22 *Exercise 37*

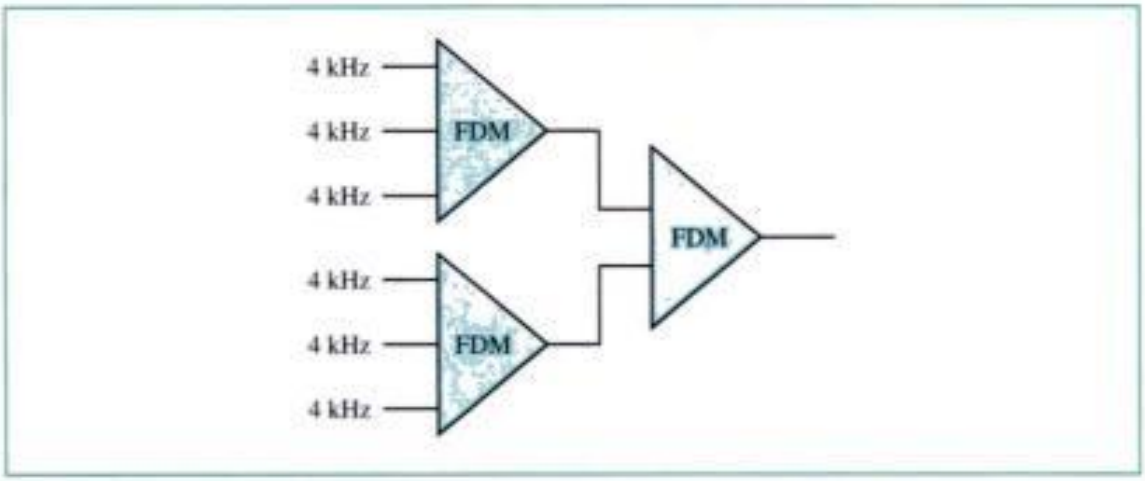

38. We have multiplexed 100 computers using synchronous TDM. If each computer sends data at the rate of 14.4 Kbps, what is the minimum bit rate of the line? Can a T-1 line handle this situation?

39. What is the minimum bit rate of each line in Figure 6.23 if we are using synchronous TDM? Ignore framing (synchronization) bits.

Figure 6.23 *Exercise 39*

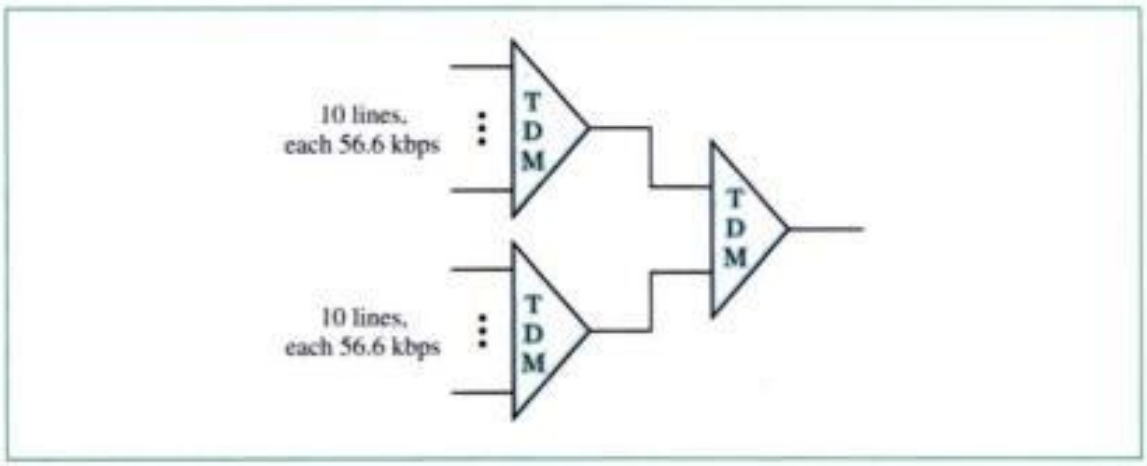

40. Figure 6.24 shows a multiplexer. If the slot is only 10 bits long (3 bits taken from each input plus 1 framing bit), what is the output bit stream? What is the output bit

Figure 6.24 *Exercise 40*

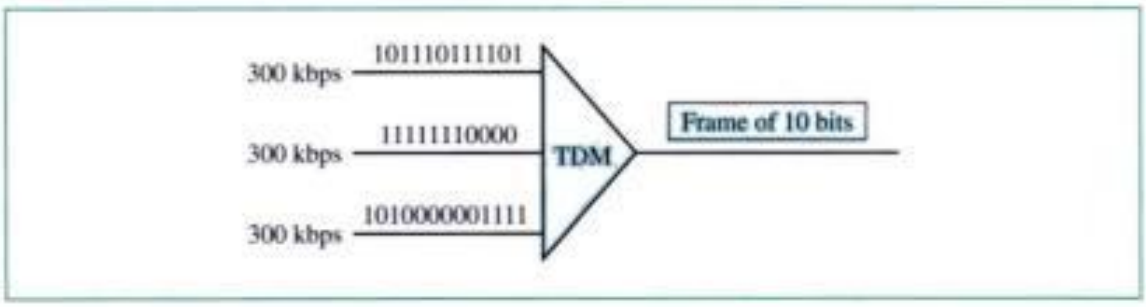

Copyrighted material

rate? What is the duration of each bit in the output line? How many slots are sent per second? What is the duration of each slot?

41. Figure 6.25 shows a demultiplexer. If the input slot is 12 bits long (ignore framing bits), what is the bit stream in each output? What is the bit rate for each output line?

Figure 6.25 *Exercise 41*

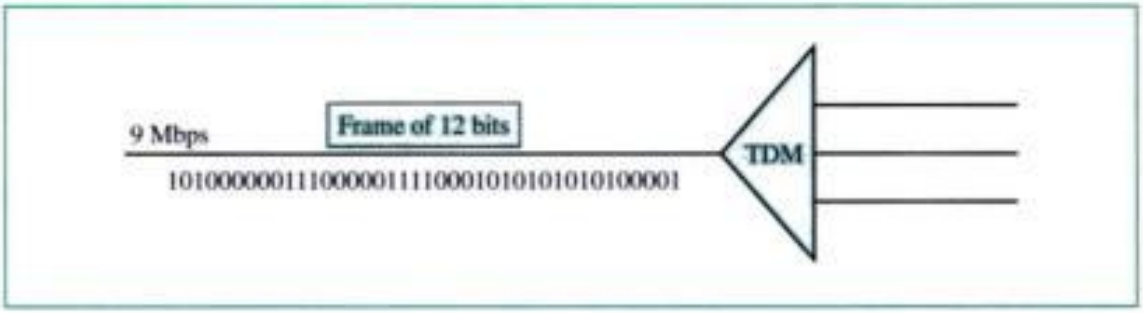

42. Figure 6.26 shows an inverse multiplexer. If the input data rate is 15 Mbps, what is the rate for each line? Can we use the service of T-1 lines for this purpose? Ignore the framing bits.

Figure 6.26 *Exercise 42*

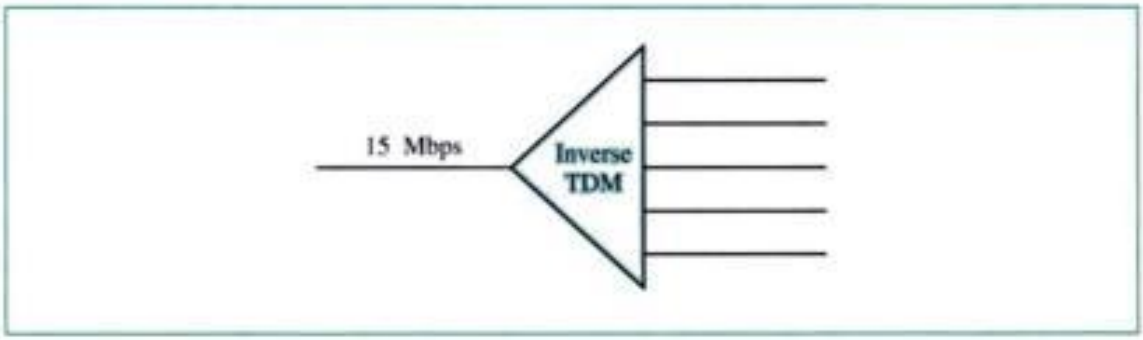

43. What is the overhead (number of extra bits per second) in a T-1 line?

44. If we want to connect two Ethernet LANs with 10-Mbps data rates, how many T-1 lines do we need? Do we need multiplexers or inverse multiplexers? Show the configuration.

Copyrighted material

Copyrighted material

CHAPTER 7

Transmission Media

We discussed many issues related to the physical layer in Chapters 3 through 6. In this chapter, we discuss transmission media. Transmission media are actually located below the physical layer and directly controlled by the physical layer. We can say that transmission media belong to layer zero. Figure 7.1 shows the position of transmission media in relation to the physical layer.

Figure 7.1 *Transmission medium and physical layer*

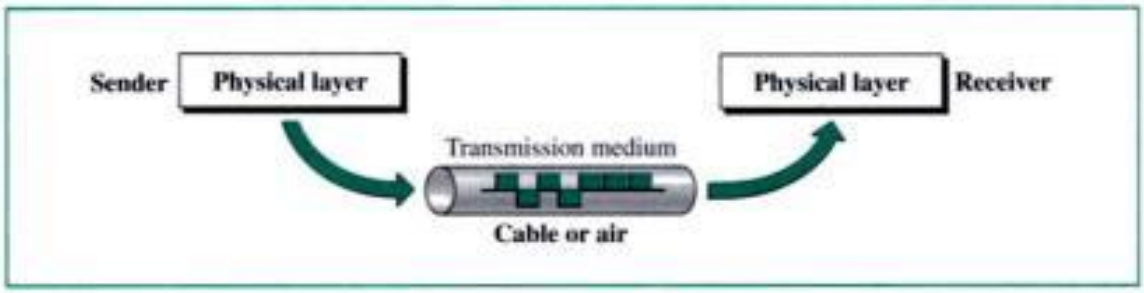

As discussed in Chapter 3, computers and other telecommunication devices use signals to represent data. These signals are transmitted from one device to another in the form of electromagnetic energy, which is propagated through transmission media.

Electromagnetic energy, a combination of electric and magnetic fields vibrating in relation to each other, includes power, radio waves, infrared light, visible light, ultraviolet light, and X, gamma, and cosmic rays. Each of these constitutes a portion of the **electromagnetic spectrum.** Not all portions of the spectrum are currently usable for telecommunications, however. The media to harness those that are usable are also limited to a few types.

For the purpose of telecommunications, transmission media can be divided into two broad categories: guided and unguided. Guided media include twisted-pair cable, coaxial cable, and fiber-optic cable. Unguided medium is usually air. Figure 7.2 shows this taxonomy.

Copyrighted material

Figure 7.2 *Classes of transmission media*

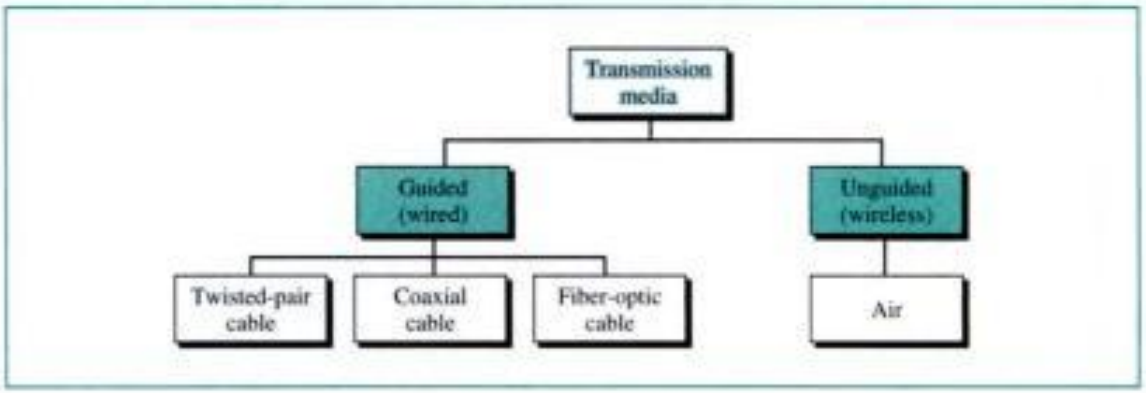

7.1 GUIDED MEDIA

Guided media, which are those that provide a conduit from one device to another, include **twisted-pair cable, coaxial cable,** and **fiber-optic cable.** A signal traveling along any of these media is directed and contained by the physical limits of the medium. Twisted-pair and coaxial cable use metallic (copper) conductors that accept and transport signals in the form of electric current. **Optical fiber** is a glass cable that accepts and transports signals in the form of light.

Twisted-Pair Cable

A twisted pair consists of two conductors (normally copper), each with its own plastic insulation, twisted together, as shown in Figure 7.3.

Figure 7.3 *Twisted-pair cable*

One of the wires is used to carry signals to the receiver, and the other is used only as a ground reference. The receiver uses the difference between the two levels.

In addition to the signal sent by the sender on one of the wires, interference (noise) and crosstalk may affect both wires and create unwanted signals. The receiver at the end, however, operates only on the difference between these unwanted signals. This means that if the two wires are affected by noise or crosstalk equally, the receiver is immune (the difference is zero).

Copyrighted material

If the two wires are parallel, the effect of these unwanted signals is not the same in both wires because they are at different locations relative to the noise or crosstalk sources (e.g., one closer and one farther). This results in a difference at the receiver. By twisting the pairs, a balance is maintained. For example, suppose in one twist, one wire is closer to the noise source and the other farther; in the next twist, the reverse is true. Twisting makes it probable that both wires are equally affected by external influences (noise or crosstalk). This means that the receiver, which calculates the difference between the two, receives no unwanted signals. From the above discussion, it is clear that the number of twists per unit of length (e.g., inch) determines the quality of the cable; more twists mean better quality.

Unshielded versus Shielded Twisted-Pair Cable

The most common twisted-pair cable used in communications is referred to as **unshielded twisted-pair (UTP).** IBM has also produced a version of twisted-pair cable for its use called **shielded twisted-pair (STP).** STP cable has a metal foil or braided-mesh covering that encases each pair of insulated conductors. Although metal casing improves the quality of cable by preventing the penetration of noise or crosstalk, it is bulkier and more expensive. Figure 7.4 shows the difference between UTP and STP. Our discussion focuses primarily on UTP because STP is seldom used outside of IBM.

Figure 7.4 *UTP and STP*

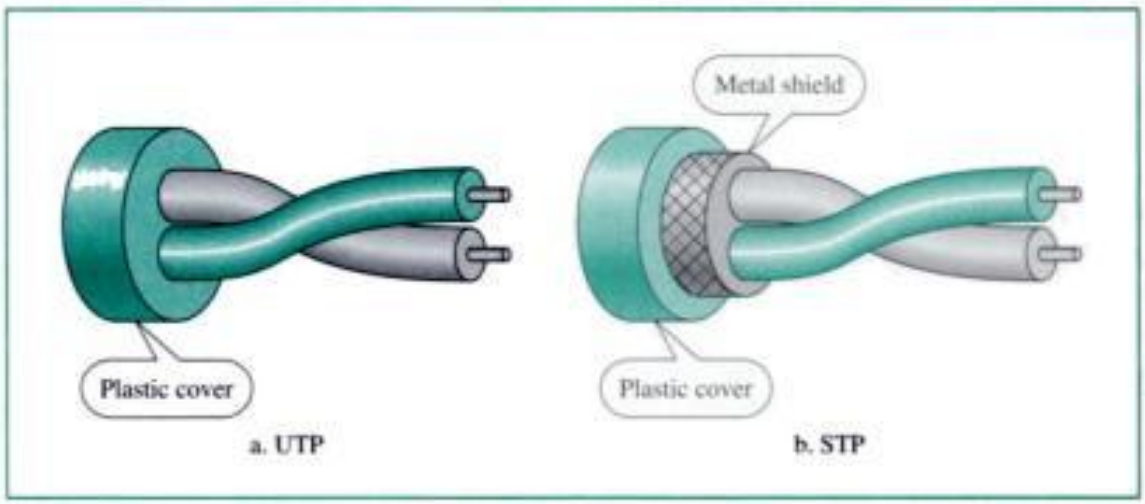

Categories

The Electronic Industries Association (EIA) has developed standards to classify unshielded twisted-pair cable into seven categories (categories 6 and 7 are still in the draft stage). Categories are determined by cable quality, with 1 as the lowest and 7 as the highest. Each EIA category is suitable for specific uses. Table 7.1 shows these categories.

Copyrighted material

Table 7.1 *Categories of unshielded twisted-pair cables*

Category	*Bandwidth*	*Data Rate*	*Digital/Analog*	*Use*
1	Very low	<100 Kbps	Analog	Telephone
2	<2 MHz	2 Mbps	Analog/digital	T-1 lines
3	16 MHz	10 Mbps	Digital	LANs
4	20 MHz	20 Mbps	Digital	LANs
5	100 MHz	100 Mbps	Digital	LANs
6 (draft)	200 MHz	200 Mbps	Digital	LANs
7 (draft)	600 MHz	600 Mbps	Digital	LANs

Connectors

The most common UTP connector is **RJ45** (RJ stands for Registered Jack), as shown in Figure 7.5. The RJ45 is a keyed connector, meaning the connector can be inserted in only one way.

Figure 7.5 *UTP connector*

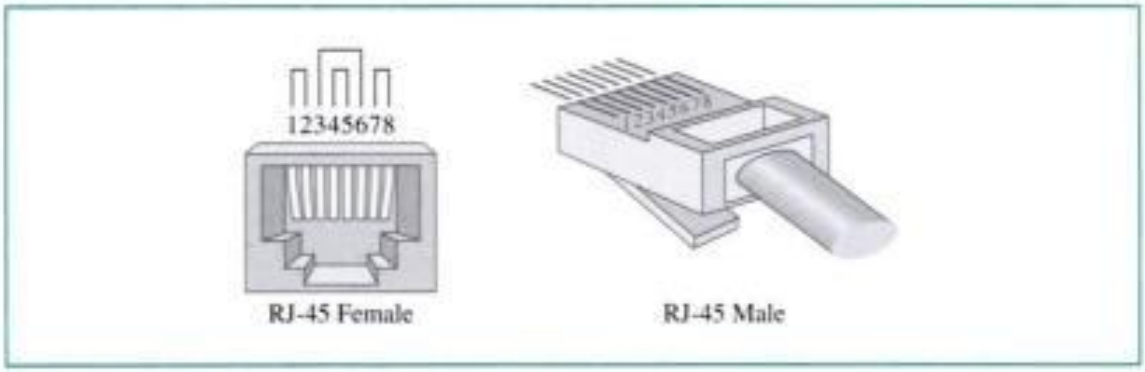

Performance

One way to measure the performance of twisted-pair cable is to compare attenuation versus frequency and distance. A twisted-pair cable can pass a wide range of frequencies. However, Figure 7.6 shows that with increasing frequency, the attenuation, measured in decibels per mile (dB/mi), sharply increases with frequencies above 100 KHz. Note that *gauge* is the measure of the thickness of the wire.

Applications

Twisted-pair cables are used in telephone lines to provide voice and data channels. The local loop—the line that connects subscribers to the central telephone office—is most commonly unshielded twisted-pair cables. We discuss telephone networks in Chapter 8.

The DSL lines that are used by the telephone companies to provide high data rate connections also use the high-bandwidth capability of unshielded twisted-pair cables. We discuss DSL technology in Chapter 9.

Local area networks, such as 10Base-T and 100Base-T, also use twisted-pair cables. We discuss these networks in Chapter 14.

Copyrighted material

Figure 7.6 *UTP performance*

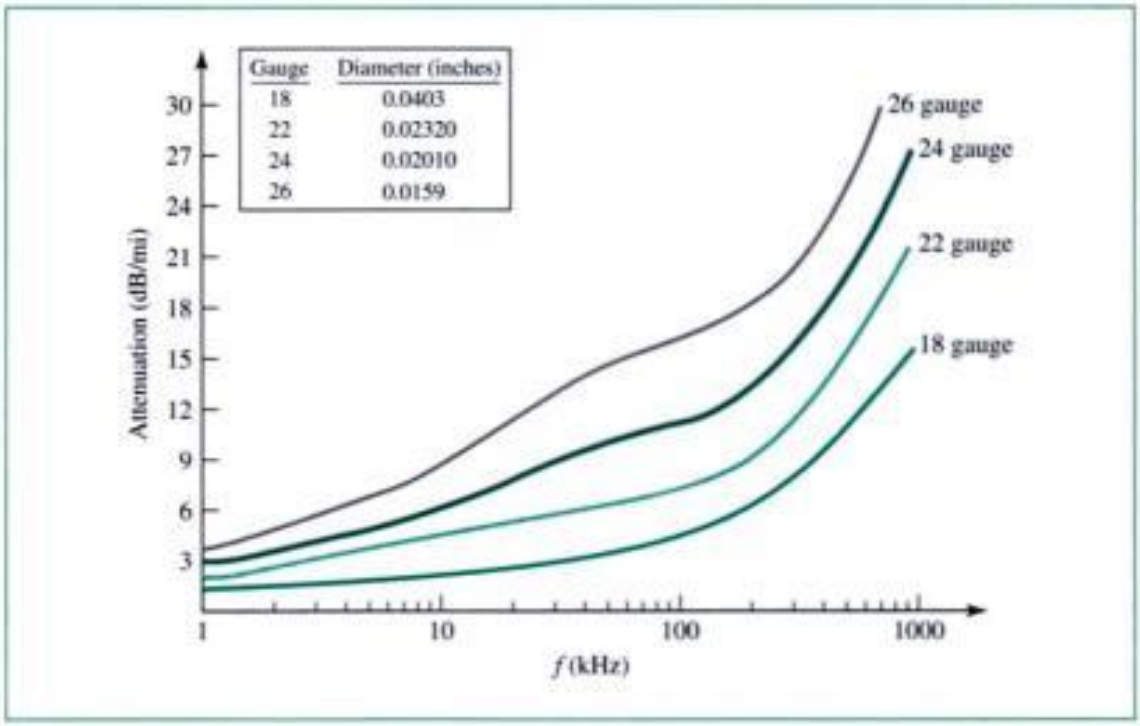

Coaxial Cable

Coaxial cable (or *coax*) carries signals of higher frequency ranges than twisted-pair cable, in part because the two media are constructed quite differently. Instead of having two wires, coax has a central core conductor of solid or stranded wire (usually copper) enclosed in an insulating sheath, which is, in turn, encased in an outer conductor of metal foil, braid, or a combination of the two. The outer metallic wrapping serves both as a shield against noise and as the second conductor, which completes the circuit. This outer conductor is also enclosed in an insulating sheath, and the whole cable is protected by a plastic cover (see Fig. 7.7).

Figure 7.7 *Coaxial cable*

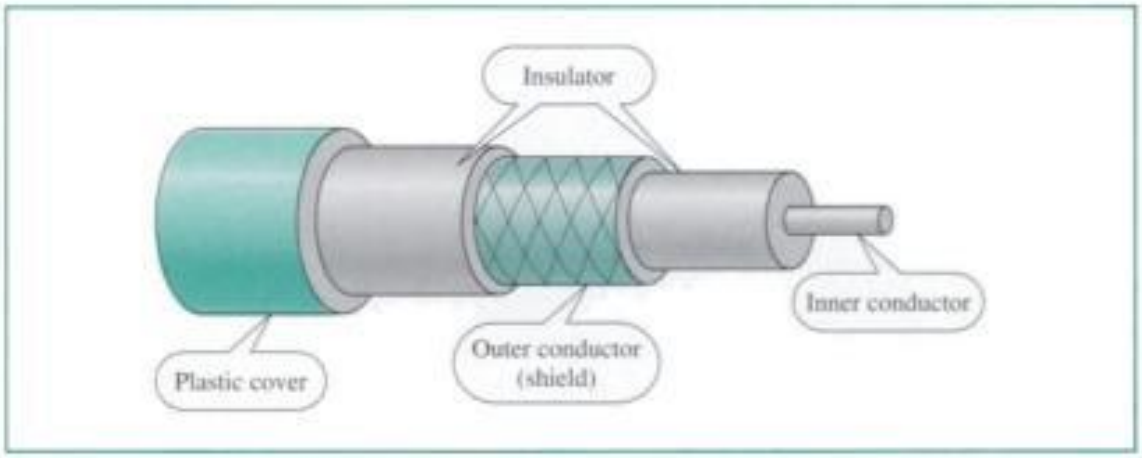

Copyrighted material

Coaxial Cable Standards

Coaxial cables are categorized by their radio government (RG) ratings. Each RG number denotes a unique set of physical specifications, including the wire gauge of the inner conductor, the thickness and type of the inner insulator, the construction of the shield, and the size and type of the outer casing. Each cable defined by RG ratings is adapted for a specialized function, as shown in Table 7.2.

Table 7.2 *Categories of coaxial cables*

Category	*Impedance*	*Use*
RG-59	75 Ω	Cable TV
RG-58	50 Ω	Thin Ethernet
RG-11	50 Ω	Thick Ethernet

Coaxial Cable Connectors

To connect coaxial cable to devices, we need coaxial connectors. The most common type of connector used today is the Bayone-Neill-Concelman, or BNC, connectors. Figure 7.8 shows three popular types of these connectors: the BNC connector, the BNC T connector, and the BNC terminator.

Figure 7.8 *BNC connectors*

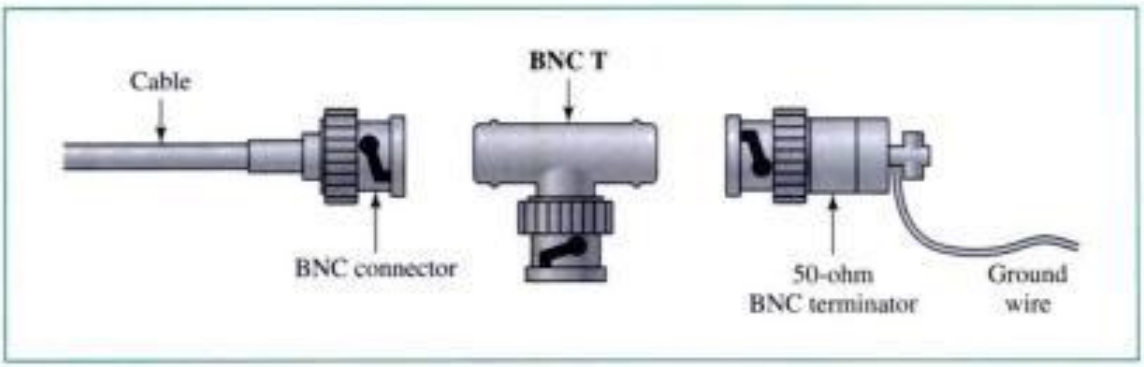

The **BNC connector** is used to connect the end of the cable to a device, such as a TV set. The BNC T connector is used in Ethernet networks (see Chapter 14) to branch out a cable for connection to a computer or other devices. The BNC terminator is used at the end of the cable to prevent the reflection of the signal.

Performance

As we did with twisted-pair cables, we can measure the performance of a coaxial cable. We notice from Figure 7.9 that the attenuation is much higher in coaxial cables than in twisted-pair cable. In other words, although coaxial cable has a much higher bandwidth, the signal weakens rapidly and needs the frequent use of repeaters.

Applications

The use of coaxial cable started in analog telephone networks where a single coaxial network could carry 10,000 voice signals. Later it was used in digital telephone networks

Copyrighted material

Figure 7.9 *Coaxial cable performance*

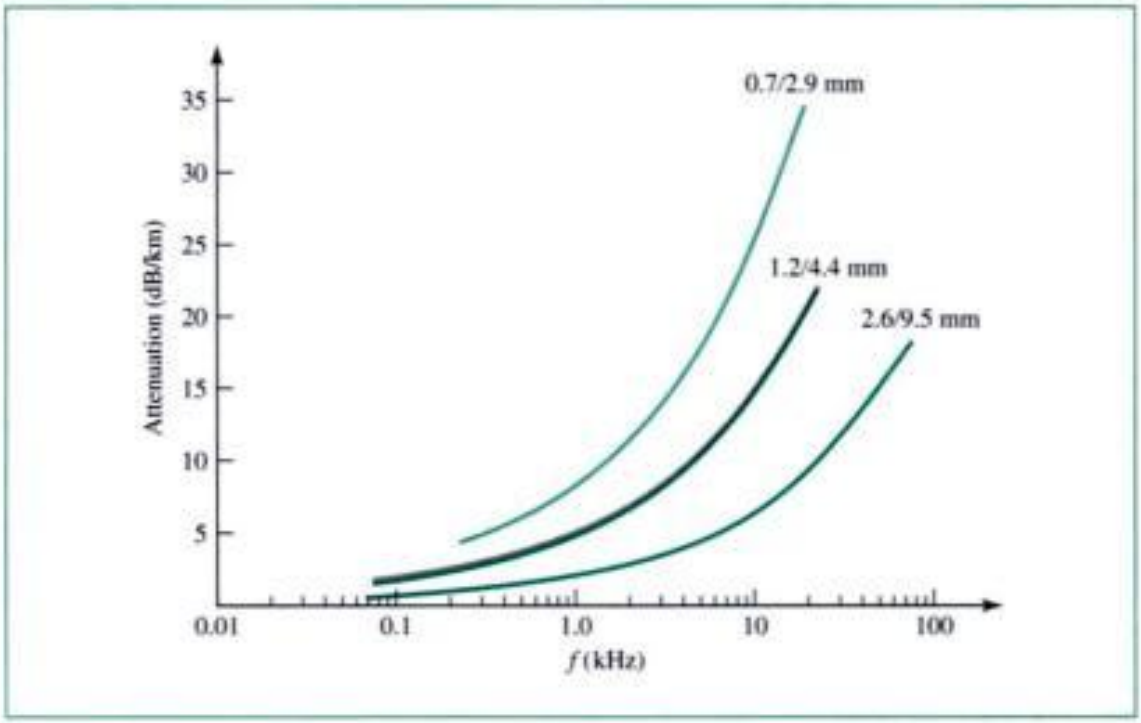

where a single coaxial cable could carry digital data up to 600 Mbps. However, coaxial cable in telephone networks has largely been replaced today with fiber-optic cable.

Cable TV networks (see Chapter 9) also used coaxial cables. In the traditional cable TV network, the entire network used coaxial cable. Later, however, cable TV providers replaced most of the network with fiber-optic cable; hybrid networks use coaxial cable only at the network boundaries, near the consumer premises. Cable TV uses RG-59 coaxial cable.

Another common application of coaxial cable is in traditional Ethernet LANs (see Chapter 14). Because of its high bandwidth, and consequently high data rate, coaxial cable was chosen for digital transmission in early Ethernet LANs. 10Base-2, or Thin Ethernet, uses RG-58 coaxial cable with BNC connectors to transmit data at 10 Mbps with a range of 185 m. 10Base5, or Thick Ethernet, uses RG-11 (thick coaxial cable) to transmit 10 Mbps with a range of 5000 m. Thick Ethernet has specialized connectors.

Fiber-Optic Cable

A fiber-optic cable is made of glass or plastic and transmits signals in the form of light. To understand optical fiber, we first need to explore several aspects of the nature of light.

Light travels in a straight line as long as it is moving through a single uniform substance. If a ray of light traveling through one substance suddenly enters another (more or less dense), the ray changes direction. Figure 7.10 shows how a ray of light changes direction when going from a more dense to a less dense substance.

As the figure shows, if the **angle of incidence** (the angle the ray makes with the line perpendicular to the interface between the two substances) is less than the **critical angle,** the ray **refracts** and moves closer to the surface. If the angle of incidence is equal to the critical angle, the light bends along the interface. If the angle is greater than

Copyrighted material

Figure 7.10 *Bending of light ray*

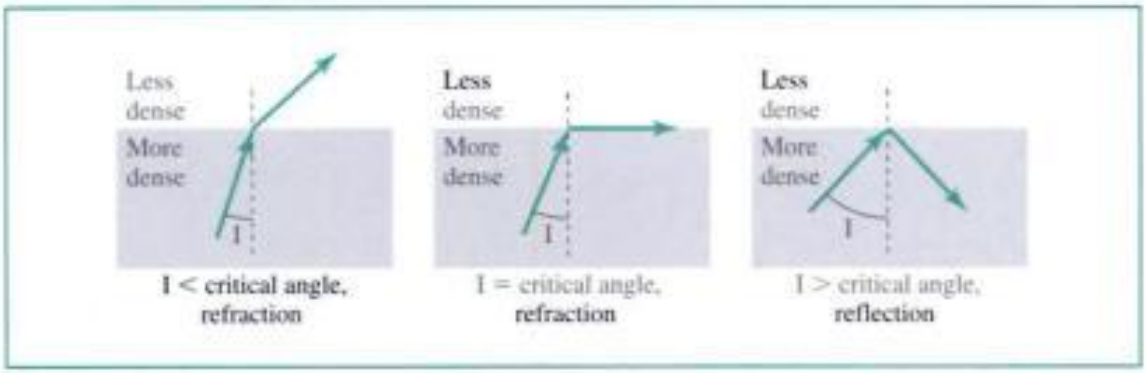

the critical angle, the ray **reflects** (makes a turn) and travels again in the denser substance. Note that the critical angle is a property of the substance, and its value is different from one substance to another.

Optical fibers use reflection to guide light through a channel. A glass or plastic **core** is surrounded by a **cladding** of less dense glass or plastic. The difference in density of the two materials must be such that a beam of light moving through the core is reflected off the cladding instead of being refracted into it. See Figure 7.11.

Figure 7.11 *Optical fiber*

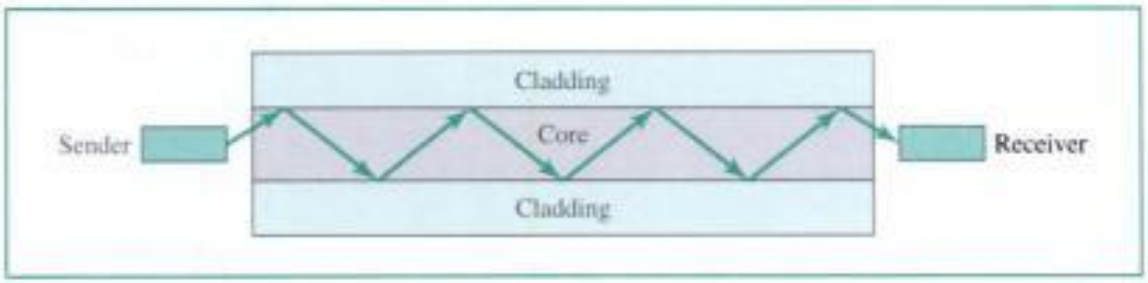

Propagation Modes

Current technology supports two modes (multimode and single mode) for propagating light along optical channels, each requiring fiber with different physical characteristics. Multimode can be implemented in two forms: step-index or graded-index (see Fig. 7.12).

Multimode Multimode is so named because multiple beams from a light source move through the core in different paths. How these beams move within the cable depends on the structure of the core, as shown in Figure 7.13.

In **multimode step-index fiber,** the density of the core remains constant from the center to the edges. A beam of light moves through this constant density in a straight line until it reaches the interface of the core and the cladding. At the interface, there is an abrupt change to a lower density that alters the angle of the beam's motion. The term *step index* refers to the suddenness of this change.

A second type of fiber, called **multimode graded-index fiber,** decreases this distortion of the signal through the cable. The word *index* here refers to the index of refraction.

Copyrighted material

Figure 7.12 *Propagation modes*

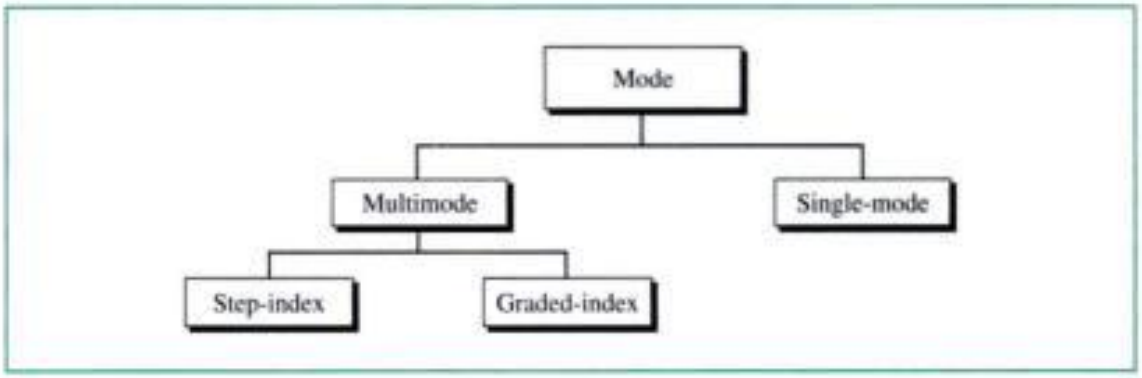

Figure 7.13 *Modes*

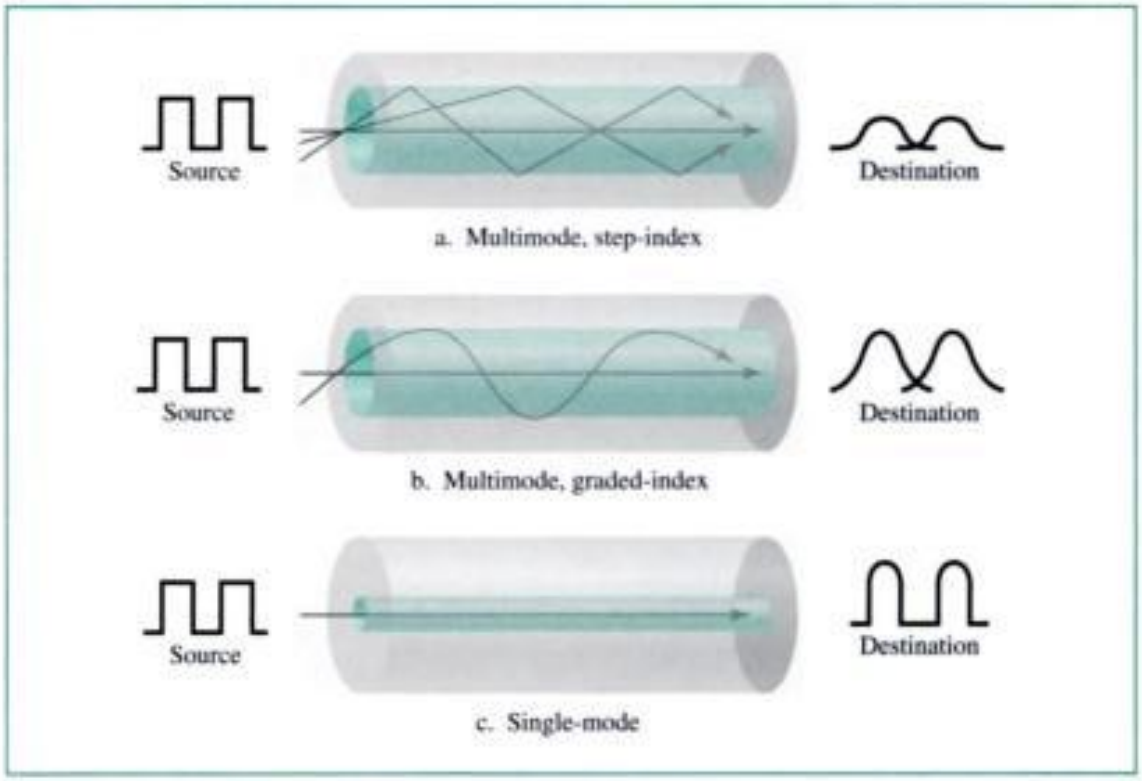

As we saw above, the index of refraction is related to density. A graded-index fiber, therefore, is one with varying densities. Density is highest at the center of the core and decreases gradually to its lowest at the edge. Figure 7.13 shows the impact of this variable density on the propagation of light beams.

Single-Mode Single-mode uses step-index fiber and a highly focused source of light that limits beams to a small range of angles, all close to the horizontal. The **single-mode fiber** itself is manufactured with a much smaller diameter than that of multimode fiber, and with substantially lower density (index of refraction). The decrease in density results in a critical angle that is close enough to 90° to make the propagation of beams almost horizontal. In this case, propagation of different beams is almost identical, and

Copyrighted material

delays are negligible. All the beams arrive at the destination "together" and can be recombined with little distortion to the signal (see Fig. 7.13).

Fiber Sizes

Optical fibers are defined by the ratio of the diameter of their core to the diameter of their cladding, both expressed in micrometers. The common sizes are shown in Table 7.3. The last size listed is only for single-mode.

Table 7.3 *Fiber types*

Type	*Core (μm)*	*Cladding (μm)*	*Mode*
50/125	50	125	Multimode, graded-index
62.5/125	62.5	125	Multimode, graded-index
100/125	100	125	Multimode, graded-index
7/125	7	125	Single-mode

Cable Composition

Figure 7.14 shows the composition of a typical fiber-optic cable.

Figure 7.14 *Fiber construction*

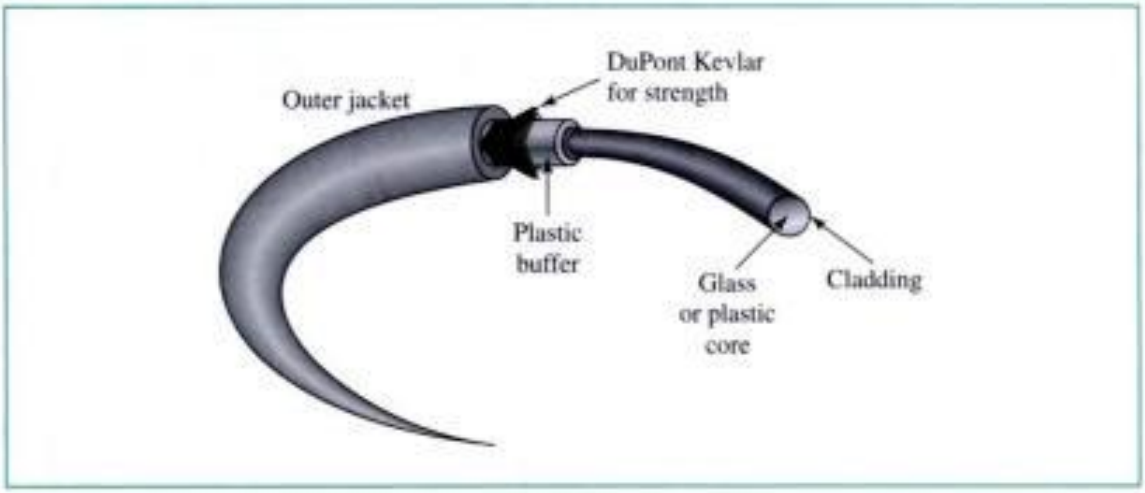

The outer jacket is made of either PVC or Teflon. Inside the jacket are Kevlar strands to strengthen the cable. Kevlar is a strong material used in the fabrication of bulletproof vests. Below the Kevlar is another plastic coating to cushion the fiber. The fiber is at the center of the cable, and it consists of cladding and core.

Fiber-Optic Cable Connectors

Fiber-optic cables use three different types of connectors, as shown in Figure 7.15.

The **subscriber channel (SC) connector** is used in cable TV. It uses a push/pull locking system. The **straight-tip (ST) connector** is used for connecting cable to

Copyrighted material

Figure 7.15 *Fiber-optic cable connectors*

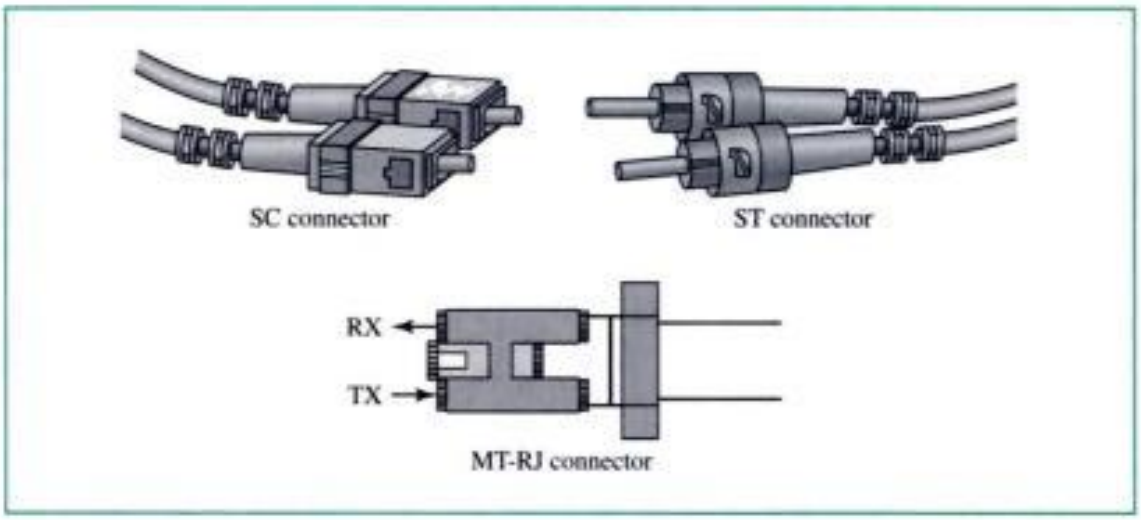

networking devices. It uses a bayonet locking system and is more reliable than SC. **MT-RJ** is a new connector with the same size as RJ45.

Performance

The measurement of attenuation versus wavelength shows a very interesting phenomenon in fiber-optic cable. Attenuation is flatter than in the case of twisted-pair cable and coaxial cable. The performance is such that we need fewer (actually 10 times less) repeaters when we use fiber-optic cable.

Figure 7.16 *Optical fiber performance*

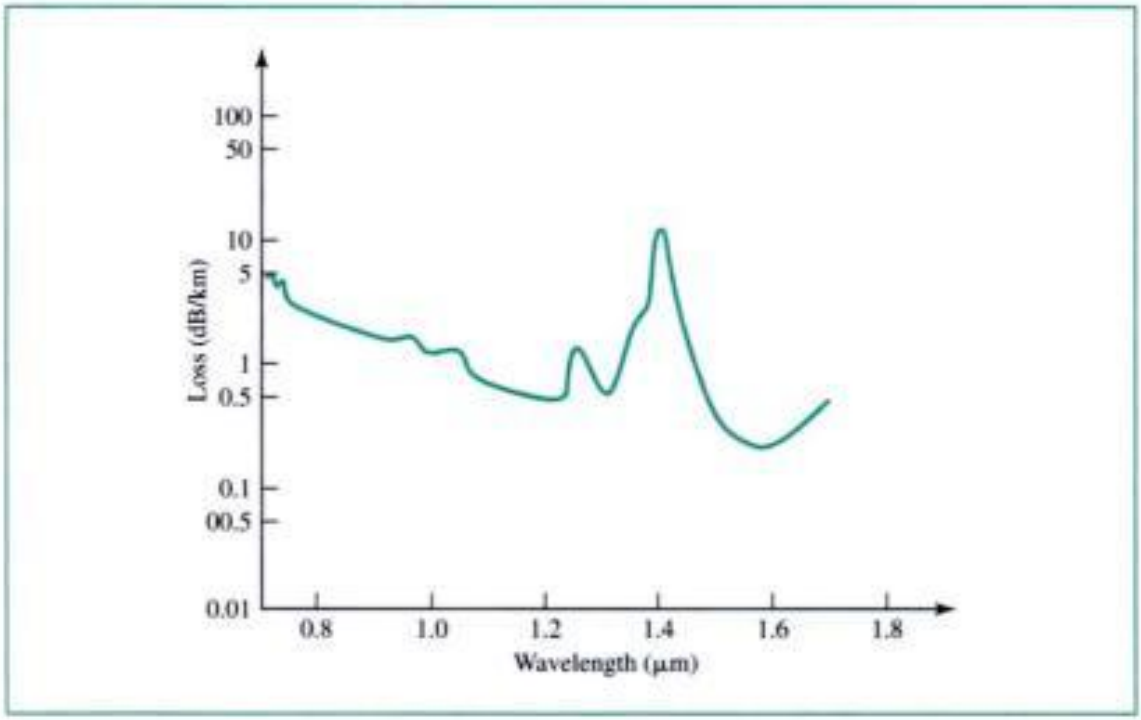

Copyrighted material

Applications

Fiber-optic cable is often found in backbone networks because its wide bandwidth is cost-effective. Today, with WDM, we can transfer data at a rate of 1600 Gbps. The SONET network that we discuss in Chapter 9 provides such a backbone.

Some cable TV companies use a combination of optical fiber and coaxial cable, thus creating a hybrid network. Optical fiber provides the backbone structure while coaxial cable provides the connection to the user premises. This is a cost-effective configuration since the narrow bandwidth requirement at the user end does not justify the use of optical fiber.

Local area networks such as 100Base-FX network (Fast Ethernet) and 1000Base-X also use fiber-optic cable.

Advantages and Disadvantages of Optical Fiber

Advantages Fiber-optic cable has several advantages over metallic cable (twisted-pair or coaxial).

- **Higher bandwidth.** Fiber-optic cable can support dramatically higher bandwidths (and hence data rates) than either twisted-pair or coaxial cable. Currently, data rates and bandwidth utilization over fiber-optic cable are limited not by the medium but by the signal generation and reception technology available.
- **Less signal attenuation.** Fiber-optic transmission distance is significantly greater than that of other guided media. A signal can run for 50 km without requiring regeneration. We need repeaters every 5 km for coaxial or twisted-pair cable.
- **Immunity to electromagnetic interference.** Electromagnetic noise cannot affect fiber-optic cables.
- **Resistance to corrosive materials.** Glass is more resistant to corrosive materials than copper.
- **Light weight.** Fiber-optic cables are much lighter than copper cables.
- **More immune to tapping.** Fiber-optic cables are definitely more immune to tapping than copper cables. Copper cables create antennas that can easily be tapped.

Disadvantages There are some disadvantages in the use of optical fiber.

- **Installation/maintenance.** Fiber-optic cable is a relatively new technology. Installation and maintenance need expertise that is not yet available everywhere.
- **Unidirectional.** Propagation of light is unidirectional. If we need bidirectional communication, two fibers are needed.
- **Cost.** The cable and the interfaces are relatively more expensive than those of other guided media. If the demand for bandwidth is not high, often the use of optical fiber cannot be justified.

7.2 UNGUIDED MEDIA: WIRELESS

Unguided media transport electromagnetic waves without using a physical conductor. This type of communication is often referred to as **wireless communication.** Signals are normally broadcast through air and thus are available to anyone who has a device capable of receiving them.

Copyrighted material

Figure 7.17 shows part of the electromagnetic spectrum, ranging from 3 KHz to 900 THz, used for wireless communication.

Figure 7.17 *Electromagnetic spectrum for wireless communication*

Unguided signals can travel from the source to destination in several ways. There is ground propagation, sky propagation, and line-of-sight propagation, as shown in Figure 7.18.

Figure 7.18 *Propagation methods*

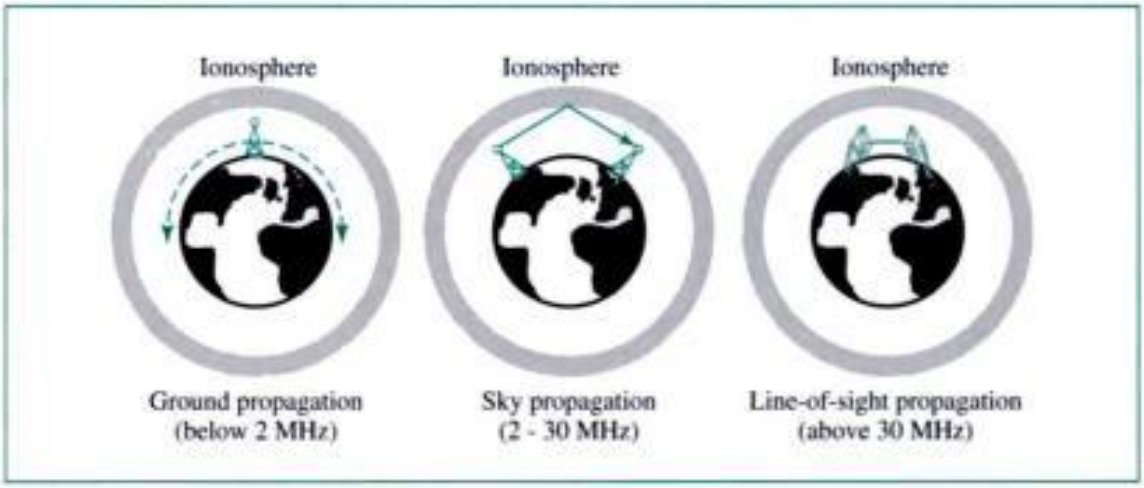

In **ground propagation,** radio waves travel through the lowest portion of the atmosphere, hugging the earth. These low-frequency signals emanate in all directions from the transmitting antenna and follow the curvature of the planet. Distance depends on the amount of power in the signal: The greater the power, the greater the distance. In **sky propagation,** higher-frequency radio waves radiate upward into the ionosphere (the layer of atmosphere where particles exist as ions) where they are reflected back to earth. This type of transmission allows for greater distances with lower power output. In **line-of-sight propagation,** very high-frequency signals are transmitted in straight lines directly from antenna to antenna. Antennas must be directional, facing each other, and either tall enough or close enough together not to be affected by the curvature of the earth. Line-of-sight propagation is tricky because radio transmissions cannot be completely focused.

Copyrighted material

The section of the electromagnetic spectrum defined as radio waves and microwaves is divided into eight ranges, called *bands*, each regulated by government authorities. These bands are rated from very low frequency (VLF) to extremely high frequency (EHF). Table 7.4 lists these bands, their ranges, propagation methods, and some applications.

Table 7.4 *Bands*

Band	*Range*	*Propagation*	*Application*
VLF (Very low frequency)	3–30 KHz	Ground	Long-range radio navigation
LF (Low frequency)	30–300 KHz	Ground	Radio beacons and navigational locators
MF (Middle frequency)	300 KHz–3 MHz	Sky	AM radio
HF (High frequency)	3–30 MHz	Sky	Citizens band (CB), ship/aircraft communication
VHF (Very high frequency)	30–300 MHz	Sky and line-of-sight	VHF TV, FM radio
UHF (Ultra high frequency)	300 MHz–3 GHz	Line-of-sight	UHF TV, cellular phones, paging, satellite
SHF (Super high frequency)	3–30 GHz	Line-of-sight	Satellite communication
EHF (Extremely high frequency)	30–300 GHz	Line-of-sight	Radar, satellite

We can divide wireless transmission into three broad groups: radio waves, microwaves, and infrared waves. See Figure 7.19.

Figure 7.19 *Wireless transmission waves*

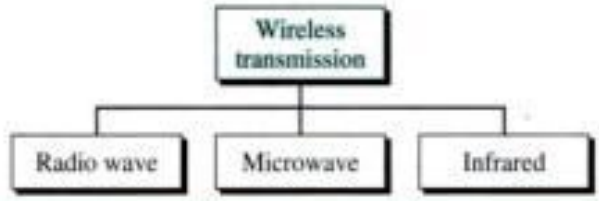

Radio Waves

Although there is no clear-cut demarcation between radio waves and microwaves, electromagnetic waves ranging in frequencies between 3 KHz and 1 GHz are normally called **radio waves;** waves ranging in frequencies between 1 and 300 GHz are called

Copyrighted material

microwaves. However, the behavior of the waves, rather than the frequencies, is a better criterion for classification.

Radio waves, for the most part, are omnidirectional. When an antenna transmits radio waves, they are propagated in all directions. This means that the sending and receiving antennas do not have to be aligned. A sending antenna can send waves that can be received by any receiving antenna. The omnidirectional property has a disadvantage, too. The radio waves transmitted by one antenna are susceptible to interference by another antenna that may send signals using the same frequency or band.

Radio waves, particularly those waves that propagate in the sky mode, can travel long distances. This makes radio waves a good candidate for long-distance broadcasting such as AM radio.

Radio waves, particularly those of low and medium frequencies, can penetrate walls. This characteristic can be both an advantage and a disadvantage. It is an advantage because, for example, an AM radio can receive signals inside a building. It is a disadvantage because we cannot isolate a communication to just inside or outside a building. The radio wave band is relatively narrow, just under 1 GHz, compared to the microwave band. When this band is divided into subbands, the sidebands are also narrow, leading to a low data rate for digital communications.

Almost the entire band is regulated by authorities (e.g., the FCC in the United States). Using any part of the band requires permission from the authorities.

Omnidirectional Antenna

Radio waves use **omnidirectional antennas** that send out signals in other directions. Based on the wavelength, strength, and the purpose of transmission, we can have several types of antennas. Figure 7.20 shows an omnidirectional antenna.

Figure 7.20 *Omnidirectional antennas*

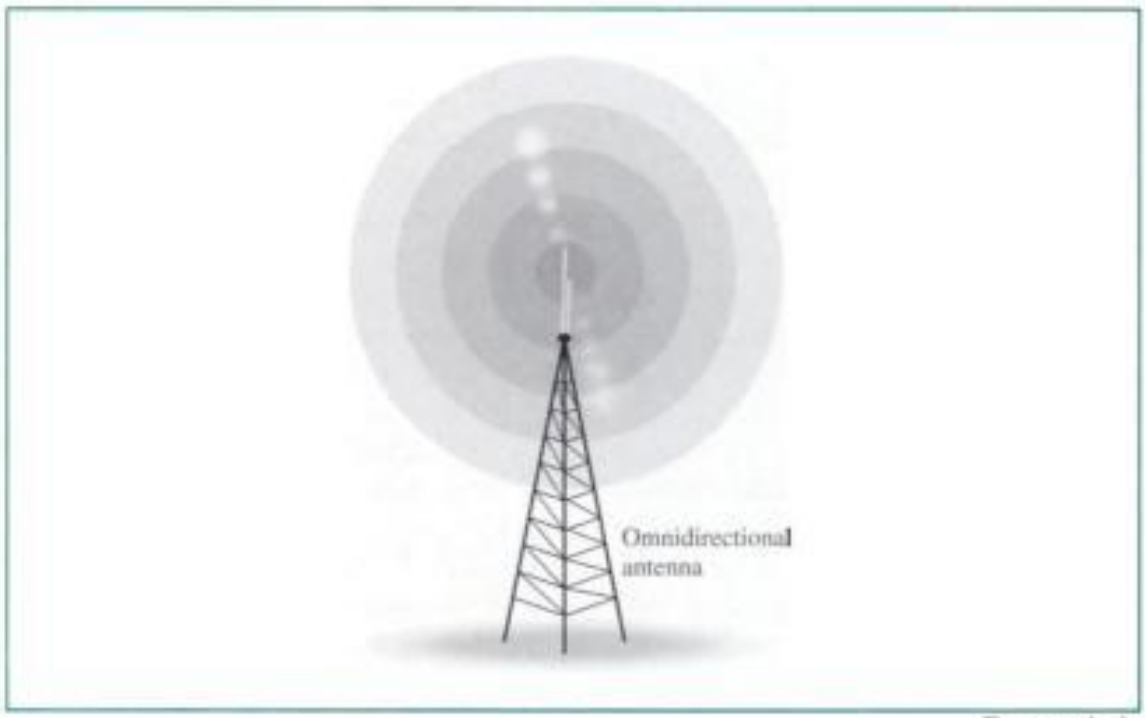

Copyrighted material

Applications

The omnidirectional characteristics of radio waves make them useful for multicasting, in which there is one sender but many receivers. AM and FM radio, television, maritime radio, cordless phones, and paging are examples of multicasting.

Radio waves are used for multicast communications, such as radio and television, and paging systems.

Microwaves

Electromagnetic waves having frequencies between 1 and 300 GHz are called microwaves.

Microwaves are unidirectional. When an antenna transmits microwave waves, they can be narrowly focused. This means that the sending and receiving antennas need to be aligned. The unidirectional property has an obvious advantage. A pair of antennas can be aligned without interfering with another pair of aligned antennas.

Microwave propagation is line-of-sight. Since the towers with the mounted antennas need to be in direct sight of each other, towers that are far apart need to be very tall. The curvature of the earth as well as other blocking obstacles do not allow two short towers to communicate using microwaves. Repeaters are often needed for long-distance communication.

Very high-frequency microwaves cannot penetrate walls. This characteristic can be a disadvantage if receivers are inside buildings.

The microwave band is relatively wide, almost 299 GHz. Therefore wider subbands can be assigned, and a high data rate is possible

Use of certain portions of the band requires permission from authorities.

Unidirectional Antenna

Microwaves need **unidirectional antennas** that send out signals in one direction. Two types of antennas are used for microwave communications: the parabolic dish and the horn (see Fig. 7.21).

A **parabolic dish antenna** is based on the geometry of a parabola: Every line parallel to the line of symmetry (line of sight) reflects off the curve at angles such that all the lines intersect in a common point called the focus. The parabolic dish works as a funnel, catching a wide range of waves and directing them to a common point. In this way, more of the signal is recovered than would be possible with a single-point receiver.

Outgoing transmissions are broadcast through a horn aimed at the dish. The microwaves hit the dish and are deflected outward in a reversal of the receipt path.

A **horn antenna** looks like a gigantic scoop. Outgoing transmissions are broadcast up a stem (resembling a handle) and deflected outward in a series of narrow parallel beams by the curved head. Received transmissions are collected by the scooped shape of the horn, in a manner similar to the parabolic dish, and are deflected down into the stem.

Copyrighted material

Figure 7.21 *Unidirectional antennas*

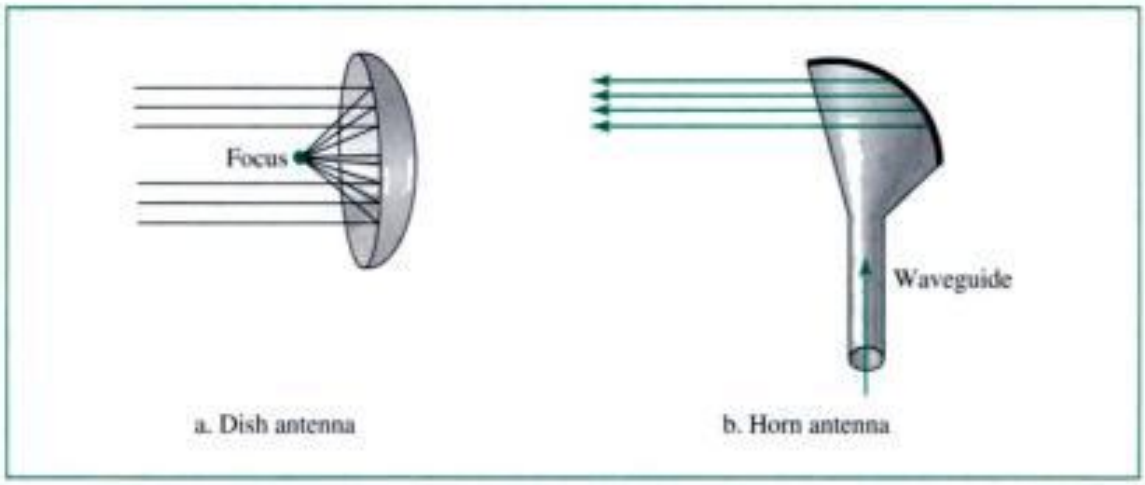

Applications

Microwaves, due to their unidirectional properties, are very useful when unicasting (one-to-one) communication is needed between the sender and the receiver. They are used in cellular phones (Chapter 17), satellite networks (Chapter 17), and wireless LANs (Chapter 15).

Microwaves are used for unicast communication such as cellular telephones, satellite networks, and wireless LANs.

Infrared

Infrared signals, with frequencies from 300 GHz to 400 THz (wavelengths from 1 mm to 770 nm), can be used for short-range communication. Infrared signals, having high frequencies, cannot penetrate walls. This advantageous characteristic prevents interference between one system and another; a short-range communication system in one room cannot be affected by another system in the next room. When we use our infrared remote control, we do not interfere with the use of the remote by our neighbors. However, this same characteristic makes infrared signals useless for long-range communication. In addition, we cannot use infrared waves outside a building because the sun's rays contain infrared waves that can interfere with the communication.

Applications

The infrared band, almost 400 THz, has an excellent potential for data transmission. Such a wide bandwidth can be used to transmit digital data with a very high data rate. The Infrared Data Association (IrDA), an association for sponsoring the use of infrared waves, has established standards for using these signals for communication between devices such as keyboards, mice, PCs, and printers. For example, some manufacturers provide a special port called the **IrDA** port that allows a wireless keyboard

Copyrighted material

to communicate with a PC. The standard originally defined a data rate of 75 Kbps for a distance up to 8 m. The recent standard defines a data rate of 4 Mbps.

Infrared signals defined by IrDA transmit through line of sight; the IrDA port on the keyboard needs to point to the PC for transmission to occur.

Infrared signals can be used for short-range communication in a closed area using line-of-sight propagation.

7.3 KEY TERMS

angle of incidence
BNC connector
cladding
coaxial cable
core
critical angle
electromagnetic spectrum
fiber-optic cable
ground propagation
guided media
horn antenna
infrared wave
IrDA port
line-of-sight propagation
microwave
MT-RJ
multimode graded-index fiber
multimode step-index fiber
omnidirectional antenna
optical fiber
parabolic dish antenna
radio wave
reflection
refraction
RG number
RJ45
shielded twisted-pair (STP)
single-mode fiber
sky propagation
straight-tip (ST) connector
subscriber channel (SC) connector
transmission media
twisted-pair cable
unguided medium
unidirectional antenna
unshielded twisted-pair (UTP)
wireless communication

7.4 SUMMARY

- Transmission media lie below the physical layer.
- A guided medium provides a physical conduit from one device to another.
- Twisted-pair cable, coaxial cable, and optical fiber are the most popular types of guided media.
- Twisted-pair cable consists of two insulated copper wires twisted together. Twisting allows each wire to have approximately the same noise environment.
- Twisted-pair cable is used in telephone lines for voice and data communications.
- Coaxial cable has the following layers (starting from the center): a metallic rod-shaped inner conductor, an insulator covering the rod, a metallic outer conductor (shield), an insulator covering the shield, and a plastic cover.

Copyrighted material

- Coaxial cable can carry signals of higher frequency ranges than twisted-pair cable.
- Coaxial cable is used in cable TV networks and traditional Ethernet LANs.
- Fiber-optic cables are composed of a glass or plastic inner core surrounded by cladding, all encased in an outside jacket.
- Fiber-optic cables carry data signals in the form of light. The signal is propagated along the inner core by reflection.
- Fiber-optic transmission is becoming increasingly popular due to its noise resistance, low attenuation, and high-bandwidth capabilities.
- Signal propagation in optical fibers can be multimode (multiple beams from a light source) or single-mode (essentially one beam from a light source).
- In multimode step-index propagation, the core density is constant and the light beam changes direction suddenly at the interface between the core and the cladding.
- In multimode graded-index propagation, the core density decreases with distance from the center. This causes a curving of the light beams.
- Fiber-optic cable is used in backbone networks, cable TV networks, and Fast Ethernet networks.
- Unguided media (usually air) transport electromagnetic waves without the use of a physical conductor.
- Wireless data are transmitted through ground propagation, sky propagation, and line-of-sight propagation.
- Wireless data can be classified as radio waves, microwaves, or infrared waves.
- Radio waves are omnidirectional. The radio wave band is under government regulation.
- Microwaves are unidirectional; propagation is line of sight. Microwaves are used for cellular phone, satellite, and wireless LAN communications.
- The parabolic dish antenna and the horn antenna are used for transmission and reception of microwaves.
- Infrared waves are used for short-range communications such as those between a PC and a peripheral device.

7.5 PRACTICE SET

Review Questions

1. Is the transmission medium a part of the physical layer? Why or why not?
2. Name the two major categories of transmission media.
3. How do guided media differ from unguided media?
4. What are the three major classes of guided media?
5. What is the form of the signal in twisted-pair cable and coaxial cable? How does this differ from the signal in fiber-optic cable?
6. Give a use for each class of guided media.

Copyrighted material

7. What is the major advantage of shielded twisted-pair over unshielded twisted-pair cable?
8. What is the significance of the twisting in twisted-pair cable?
9. Why is coaxial cable superior to twisted-pair cable?
10. What is reflection?
11. Discuss the modes for propagating light along optical channels.
12. What is the purpose of cladding in an optical fiber? Discuss its density relative to the core.
13. Name the advantages of optical fiber over twisted-pair and coaxial cable.
14. What are the disadvantages of optical fiber as a transmission medium?
15. Name the three ways for wireless data to be propagated.
16. Give a use for each class of unguided media.
17. How does sky propagation differ from line-of-sight propagation?
18. What is the difference between omnidirectional waves and unidirectional waves?
19. What is an IrDA port?

Multiple-Choice Questions

20. Transmission media are usually categorized as _____.
    a. Fixed or unfixed
    b. Guided or unguided
    c. Determinate or indeterminate
    d. Metallic or nonmetallic
21. Transmission media are closest to the _____ layer.
    a. Physical
    b. Network
    c. Transport
    d. Application
22. Category 1 UTP cable is most often used in _____ networks.
    a. Fast Ethernet
    b. Traditional Ethernet
    c. Infrared
    d. Telephone
23. BNC connectors are used by _____ cables.
    a. UTP
    b. STP
    c. Coaxial
    d. Fiber-optic
24. _____ cable consists of an inner copper core and a second conducting outer sheath.
    a. Twisted-pair
    b. Coaxial

Copyrighted material

c. Fiber-optic
d. Shielded twisted-pair

25. In fiber optics, the signal source is _____ waves.
a. Light
b. Radio
c. Infrared
d. Very low-frequency

26. Smoke signals are an example of communication through _____.
a. A guided medium
b. An unguided medium
c. A refractive medium
d. A small or large medium

27. Which of the following primarily uses guided media?
a. Cellular telephone system
b. Local telephone system
c. Satellite communications
d. Radio broadcasting

28. Which of the following is not a guided medium?
a. Twisted-pair cable
b. Coaxial cable
c. Fiber-optic cable
d. Atmosphere

29. In an environment with many high-voltage devices, the best transmission medium would be _____.
a. Twisted-pair cable
b. Coaxial cable
c. Optical fiber
d. The atmosphere

30. What is the major factor that makes coaxial cable less susceptible to noise than twisted-pair cable?
a. Inner conductor
b. Diameter of cable
c. Outer conductor
d. Insulating material

31. The RG number gives us information about _____.
a. Twisted pairs
b. Coaxial cables
c. Optical fibers
d. All the above

Copyrighted material

32. In an optical fiber, the inner core is _____ the cladding.
    a. Denser than
    b. Less dense than
    c. The same density as
    d. Another name for
33. The inner core of an optical fiber is _____ in composition.
    a. Glass or plastic
    b. Copper
    c. Bimetallic
    d. Liquid
34. Optical fibers, unlike wire media, are highly resistant to _____.
    a. High-frequency transmission
    b. Low-frequency transmission
    c. Electromagnetic interference
    d. Refraction
35. When a beam of light travels through media of two different densities, if the angle of incidence is greater than the critical angle, _____ occurs.
    a. Reflection
    b. Refraction
    c. Incidence
    d. Criticism
36. When the angle of incidence is _____ the critical angle, the light beam bends along the interface.
    a. More than
    b. Less than
    c. Equal to
    d. None of the above
37. In _____ propagation, the beam of propagated light is almost horizontal, and the low-density core has a small diameter compared to the cores of the other propagation modes.
    a. Multimode step-index
    b. Multimode graded-index
    c. Multimode single-index
    d. Single-mode
38. _____ is the propagation method subject to the greatest distortion.
    a. Multimode step-index
    b. Multimode graded-index
    c. Multimode single-index
    d. Single-mode

Copyrighted material

39. In _____ propagation, the core is of varying densities.
    a. Multimode step-index
    b. Multimode graded-index
    c. Multimode single-index
    d. Single-mode
40. When we talk about unguided media, usually we are referring to _____.
    a. Metallic wires
    b. Nonmetallic wires
    c. The air
    d. None of the above
41. Radio wave and microwave frequencies range from _____.
    a. 3 to 300 KHz
    b. 300 KHz to 3 GHz
    c. 3 KHz to 300 GHz
    d. 3 KHz to 3000 GHz
42. In _____ propagation, low-frequency radio waves hug the earth.
    a. Ground
    b. Sky
    c. Line of sight
    d. Space
43. The VLF and LF bands use _____ propagation for communications.
    a. Ground
    b. Sky
    c. Line of sight
    d. Space
44. A parabolic dish antenna is a(n) _____ antenna.
    a. Omnidirectional
    b. Bidirectional
    c. Unidirectional
    d. Horn
45. The _____ is an association that sponsors the use of infrared waves.
    a. IrDA
    b. EIA
    c. FCC
    d. PUD

Exercises

46. A beam of light moves from one medium to another, less dense medium. The critical angle is 60°. Draw the path of the light through both media when the

Copyrighted material

angle of incidence is

a. 40°

b. 50°

c. 60°

d. 70°

e. 80°

47. A twisted-pair cable has an attenuation of 2 dB/km at 1 KHz. What is the attenuation for 20 km?

48. How can we infer from Figure 7.6 that the bandwidth of a twisted-pair cable is related to distance?

49. How can we infer from Figure 7.9 that the bandwidth of a coaxial cable is related to distance?

50. Can we infer from Figure 7.16 that the bandwidth of a fiber is related to distance?

51. If the speed of light in fiber is 2×10^8 m/sec, what is the bandwidth of a fiber that passes light from 1000 nm to 1500 nm without significant loss in magnitude?

Copyrighted material

CHAPTER 8

Circuit Switching and Telephone Network

Whenever we have multiple devices, we have the problem of how to connect them to make one-to-one communication possible. One solution is to install a **point-to-point connection** between each pair of devices (a mesh topology) or between a central device and every other device (a star topology). These methods, however, are impractical and wasteful when applied to very large networks. The number and length of the links require too much infrastructure to be cost-efficient, and the majority of those links would be idle most of the time. Imagine a network of six devices: A, B, C, D, E, and F. If device A has point-to-point links to devices B, C, D, E, and F, then when only A and B are connected, the links connecting A to each of the other devices are idle and wasted.

Other topologies employing multipoint connections, such as a bus, are ruled out because the distances between devices and the total number of devices increase beyond the capacities of the media and equipment.

A better solution is switching. A switched network consists of a series of interlinked nodes, called **switches.** Switches are hardware and/or software devices capable of creating temporary connections between two or more devices linked to the switch but not to each other. In a switched network, some of these nodes are connected to the communicating devices. Others are used only for routing.

Traditionally, three methods of switching have been important: circuit switching, packet switching, and message switching.

In this chapter, we discuss circuit switching, which normally takes place in the physical layer. We then discuss an application of circuit switching, the telephone network.

8.1 CIRCUIT SWITCHING

Circuit switching creates a direct physical connection between two devices such as phones or computers. For example, in Figure 8.1, instead of point-to-point connections between the three telephones on the left (A, B, and C) to the four telephones on the right (D, E, F, and G), requiring 12 links, we can use four switches to reduce the number and the total length of the links. In Figure 8.1, telephone A is connected through switches I,

Copyrighted material

II, and III to telephone D. By moving the levers of the switches, any telephone on the left can be connected to any telephone on the right.

Figure 8.1 *Circuit-switched network*

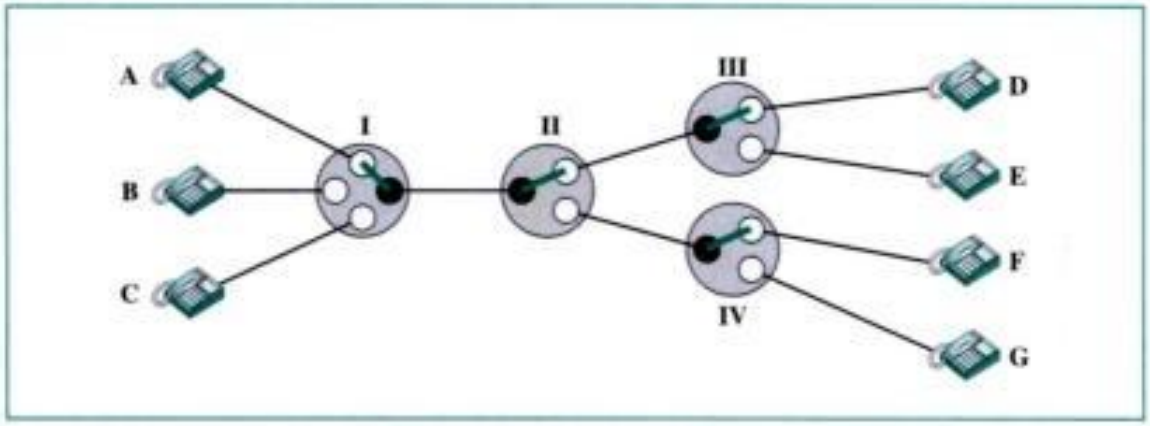

A circuit switch is a device with n inputs and m outputs that creates a temporary connection between an input link and an output link (see Fig. 8.2). The number of inputs does not have to match the number of outputs.

Figure 8.2 *A circuit switch*

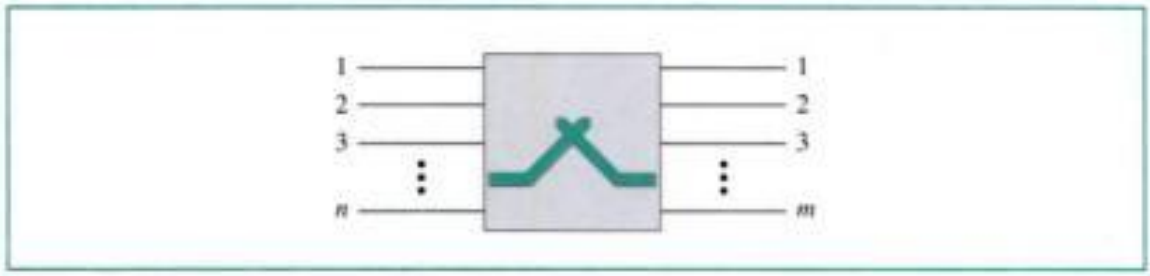

An n-by-n folded switch can connect n lines in full-duplex mode. For example, it can connect n telephones in such a way that each phone can be connected to every other phone (see Fig. 8.3).

Figure 8.3 *A folded switch*

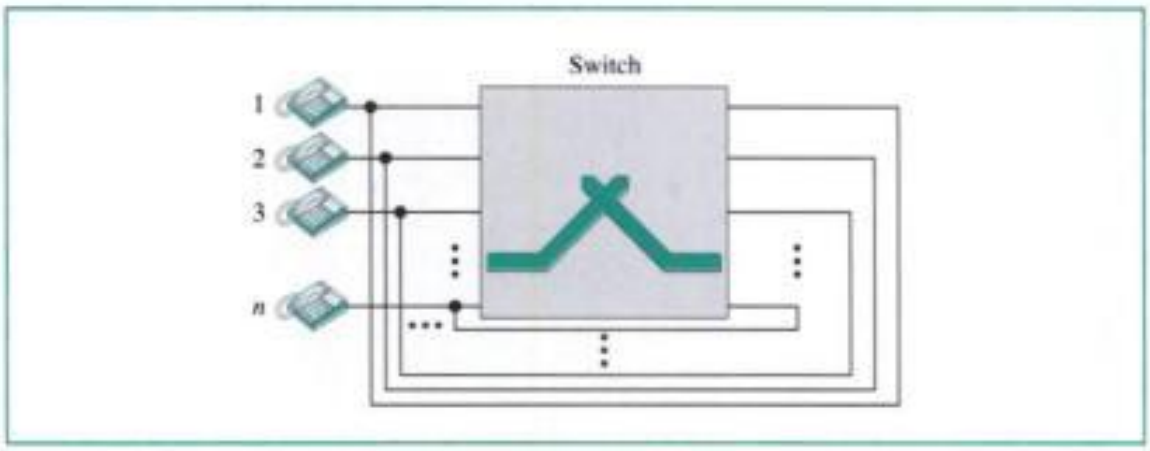

Copyrighted material

Circuit switching today can use either of two technologies: the space-division switch or the time-division switch.

Space-Division Switch

In **space-division switching,** the paths in the circuit are separated from each other spatially. This technology was originally designed for use in analog networks but is used currently in both analog and digital networks. It has evolved through a long history of many designs.

Crossbar Switch

A **crossbar switch** connects n inputs to m outputs in a grid, using electronic microswitches (transistors) at each **crosspoint** (see Fig. 8.4). The major limitation of this design is the number of crosspoints required. Connecting n inputs to m outputs using a crossbar switch requires $n \times m$ crosspoints. For example, to connect 1000 inputs to 1000 outputs requires a crossbar with 1,000,000 crosspoints. A crossbar with this number of crosspoints is impractical. Such a switch is also inefficient because statistics show that, in practice, fewer than 25 percent of the crosspoints are in use at any given time. The rest are idle.

Figure 8.4 *Crossbar switch*

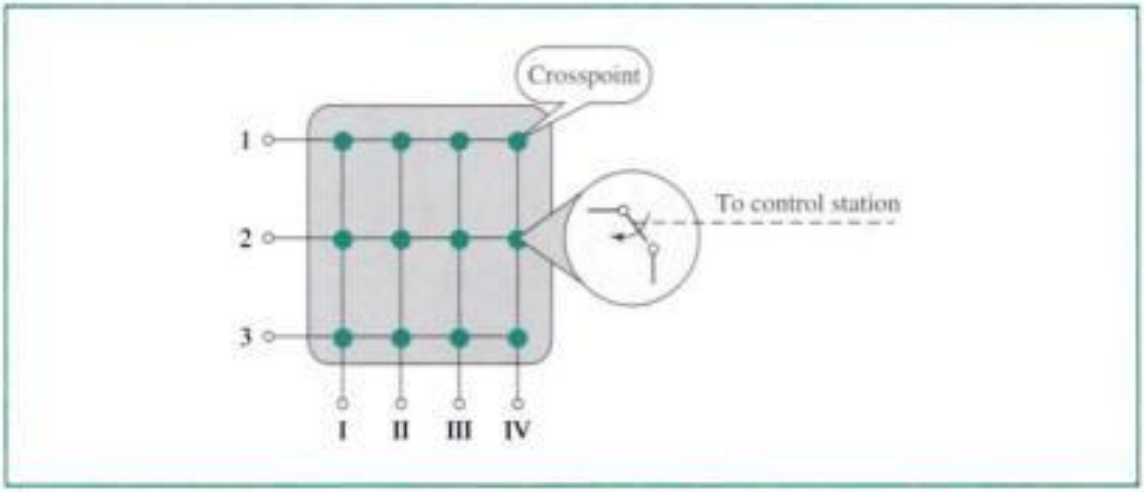

Multistage Switch

The solution to the limitations of the crossbar switch is the **multistage switch,** which combines crossbar switches in several stages. In multistage switching, devices are linked to switches that, in turn, are linked to other switches (see Fig. 8.5).

The design of a multistage switch depends on the number of stages and the number of switches required (or desired) in each stage. Normally, the middle stages have fewer switches than do the first and last stages. For example, imagine that we want a multistage switch as in Figure 8.5 to do the job of a single 15-by-15 crossbar switch. Assume that we have decided on a three-stage design that uses three switches in the first and final

Copyrighted material

Figure 8.5 *Multistage switch*

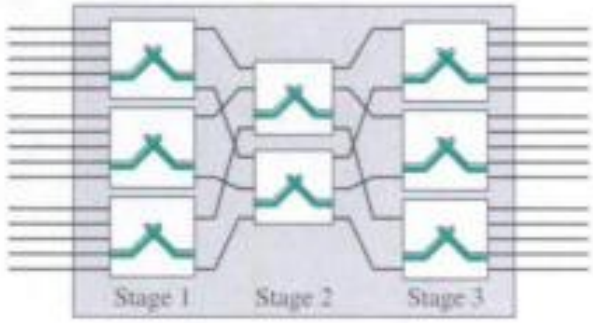

stages and two switches in the middle stage. Because there are three of them, each of the first-stage switches has inputs from one-third of the input devices, giving them five inputs each ($5 \times 3 = 15$).

Next, each of the first-stage switches must have an output to each of the intermediate switches. There are two intermediate switches; therefore, each first-stage switch has two outputs. Each third-stage switch must have inputs from each of the intermediate switches; two intermediate switches means two inputs. The intermediate switches must connect to all three first-stage switches and all three last-stage switches, and so must have three inputs and three outputs each.

Multiple Paths Multistage switches provide several options for connecting each pair of linked devices. Figure 8.6 shows two ways traffic can move from an input to an output using the switch designed in the example above.

Figure 8.6 *Switching path*

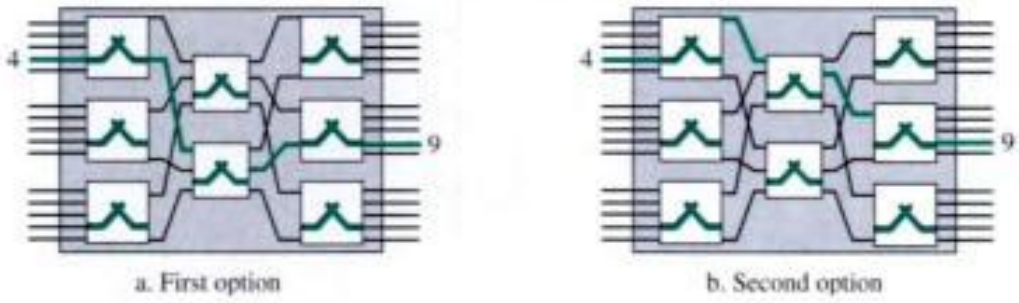

In Figure 8.6*a*, a pathway is established between input line 4 and output line 9. In this instance, the path uses the lower intermediate switch and that switch's center output line to reach the last-stage switch connected to line 9. Figure 8.6*b* shows a pathway between the same input line 4 and the same output line 9 using the upper intermediate switch.

Copyrighted material

Let us compare the number of crosspoints in a 15-by-15 single-stage crossbar switch with the 15-by-15 multistage switch that we described above. In the single-stage switch, we need 225 crosspoints (15 × 15). In the multistage switch, we need

- Three first-stage switches, each with 10 crosspoints (5 × 2), for a total of 30 crosspoints at the first stage.
- Two second-stage switches, each with 9 crosspoints (3 × 3), for a total of 18 crosspoints at the second stage.
- Three third-stage switches, each with 10 crosspoints (5 × 2), for a total of 30 crosspoints at the last stage.

The total number of crosspoints required by our multistage switch is 78. In this example, the multistage switch requires only 35 percent as many crosspoints as the single-stage switch.

Blocking This savings comes at a cost, however. The reduction in the number of crosspoints results in a phenomenon called **blocking** during periods of heavy traffic. Blocking refers to times when one input cannot be connected to an output because there is no path available between them—all the possible intermediate switches are occupied.

In a single-stage switch, blocking does not occur. Because every combination of input and output has its own crosspoint, there is always a path. (Cases where two inputs are trying to contact the same output don't count. That path is not blocked; the output is merely busy.) In the multistage switch described in the example above, however, only two of the first five inputs can use the switch at a time, only two of the second five inputs can use the switch at a time, and so on. The small number of outputs at the middle stage further increases the restriction on the number of available links.

In large systems, such as those having 10,000 inputs and outputs, the number of stages can be increased to cut down the number of crosspoints required. As the number of stages increases, however, possible blocking increases as well. Many people have experienced blocking on public telephone systems in the wake of a natural disaster when calls being made to check on or reassure relatives far outnumber the regular load of the system. In those cases, it is often impossible to get a connection. Under normal circumstances, however, blocking is not usually a problem. In countries that can afford it, the number of switches between lines is calculated to make blocking unlikely. The formula for finding this number is based on statistical analysis, which is beyond the scope of this book.

Time-Division Switch

Time-division switching uses time-division multiplexing to achieve switching. There are two popular methods used in time-division multiplexing: the time-slot interchange and the TDM bus.

Time-Slot Interchange (TSI)

Figure 8.7 shows a system connecting four input lines to four output lines. Imagine that each input line wants to send data to an output line according to the following pattern:

$$1 \longrightarrow 3 \qquad 2 \longrightarrow 4 \qquad 3 \longrightarrow 1 \qquad 4 \longrightarrow 2$$

Copyrighted material

Figure 8.7 *Time-division multiplexing, without and with a time-slot interchange*

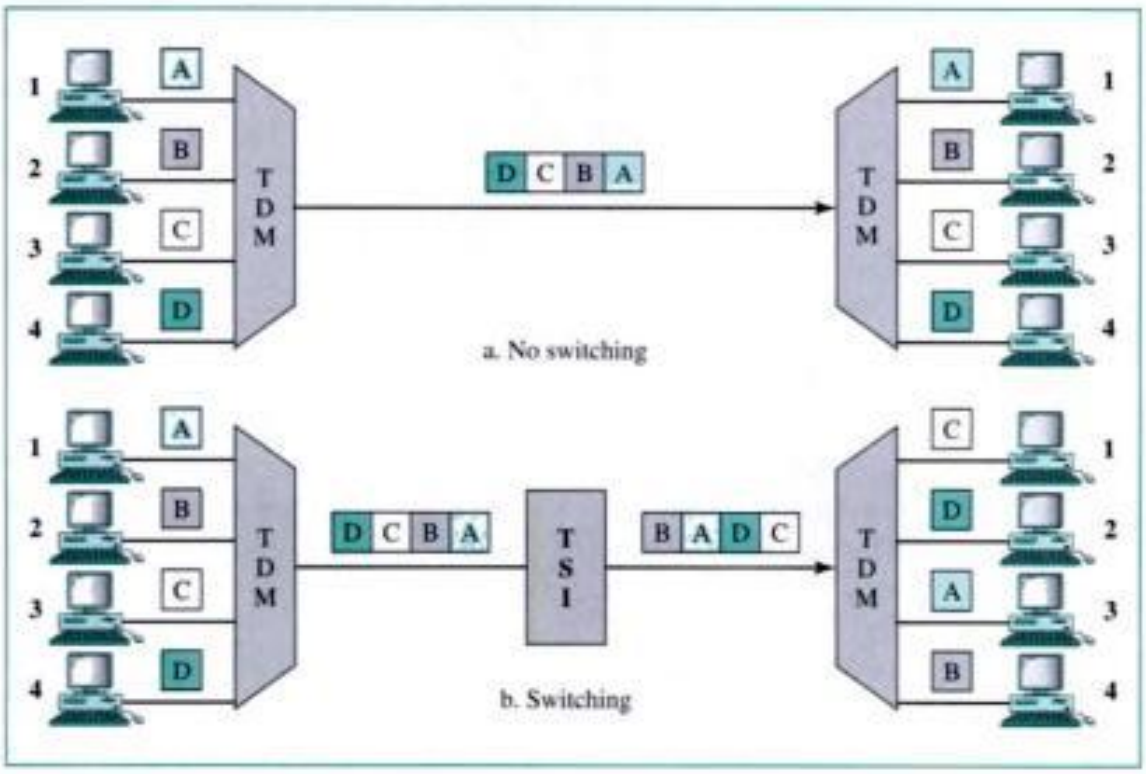

Figure 8.7*a* shows the results of ordinary time-division multiplexing. As you can see, the desired task is not accomplished. Data are output in the same order as they are input. Data from 1 go to 1, from 2 go to 2, from 3 go to 3, and from 4 go to 4.

In Figure 8.7*b*, however, we insert a device called a **time-slot interchange (TSI)** into the link. A TSI changes the ordering of the slots based on the desired connections. In this case, it changes the order of data from A, B, C, D to C, D, A, B. Now, when the demultiplexer separates the slots, it passes them to the proper outputs.

How a TSI works is shown in Figure 8.8. A TSI consists of random access memory (RAM) with several memory locations. The size of each location is the same as the

Figure 8.8 *Time-slot interchange*

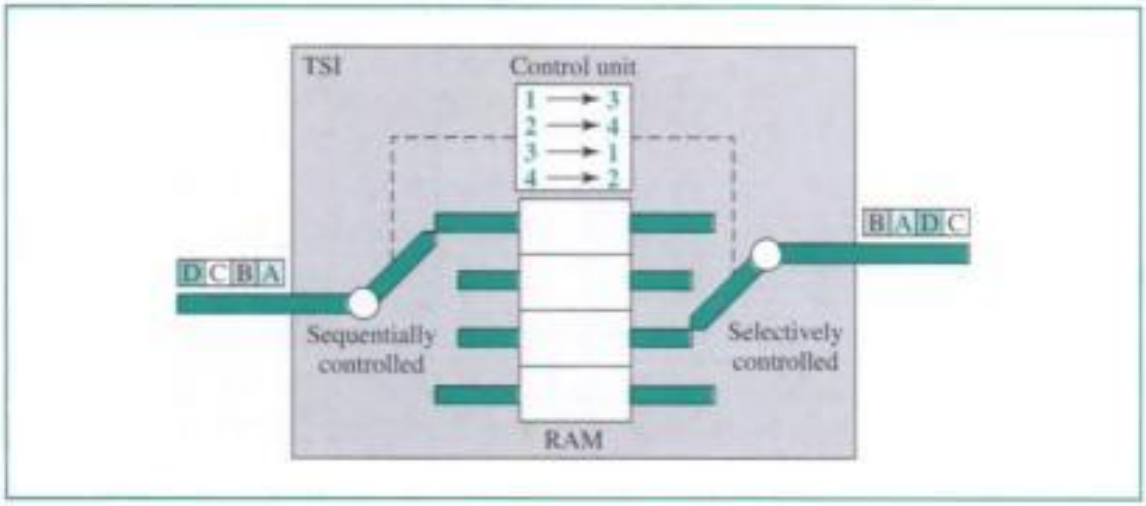

Copyrighted material

size of a single time slot. The number of locations is the same as the number of inputs (in most cases, the numbers of inputs and outputs are equal). The RAM fills up with incoming data from time slots in the order received. Slots are then sent out in an order based on the decisions of a control unit.

TDM Bus

Figure 8.9 shows a very simplified version of a **TDM bus.** The input and output lines are connected to a high-speed bus through input and output gates (microswitches). Each input gate is closed during one of the four time slots. During the same time slot, only one output gate is also closed. This pair of gates allows a burst of data to be transferred from one specific input line to one specific output line using the bus. The control unit opens and closes the gates according to switching need. For example, in the figure, at the first time slot, input gate 1 and output gate 3 will be closed; during the second time slot, input gate 2 and output gate 4 will be closed; and so on.

A folded TDM bus can be made with duplex lines (input and output) and dual gates.

Figure 8.9 *TDM bus*

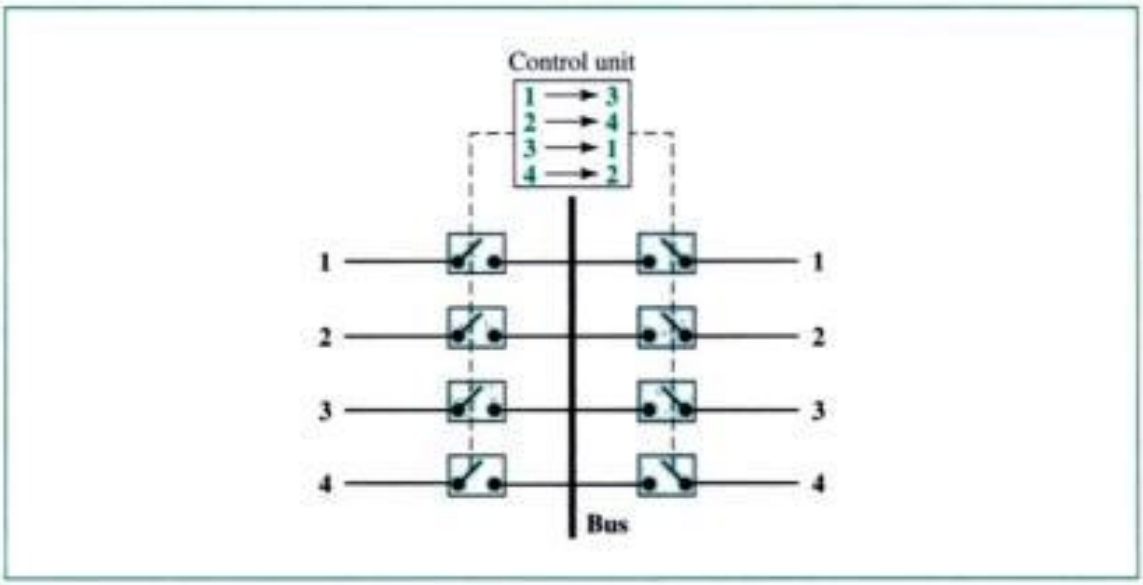

Space- and Time-Division Switch Combinations

When we compare space-division and time-division switching, some interesting facts emerge. The advantage of space-division switching is that it is instantaneous. Its disadvantage is the number of crosspoints required to make space-division switching acceptable in terms of blocking.

The advantage of time-division switching is that it needs no crosspoints. Its disadvantage, in the case of TSI, is that processing each connection creates delays. Each time slot must be stored by the RAM, then retrieved and passed on.

In a third option, we combine space-division and time-division technology to take advantage of the best of both. Combining the two results in switches that are optimized

Copyrighted material

both physically (the number of crosspoints) and temporally (the amount of delay). Multistage switches of this sort can be designed as time-space-time (TST), time-space-space-time (TSST), space-time-time-space (STTS), or other possible combinations.

Figure 8.10 shows a simple TST switch that consists of two time stages and one space stage and has 12 inputs and 12 outputs. Instead of one time-division switch, it divides the inputs into three groups (of four inputs each) and directs them to three time-slot interchanges. The result in this case is that the average delay is one-third of that which would result from using one time-slot interchange to handle all 12 inputs.

Figure 8.10 *TST switch*

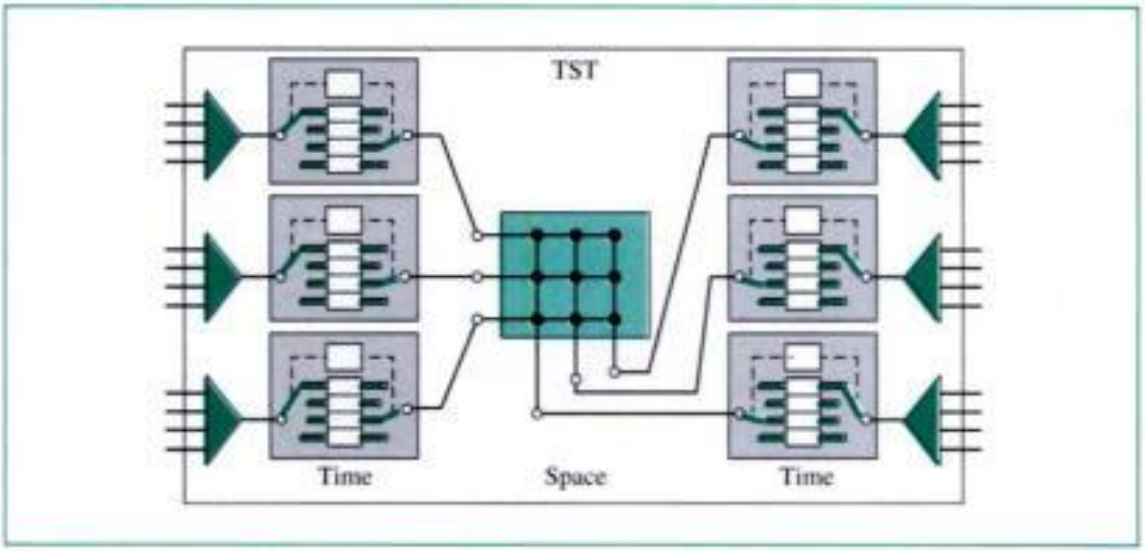

The last stage is a mirror image of the first stage. The middle stage is a space-division switch (crossbar) that connects the TSI groups to allow connectivity between all possible input and output pairs (e.g., to connect input 3 of the first group to output 7 of the second group).

8.2 TELEPHONE NETWORK

Telephone networks use circuit switching. The telephone network had its beginnings in the late 1800s. The entire network, which is referred to as the plain old telephone system (POTS), was originally an analog system using analog signals to transmit voice. With the advent of the computer era, the network, in the 1980s, began to carry data in addition to voice. During the last decade, the telephone network has undergone many technical changes. The network is now digital as well as analog.

Major Components

The telephone network, as shown in Figure 8.11, is made of three major components: local loops, trunks, and switching offices. The telephone network has several levels of switching offices such as end offices, tandem offices, and regional offices.

Copyrighted material

Figure 8.11 *A telephone system*

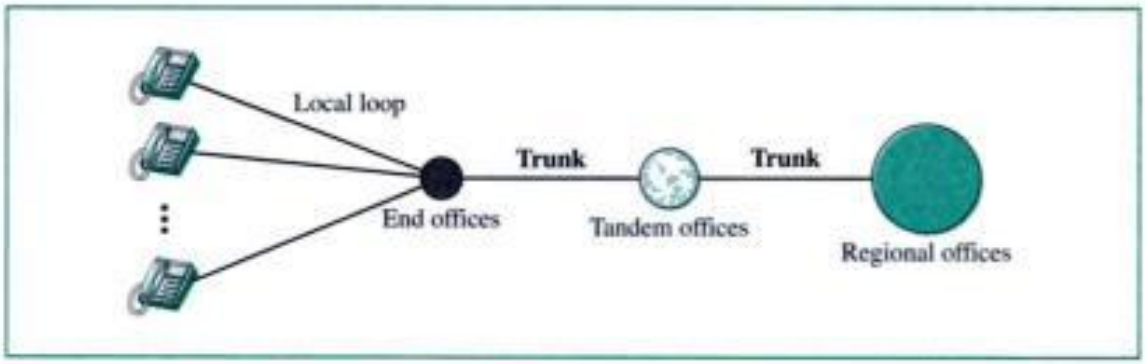

Local Loops

One component of the telephone network is the **local loop,** a twisted-pair cable that connects the subscriber telephone to the nearest **end office** or local central office. The local loop, when used for voice, has a bandwidth of 4000 Hz (4 KHz). It is interesting to examine the telephone number associated with each local loop. The first three digits of a local telephone number define the office, and the next four digits define the local loop number.

Trunks

Trunks are transmission media that handle the communication between offices. A trunk normally handles hundreds or thousands of connections through multiplexing. Transmission is usually through optical fibers or satellite links.

Switching Office

To avoid having a permanent physical link between any two subscribers, the telephone company has switches located in a **switching office.** A switch connects several local loops or trunks and allows a connection between different subscribers.

LATAs

After the divestiture of 1984 (see *A Brief History* section), the United States of America was divided into more than 200 **local access transport areas (LATAs).** The number of LATAs has increased since then. A LATA can be a small or large metropolitan area. A small state may have one single LATA; a large state may have several LATAs. A LATA boundary may overlap the boundary of a state; part of a LATA can be in one state, part in another state.

Intra-LATA Services

The services offered by the **common carriers** (telephone companies) inside a LATA are called intra-LATA services. The carrier that handles these services is called a **local exchange carrier (LEC).** Before the Telecommunications Act of 1996, intra-LATA services were granted to one single carrier. This was a monopoly. After 1996, more than one carrier could provide services inside a LATA. The carrier that provided services before 1996 owns the cabling system (local loops) and is called the **incumbent**

Copyrighted material

local exchange carrier (ILEC). The new carriers that can provide services are called **competitive local exchange carriers (CLECs).** To avoid the costs of new cabling, it was agreed that the ILECs would continue to provide the main services, and the CLECs would provide other services such as mobile telephone service, toll calls inside a LATA, and so on. Figure 8.12 shows a LATA and switching offices.

Intra-LATA services are provided by local exchange carriers. Since 1996, there are two types of LECs: incumbent local exchange carriers and competitive local exchange carriers.

Figure 8.12 *Switching offices in a LATA*

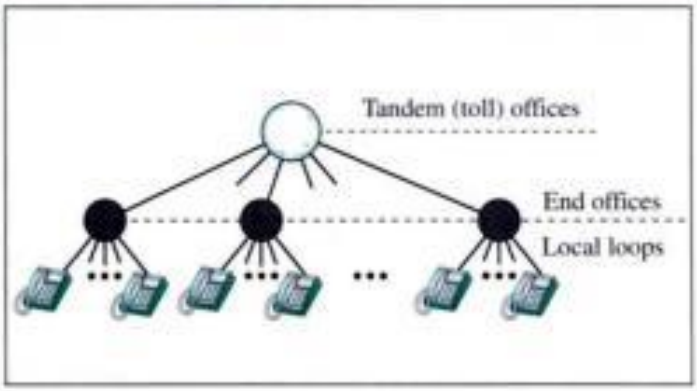

Communication inside a LATA is handled by end switches and tandem switches. A call that can be completed by using only end offices is considered toll-free. A call that has to go through a tandem office (intra-LATA toll office) is charged.

Inter-LATA Services

The services between LATAs are handled by **interexchange carriers (IXCs).** These carriers, sometimes called **long-distance companies,** provide communication services between two customers in different LATAs. After the act of 1996, these services can be provided by any carrier, including those involved in intra-LATA services. The field is wide open. Carriers providing inter-LATA services include AT&T, MCI, WorldCom, Sprint, and Verizon.

The IXCs are long-distance carriers that provide general data communications services including telephone service. A telephone call going through an IXC is normally digitized, with the carriers using several types of networks to provide service.

Points of Presence (POPs)

As we discussed, intra-LATA services can be provided by several LECs (one ILEC and possibly more than one CLEC). We also said that inter-LATA services can be provided by several IXCs. How do these carriers interact with one another? The answer is a

Copyrighted material

switching office called a **point of presence (POP).** Each IXC that wants to provide inter-LATA services in a LATA must have a POP in that LATA. The LECs that provide services inside the LATA must provide connections so that every subscriber can have access to all POPs. Figure 8.13 illustrates the concept.

Figure 8.13 *POPs*

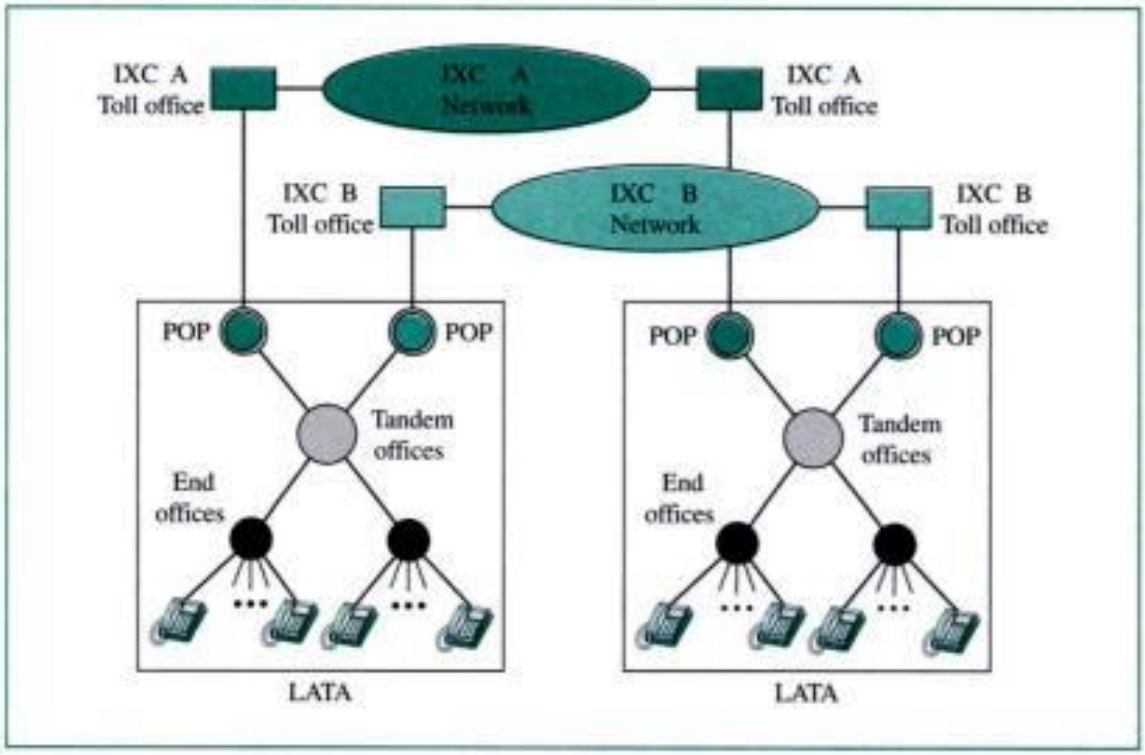

A subscriber who needs to make a connection with another subscriber is connected first to an end switch and then, either directly or through a tandem switch, to a POP. The call now goes from the POP of an IXC (the one the subscriber has chosen) in the source LATA to the POP of the same IXC in the destination LATA. The call will be passed through the toll office of the IXC and is carried through the network provided by the IXC.

Making a Connection

Subscriber telephones are connected, through local loops, to end offices (or central offices).

Accessing the switching station at the end offices is accomplished through dialing. In the past, telephones featured rotary or pulse dialing, in which a digital signal was sent to the end office for each number dialed. This type of dialing was prone to errors due to the inconsistency of humans during the dialing process.

Today, dialing is accomplished through the touch-tone technique. In this method, instead of sending a digital signal, the user sends two small bursts of analog signals, called *dual tone*. The frequency of the signals sent depends on the row and column of the pressed pad.

Copyrighted material

Figure 8.14 *Rotary and touch-tone dialing*

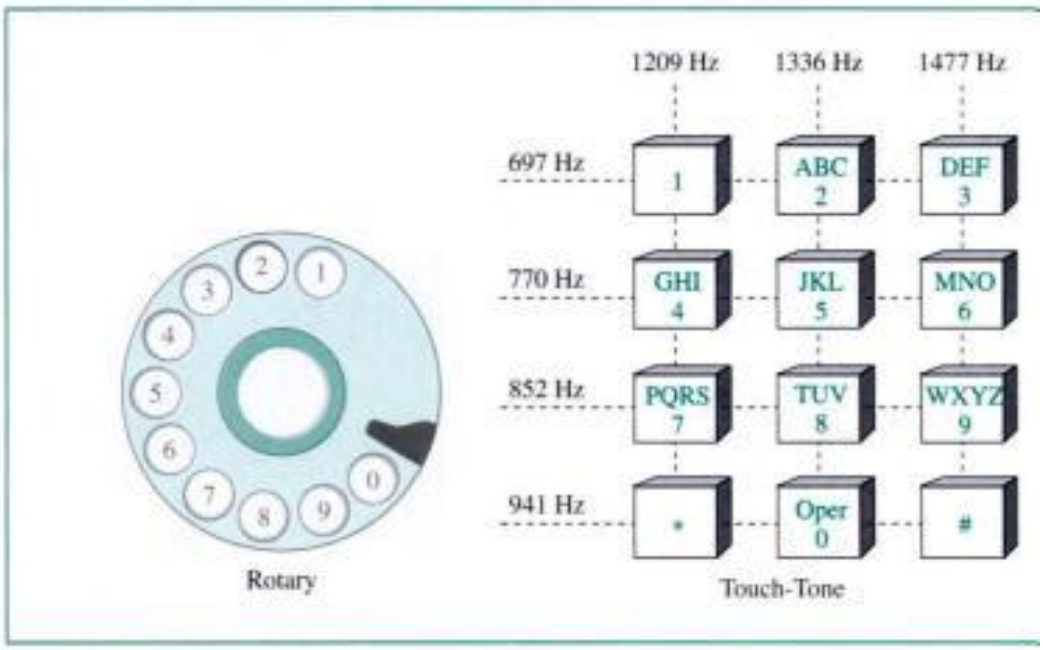

Figure 8.14 shows a **rotary** and a **touch-tone dialing** system. In Figure 8 user has a rotary telephone, the number 8 is represented by a digital signal. On t hand, if a user has a touch-tone telephone, two bursts of analog signals with f cies 852 and 1336 Hz are sent to the end office.

Voice communication used analog signals in the past, but is now moving to digi nals. On the other hand, dialing started with digital signals (rotary) and is now r to analog signals (touch-tone).

Analog Services

Early on, telephone companies provided their subscribers with analog services services still continue today. We can categorize these services as either analog s services or analog leased services.

Analog Switched Service

Analog switched service is the familiar dial-up service most often encountered home telephone is used. The signal on a local loop is analog, and the bandwidth ally between 0 and 4000 Hz. With switched lines, when the caller dials a num call is conveyed to a switch, or series of switches, at the exchange. The app switches are then activated to link the caller's line to that of the person being The switch connects the two lines for the duration of the call.

The LECs and IXCs provide optional services for their residential and b customers. We discuss the most common.

Local Call Services A **local call service** is normally provided for a flat r rate, although in some LATAs, the carrier charges for each call or a set of ca

Copyrighted material

rationale for a non-flat-rate charge is to provide cheaper service for those customers who do not make many calls.

Toll Call Services A **toll call** can be intra-LATA or inter-LATA. If the LATA is geographically large, a call may go through a tandem office (toll office) and the subscriber will pay a fee for the call. The inter-LATA calls are long-distance calls and are charged as such.

800 Services If a subscriber (normally an organization) needs to provide free connections for other subscribers (normally customers), it can request an **800 service** (also 888, 877, 866 because 800 numbers are already exhausted). In this case, the call is free for the caller, but it is paid by the callee. An organization uses this service to encourage customers to call. The rate is less expensive than a normal long-distance call.

WATS The **wide-area telephone service (WATS)** is the opposite of 800/888 service. The latter are inbound calls paid by the organization; the former are outbound calls paid by the organization. This service is a less expensive alternative to regular toll calls; charges are based on the number of calls. The service can be specified as outbound calls to the same state, to several states, or to the whole country, with rates charged accordingly.

900 Services The **900 services** are like 800/888 services, in that they are inbound calls to a subscriber. However, unlike 800/888 services, the call is paid by the caller and is normally much more expensive than a normal long-distance call. The reason is that the carrier charges two fees; the first is the long-distance toll, and the second is the fee paid to the callee for each call. This service is used by an organization that needs to charge customers for its services. For example, a software company may need to charge a customer for technical support.

Analog Leased Service

An **analog leased service** offers customers the opportunity to lease a line, sometimes called a dedicated line, that is permanently connected to another customer. Although the connection still passes through the switches in the telephone network, subscribers experience it as a single line because the switch is always closed; no dialing is needed.

Digital Services

Recently telephone companies began offering **digital services** to their subscribers. Digital services are less sensitive than analog services to noise and other forms of interference. The two most common digital services are switched/56 and digital data service (DDS). We have already discussed high-speed digital services, the T lines, in Chapter 6. We discuss residential high-speed access in Chapter 9.

Switched/56 Service

Switched/56 service is the digital version of an analog switched line. It is a switched digital service that allows data rates of up to 56 Kbps. To communicate through this service, both parties must subscribe. A caller with normal telephone service cannot

Copyrighted material

connect to a telephone or computer with switched/56 even if using a modem. On the whole, digital and analog services represent two completely different domains for the telephone companies.

Because the line in a switched/56 service is already digital, subscribers do not need modems to transmit digital data. However, they do need another device called a **digital service unit (DSU).** This device changes the rate of the digital data created by the subscriber's device to 56 Kbps and encodes them in the format used by the service provider. Switched/56 supports bandwidth on demand, allowing subscribers to obtain higher speeds by using more than one line (see the section on inverse multiplexing in Chapter 6). This option allows switched/56 to support video conferencing, fast facsimile, multimedia, and fast data transfer, among other services.

Digital Data Service (DDS)

Digital data service (DDS) is the digital version of an analog leased line; it is a digital leased line with a maximum data rate of 64 Kbps.

A Brief History

Before we leave this topic, let us review the history of telephone companies. The history of common carriers in the United States can be divided into three eras: prior to 1984, between 1984 and 1996, and after 1996.

Before 1984

Before 1984, almost all local and long-distance services were provided by the AT&T Bell System. In 1970, the U.S. government, believing that the Bell System was monopolizing the telephone service industry, sued the company. The verdict was in the favor of the government, and based on a document called the Modified Final Judgment (MFJ), beginning on January 1, 1984, AT&T was broken into AT&T Long Lines, 23 Bell Operating Companies (BOCs), and others. The 23 BOCs were grouped together to make several Regional Bell Operating Systems (RBOCs). This landmark event, the AT&T divestiture of 1984, was beneficial to customers of telephone services. Telephone rates were lower.

Between 1984 and 1996

The divestiture divided the country into more than 200 LATAs; some companies were allowed to provide services inside a LATA (LECs) and others were allowed to provide services between LATAs (IXCs). Competition, particularly between long-distance carriers, increased as new companies were formed. However, no LEC could provide long-distance services, and no IXCs could provide local services.

After 1996

Another major change in telecommunications occurred in 1996. The Telecommunications Act of 1996 combined the different services provided by different companies under the umbrella of telecommunication services; this included local services, long-distance voice and data services, video services, and so on. In addition, the act allowed

Copyrighted material

any company to provide any of these services at the local and long-distance levels. In other words, a common carrier company provides services both inside the LATA and between the LATAs. However, to prevent the recabling of residents, the carrier that was given intra-LATA services (ILEC) continues to provide the main services; the new competitors (CLECs) provide other services.

8.3 KEY TERMS

800 service
900 service
analog leased service
analog switched service
blocking
circuit switching
common carrier
competitive local exchange carrier (CLEC)
crossbar switch
crosspoint
digital data service (DDS)
digital service
digital service unit (DSU)
end office
incumbent local exchange carrier (ILEC)
interexchange carrier (IXC)
local access and transport area (LATA)
local call service
local exchange carrier (LEC)
local loop
long-distance company
multistage switch
point-to-point connection
point of presence (POP)
rotary dialing
space-division switching
switch
switched/56 service
switching office
TDM bus
time-division switching
time-slot interchange (TSI)
toll call service
touch-tone dialing
trunk
wide-area telephone service (WATS)

8.4 SUMMARY

- Switching is a method in which communication devices are connected to one another efficiently.
- A switch is intermediary hardware or software that links devices together temporarily.
- There are three fundamental switching methods: circuit switching, packet switching, and message switching.
- In circuit switching, a direct physical connection between two devices is created by space-division switches, time-division switches, or both.
- In a space-division switch, the path from one device to another is spatially separate from other paths.
- A crossbar is the most common space-division switch. It connects n inputs to m outputs via $n \times m$ crosspoints.
- Multistage switches can reduce the number of crosspoints needed, but blocking may result.

Copyrighted material

- Blocking occurs when not every input has its own unique path to every output.
- In a time-division switch, the inputs are divided in time, using TDM. A control unit sends the input to the correct output device.
- The time-slot interchange and the TDM bus are two types of time-division switches.
- Space- and time-division switches may be combined.
- A telephone network is an example of a circuit-switched network.
- A telephone system has three major components: local loops, trunks, and switching offices.
- The United States is divided into more than 200 local access and transport areas (LATAs).
- Intra-LATA services are provided by incumbent local exchange carriers (ILECs) and competitive local exchange carriers (CLECs). Inter-LATA services are handled by interexchange carriers (IXCs).
- Telephone companies provide analog switched services such as local calls, toll calls, 800/888 services, WATS, and 900 services.
- Telephone companies provide digital services such as switched/56 services and digital data services.
- The AT&T monopoly was broken in 1984 through a government suit.

8.5 PRACTICE SET

Review Questions

1. What are the three major switching methods?
2. What are two types of switches used in circuit switching?
3. What is a crosspoint in a crossbar switch?
4. What is the limiting factor in a crossbar switch? How does a multistage switch alleviate the problem?
5. How is blocking related to a crossbar switch?
6. How is blocking related to a multistage switch?
7. Compare the mechanism of a space-division switch to the mechanism of a time-division switch.
8. Name the two technologies used in a time-division switch.
9. Compare a TSI to a TDM bus.
10. What is the function of the control unit in a TSI and a TDM bus?
11. How is space-division switching superior to time-division switching?
12. How is time-division switching superior to space-division switching?
13. What are the three main components of a telephone system?
14. What is the local loop?
15. What is the bandwidth of a traditional telephone line?
16. What is the function of a trunk?

Copyrighted material

17. How is an ILEC different from a CLEC?
18. What is the function of a POP?
19. How are telephone services between LATAs handled?
20. Compare the signals used in rotary dialing with the signals used in touch-tone dialing.
21. How does 800 service differ from 900 service?
22. What is the difference between an analog switched service and an analog leased service?
23. What is the function of a DSU?

Multiple-Choice Questions

24. The _____ is a device that connects *n* inputs to *m* outputs.
    a. Crosspoint
    b. Crossbar
    c. Modem
    d. RAM
25. How many crosspoints are needed in a single-stage switch with 40 inputs and 50 outputs?
    a. 40
    b. 50
    c. 90
    d. 2000
26. In a crossbar with 1000 crosspoints, approximately how many are in use at any time?
    a. 100
    b. 250
    c. 500
    d. 1000
27. The _____ of a TSI controls the order of delivery of slot values that are stored in RAM.
    a. Crossbar
    b. Crosspoint
    c. Control unit
    d. Transceiver
28. In _____ circuit switching, delivery of data is delayed because data must be stored and retrieved from RAM.
    a. Space-division
    b. Time-division
    c. Virtual
    d. Packet

Copyrighted material

29. To create a _____, combine crossbar switches in stages.
    a. Multistage switch
    b. Crosspoint
    c. Packet switch
    d. TSI
30. Which of the following is a time-division switch?
    a. TSI
    b. TDM bus
    c. Crosspoint
    d. (a) and (b)
31. In a time-division switch, a _____ governs the destination of a packet stored in RAM.
    a. TDM bus
    b. Crosspoint
    c. Crossbar
    d. Control unit
32. A telephone network is an example of a _____ network.
    a. Packet-switched
    b. Circuit-switched
    c. Message-switched
    d. None of the above
33. The local loop has _____ cable that connects the subscriber telephone to the nearest end office.
    a. Twisted-pair
    b. Coaxial
    c. Fiber-optic
    d. (b) and (c)
34. Trunks are transmission media such as _____ that handle the telephone communication between offices.
    a. Twisted-pair cable
    b. Fiber-optic cable
    c. Satellite links
    d. (b) and (c)
35. The established telephone company that provided services in a LATA before 1966 and owns the cabling system is called _____.
    a. An ILEC
    b. A CLEC
    c. An IXC
    d. A POP

Copyrighted material

36. A new telephone company that provides services in a LATA after 1966 is called _____.
    a. An ILEC
    b. A CLEC
    c. An IXC
    d. A POP
37. The telephone service handled between two LATAs is called _____.
    a. An ILEC
    b. A CLEC
    c. An IXC
    d. A POP
38. If the end office receives two bursts of analog signals with frequencies of 697 and 1477 Hz, then the number _____ has been punched.
    a. 1
    b. 2
    c. 3
    d. 4
39. Data from a computer are _____; the local loop handles _____ signals.
    a. Analog; analog
    b. Analog; digital
    c. Digital; digital
    d. Digital; analog
40. A traditional telephone line has a bandwidth of _____.
    a. 2000 Hz
    b. 4000 Hz
    c. 2000 MHz
    d. 4000 MHz

Exercises

41. How many crosspoints are needed if we use a crossbar switch to connect 1000 telephones in a small town?
42. In Figure 8.15, find the number of crosspoints needed.
43. How many crosspoints are needed if we use only one crossbar switch in Figure 8.15?
44. Using Exercises 42 and 43, how much is the efficiency improved if we use three stages instead of one?
45. In Figure 8.15, how many users connected to each first-stage switch can access the system at the same time? How many total users can access the whole system? Is

Copyrighted material

Figure 8.15 *Exercises 42, 43, 45, and 46*

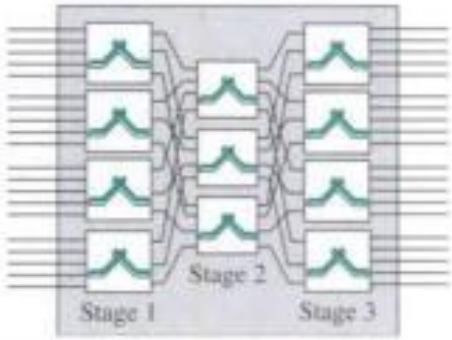

there any relationship between the first and the second answers? Can you say that the second answer can be obtained from the first answer?

46. In Figure 8.15, can we alleviate the blocking problem by adding more second-stage switches?

47. Which of the three-stage switches in Figure 8.16 has a better performance in terms of blocking? Justify your answer. Find the number of input/output connections for the middle switches.

Figure 8.16 *Exercise 47*

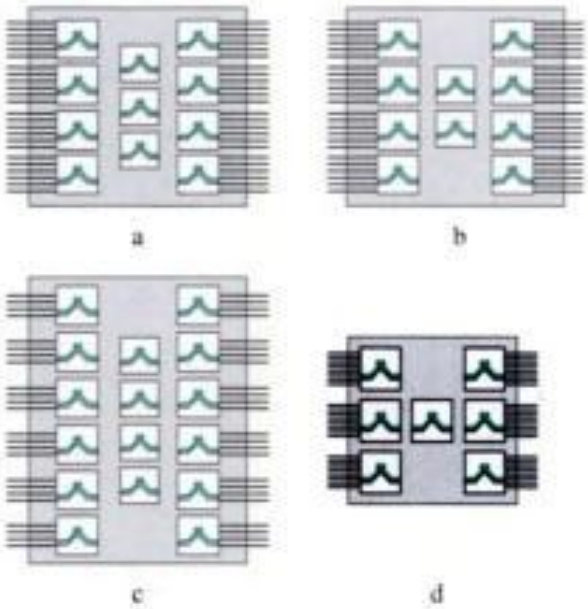

Copyrighted material

48. What is the formula to find, in a three-stage crossbar switch, the number of cross-points n in terms of the number of input/output lines N, the number of first- and third-stage switches K, and the number of second-stage switches L?
49. In Figure 8.9, what goes to the output lines if the input lines receive A, B, C, and D?
50. Design a folded TDM bus with four lines.
51. Design a TSSST switch with 48 inputs and 48 outputs. The input multiplexers should be 4×1; the output multiplexers should be 1×4.
52. Design an STS switch with 10 inputs and 10 outputs. The first-stage switches should be 5×2, and the last-stage switches should be 2×5.

Copyrighted material

Copyrighted material

CHAPTER 9

High-Speed Digital Access: DSL, Cable Modems, and SONET

We discussed in Chapter 5 how modems create a digital signal so that subscribers can access the Internet through their telephones. Traditional modems impose an upper limit on the data rate available for this type of access. In this chapter, we discuss three dominant technologies that surpass the limit of traditional modems: the DSL technology, cable modem, and SONET.

9.1 DSL TECHNOLOGY

After traditional modems reached their peak data rate, telephone companies developed another technology, DSL, to provide higher-speed access to the Internet. **Digital subscriber line (DSL)** technology is one of the most promising for supporting high-speed digital communication over the existing local loops. DSL technology is a set of technologies, each differing in the first letter (ADSL, VDSL, HDSL, and SDSL). The set is often referred to as *x*DSL, where *x* can be replaced by A, V, H, or S.

ADSL

The first technology in the set is **asymmetrical DSL (ADSL).** ADSL, like a 56K modem, provides higher speed (bit rate) in the downstream direction (from the Internet to the resident) than in the upstream direction (from the resident to the Internet). That is the reason it is called asymmetric. Unlike the asymmetry in 56K modems, the designers of ADSL specifically divided the available bandwidth of the local loop unevenly for the residential customer. The service is not suitable for business customers who need a large bandwidth in both directions.

> ADSL is an asymmetric communication technology designed for residential users; it is not suitable for businesses.

Using Existing Local Loops

One interesting point is that ADSL uses the existing local loop. But how does ADSL reach a data rate that was never achieved with traditional modems? The answer is that

Copyrighted material

the twisted-pair local loop is actually capable of handling bandwidths up to 1.1 MHz, but the filter installed at the end of the line by the telephone company limits the bandwidth to 4 KHz (sufficient for voice communication). This was done to allow the multiplexing of a large number of voice channels. If the filter is removed, however, the entire 1.1 MHz is available for data and voice communications.

The existing local loops can handle bandwidths up to 1.1 MHz.

Adaptive Technology

Unfortunately, 1.1 MHz is just the theoretical bandwidth of the local loop. Factors such as the distance between the residence and the switching office, the size of the cable, the signaling used, and so on affect the bandwidth. The designers of ADSL technology were aware of this problem and used an adaptive technology that tests the condition and bandwidth availability of the line before settling on a data rate. The data rate of ADSL is not fixed; it changes based on the condition and type of the local loop cable.

ADSL is an adaptive technology. The system uses a data rate based on the condition of the local loop line.

DMT

The modulation technique that has become standard for ADSL is called the **discrete multitone technique (DMT)** which combines QAM and FDM. There is no set way that the bandwidth of a system is divided. Each system can decide on its bandwidth division. Typically, an available bandwidth of 1.104 MHz is divided into 256 channels. Each channel uses a bandwidth of 4.312 KHz, as shown in Figure 9.1.

Figure 9.1 *DMT*

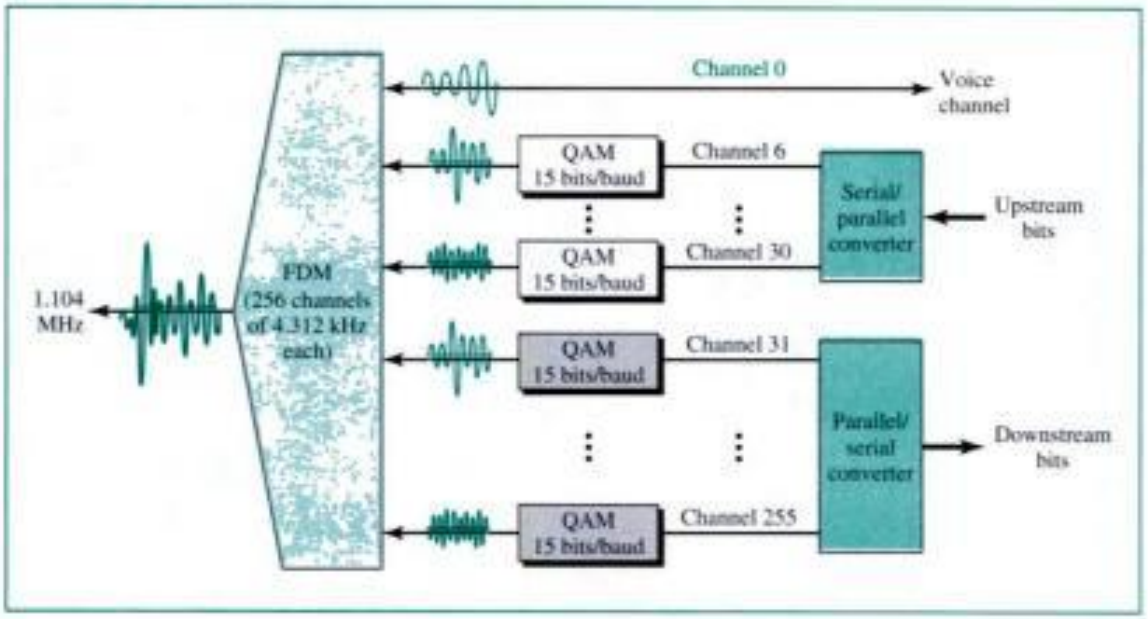

Copyrighted material

Figure 9.2 shows how the bandwidth can be divided into the following:

- **Voice.** Channel 0 is reserved for voice communication.
- **Idle.** Channels 1 to 5 are not used, to allow a gap between voice and data communication.
- **Upstream data and control.** Channels 6 to 30 (25 channels) are used for upstream data transfer and control. One channel is for control, and 24 channels are for data transfer. If there are 24 channels, each using 4 KHz (out of 4.312 KHz available) with QAM modulation, we have $24 \times 4000 \times 15$, or a 1.44-Mbps bandwidth, in the upstream direction.
- **Downstream data and control.** Channels 31 to 255 (225 channels) are used for downstream data transfer and control. One channel is for control, and 224 channels are for data. If there are 224 channels, we can achieve up to $224 \times 4000 \times 15$, or 13.4 Mbps.

Figure 9.2 *Bandwidth division*

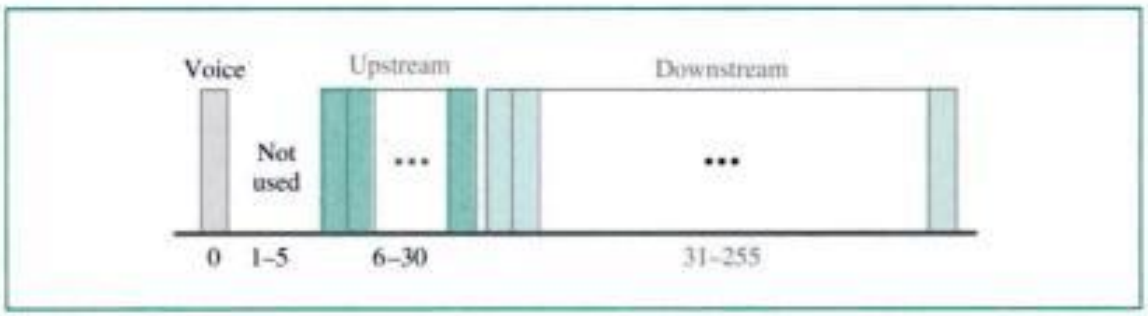

Actual Bit Rate

Because of the high signal/noise ratio, the actual bit rate is much lower than the above-mentioned rate. The bit rates are normally as follows:

Upstream: 64 Kbps to 1 Mbps

Downstream: 500 Kbps to 8 Mbps

Customer Site: ADSL modem

Figure 9.3 shows an ADSL modem installed at a customer's site. The local loop connects to the filter which separates voice and data communication. The ADSL modem modulates the data, using DMT, and creates downstream and upstream channels.

Telephone Company Site: DSLAM

At the telephone company site, the situation is different. Instead of an ADSL modem, a device called a **digital subscriber line access multiplexer (DSLAM)** is installed that functions similarly to ADSL. In addition, it packetizes the data to be sent to the Internet (ISP server). Figure 9.4 shows the configuration.

Copyrighted material

Figure 9.3 *ADSL modem*

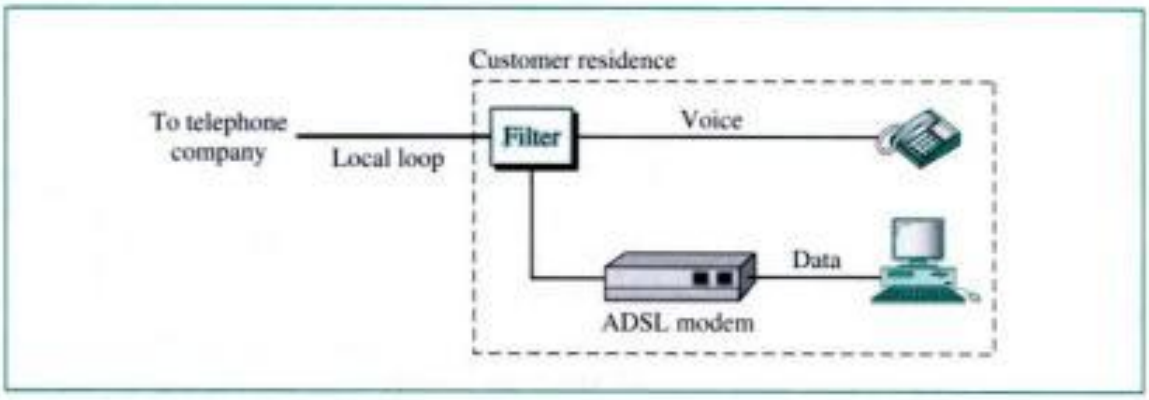

Figure 9.4 *DSLAM*

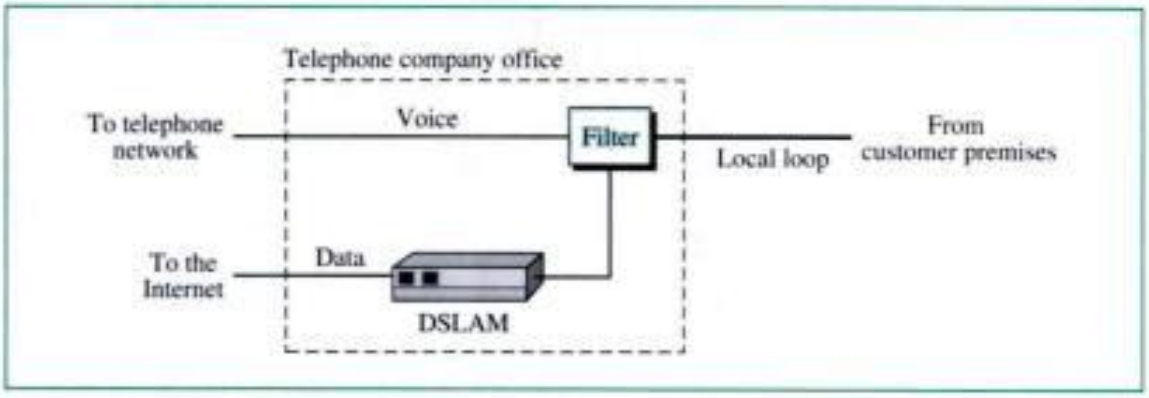

Other DSL Technologies

SDSL

ADSL provides asymmetric communication. The downstream bit rate is much higher than the upstream bit rate. Although this feature meets the needs of most residential subscribers, it is not suitable for businesses that send and receive data in large volumes in both directions. The **symmetric digital subscriber line (SDSL)** is designed for these types of businesses. It divides the available bandwidth equally between the downstream and upstream directions.

HDSL

The **high-bit-rate digital subscriber line (HDSL)** was designed as an alternative to the T-1 line (1.544 Mbps). The T-1 line uses alternate mark inversion (AMI) encoding, which is very susceptible to attenuation at high frequencies. This limits the length of a T-1 line to 1 km. For longer distances, a repeater is necessary, which means increased costs.

HDSL uses 2B1Q encoding (see Chapter 4), which is less susceptible to attenuation. A data rate of almost 2 Mbps can be achieved without repeaters up to a distance of 3.6 km. HDSL uses two twisted-pair wires to achieve full-duplex transmission.

Copyrighted material

VDSL

The **very-high-bit-rate digital subscriber line (VDSL),** an alternative approach that is similar to ADSL, uses coaxial, fiber-optic, or twisted-pair cable for short distances (300 to 1800 m). The modulating technique is DMT with a bit rate of 50 to 55 Mbps downstream and 1.5 to 2.5 Mbps upstream.

9.2 CABLE MODEM

Cable companies are now competing with telephone companies for the residential customer who wants high-speed access to the Internet. DSL technology provides high-data-rate connections for residential subscribers over the local loop. However, DSL uses the existing unshielded twisted-pair cable, which is very susceptible to interference. This imposes an upper limit on the data rate. Another solution is the use of the cable TV network. In this section, we briefly discuss this technology.

Traditional Cable Networks

Cable TV started to distribute broadcast video signals to locations with poor or no reception in the late 1940s. It was called **community antenna TV (CATV)** because an antenna at the top of a tall hill or building received the signals from the TV stations and distributed them, via coaxial cables, to the community. Figure 9.5 shows a schematic diagram of a traditional cable TV network.

Figure 9.5 *Traditional cable TV network*

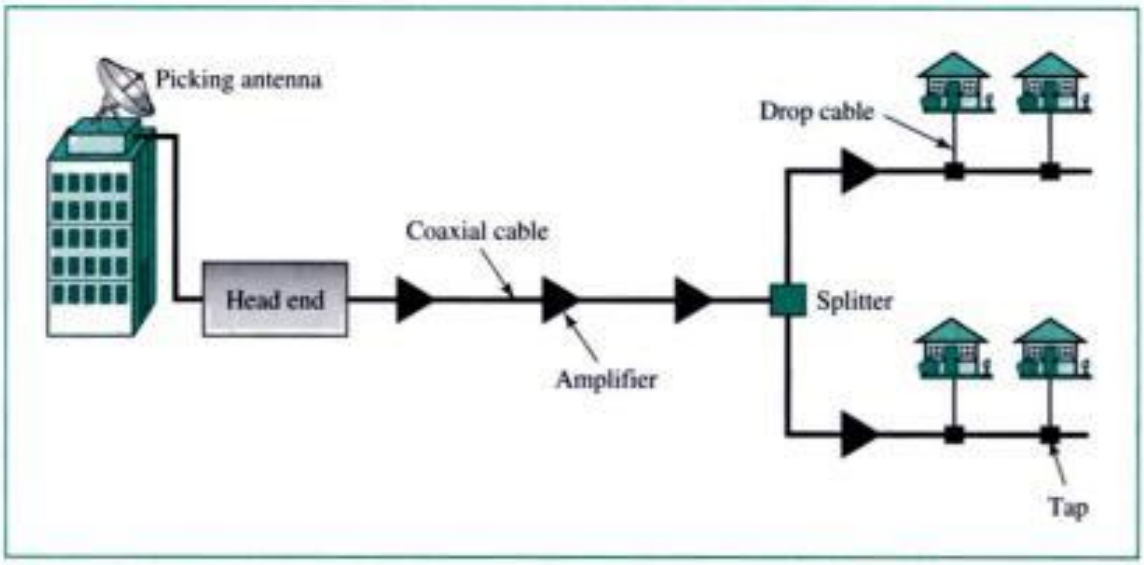

The cable TV office, called the **head end,** receives video signals from broadcasting stations and feeds the signals into coaxial cables. The signals became weaker and weaker, so amplifiers were installed through the network to amplify the signals. There could be up to 35 amplifiers between the head end and the subscriber premises. At the

Copyrighted material

other end, splitters split the cable, and taps and drop cables make the connections to the subscriber premises.

The traditional cable TV system used coaxial cable end to end. Due to attenuation of the signals and the use of a large number of amplifiers, communication in the traditional network was unidirectional (one-way). Video signals were transmitted downstream, from the head end to the subscriber premises.

Communication in the traditional cable TV network is unidirectional.

HFC Network

The second generation of cable networks is called a **hybrid fiber-coaxial (HFC) network.** The network uses a combination of fiber-optic and coaxial cable. The transmission medium from the cable TV office to a box, called the **fiber node,** is optical fiber; from the fiber node through the neighborhood and into the house is still coaxial cable. Figure 9.6 shows a schematic diagram of an HFC network.

Figure 9.6 *HFC network*

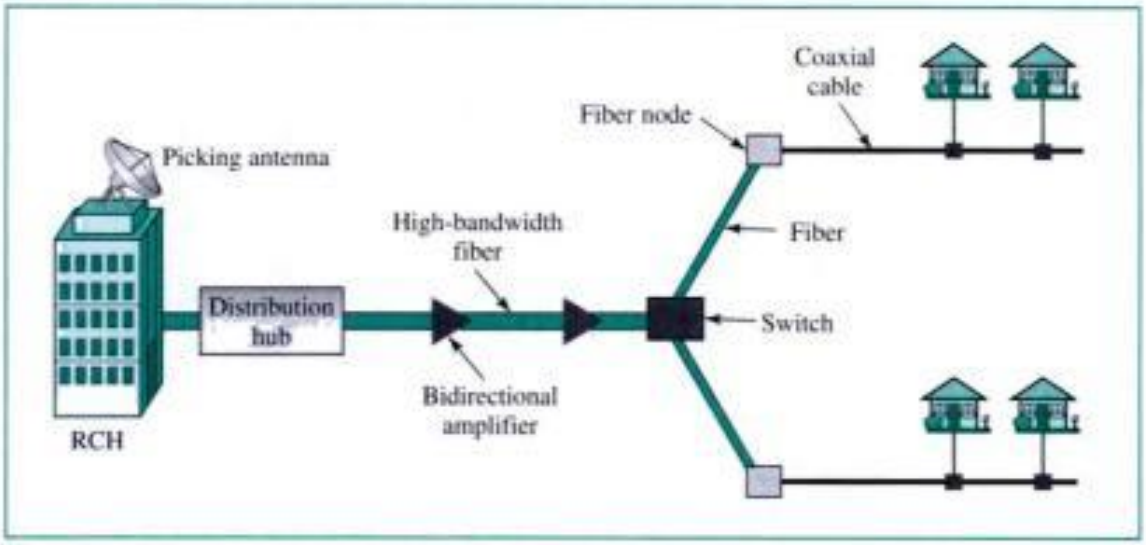

The **regional cable head (RCH)** normally serves up to 400,000 subscribers. The RCHs feed the **distribution hubs,** each of which serves up to 40,000 subscribers. The distribution hub plays an important role in the new infrastructure. Modulation and distribution of signals are done here; the signals are then fed to the fiber nodes through fiber-optic cables. The fiber node splits the analog signals so that the same signal is sent to each coaxial cable. Each coaxial cable serves up to 1000 subscribers. The use of fiber-optic cable reduces the need for amplifiers down to eight or less.

One reason for moving from traditional to hybrid infrastructure is to make the cable network bidirectional (two-way).

Communication in an HFC cable TV network can be bidirectional.

Copyrighted material

Bandwidth

Even in an HFC system, the last part of the network, from the fiber node to the subscriber premises, is still a coaxial cable. This coaxial cable has a bandwidth that ranges from 5 to 750 MHz (approximately). The cable company has divided this bandwidth into three bands: video, downstream data, and upstream data, as shown in Figure 9.7.

Figure 9.7 *Coaxial cable bands*

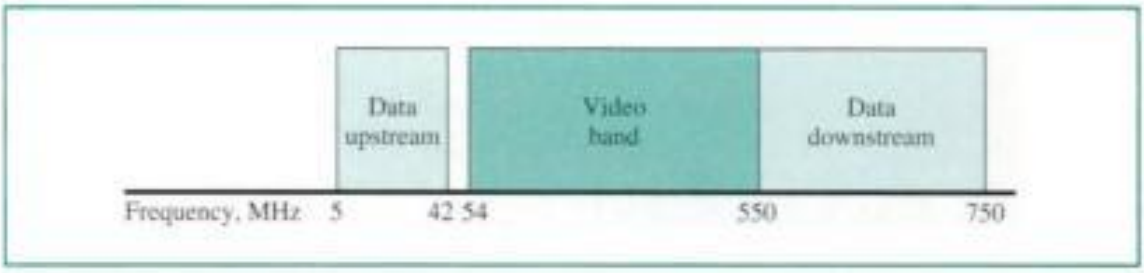

Video Band

The downstream-only **video band** occupies frequencies from 54 to 550 MHz. Since each TV channel occupies 6 MHz, this can accommodate more than 80 channels.

Downstream Data Band

The downstream data (from the Internet to the subscriber premises) occupies the upper band, from 550 to 750 MHz. This band is also divided into 6-MHz channels.

Modulation Downstream data are modulated using the 64-QAM (or possibly 256-QAM) modulation technique.

Downstream data are modulated using the 64-QAM modulation technique.

Data Rate There are 6 bits for each baud in 64-QAM. One bit is used for forward error correction; this leaves 5 bits of data per baud. The standard specifies 1 Hz for each baud; this means that, theoretically, downstream data can be received at 30 Mbps (5 bits/Hz × 6 MHz). The standard specifies only 27 Mbps. However, since the cable modem is connected to the computer through a 10base-T cable (see Chapter 14), this limits the data rate to 10 Mbps.

The theoretical downstream data rate is 30 Mbps.

Upstream Data Band

The upstream data (from the subscriber premises to the Internet) occupies the lower band, from 5 to 42 MHz. This band is also divided into 6-MHz channels.

Modulation The **upstream data band** uses lower frequencies that are more susceptible to noise and interference. For this reason, the QAM technique is not suitable for this band. A better solution is QPSK.

Copyrighted material

Upstream data are modulated using the QPSK modulation technique.

Data Rate There are 2 bits for each baud in QPSK. The standard specifies 1 Hz for each baud; this means that, theoretically, downstream data can be sent at 12 Mbps (2 bits/Hz × 6 MHz). However, the data rate is usually less than 12 Mbps.

The theoretical upstream data rate is 12 Mbps.

Sharing

Both upstream and downstream bands are shared by the subscribers.

Upstream Sharing

The upstream data bandwidth is only 37 MHz. This means that there are only six 6-MHz channels available in the upstream direction. A subscriber needs to use one channel to send data in the upstream direction. The question is, How can six channels be shared in an area with 1000, 2000, or even 100,000 subscribers? The solution is timesharing. The band is divided into channels using FDM; these channels must be shared between subscribers in the same neighborhood. The cable provider allocates one channel, statically or dynamically, for a group of subscribers. If one subscriber wants to send data, she or he contends for the channel with others who want access; the subscriber must wait until the channel is available.

Downstream Sharing

We have a similar situation in the downstream direction. The downstream band has 33 channels of 6 MHz. A cable provider probably has more than 33 subscribers; therefore, each channel must be shared between a group of subscribers. However, the situation is different for the downstream direction; here we have a multicasting situation. If there are data for any of the subscribers in the group, the data are sent to that channel. Each subscriber is sent the data. But since each subscriber also has an address registered with the provider, the cable modem for the group matches the address carried with the data to the address assigned by the provider. If the address matches, the data are kept; otherwise, they are discarded.

CM and CMTS

To use a cable network for data transmission, we need two key devices: a CM and a CMTS.

CM

The **cable modem (CM)** is installed on the subscriber premises. It is similar to an ADSL modem. Figure 9.8 shows its location.

CMTS

The **cable modem transmission system (CMTS)** is installed inside the distribution hub by the cable company. It receives data from the Internet and passes them to the

Copyrighted material

Figure 9.8 *Cable modem*

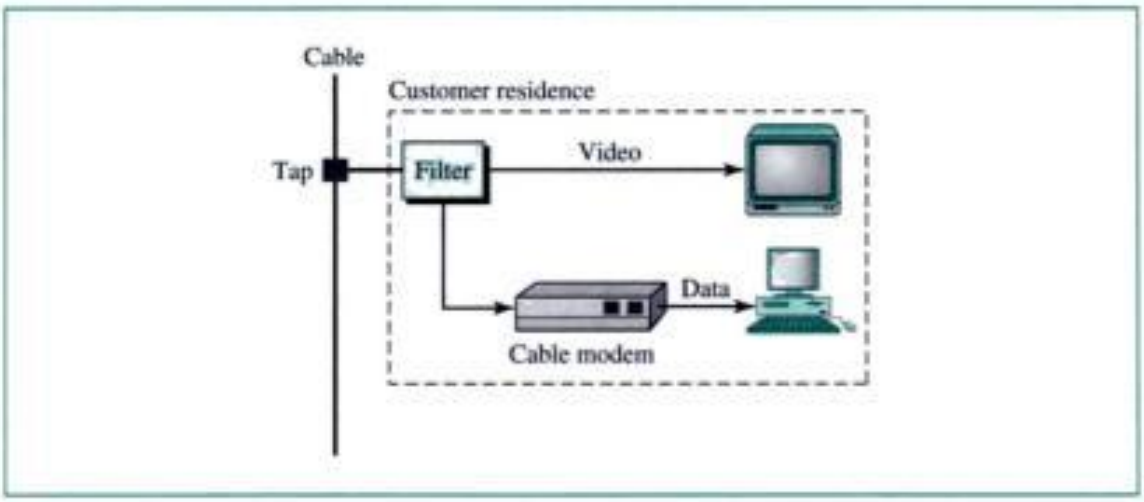

combiner, which sends them to the subscriber. The CMTS also receives data from the subscriber and passes them to the Internet. Figure 9.9 shows the location of the CMTS.

Figure 9.9 *CMTS*

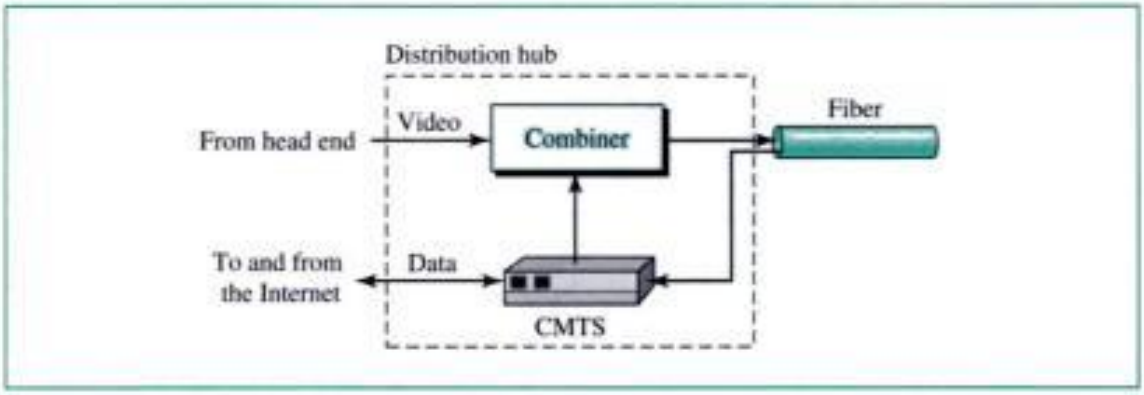

Data Transmission Schemes: DOCSIS

During the last few decades, several schemes have been designed to create a standard for data transmission over an HFC network. Prevalent is the one devised by Multimedia Cable Network Systems (MCNS), called **Data over Cable System Interface Specification (DOCSIS).** DOCSIS defines all the protocols necessary to transport data from a CMTS to a CM.

Upstream Communication

The following is a very simplified version of the protocol defined by DOCSIS for upstream communication. It describes the steps that must be followed by a CM:

1. The CM checks the downstream channels for a specific packet periodically sent by the CMTS. The packet asks any new CM to announce itself on a specific upstream channel.
2. The CMTS sends a packet to the CM, defining its allocated downstream and upstream channels.

Copyrighted material

3. The CM then starts a process, called **ranging,** which determines the distance between the CM and CMTS. This process is required for synchronization between all CMs and CMTSs for the **minislots** used for timesharing of the upstream channels. We will learn about this timesharing when we discuss contention protocols in Chapter 13.
4. The CM sends a packet to the ISP, asking for the Internet address.
5. The CM and CMTS then exchange some packets to establish security parameters, which are needed for a public network such as cable TV.
6. The CM sends its unique identifier to the CMTS.
7. Upstream communication can start in the allocated upstream channel; the CM can contend for the minislots to send data.

Downstream Communication

In the downstream direction, the communication is much simpler. There is no contention because there is only one sender. The CMTS sends the packet with the address of the receiving CM, using the allocated downstream channel.

9.3 SONET

The high bandwidths of fiber-optic cable are suitable for today's highest data rate technologies (such as video conferencing) and for carrying large numbers of lower-rate technologies at the same time. For this reason, the importance of optical fibers grows in conjunction with the development of technologies requiring high data rates or wide bandwidths for transmission. With their prominence came a need for standardization. The ANSI standard is called the **Synchronous *O*ptical *Net*work (SONET).** The ITU-T standard is called the **Synchronous Digital Hierarchy (SDH).** These two standards are nearly identical.

Among the concerns addressed by the designers of SONET and SDH, three are of particular interest to us. First, SONET is a synchronous network. A single clock is used to handle the timing of transmissions and equipment across the entire network. Network-wide synchronization adds a level of predictability to the system. This predictability, coupled with a powerful frame design, enables individual channels to be multiplexed, thereby improving speed and reducing cost.

Second, SONET contains recommendations for the standardization of fiber-optic transmission system (FOTS) equipment sold by different manufacturers. Third, the SONET physical specifications and frame design include mechanisms that allow it to carry signals from incompatible tributary systems (such as DS-0 and DS-1). It is this flexibility that gives SONET a reputation for universal connectivity.

SONET is a good example of a time-division multiplexing (TDM) system. The bandwidth of the fiber is considered as one channel divided into time slots to define subchannels. SONET, as a TDM network, is a synchronous system controlled by a master clock with a very high level of accuracy. The transmission of bits is controlled by the master clock.

Copyrighted material

SONET is a synchronous TDM system controlled by a master clock.

SONET Devices

SONET transmission relies on three basic devices: **synchronous transport signal (STS)** multiplexers, regenerators, and add/drop multiplexers. Figure 9.10 shows an example of a SONET.

Figure 9.10 *A SONET*

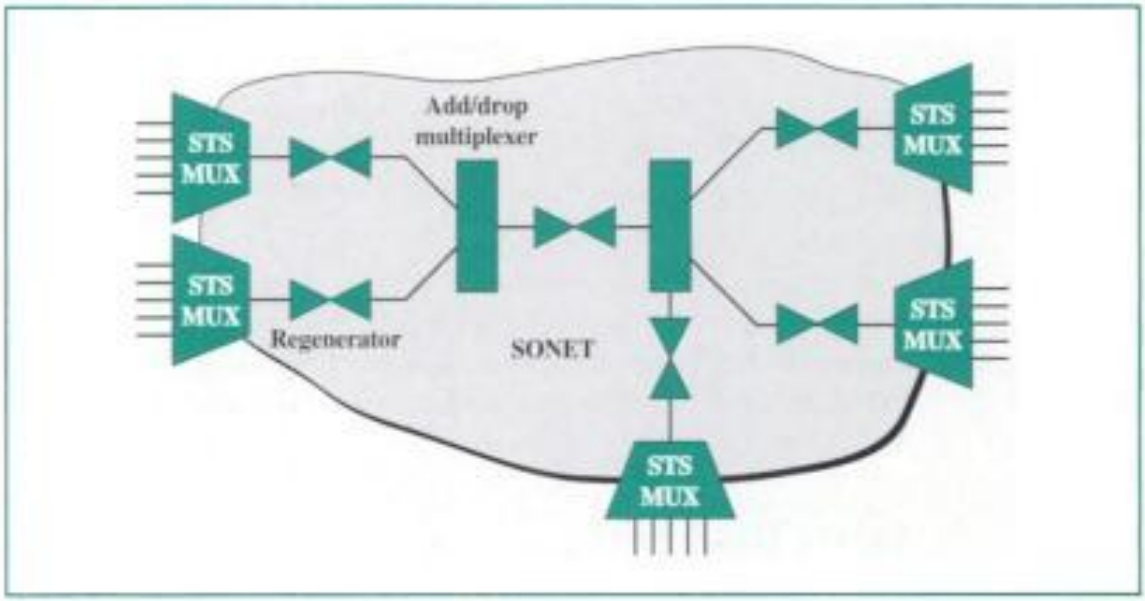

- **STS multiplexer/demultiplexer.** An STS multiplexer/demultiplexer either multiplexes signals from multiple sources into an STS or demultiplexes an STS into different destination signals.
- **Regenerator.** An STS **regenerator** is a repeater (see Chapter 16) that takes a received optical signal and regenerates it. Regenerators in this system, however, add a function to those of physical layer repeaters. A SONET regenerator replaces some of the existing overhead information (header information) with new information. These devices function at the data link layer.
- **Add/drop multiplexer.** An **add/drop multiplexer** can add signals coming from different sources into a given path or remove a desired signal from a path and redirect it without demultiplexing the entire signal.

SONET Frame

A SONET frame can be viewed as a matrix of nine rows of 90 octets each, for a total of 810 octets (see Fig. 9.11). Some of the octets are used for control; they are not positioned at the beginning or end of the frame (like a header or trailer).

The first three columns of the frame are used for administration overhead. The rest of the frame is called the **synchronous payload envelope (SPE).** The SPE contains transmission overhead and user data. The payload, however, does not have to start at

Copyrighted material

Figure 9.11 *Frame format*

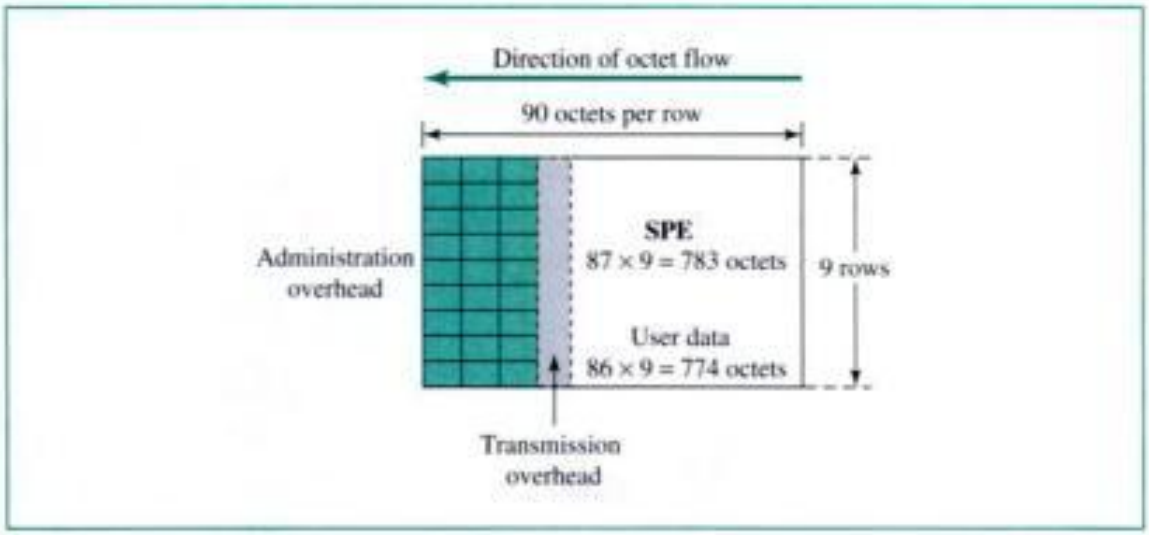

row 1, column 4; it can start anywhere in the frame and can even span two frames. This feature allows some flexibility; if the SPE arrives a little late, after a frame has already started, the SPE does not have to wait for the beginning of the next frame. A pointer (address) occupying columns 1 to 3 of row 4 can determine the beginning address (row and column) of the SPE.

Frame Transmission

SONET frames are transmitted one after another without any gap in between, even if there are no real data. Empty frames carry dummy data. In other words, a sequence of frames looks like a sequence of bits. However, the first 2 bytes of each frame, called alignment bytes, F628 in hexadecimal, define the beginning of each frame. The third byte is the frame identification.

Synchronous Transport Signals

SONET defines a hierarchy of signaling levels called synchronous transport signals (STSs). Each STS level (STS-1 to STS-192) supports a certain data rate, specified in megabits per second (see Table 9.1). The physical links defined to carry each level of STS are called **optical carriers (OCs).** OC levels describe the conceptual and physical specifications of the links required to support each level of signaling. Actual implementation of those specifications is left up to the manufacturers. Currently, the most popular implementations are OC-1, OC-3, OC-12, and OC-48.

STS-1

STS-1 or OC-1 is the lowest-rate service provided by SONET. STS-1 transmits 8000 frames per second. Figure 9.12 compares the raw, SPE, and user bit rates. The rates reflect the number of columns available. For example, the SPE bit rate is less than the raw bit rate due to the three columns for management.

Copyrighted material

Table 9.1 *SONET rates*

STS	*OC*	*Raw (Mbps)*	*SPE (Mbps)*	*User (Mbps)*
STS-1	OC-1	51.84	50.12	49.536
STS-3	OC-3	155.52	150.336	148.608
STS-9	OC-9	466.56	451.008	445.824
STS-12	OC-12	622.08	601.344	594.432
STS-18	OC-18	933.12	902.016	891.648
STS-24	OC-24	1244.16	1202.688	1188.864
STS-36	OC-36	1866.23	1804.032	1783.296
STS-48	OC-48	2488.32	2405.376	2377.728
STS-192	OC-192	9953.28	9621.604	9510.912

Figure 9.12

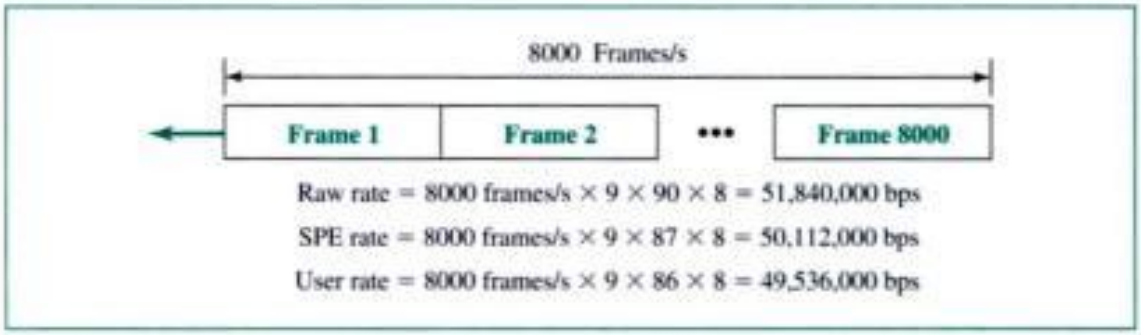

Virtual Tributaries

SONET is designed to carry broadband payloads. Current digital hierarchy data rates (DS-1 to DS-3), however, are lower than STS-1. To make SONET backward-compatible with the current hierarchy, its frame design includes a system of **virtual tributaries (VTs).** A virtual tributary is a partial payload that can be inserted into a frame and combined with other partial payloads to fill out the frame. Instead of using all 87 payload columns of an SPE frame for data from one source, we can subdivide the SPE and call each component a VT.

Four types of VTs have been defined to accommodate existing digital hierarchies (see Fig. 9.13). Notice that the number of columns allowed for each type of VT can be determined by doubling the type identification number (VT1.5 gets three columns, VT2 gets four columns, etc.).

- **VT1.5.** The VT1.5 accommodates the U.S. DS-1 service (1.544 Mbps).
- **VT2.** The VT2 accommodates the European CEPT-1 service (2.048 Mbps).
- **VT3.** The VT3 accommodates the DS-1C service (fractional DS-1, 3.152 Mbps).
- **VT6.** The VT6 accommodates the DS-2 service (6.312 Mbps).

When two or more tributaries are inserted into a single STS-1 frame, they are interleaved column by column. SONET provides mechanisms for identifying each VT and

Copyrighted material

Figure 9.13 *VT types*

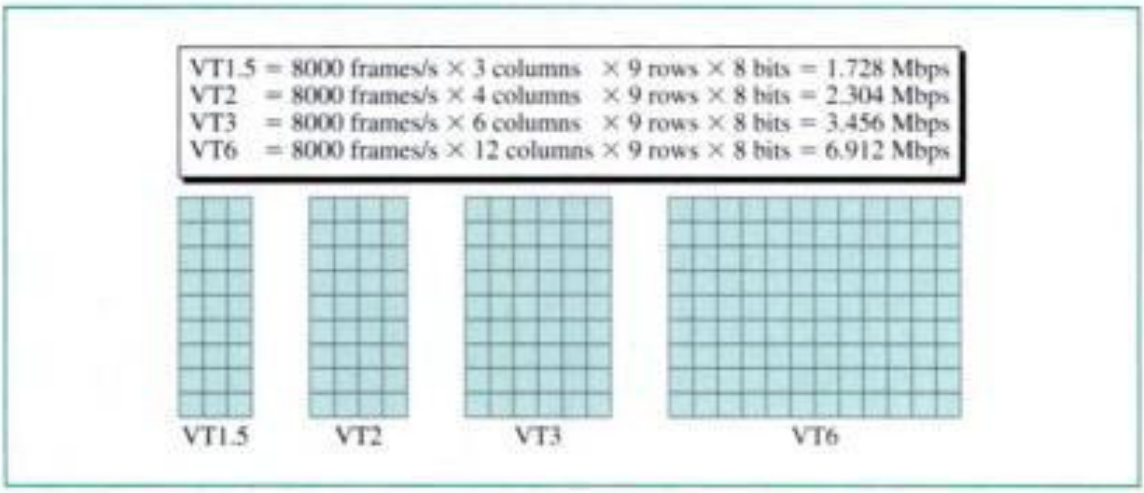

separating them without demultiplexing the entire stream. Discussion of these mechanisms and the control issues behind them is beyond the scope of this book.

Higher-Rate Services

Lower-rate STSs can be multiplexed to make them compatible with higher-rate systems. For example, three STS-1's can be combined into one STS-3, four STS-3's can be multiplexed into one STS-12, and so on. Figure 9.14 shows how three STS-1's are multiplexed into a single STS-3. To create an STS-12 out of lower-rate services, we could multiplex either 12 STS-1's or 4 STS-3's.

Figure 9.14 *STS multiplexing*

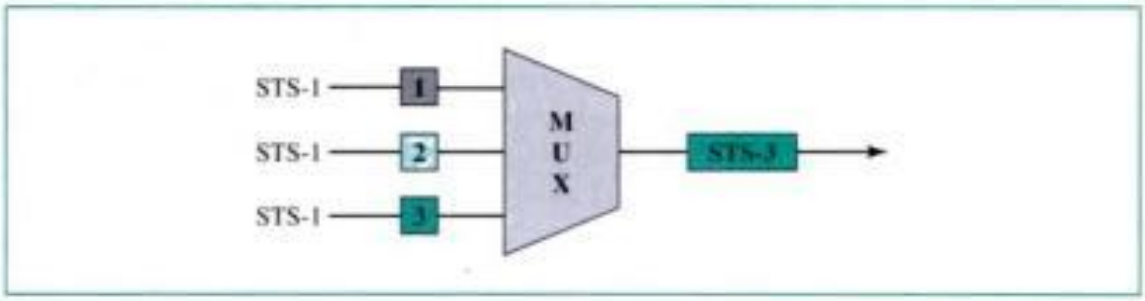

9.4 KEY TERMS

add/drop multiplexer
asymmetric DSL (ADSL)
cable modem (CM)
cable modem transmission system (CMTS)
cable TV
community antenna TV (CATV)
Data Over Cable System Interface Specification (DOCSIS)
digital subscriber line (DSL)
digital subscriber line access multiplexer (DSLAM)

Copyrighted material

discrete multitone technique (DMT)
distribution hub
downstream data band
fiber node
head end
high-bit-rate DSL (HDSL)
hybrid fiber-coaxial (HFC) network
minislot
optical carrier (OC)
ranging
regenerator
regional cable head (RCH)
STS multiplexer/demultiplexer
symmetric DSL (SDSL)
Synchronous Digital Hierarchy (SDH)
Synchronous Optical Network (SONET)
synchronous payload envelope (SPE)
synchronous transport signal (STS)
upstream data band
very-high-bit-rate DSL (VDSL)
video band
virtual tributary (VT)

9.5 SUMMARY

- A home computer can access the Internet through the existing telephone system or through a cable TV system.
- DSL supports high-speed digital communications over the existing telephone local loops.
- ADSL technology allows customers a bit rate of up to 1 Mbps in the upstream direction and up to 8 Mbps in the downstream direction.
- ADSL uses a modulation technique called DMT which combines QAM and FDM.
- SDSL, HDSL, and VDSL are other DSL technologies.
- Theoretically, the coaxial cable used for cable TV allows Internet access with a bit rate of up to 12 Mbps in the upstream direction and up to 30 Mbps in the downstream direction.
- An HFC network allows Internet access through a combination of fiber-optic and coaxial cables.
- The coaxial cable bandwidth is divided into a video band, a downstream data band, and an upstream data band. Both upstream and downstream bands are shared among subscribers.
- DOCSIS defines all protocols needed for data transmission on an HFC network.
- Synchronous Optical Network (SONET) is a synchronous high-data-rate TDM network for fiber-optic networks.
- SONET has defined a hierarchy of signals (similar to the DS hierarchy) called synchronous transport signals (STSs).
- Optical carrier (OC) levels are the implementation of STSs.
- A SONET frame can be viewed as a matrix of nine rows of 90 octets each.
- A SONET system can use the following equipment:
  a. STS multiplexer—combines several optical signals to make an STS signal.
  b. Regenerator—removes noise from an optical signal.
  c. Add/drop multiplexer—adds STSs from different paths and removes STSs from a path.

Copyrighted material

- SONET is backward compatible with the current DS hierarchy through the virtual tributary (VT) concept. VTs are a partial payload consisting of an *m*-by-*n* block of octets. An STS payload can be a combination of several VTs.
- STSs can be multiplexed to get a new STS with a higher data rate.

9.6 PRACTICE SET

Review Questions

1. Name two technologies that have a higher data rate than traditional modems.
2. Why is ADSL unsuitable for businesses? Which DSL technology is best suited for businesses?
3. Who are the main users of ADSL technology?
4. How do filters limit the bandwidth size of the local loop?
5. What is the modulation technique used by ADSL technology?
6. What kinds of devices at the customer premises are needed by an ADSL subscriber?
7. What is the purpose of a DSLAM?
8. How is HDSL superior to a T-1 line?
9. What is the function of the head end in a traditional cable TV network?
10. Discuss the transmission media in an HFC network.
11. Why is QAM not used in the modulation of upstream data in an HFC network?
12. How is a CM different from a CMTS?
13. What is the purpose of DOCSIS?
14. How is an STS multiplexer different from an add/drop multiplexer, since both can add signals?
15. What is the relationship between STS levels and OC levels?
16. What is the relationship between SONET and Synchronous Digital Hierarchy (SDH)?
17. Why is SONET called a synchronous network?
18. What is the function of a SONET regenerator?
19. How is an STS-1 frame organized?
20. What is a virtual tributary?
21. How can lower-data-rate STSs be made compatible with higher-data-rate STSs?

Multiple-Choice Questions

22. _____ has a higher transmission rate in the downstream direction than in the upstream direction.
    a. VDSL
    b. ADSL
    c. SDSL
    d. (a) and (b)

Copyrighted material

23. _____ is suitable for businesses that require comparable upstream and downstream data rates.
    a. VDSL
    b. ADSL
    c. SDSL
    d. (a) and (b)
24. _____ limit the bandwidth of the local loop to 4 KHz.
    a. Fiber nodes
    b. Filters
    c. Repeaters
    d. Hubs
25. DMT is a modulation technique that combines elements of _____ and _____.
    a. FDM; TDM
    b. QDM; QAM
    c. FDM; QAM
    d. PSK; FSK
26. The largest portion of the bandwidth for ADSL carries _____.
    a. Voice communication
    b. Upstream data
    c. Downstream data
    d. Control data
27. The actual bit rate of ADSL downstream data is _____.
    a. 64 Kbps to 1 Mbps
    b. 6 to 30 Kbps
    c. 31 Kbps to 255 Mbps
    d. 500 Kbps to 8 Mbps
28. _____ is a device at the telephone company site that can packetize data to be sent to the ISP server.
    a. A DSLAM
    b. An ADSL modem
    c. A filter
    d. A splitter
29. _____ was designed as an alternative to the T-1 line.
    a. VDSL
    b. ADSL
    c. SDSL
    d. HDSL
30. HDSL encodes data using _____.
    a. 4B/5B
    b. 2B1Q

Copyrighted material

c. 1B2Q
d. 6B/8T

31. _____ encoded signal is more susceptible to attenuation than _____ encoded signal.
    a. An AMI; a 2B2Q
    b. A 2B1Q; an AMI
    c. An AMI; a 2B1Q
    d. None of the above
32. Another name for the cable TV office is the _____.
    a. Splitter
    b. Fiber node
    c. Combiner
    d. Head end
33. A traditional cable TV network transmits signals _____.
    a. Upstream
    b. Downstream
    c. Upstream and downstream
    d. None of the above
34. An HFC network uses _____ as the medium from the switch to the fiber node.
    a. Optical fiber
    b. Coaxial cable
    c. UTP
    d. STP
35. In an HFC network, the distribution hub handles the _____ of signals.
    a. Modulation
    b. Distribution
    c. Splitting
    d. (a) and (b)
36. A TV channel in an HFC network needs a _____-MHz bandwidth.
    a. 6
    b. 100
    c. 250
    d. 369
37. _____ data go from the subscriber to the Internet.
    a. Upstream
    b. Downstream
    c. Midstream
    d. None of the above
38. In an HFC network, the upstream data are modulated using the _____ modulation technique.

Copyrighted material

a. QAM
b. QPSK
c. PCM
d. ASK

39. The standard for data transmission over an HFC network is called _____.
    a. MCNS
    b. DOCSIS
    c. CMTS
    d. ADSL
40. The _____ is an HFC network device installed inside the distribution hub that receives data from the Internet and passes them to the combiner.
    a. CM
    b. CMTS
    c. DOCSIS
    d. MCNS
41. SONET is a standard for _____ networks.
    a. Twisted-pair cable
    b. Coaxial cable
    c. Ethernet
    d. Fiber-optic cable
42. SONET is an acronym for _____ Network.
    a. Synchronous Optical
    b. Standard Optical
    c. Symmetric Open
    d. Standard Open
43. In a SONET system, _____ can remove signals from a path.
    a. An STS multiplier
    b. A regenerator
    c. An add/drop multiplexer
    d. A repeater
44. The synchronous payload envelope of an STS-1 frame contains _____.
    a. Pointers
    b. User data
    c. Overhead
    d. (b) and (c)

Exercises

45. Show how STS-9's can be multiplexed to create an STS-36. Is there any extra overhead involved in this type of multiplexing? Why or why not?
46. What is the duration of a frame in STS-1?

Copyrighted material

47. What is the duration of a frame in STS-3, STS-9, . . . , STS-192?
48. How many VT1.5's can be carried in an STS-1 frame?
49. How many VT2's can be carried in an STS-1 frame?
50. How many VT3's can be carried in an STS-1 frame?
51. How many VT6's can be carried in an STS-1 frame?
52. A user needs to send data at 3 Mbps. Which VT (or combination of VTs) can be used?
53. A user needs to send data at 7 Mbps. Which VT (or combination of VTs) can be used?
54. A user needs to send data at 12 Mbps. Which VT (or combination of VTs) can be used?
55. Which VT transmits at almost the same data rate as a T-1 line?
56. Which VT or STS transmits at almost the same data rate as a T-3 line?
57. A company wants to use SONET to multiplex up to 100 digitized voices. Which VT (or combination of VTs) is suitable for this company?
58. Draw a SONET using all the following devices. Label all lines, sections, and paths.
    a. Three STS multiplexers (two as input and one as output)
    b. Four add/drop multiplexers
    c. Five regenerators

Copyrighted material

PART 3

Data Link Layer

The data link layer lies between the network layer and the physical layer in the Internet model. It receives services from the physical layer and provides services to the network layer. Figure 1 shows the position of the data link layer in the Internet model.

Figure 1 *Position of data link layer*

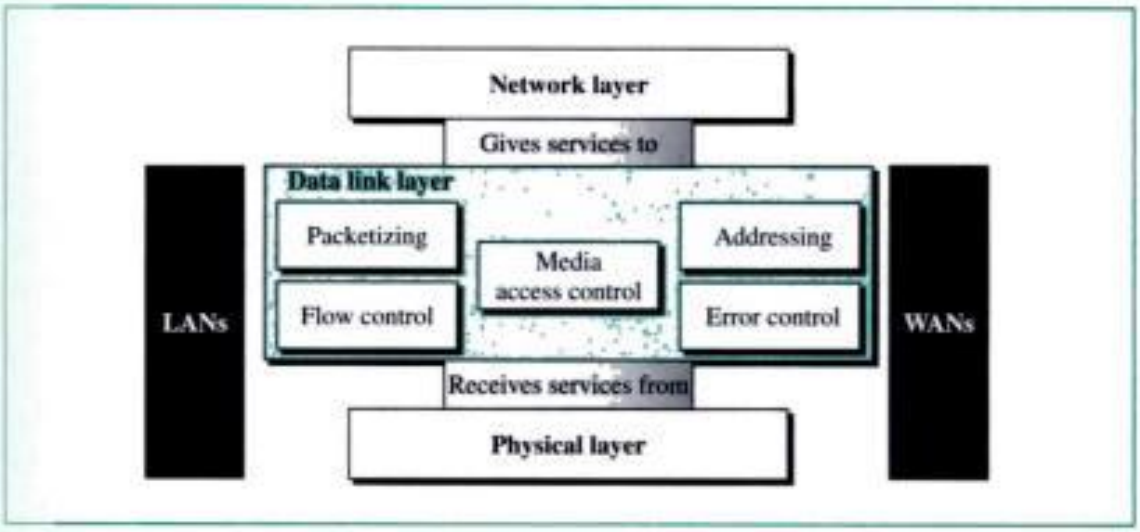

The **data link layer** is responsible for carrying a packet from one hop (computer or router) to the next hop. Unlike the network layer which has a global responsibility, the data link layer has a local responsibility. Its responsibility lies between two hops. In other words, because LANs and WANs in the Internet are delimited by hops, we can say that the responsibility of the data link layer is to carry a packet through a LAN or WAN.

The journey through a LAN or a WAN (between two hops) must preserve the integrity of the packet; the data link layer must make sure that the packet arrives safe and sound. If the packet is corrupted during the transmission, it must either be corrected or retransmitted. The data link layer must also make sure that the next hop is not overwhelmed with data by the previous hop; the flow of data must be controlled.

Access to a LAN or a WAN for the sending of data is also an issue. If several computers or routers are connected to a common medium (link), and more than one want to send data at the same time, which has the right to send? What is the access method?

Copyrighted material

allowed to overwhelm the receiver. The receiving device must be able to inform the sending device before some limit is reached and request that the transmitting device send fewer frames or stop temporarily. We discuss flow control as part of data link control in Chapter 11.

Medium Access Control

When computers use a shared medium (cable or air), there must be a method to control access to the medium at any moment. To prevent this conflict or collision on a network, there is a need for a medium access control (MAC) method. This method defines the procedure a computer follows when it needs to send a frame or frames. We devote two chapters to this issue, Chapter 12 and Chapter 13.

Local Area Networks

Local Area Networks (LANs) operate at the physical and data link layer. The obvious place to discuss local area networks is after these layers have been discussed. We have devoted Chapter 14 to Ethernet, the most common LAN today and Chapter 15 to wireless LANs, the most promising LAN today. After discussing these two subjects, we show how to connect LANs in Chapter 16.

IEEE Standards

The Internet does not spell out specifications for LANs or WANs. The Internet accepts any LAN as a communications pathway for transferring its network layer packet. There must other protocols to handle LANs. In 1985, the Computer Society of the IEEE started a project, called Project 802, to set standards to enable intercommunication between equipment from a variety of manufacturers. The IEEE has subdivided the data link layer into two sublayers: logical link control (LLC) and media access control (MAC) as shown in Figure 3. The LLC is nonarchitecture specific; that is, it is the same for all IEEE-defined LANs. It is not widely used today. The MAC sublayer, on the other hand, contains a number of distinct modules; each carries proprietary information specific to the LAN product being used. Figure 4 shows some IEEE 802 standards defined for specific LANs.

Figure 3 *LLC and MAC sublayers*

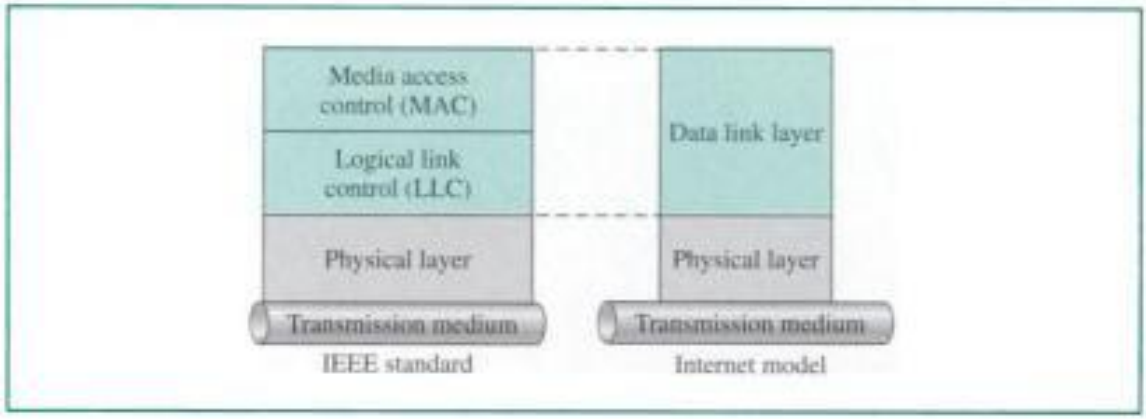

Copyrighted material

allowed to overwhelm the receiver. The receiving device must be able to inform the sending device before some limit is reached and request that the transmitting device send fewer frames or stop temporarily. We discuss flow control as part of data link control in Chapter 11.

Medium Access Control

When computers use a shared medium (cable or air), there must be a method to control access to the medium at any moment. To prevent this conflict or collision on a network, there is a need for a medium access control (MAC) method. This method defines the procedure a computer follows when it needs to send a frame or frames. We devote two chapters to this issue, Chapter 12 and Chapter 13.

Local Area Networks

Local Area Networks (LANs) operate at the physical and data link layer. The obvious place to discuss local area networks is after these layers have been discussed. We have devoted Chapter 14 to Ethernet, the most common LAN today and Chapter 15 to wireless LANs, the most promising LAN today. After discussing these two subjects, we show how to connect LANs in Chapter 16.

IEEE Standards

The Internet does not spell out specifications for LANs or WANs. The Internet accepts any LAN as a communications pathway for transferring its network layer packet. There must other protocols to handle LANs. In 1985, the Computer Society of the IEEE started a project, called Project 802, to set standards to enable intercommunication between equipment from a variety of manufacturers. The IEEE has subdivided the data link layer into two sublayers: logical link control (LLC) and media access control (MAC) as shown in Figure 3. The LLC is nonarchitecture specific; that is, it is the same for all IEEE-defined LANs. It is not widely used today. The MAC sublayer, on the other hand, contains a number of distinct modules; each carries proprietary information specific to the LAN product being used. Figure 4 shows some IEEE 802 standards defined for specific LANs.

Figure 3 *LLC and MAC sublayers*

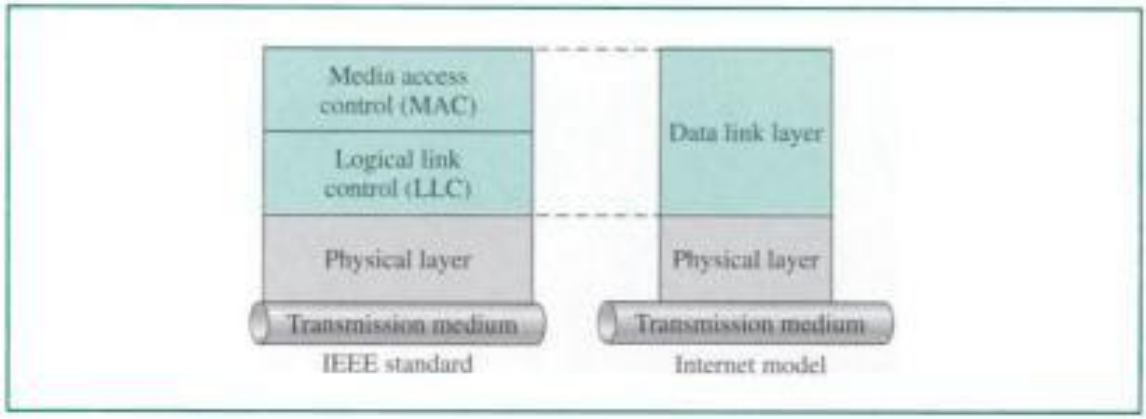

Copyrighted material

Figure 4 *IEEE standards for LANs*

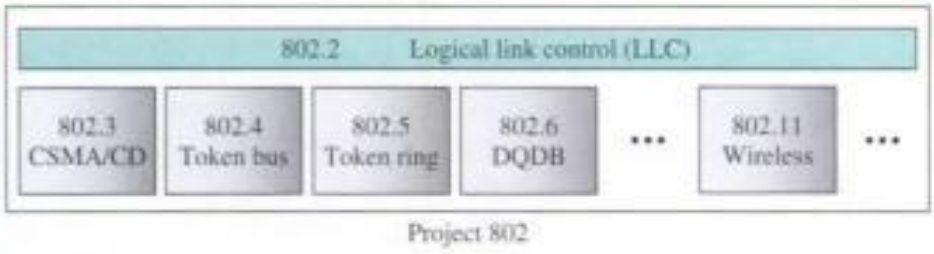

Wide Area Networks

Wide Area Networks (WANs) also operate in the physical and data link layer discussed in this part of the text. We discuss the mobile telephone systems an lites, as wireless WANs, in Chapter 17. We discuss Frame Relay and ATM as sv WANs in Chapter 18.

Chapters

Part III of the book covers nine chapters 10–18. Chapters 10–13 discuss general s provided by the data link layer: error control, flow control, and media access. Cha is about error detection, a prelude to error control. Chapter 11 is about flow and er trol. Chapter 12 explains media access control for point-to-point connections. Cha does the same for multiple access connections.

Chapters 14 to 16 are devoted to LANs. Chapter 14 discuss the most co LAN, Ethernet. Chapter 15 discusses wireless LANs. Chapter 16 discusses the c tion of LANs.

Chapters 17 and 18 are devoted to WANs. Chapter 17 is about wireless mobile telephone networks and satellite networks. Chapter 18 is about sw WANs, Frame Relay, and ATM.

Copyrighted material

CHAPTER 10

Error Detection and Correction

Networks must be able to transfer data from one device to another with complete accuracy. A system that cannot guarantee that the data received by one device are identical to the data transmitted by another device is essentially useless. Yet anytime data are transmitted from one node to the next, they can become corrupted in passage. Many factors can alter or wipe out one or more bits of a given data unit. Reliable systems must have a mechanism for detecting and correcting such **errors.**

Data can be corrupted during transmission. For reliable communication, errors must be detected and corrected.

10.1 TYPES OF ERRORS

Whenever bits flow from one point to another, they are subject to unpredictable changes because of interference. This interference can change the shape of the signal. In a single-bit error, a 0 is changed to a 1 or a 1 to a 0. In a burst error, multiple bits are changed. For example, a 0.01-s burst of impulse noise on a transmission with a data rate of 1200 bps might change all or some of 12 bits of information.

Single-Bit Error

The term **single-bit error** means that only one bit of a given data unit (such as a byte, character, data unit, or packet) is changed from 1 to 0 or from 0 to 1.

In a single-bit error, only one bit in the data unit has changed.

Figure 10.1 shows the effect of a single-bit error on a data unit. To understand the impact of the change, imagine that each group of 8 bits is an ASCII character with a 0 bit added to the left. In the figure, 00000010 (ASCII *STX*) was sent, meaning *start of text,* but 00001010 (ASCII *LF*) was received, meaning *line feed.* (For more information about ASCII code, see Appendix A.)

Copyrighted material

Figure 10.1 *Single-bit error*

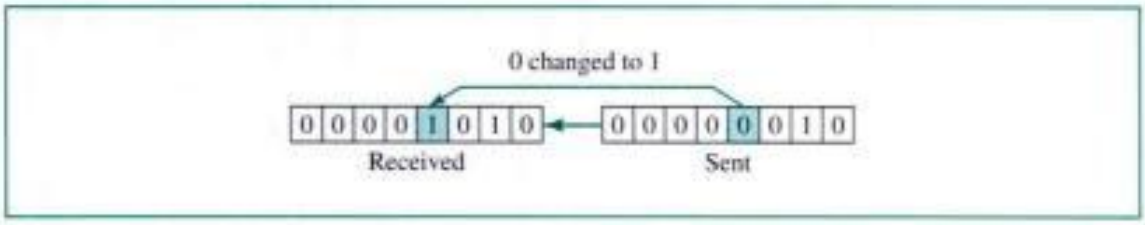

Single-bit errors are the least likely type of error in serial data transmission. To understand why, imagine a sender sends data at 1 Mbps. This means that each bit lasts only 1/1,000,000 s, or 1 μs. For a single-bit error to occur, the noise must have a duration of only 1 μs, which is very rare; noise normally lasts much longer than this.

However, a single-bit error can happen if we are sending data using parallel transmission. For example, if eight wires are used to send all 8 bits of 1 byte at the same time and one of the wires is noisy, one bit can be corrupted in each byte. Think of parallel transmission inside a computer, between CPU and memory, for example.

Burst Error

The term **burst error** means that 2 or more bits in the data unit have changed from 1 to 0 or from 0 to 1.

A burst error means that 2 or more bits in the data unit have changed.

Figure 10.2 shows the effect of a burst error on a data unit. In this case, 0100010001000011 was sent, but 0101110101000011 was received. Note that a burst error does not necessarily mean that the errors occur in consecutive bits. The length of the burst is measured from the first corrupted bit to the last corrupted bit. Some bits in between may not have been corrupted.

Figure 10.2 *Burst error of length 5*

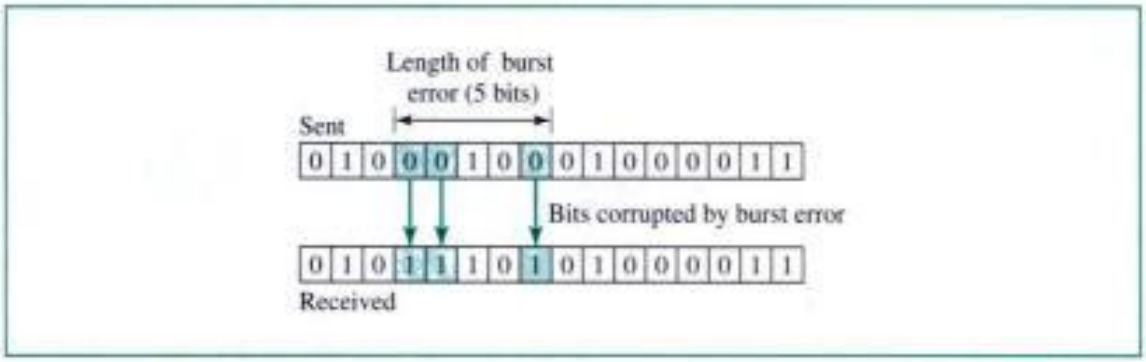

Burst error is most likely to occur in a serial transmission. The duration of noise is normally longer than the duration of one bit, which means that when noise affects data, it affects a set of bits. The number of bits affected depends on the data rate and duration of noise. For example, if we are sending data at 1 Kbps, a noise of 1/100 s can affect 10 bits; if we are sending data at 1 Mbps, the same noise can affect 10,000 bits.

Copyrighted material

10.2 DETECTION

Although the goal of error checking is to correct errors, most of the time, we first need to detect errors. Error detection is simpler than error correction and is the first step in the error correction process.

Redundancy

One **error detection** mechanism would be to send every data unit twice. The receiving device would then be able to do a bit-for-bit comparison between the two versions of the data. Any discrepancy would indicate an error, and an appropriate correction mechanism could be set in place. This system would be completely accurate (the odds of errors being introduced onto exactly the same bits in both sets of data are infinitesimally small), but it would also be insupportably slow. Not only would the transmission time double, but also the time it takes to compare every unit bit by bit must be added.

The concept of including extra information in the transmission for error detection is a good one. But instead of repeating the entire data stream, a shorter group of bits may be appended to the end of each unit. This technique is called **redundancy** because the extra bits are redundant to the information; they are discarded as soon as the accuracy of the transmission has been determined.

Error detection uses the concept of redundancy, which means adding extra bits for detecting errors at the destination.

Figure 10.3 shows the process of using redundant bits to check the accuracy of a data unit. Once the data stream has been generated, it passes through a device that analyzes it and adds on an appropriately coded redundancy check. The data unit, now enlarged by several bits, travels over the link to the receiver. The receiver puts

Figure 10.3 *Redundancy*

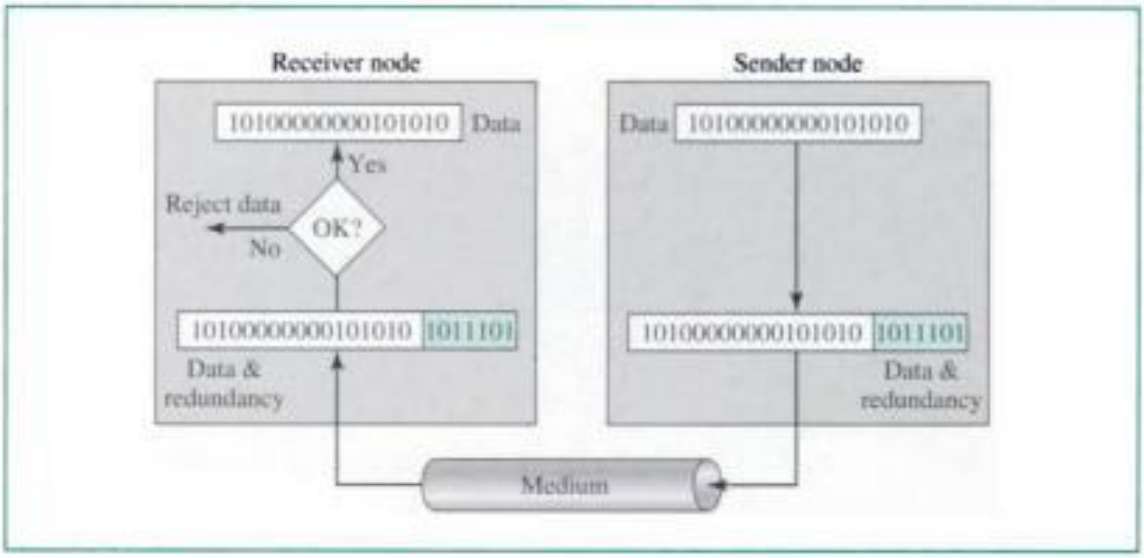

Copyrighted material

the entire stream through a checking function. If the received bit stream passes the checking criteria, the data portion of the data unit is accepted and the redundant bits are discarded.

Three types of redundancy checks are common in data communications: parity check, cyclic redundancy check (CRC), and checksum (see Fig. 10.4).

Figure 10.4 *Detection methods*

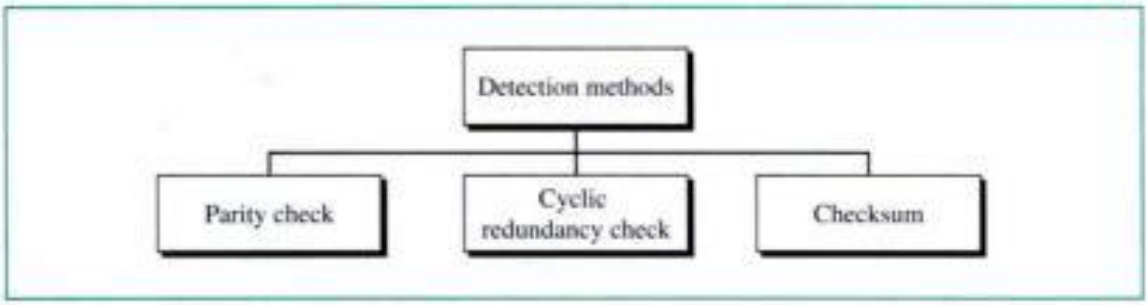

Parity Check

The most common and least expensive mechanism for error detection is the **parity check.** Parity checking can be simple or two-dimensional.

Simple Parity Check

In this technique, a redundant bit, called a **parity bit,** is added to every data unit so that the total number of 1s in the unit (including the parity bit) becomes even (or odd). Suppose we want to transmit the binary data unit 1100001 [ASCII *a* (97)]; see Figure 10.5.

Figure 10.5 *Even-parity concept*

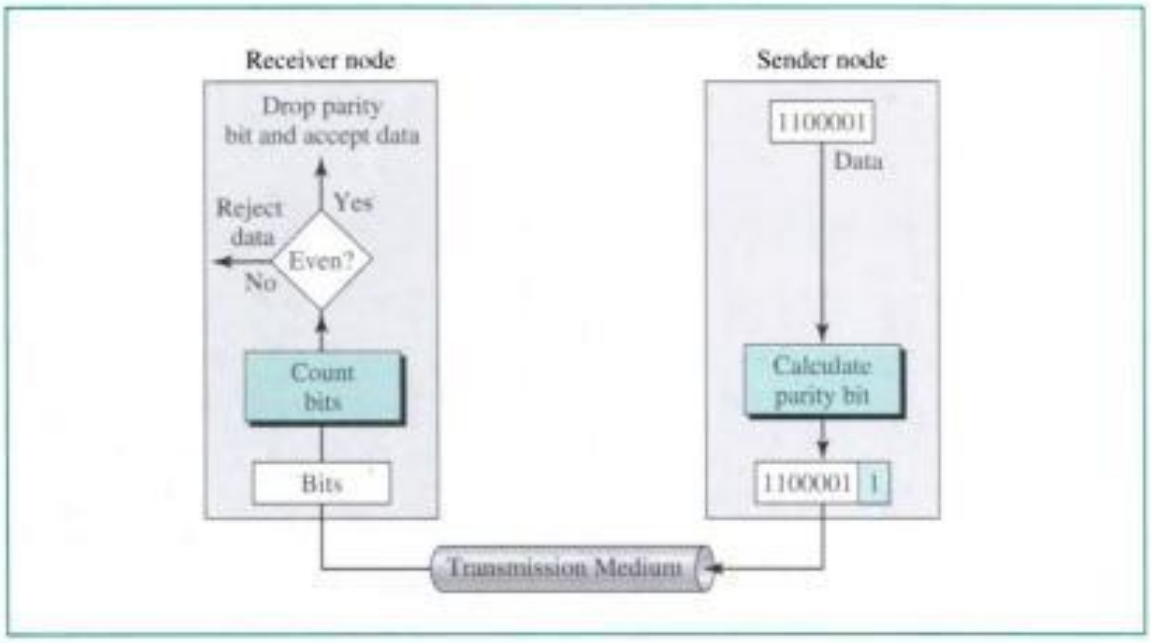

Copyrighted material

Adding the number of 1s gives us 3, an odd number. Before transmitting, we pass the data unit through a parity generator. The parity generator counts the 1s and appends the parity bit (a 1 in this case) to the end. The total number of 1s is now 4, an even number. The system now transmits the entire expanded unit across the network link. When it reaches its destination, the receiver puts all 8 bits through an **even-parity** checking function. If the receiver sees 11000011, it counts four 1s, an even number, and the data unit passes. But what if the data unit has been damaged in transit? What if, instead of 11000011, the receiver sees 11001011? Then when the parity checker counts the 1s, it gets 5, an odd number. The receiver knows that an error has been introduced into the data somewhere and therefore rejects the whole unit. Note that for the sake of simplicity, we are discussing here even-parity checking, where the number of 1s should be an even number. Some systems may use **odd-parity** checking, where the number of 1s should be odd. The principle is the same.

> In parity check, a parity bit is added to every data unit so that the total number of 1s is even (or odd for odd-parity).

Example 1

Suppose the sender wants to send the word *world*. In ASCII (see Appendix A), the five characters are coded as

```
← 1110111  1101111  1110010  1101100  1100100
      w        o        r        l        d
```

Each of the first four characters has an even number of 1s, so the parity bit is a 0. The last character (d), however, has three 1s (an odd number), so the parity bit is a 1 to make the total number of 1s even. The following shows the actual bits sent (the parity bits are underlined).

```
← 1110111_0  1101111_0  1110010_0  1101100_0  1100100_1
```

Example 2

Now suppose the word *world* in Example 1 is received by the receiver without being corrupted in transmission.

```
← 1110111_0  1101111_0  1110010_0  1101100_0  1100100_1
```

The receiver counts the 1s in each character and comes up with even numbers (6, 6, 4, 4, 4). The data are accepted.

Example 3

Now suppose the word *world* in Example 1 is corrupted during transmission.

```
← 1111111_0  1101111_0  1110110_0  1101100_0  1100100_1
```

The receiver counts the 1s in each character and comes up with even and odd numbers (7, 6, 5, 4, 4). The receiver knows that the data are corrupted, discards them, and asks for retransmission.

Copyrighted material

Performance

Simple parity check can detect all single-bit errors. It can also detect burst errors as long as the total number of bits changed is odd (1, 3, 5, etc.). Let's say we have an even-parity data unit where the total number of 1s, including the parity bit, is 6: 1000111011. If any 3 bits change value, the resulting parity will be odd and the error will be detected: 1*111*111011:9, *011*0111011:7, 1*100010*011:5—all odd. The checker would return a result of 1, and the data unit would be rejected. The same holds true for any odd number of errors.

Suppose, however, that 2 bits of the data unit are changed: 1*11*0111011:8, 1*00011*011:6, 1000*011010*:4. In each case the number of 1s in the data unit is still even. The parity checker will add them and return an even number although the data unit contains two errors. This method cannot detect errors where the total number of bits changed is even. If any two bits change in transmission, the changes cancel each other and the data unit will pass a parity check even though the data unit is damaged. The same holds true for any even number of errors.

Simple parity check can detect all single-bit errors. It can detect burst errors only if the total number of errors in each data unit is odd.

Two-Dimensional Parity Check

A better approach is the **two-dimensional parity check.** In this method, a block of bits is organized in a table (rows and columns). First we calculate the parity bit for each data unit. Then we organize them into a table. For example, as shown in Figure 10.6, we have four data units shown in four rows and eight columns. We then calculate the parity bit for each column and create a new row of 8 bits; they are the parity bits for the whole block. Note that the first parity bit in the fifth row is calculated based on all first

Figure 10.6 *Two-dimensional parity*

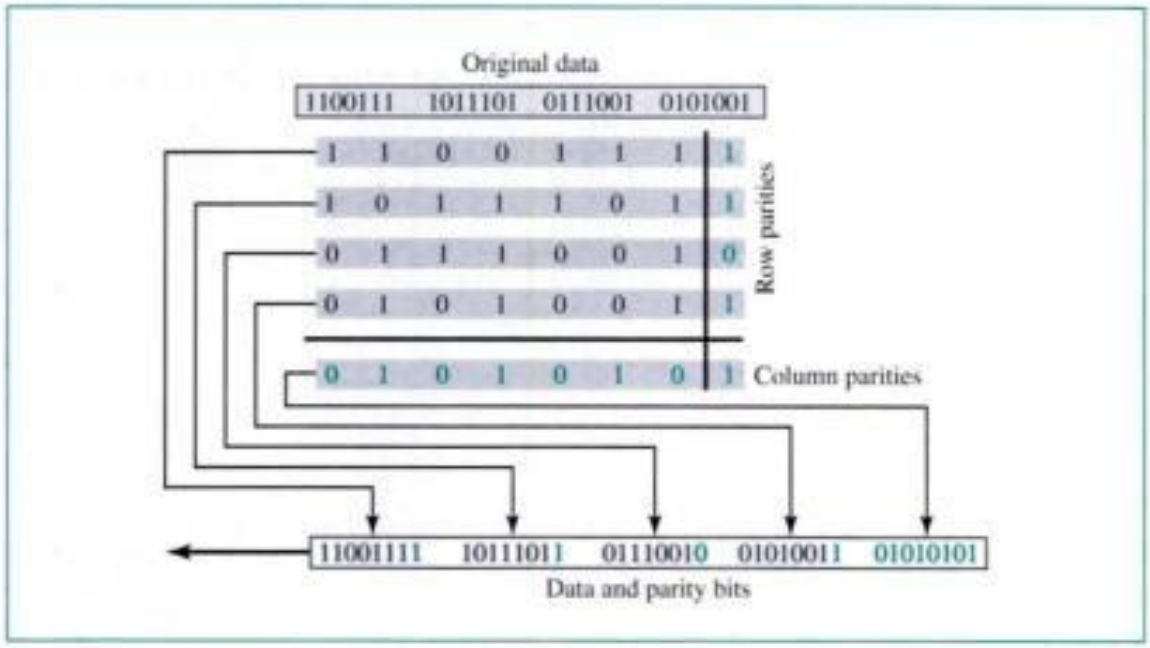

Copyrighted material

bits; the second parity bit is calculated based on all second bits; and so on. We then attach the 8 parity bits to the original data and send them to the receiver.

Example 4

Suppose the following block is sent:

```
← 10101001 00111001 11011101 11100111 10101010
```

However, it is hit by a burst noise of length 8, and some bits are corrupted.

```
← 10100011 10001001 11011101 11100111 10101010
```

When the receiver checks the parity bits, some of the bits do not follow the even-parity rule and the whole block is discarded (the nonmatching bits are shown in bold).

```
← 10100011  10001001  11011101  11100111  10101010
                                          (parity bits)
```

In two-dimensional parity check, a block of bits is divided into rows and a redundant row of bits is added to the whole block.

Performance

Two-dimensional parity check increases the likelihood of detecting burst errors. As we showed in Example 4, a redundancy of n bits can easily detect a burst error of n bits. A burst error of more than n bits is also detected by this method with a very high probability. There is, however, one pattern of errors that remains elusive. If 2 bits in one data unit are damaged and two bits *in exactly the same positions* in another data unit are also damaged, the checker will not detect an error. Consider, for example, two data units: 11110000 and 11000011. If the first and last bits in each of them are changed, making the data units read *0*1110001 and *0*1000010, the errors cannot be detected by this method.

Cyclic Redundancy Check (CRC)

The third and most powerful of the redundancy checking techniques is the **cyclic redundancy check (CRC).** Unlike the parity check which is based on addition, CRC is based on binary division. In CRC, instead of adding bits to achieve a desired parity, a sequence of redundant bits, called the CRC or the CRC remainder, is appended to the end of a data unit so that the resulting data unit becomes exactly divisible by a second, predetermined binary number. At its destination, the incoming data unit is divided by the same number. If at this step there is no remainder, the data unit is assumed to be intact and is therefore accepted. A remainder indicates that the data unit has been damaged in transit and therefore must be rejected.

The redundancy bits used by CRC are derived by dividing the data unit by a predetermined divisor; the remainder is the CRC. To be valid, a CRC must have two qualities: It must have exactly one less bit than the divisor, and appending it to the end of the data string must make the resulting bit sequence exactly divisible by the divisor.

Both the theory and the application of CRC error detection are straightforward. The only complexity is in deriving the CRC. To clarify this process, we will start with

Copyrighted material

an overview and add complexity as we go. Figure 10.7 provides an outline of th
basic steps.

Figure 10.7 *CRC generator and checker*

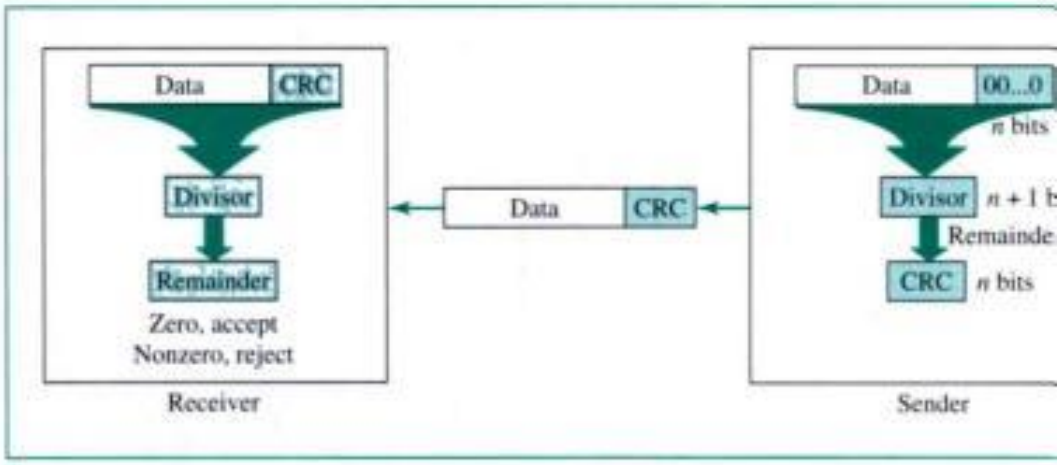

First, a string of n 0s is appended to the data unit. The number n is 1 less th
number of bits in the predetermined divisor, which is $n + 1$ bits.

Second, the newly elongated data unit is divided by the divisor, using a p
called binary division. The remainder resulting from this division is the CRC.

Third, the CRC of n bits derived in step 2 replaces the appended 0s at the
the data unit. Note that the CRC may consist of all 0s.

The data unit arrives at the receiver data first, followed by the CRC. The re
treats the whole string as a unit and divides it by the same divisor that was used
the CRC remainder.

If the string arrives without error, the CRC checker yields a remainder of ze
the data unit passes. If the string has been changed in transit, the division yields
zero remainder and the data unit does not pass.

The CRC Generator

A **CRC generator** uses modulo-2 division. Figure 10.8 shows this process. In th
step, the 4-bit divisor is subtracted from the first 4 bits of the dividend. Each bit
divisor is subtracted from the corresponding bit of the dividend without disturbi
next-higher bit. In our example, the divisor, 1101, is subtracted from the first 4
the dividend, 1001, yielding 100 (the leading 0 of the remainder is dropped). Th
unused bit from the dividend is then pulled down to make the number of bits
remainder equal to the number of bits in the divisor. The next step, therefore, is
1101, which yields 101, and so on.

In this process, the divisor always begins with a 1; the divisor is subtracted
portion of the previous dividend/remainder that is equal to it in length; the divis
only be subtracted from a dividend/remainder whose leftmost bit is 1. Anytime th
most bit of the dividend/remainder is 0, a string of 0s, of the same length as the c
replaces the divisor in that step of the process. For example, if the divisor is 4 bits
is replaced by four 0s. (Remember, we are dealing with bit patterns, not with quan
values; 0000 is not the same as 0.) This restriction means that, at any step, the le

Copyrighted material

Figure 10.8 *Binary division in a CRC generator*

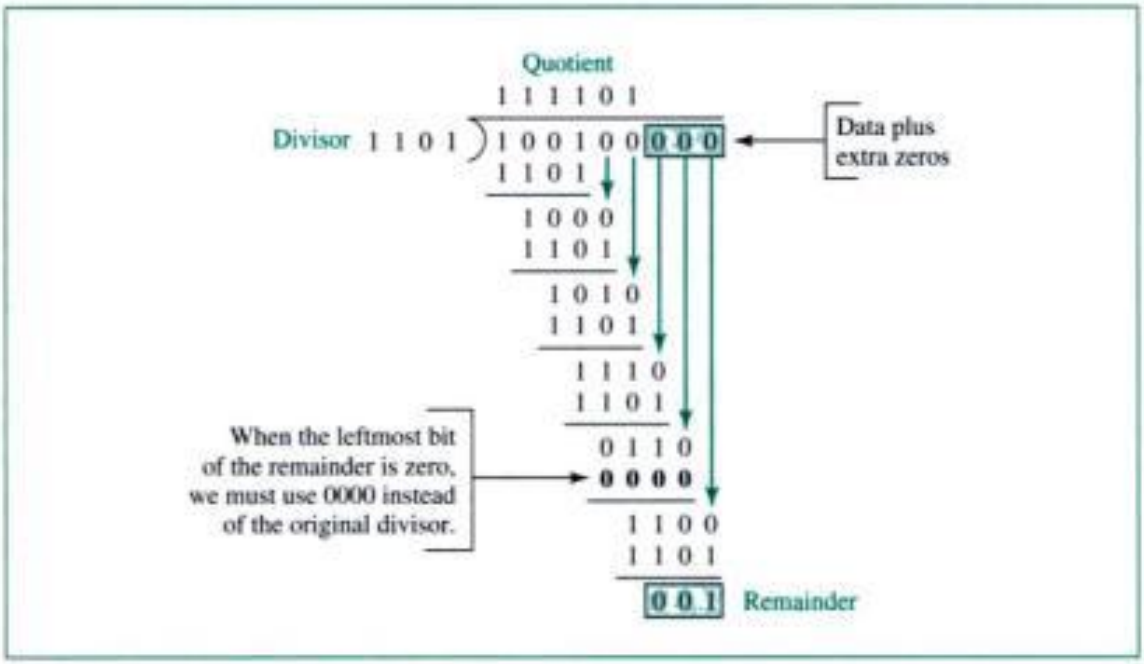

subtraction will be either $0 - 0$ or $1 - 1$, both of which equal 0. So, after subtraction, the leftmost bit of the remainder will always be a leading zero, which is dropped, and the next unused bit of the dividend is pulled down to fill out the remainder. Note that only the first bit of the remainder is dropped—if the second bit is also 0, it is retained, and the dividend/remainder for the next step will begin with 0. This process repeats until the entire dividend has been used.

The CRC Checker

A **CRC checker** functions exactly as the generator does. After receiving the data appended with the CRC, it does the same modulo-2 division. If the remainder is all 0s, the CRC is dropped and the data are accepted; otherwise, the received stream of bits is discarded and data are resent. Figure 10.9 shows the same process of division in the receiver. We assume that there is no error. The remainder is therefore all 0s, and the data are accepted.

Polynomials

The divisor in the CRC generator is most often represented not as a string of 1s and 0s, but as an algebraic **polynomial** (see Fig. 10.10). The polynomial format is useful for two reasons: It is short, and it can be used to prove the concept mathematically (which is beyond the scope of this book).

The relationship of a polynomial to its corresponding binary representation is shown in Figure 10.11.

A polynomial should be selected to have at least the following properties:

- It should not be divisible by x.
- It should be divisible by $x + 1$.

Copyrighted material

Figure 10.9 *Binary division in CRC checker*

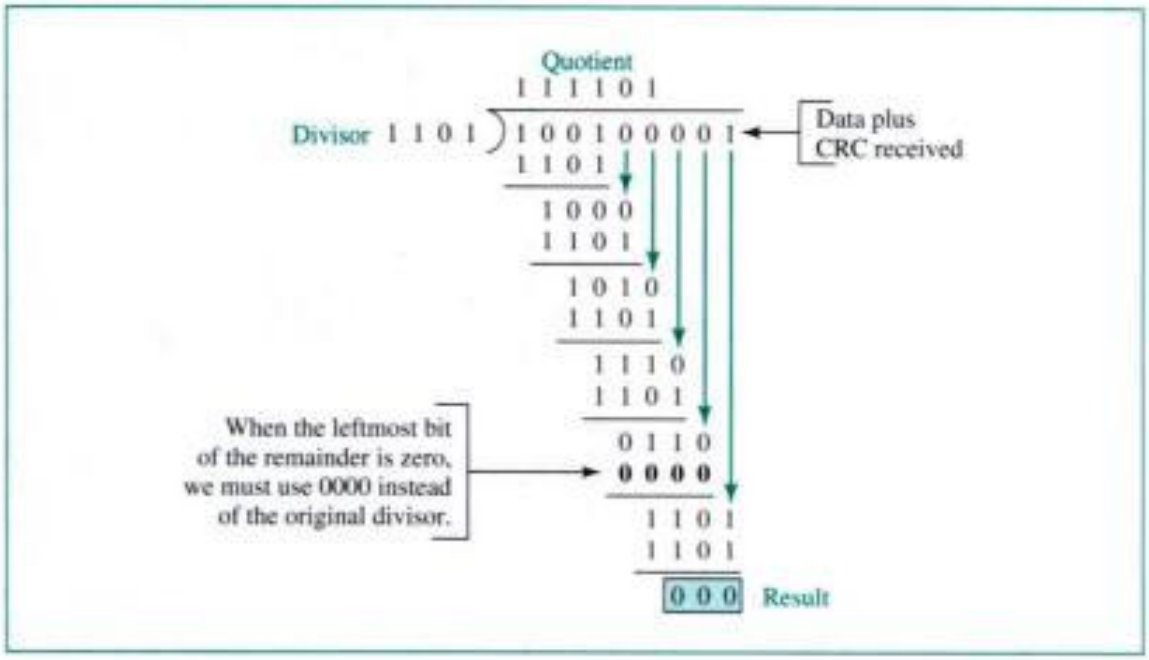

Figure 10.10 *A polynomial*

$$x^7 + x^5 + x^2 + x + 1$$

Figure 10.11 *A polynomial representing a divisor*

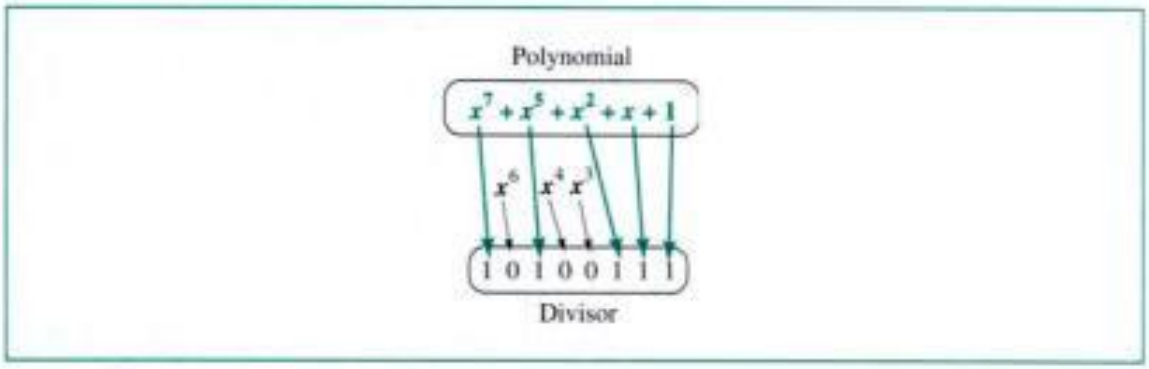

The first condition guarantees that all burst errors of a length equal to the degree of the polynomial are detected. The second condition guarantees that all burst errors affecting an odd number of bits are detected (the proof is beyond the scope of this book).

Example 5

It is obvious that we cannot choose x (binary 10) or $x^2 + x$ (binary 110) as the polynomial because both are divisible by x. However, we can choose $x + 1$ (binary 11) because it is not divisible by x,

Copyrighted material

but is divisible by $x + 1$. We can also choose $x^2 + 1$ (binary 101) because it is divisible by $x + 1$ (binary division).

Standard Polynomials

Some standard polynomials used by popular protocols for CRC generation are shown in Table 10.1.

Table 10.1 *Standard polynomials*

Name	*Polynomial*	*Application*
CRC-8	$x^8 + x^2 + x + 1$	ATM header
CRC-10	$x^{10} + x^9 + x^5 + x^4 + x^2 + 1$	ATM AAL
ITU-16	$x^{16} + x^{12} + x^5 + 1$	HDLC
ITU-32	$x^{32} + x^{26} + x^{23} + x^{22} + x^{16} + x^{12} + x^{11} + x^{10} + x^8 + x^7 + x^5 + x^4 + x^2 + x + 1$	LANs

Performance

CRC is a very effective error detection method. If the divisor is chosen according to the previously mentioned rules,

1. CRC can detect all burst errors that affect an odd number of bits.
2. CRC can detect all burst errors of length less than or equal to the degree of the polynomial.
3. CRC can detect, with a very high probability, burst errors of length greater than the degree of the polynomial.

Example 6

The CRC-12 ($x^{12} + x^{11} + x^3 + x + 1$), which has a degree of 12, will detect all burst errors affecting an odd number of bits, will detect all burst errors with a length less than or equal to 12, and will detect, 99.97 percent of the time, burst errors with a length of 12 or more.

Checksum

The third error detection method we discuss here is called the **checksum.** Like the parity checks and CRC, the checksum is based on the concept of redundancy.

Checksum Generator

In the sender, the checksum generator subdivides the data unit into equal segments of n bits (usually 16). These segments are added using **ones complement** arithmetic (see Appendices B and E) in such a way that the total is also n bits long. That total (sum) is then complemented and appended to the end of the original data unit as redundancy bits, called the checksum field. The extended data unit is transmitted across the network. So if the sum of the data segment is T, the checksum will be $-T$ (see Figs. 10.12 and 10.13).

Copyrighted material

Figure 10.12 *Checksum*

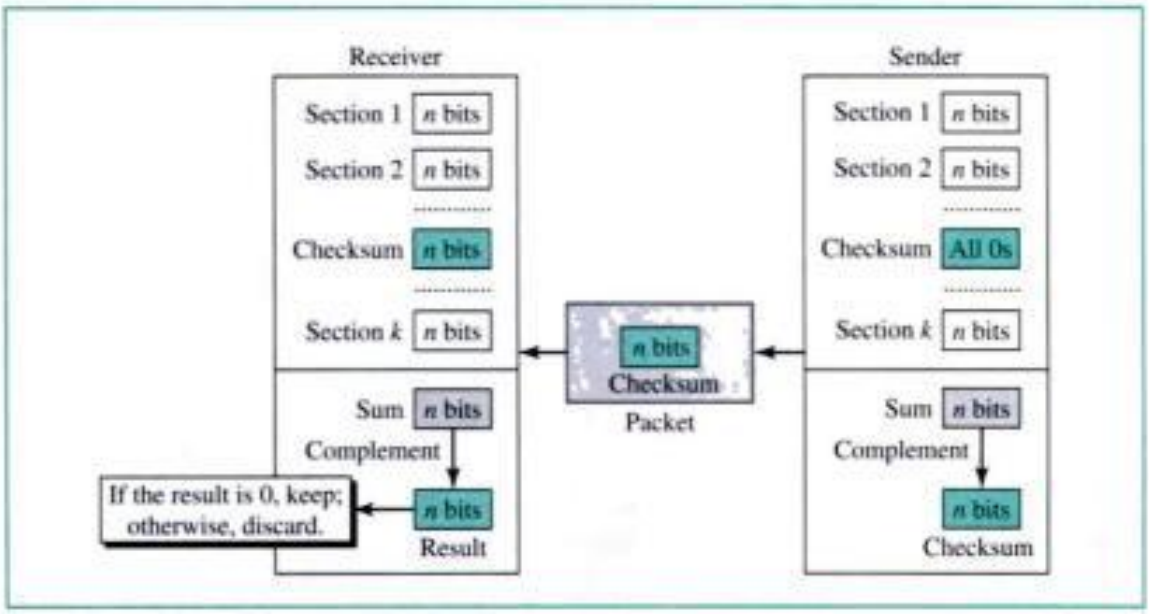

Figure 10.13 *Data unit and checksum*

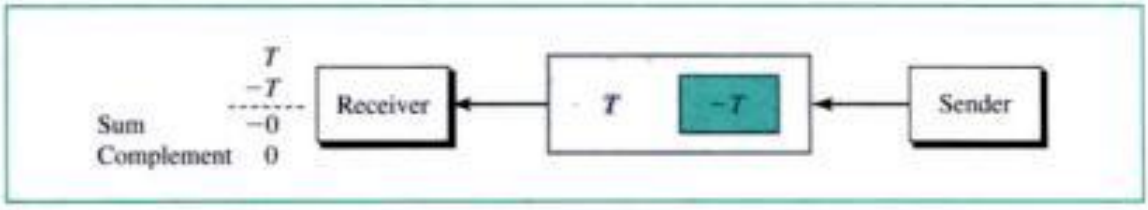

The sender follows these steps:

- The unit is divided into k sections, each of n bits.
- All sections are added using ones complement to get the sum.
- The sum is complemented and becomes the checksum.
- The checksum is sent with the data.

Checksum Checker

The receiver subdivides the data unit as above and adds all segments and complements the result. If the extended data unit is intact, the total value found by adding the data

The receiver follows these steps:

- The unit is divided into k sections, each of n bits.
- All sections are added using ones complement to get the sum.
- The sum is complemented.
- If the result is zero, the data are accepted; otherwise, they are rejected.

Copyrighted material

segments and the checksum field should be zero. If the result is not zero, the packet contains an error and the receiver rejects it (see Appendix E).

Example 7

Suppose the following block of 16 bits is to be sent using a checksum of 8 bits.

```
← 10101001  00111001
```

The numbers are added using ones complement arithmetic (see Appendix E).

	10101001
	00111001
Sum	11100010
Checksum	00011101

The pattern sent is

```
← 10101001  00111001  00011101
                      Checksum
```

Example 8

Now suppose the receiver receives the pattern sent in Example 7 and there is no error.

```
10101001  00111001  00011101
```

When the receiver adds the three sections, it will get all 1s, which, after complementing, is all 0s and shows that there is no error.

	10101001	
	00111001	
	00011101	
Sum	11111111	
Complement	00000000	means that the pattern is OK.

Example 9

Now suppose there is a burst error of length 5 that affects 4 bits.

```
10101111  11111001  00011101
```

When the receiver adds the three sections, it gets

		10101111	
		11111001	
		00011101	
Result	1	11000101	
Carry		1	
Sum		11000110	
Complement		00111001	means that the pattern is corrupted.

Performance

The checksum detects all errors involving an odd number of bits as well as most errors involving an even number of bits. However, if one or more bits of a segment are

Copyrighted material

damaged and the corresponding bit or bits of opposite value in a second segment are also damaged, the sums of those columns will not change and the receiver will not detect a problem. If the last digit of one segment is a 0 and it gets changed to a 1 in transit, then the last 1 in another segment must be changed to a 0 if the error is to go undetected. In two-dimensional parity check, two 0s could both change to 1s without altering the parity because carries were discarded. Checksum retains all carries; so although two 0s becoming 1s would not alter the value of their own column, it would change the value of the next-higher column. But anytime a bit inversion is balanced by an opposite bit inversion in the corresponding digit of another data segment, the error is invisible.

10.3 ERROR CORRECTION

The mechanisms that we have discussed up to this point detect errors but do not correct them. **Error correction** can be handled in several ways. The two most common are error correction by retransmission and forward error correction.

Error Correction by Retransmission

In **error correction by retransmission,** when an error is discovered, the receiver can have the sender retransmit the entire data unit. This type of error correction is discussed along with flow and error control protocols in Chapter 11.

Forward Error Correction

In **forward error correction (FEC),** a receiver can use an error-correcting code, which automatically corrects certain errors. In theory, it is possible to correct any errors automatically. Error-correcting codes, however, are more sophisticated than error detection codes and require more redundancy bits.

The concept underlying error correction can be most easily understood by examining the simplest case: single-bit errors. As we saw earlier, single-bit errors can be detected by the addition of a redundant (parity) bit. A single additional bit can detect single-bit errors in any sequence of bits because it must distinguish between only two conditions: error or no error. A bit has two states (0 and 1). These two states are sufficient for this level of detection.

But what if we want to correct as well as detect single-bit errors? Two states are enough to detect an error but not to correct it. An error occurs when the receiver reads a 1 bit as a 0 or a 0 bit as a 1. To correct the error, the receiver simply reverses the value of the altered bit. To do so, however, it must know which bit is in error. The secret of error correction, therefore, is to locate the invalid bit or bits.

For example, to correct a single-bit error in an ASCII character, the error correction code must determine which of the 7 bits has changed. In this case, we have to distinguish between eight different states: no error, error in position 1, error in position 2,

Copyrighted material

and so on, up to error in position 7. To do so requires enough redundancy bits to show all eight states.

At first glance, it seems that a 3-bit redundancy code should be adequate because 3 bits can show eight different states (000 to 111) and can therefore indicate the locations of eight different possibilities. But what if an error occurs in the redundancy bits themselves? Seven bits of data (the ASCII character) plus 3 bits of redundancy equals 10 bits. Three bits, however, can identify only eight possibilities. Additional bits are necessary to cover all possible error locations.

To calculate the number of redundancy bits r required to correct a given number of data bits m, we must find a relationship between m and r. With m bits of data and r bits of redundancy added to them, the length of the resulting code is $m + r$.

If the total number of bits in a transmittable unit is $m + r$, then r must be able to indicate at least $m + r + 1$ different states. Of these, one state means no error, and $m + r$ states indicate the location of an error in each of the $m + r$ positions.

So $m + r + 1$ states must be discoverable by r bits; and r bits can indicate 2^r different states. Therefore, 2^r must be equal to or greater than $m + r + 1$:

$$2^r >= m + r + 1$$

The value of r can be determined by plugging in the value of m (the original length of the data unit to be transmitted). For example, if the value of m is 7 (as in a 7-bit ASCII code), the smallest r value that can satisfy this equation is 4:

$$2^4 >= 7 + 4 + 1$$

Table 10.2 shows some possible m values and the corresponding r values.

Table 10.2 *Relationship between data and redundancy bits*

Number of Data Bits m	*Number of Redundancy Bits* r	*Total Bits* $m + r$
1	2	3
2	3	5
3	3	6
4	3	7
5	4	9
6	4	10
7	4	11

Hamming Code

Hamming provides a practical solution. The **Hamming code** can be applied to data units of any length and uses the relationship between data and redundancy bits discussed above. For example, a 7-bit ASCII code requires 4 redundancy bits that can be added to the end of the data unit or interspersed with the original data bits. In Figure 10.14, these bits are placed in positions 1, 2, 4, and 8 (the positions in an 11-bit sequence that are powers of 2). For clarity in the examples below, we refer to these bits as r_1, r_2, r_4, and r_8.

Copyrighted material

Figure 10.14 *Positions of redundancy bits in Hamming code*

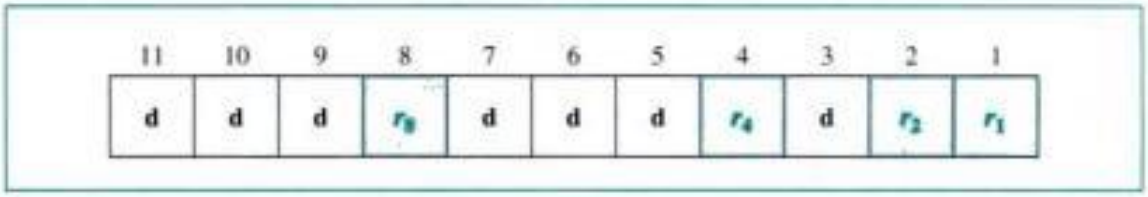

In the Hamming code, each r bit is the parity bit for one combination of data bits, as shown below:

r_1: bits 1, 3, 5, 7, 9, 11
r_2: bits 2, 3, 6, 7, 10, 11
r_4: bits 4, 5, 6, 7
r_8: bits 8, 9, 10, 11

Each data bit may be included in more than one calculation. In the sequences above, for example, each of the original data bits is included in at least two sets, while the r bits are included in only one (see Fig. 10.15).

Figure 10.15 *Redundancy bits calculation*

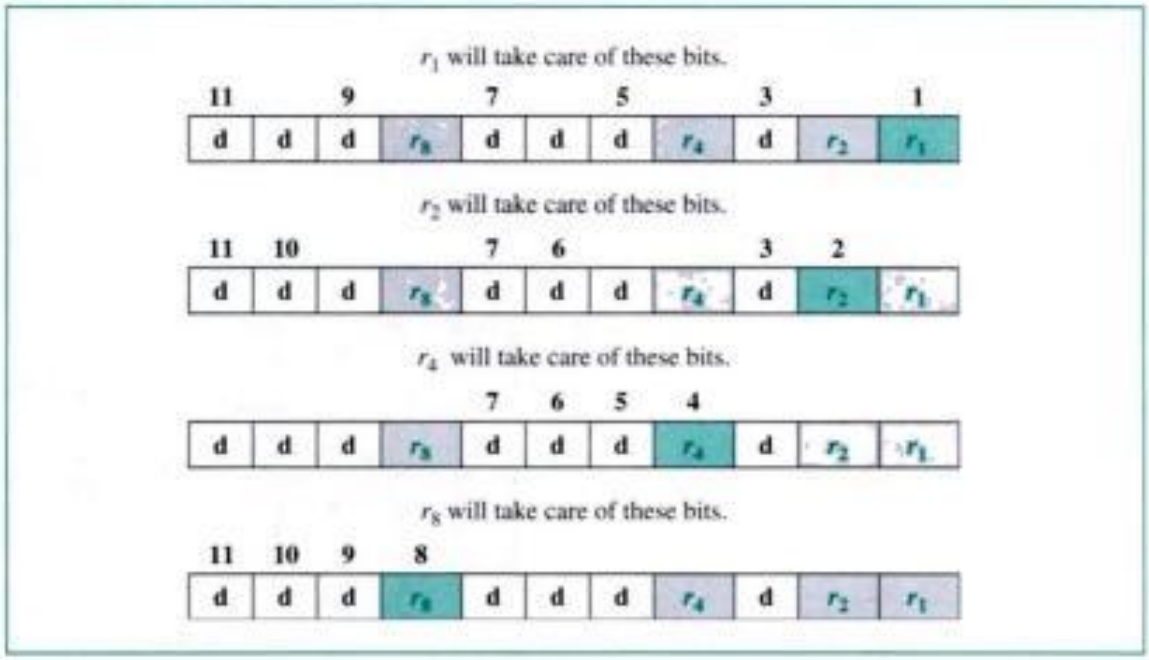

Calculating the *r* Values Figure 10.16 shows a Hamming code implementation for an ASCII character. In the first step, we place each bit of the original character in its appropriate position in the 11-bit unit. In the subsequent steps, we calculate the even parities for the various bit combinations. The parity value for each combination is the value of the corresponding r bit.

Error Detection and Correction Now imagine that by the time the above transmission is received, the number 7 bit has been changed from 1 to 0. The receiver takes the

Copyrighted material

Figure 10.16 *Example of redundancy bit calculation*

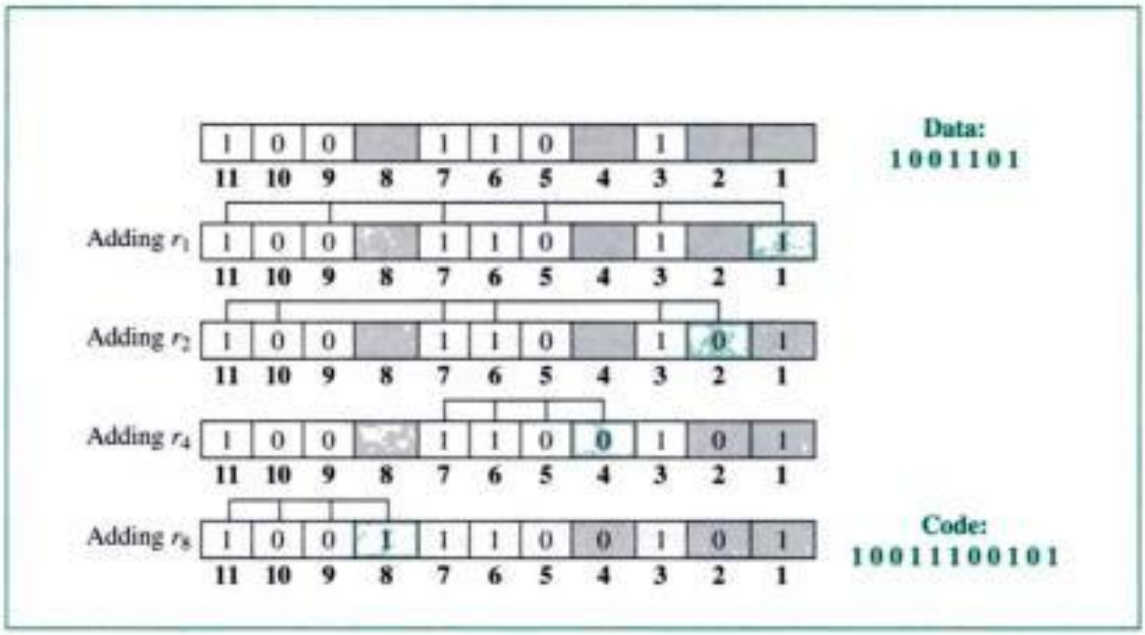

transmission and recalculates 4 new parity bits, using the same sets of bits used by the sender plus the relevant parity r bit for each set (see Fig. 10.17). Then it assembles the new parity values into a binary number in order of r position (r_8, r_4, r_2, r_1). In our example, this step gives us the binary number 0111 (7 in decimal), which is the precise location of the bit in error.

Figure 10.17 *Error detection using Hamming code*

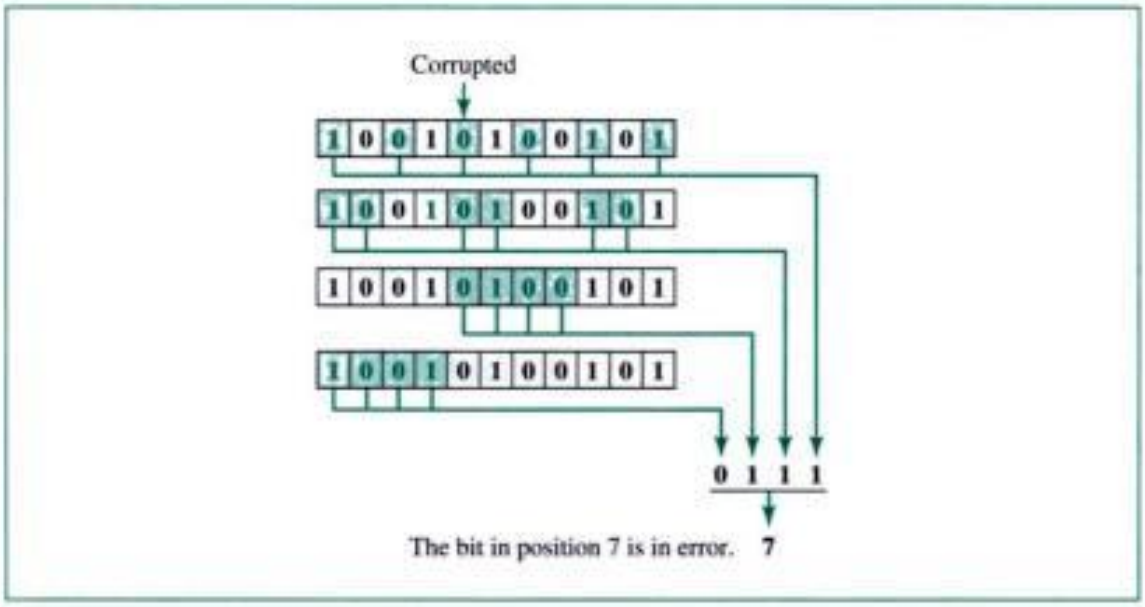

Once the bit is identified, the receiver can reverse its value and correct the error. The beauty of the technique is that it can easily be implemented in hardware and the code is corrected before the receiver knows about it.

Copyrighted material

Burst Error Correction

Although the Hamming code cannot correct a burst error directly, it is possible to rearrange the data and then apply the code. Instead of sending all the bits in a data unit together, we can organize N units in a column and then send the first bit of each, followed by the second bit of each, and so on. In this way, if a burst error of M bits occurs ($M < N$), then the error does not corrupt M bits of one single unit; it corrupts only 1 bit of a unit. With the Hamming scheme, we can then correct the corrupted bit in each unit. Figure 10.18 shows an example.

Figure 10.18 *Burst error correction example*

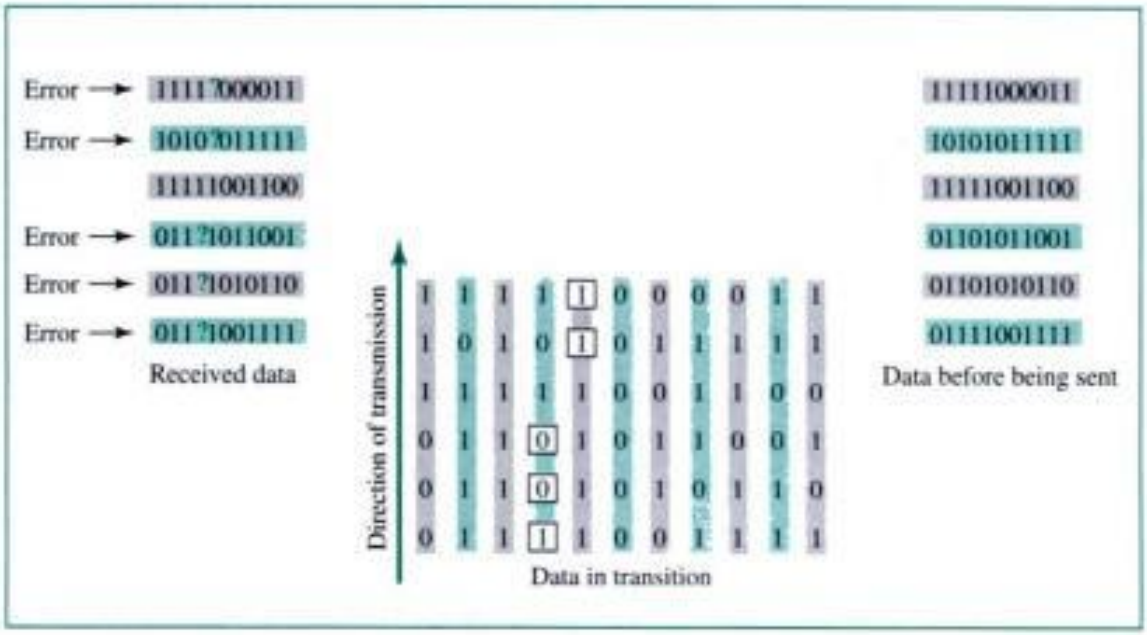

In Figure 10.18 we need to send six data units where each unit is a character with Hamming redundant bits. We organize the bits in columns and rows. We send the first column, then the second column, and so on. The bits that are corrupted by a burst error are shown in squares. Five consecutive bits are corrupted during the actual transmission. However, when these bits arrive at the destination and are reorganized into data units, each corrupted bit belongs to one unit and is automatically corrected. The trick here is to let the burst error corrupt only 1 bit of each unit.

10.4 KEY TERMS

burst error
checksum
CRC checker
CRC generator
cyclic redundancy check (CRC)
error
error correction
error correction by retransmission
error detection
even parity
forward error correction
Hamming code

Copyrighted material

odd parity
one's complement
parity bit
parity check
polynomial
redundancy
single-bit error
two-dimensional parity check

10.5 SUMMARY

- Errors can be categorized as a single-bit error or a burst error. A single-bit error has one bit error per data unit. A burst error has two or more bit errors per data unit.
- Redundancy is the concept of sending extra bits for use in error detection.
- Three common redundancy methods are parity check, cyclic redundancy check (CRC), and checksum.
- An extra bit (parity bit) is added to the data unit in the parity check.
- The parity check can detect only an odd number of errors; it cannot detect an even number of errors.
- In the two-dimensional parity check, a redundant data unit follows n data units.
- CRC, a powerful redundancy checking technique, appends a sequence of redundant bits derived from binary division to the data unit.
- The divisor in the CRC generator is often represented as an algebraic polynomial.
- Errors are corrected through retransmission and by forward error correction.
- The Hamming code is an error correction method using redundant bits. The number of bits is a function of the length of the data bits.
- In the Hamming code, for a data unit of m bits, use the formula $2^r >= m + r + 1$ to determine r, the number of redundant bits needed.
- By rearranging the order of bit transmission of the data units, the Hamming code can correct burst errors.

10.6 PRACTICE SET

Review Questions

1. How does a single-bit error differ from a burst error?
2. Discuss the concept of redundancy in error detection.
3. What are three types of redundancy checks used in data communications?
4. How can the parity bit detect a damaged data unit?
5. What is the difference between even parity and odd parity?
6. Discuss the parity check and the types of errors it can and cannot detect.
7. How is the simple parity check related to the two-dimensional parity check?
8. Discuss the two-dimensional parity check and the types of errors it can and cannot detect.

Copyrighted material

9. What does the CRC generator append to the data unit?
10. What is the relationship between the size of the CRC remainder and the divisor?
11. How does the CRC checker know that the received data unit is undamaged?
12. What are the conditions for the polynomial used by the CRC generator?
13. How is CRC superior to the two-dimensional parity check?
14. What is the error detection method used by upper-layer protocols?
15. What kind of arithmetic is used to add segments in the checksum generator and checksum checker?
16. List the steps involved in creating a checksum.
17. How does the checksum checker know that the received data unit is undamaged?
18. What kind of error is undetectable by the checksum?
19. What is the formula to calculate the number of redundancy bits required to correct a bit error in a given number of data bits?
20. What is the purpose of the Hamming code?
21. How can we use the Hamming code to correct a burst error?

Multiple-Choice Questions

22. Which error detection method consists of a parity bit for each data unit as well as an entire data unit of parity bits?
    a. Simple parity check
    b. Two-dimensional parity check
    c. CRC
    d. Checksum
23. Which error detection method uses ones complement arithmetic?
    a. Simple parity check
    b. Two-dimensional parity check
    c. CRC
    d. Checksum
24. Which error detection method consists of just one redundant bit per data unit?
    a. Simple parity check
    b. Two-dimensional parity check
    c. CRC
    d. Checksum
25. Which error detection method involves polynomials?
    a. Simple parity check
    b. Two-dimensional parity check
    c. CRC
    d. Checksum
26. Which of the following best describes a single-bit error?
    a. A single bit is inverted.
    b. A single bit is inverted per data unit.

Copyrighted material

c. A single bit is inverted per transmission.

d. Any of the above

27. If the ASCII character G is sent and the character D is received, what type of error is this?

a. Single-bit

b. Multiple-bit

c. Burst

d. Recoverable

28. If the ASCII character H is sent and the character I is received, what type of error is this?

a. Single-bit

b. Multiple-bit

c. Burst

d. Recoverable

29. In cyclic redundancy checking, what is the CRC?

a. The divisor

b. The quotient

c. The dividend

d. The remainder

30. In cyclic redundancy checking, the divisor is _____ the CRC.

a. The same size as

b. 1 bit less than

c. 1 bit more than

d. 2 bits more than

31. If the data unit is 111111, the divisor 1010, and the remainder 110, what is the dividend at the receiver?

a. 111111011

b. 111111110

c. 1010110

d. 110111111

32. If the data unit is 111111 and the divisor 1010, what is the dividend at the transmitter?

a. 111111000

b. 1111110000

c. 111111

d. 1111111010

33. If odd parity is used for ASCII error detection, the number of 0s per 8-bit symbol is _____.

a. Even

b. Odd

c. Indeterminate

d. 42

Copyrighted material

34. The sum of the checksum and data at the receiver is _____ if there are no errors.
    a. −0
    b. +0
    c. The complement of the checksum
    d. The complement of the data
35. The Hamming code is a method of _____.
    a. Error detection
    b. Error correction
    c. Error encapsulation
    d. (a) and (b)
36. In CRC there is no error if the remainder at the receiver is _____.
    a. Equal to the remainder at the sender
    b. Zero
    c. Nonzero
    d. The quotient at the sender
37. In CRC the quotient at the sender _____.
    a. Becomes the dividend at the receiver
    b. Becomes the divisor at the receiver
    c. Is discarded
    d. Is the remainder
38. Which error detection method involves the use of parity bits?
    a. Simple parity check
    b. Two-dimensional parity check
    c. CRC
    d. (a) and (b)
39. Which error detection method can detect a single-bit error?
    a. Simple parity check
    b. Two-dimensional parity check
    c. CRC
    d. All the above
40. Which error detection method can detect a burst error?
    a. The parity check
    b. Two-dimensional parity check
    c. CRC
    d. (b) and (c)
41. At the CRC generator, _____ added to the data unit before the division process.
    a. 0s are
    b. 1s are
    c. A polynomial is
    d. A CRC remainder is

Copyrighted material

42. At the CRC generator, _____ added to the data unit after the division process.
    a. 0s are
    b. 1s are
    c. The polynomial is
    d. The CRC remainder is
43. At the CRC checker, _____ means that the data unit is damaged.
    a. A string of 0s
    b. A string of 1s
    c. A string of alternating 1s and 0s
    d. A nonzero remainder

Exercises

44. What is the maximum effect of a 2-ms burst of noise on data transmitted at
    a. 1500 bps?
    b. 12,000 bps?
    c. 96,000 bps?
45. Assuming even parity, find the parity bit for each of the following data units.
    a. 1001011
    b. 0001100
    c. 1000000
    d. 1110111
46. A receiver receives the bit pattern 01101011. If the system is using even parity, is the pattern in error?
47. A system uses two-dimensional parity. Find the parity unit for the following two data units. Assume even parity.

    10011001 01101111
48. Given a 10-bit sequence 1010011110 and a divisor of 1011, find the CRC. Check your answer.
49. Given a remainder of 111, a data unit of 10110011, and a divisor of 1001, is there an error in the data unit?
50. Find the checksum for the following bit sequence. Assume a 16-bit segment size.

    1001001110010011

    1001100001001101
51. Find the complement of 11100100011110011.
52. Add 11100011 and 00011100 in ones complement. Interpret the result.
53. For each data unit of the following sizes, find the minimum number of redundancy bits needed to correct one single-bit error.
    a. 12
    b. 16
    c. 24
    d. 64

Copyrighted material

54. Construct the Hamming code for the bit sequence 10011101.
55. Find the parity bits for the following bit pattern, using simple parity. Do the same for two-dimensional parity. Assume even parity.

    ← 0011101 1100111 1111111 0000000
56. A sender sends 01110001; the receiver receives 01000001. If simple parity is used, can the receiver detect the error?
57. The following block is received by a system using two-dimensional even parity. Which bits are in error?

    ← 10010101 01001111 11010000 11011011
58. A system using two-dimensional even parity sends a block of 8 bytes. How many redundant bits are sent per block? What is the ratio of useful bits to total bits?
59. If a divisor is 101101, how many bits long is the CRC?
60. Find the binary equivalent of $x^8 + x^3 + x + 1$.
61. Find the polynomial equivalent of 100001110001.
62. A receiver receives the code 11001100111. When it uses the Hamming encoding algorithm, the result is 0101. Which bit is in error? What is the correct code?
63. In single-bit error correction, a code of 3 bits can be in one of four states: no error, first bit in error, second bit in error, and third bit in error. How many of these 3 bits should be redundant to correct this code? How many bits can be the actual data?
64. Using the logic in Exercise 63, find out how many redundant bits should be in a 10-bit code to detect an error.
65. The code 11110101101 was received. Using the Hamming encoding algorithm, what is the original code sent?

Copyrighted material

CHAPTER 11

Data Link Control and Protocols

Data communication requires at least two devices working together, one to send and one to receive. Even such a basic arrangement requires a great deal of coordination for an intelligible exchange to occur. The most important responsibilities of the data link layer are **flow control** and **error control.** Collectively, these functions are known as **data link control.**

In this chapter, we first informally define flow and error control. We then introduce three mechanisms that handle flow and error control. We finally discuss a popular data link protocol, HDLC.

11.1 FLOW AND ERROR CONTROL

Flow and error control are the main functions of the data link layer. Let us informally define each.

Flow Control

Flow control coordinates the amount of data that can be sent before receiving acknowledgment and is one of the most important duties of the data link layer. In most protocols, flow control is a set of procedures that tells the sender how much data it can transmit before it must wait for an acknowledgment from the receiver. The flow of data must not be allowed to overwhelm the receiver. Any receiving device has a limited speed at which it can process incoming data and a limited amount of memory in which to store incoming data. The receiving device must be able to inform the sending device before those limits are reached and to request that the transmitting device send fewer frames or stop temporarily. Incoming data must be checked and processed before they can be used. The rate of such processing is often slower than the rate of transmission. For this reason, each receiving device has a block of memory, called a *buffer,* reserved for storing incoming data until they are processed. If the buffer begins to fill up, the receiver must be able to tell the sender to halt transmission until it is once again able to receive.

Copyrighted material

Flow control refers to a set of procedures used to restrict the amount of data that the sender can send before waiting for acknowledgment.

Error Control

Error control is both error detection and error correction. It allows the receiver to inform the sender of any frames lost or damaged in transmission and coordinates the retransmission of those frames by the sender. In the data link layer, the term *error control* refers primarily to methods of error detection and retransmission. Error control in the data link layer is often implemented simply: Anytime an error is detected in an exchange, specified frames are retransmitted. This process is called **automatic repeat request (ARQ).**

Error control in the data link layer is based on automatic repeat request, which is the retransmission of data.

Flow and Error Control Mechanisms

In this section we introduce three common flow and error control mechanisms: Stop-and-Wait ARQ, Go-Back-*N* ARQ, and Selective-Repeat ARQ. Although these are sometimes referred to as protocols, we prefer the term *mechanisms*.

11.2 STOP-AND-WAIT ARQ

Stop-and-Wait ARQ is the simplest flow and error control mechanism. It has the following features:

- The sending device keeps a copy of the last frame transmitted until it receives an acknowledgment for that frame. Keeping a copy allows the sender to retransmit lost or damaged frames until they are received correctly.
- For identification purposes, both data frames and **acknowledgment (ACK)** frames are numbered alternately 0 and 1. A data 0 frame is acknowledged by an ACK 1 frame, indicating that the receiver has received data frame 0 and is now expecting data frame 1. This numbering allows for identification of data frames in case of duplicate transmission (important in the case of lost acknowledgment or delayed acknowledgment, as we will see shortly).
- A damaged or lost frame is treated in the same manner by the receiver. If the receiver detects an error in the received frame, it simply discards the frame and sends no acknowledgment. If the receiver receives a frame that is out of order (0 instead of 1 or 1 instead of 0), it knows that a frame is lost. It discards the out-of-order received frame.
- The sender has a control variable, which we call *S*, that holds the number of the recently sent frame (0 or 1). The receiver has a control variable, which we call *R*, that holds the number of the next frame expected (0 or 1).

Copyrighted material

- The sender starts a timer when it sends a frame. If an acknowledgment is not received within an allotted time period, the sender assumes that the frame was lost or damaged and resends it.
- The receiver sends only positive acknowledgment for frames received safe and sound; it is silent about the frames damaged or lost. The acknowledgment number always defines the number of the next expected frame. If frame 0 is received, ACK 1 is sent; if frame 1 is received, ACK 0 is sent.

Operation

In the transmission of a frame, we can have four situations: normal operation, the frame is lost, the acknowledgment is lost, or the acknowledgment is delayed.

Normal Operation

In a normal transmission, the sender sends frame 0 and waits to receive ACK 1. When ACK 1 is received, it sends frame 1 and then waits to receive ACK 0, and so on. The ACK must be received before the timer set for each frame expires. Figure 11.1 shows successful frame transmissions.

Figure 11.1 *Normal operation*

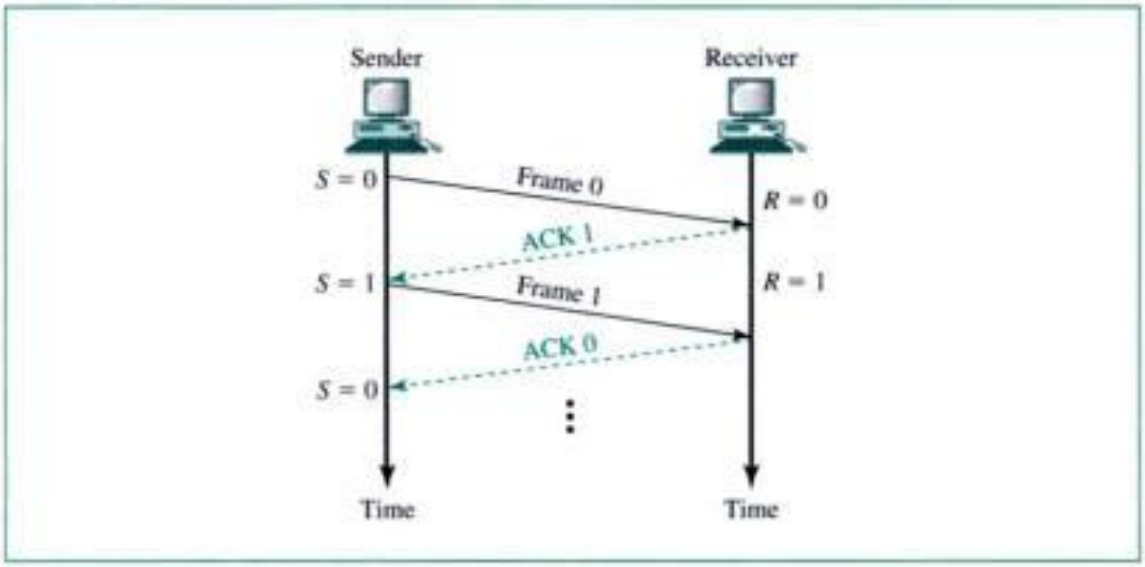

Lost or Damaged Frame

A lost or damaged frame is handled in the same way by the receiver; when the receiver receives a damaged frame, it discards it, which essentially means the frame is lost. The receiver remains silent about a lost frame and keeps its value of R. For example, in Figure 11.2, the sender transmits frame 1, but it is lost. The receiver does nothing, retaining the value of R (1). After the timer at the sender site expires, another copy of frame 1 is sent.

Copyrighted material

Figure 11.2 *Stop-and-Wait ARQ, lost frame*

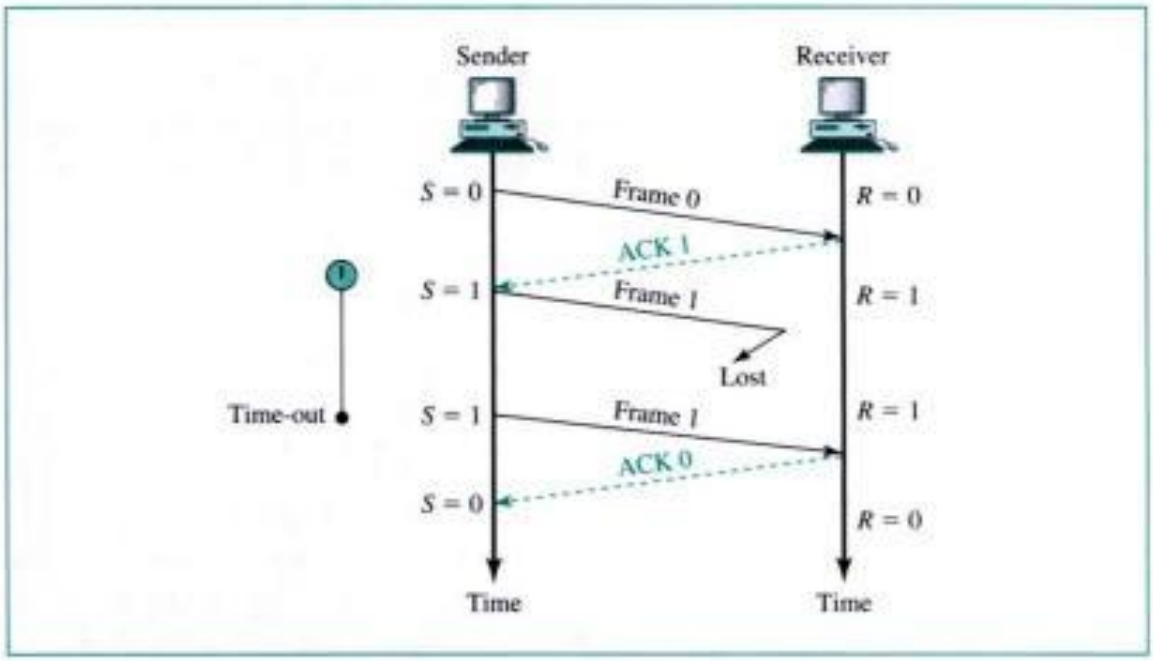

Lost Acknowledgment

A lost or damaged acknowledgment is handled in the same way by the sender; if the sender receives a damaged acknowledgment, it discards it. Figure 11.3 shows a lost ACK 0. The waiting sender does not know if frame 1 has been received. When the timer for frame 1 expires, the sender retransmits frame 1. Note that the receiver has already received frame 1 and is expecting to receive frame 0 ($R = 0$). Therefore, it silently discards the second copy of frame 1.

Figure 11.3 *Stop-and-Wait ARQ, lost ACK frame*

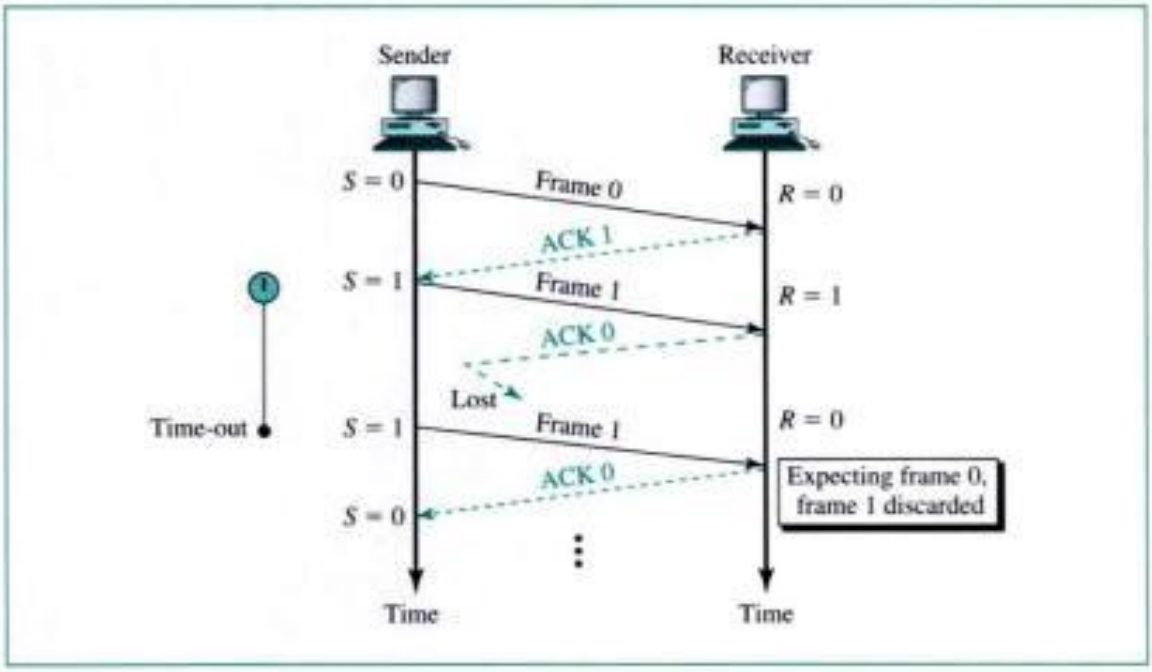

Copyrighted material

The reader may have discovered through this example the need to number frames. If the frames were not numbered, the receiver, thinking that frame 1 is a new frame (not a duplicate), keeps it.

In Stop-and-Wait ARQ, numbering frames prevents the retaining of duplicate frames.

Delayed Acknowledgment

Another problem that may occur is delayed acknowledgment. An acknowledgment can be delayed at the receiver or by some problem with the link. Figure 11.4 shows the delay of ACK 1; it is received after the timer for frame 0 has already expired. The sender has already retransmitted a copy of frame 0. However, the value of R at the receiver site is still 1, which means that the receiver expects to see frame 1. The receiver, therefore, discards the duplicate frame 0.

Figure 11.4 *Stop-and-Wait ARQ, delayed ACK*

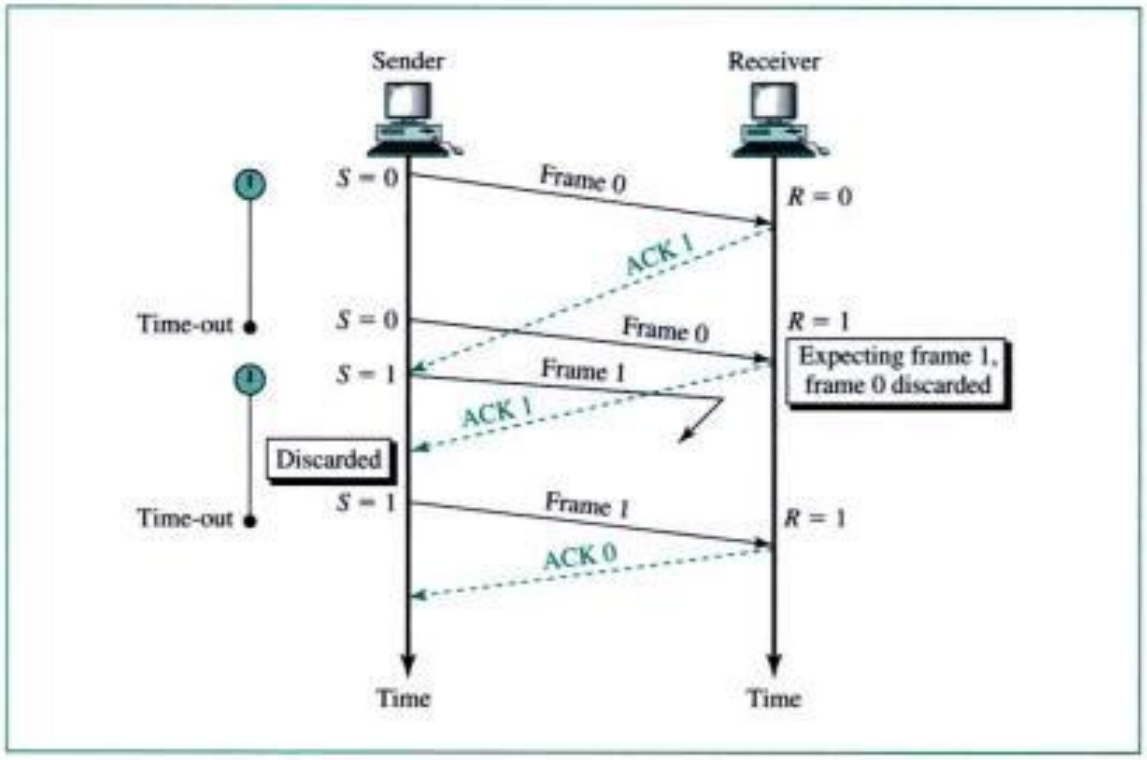

The sender has now received two ACKs, one that was delayed and one that was sent after the duplicate frame 0 arrived. The second ACK 1 is discarded.

To understand why we need to number the acknowledgments, let us examine Figure 11.4 again. After the delayed ACK 1 reaches the sender, frame 1 is sent. However, frame 1 is lost and never reaches the receiver. The sender then receives an ACK 1 for the duplicate frame sent. If the ACKs were not numbered, the sender would interpret the second ACK as the acknowledgment for frame 1. Numbering the ACKs provides a method to keep track of the received data frames.

Copyrighted material

Numbered acknowledgments are needed if an acknowledgment is delayed and the next frame is lost.

Bidirectional Transmission

The stop-and-wait mechanism we have discussed is unidirectional. However, we can have bidirectional transmission if the two parties have two separate channels for full-duplex transmission or share the same channel for half-duplex transmission. In this case, each party needs both *S* and *R* variables to track frames sent and expected.

Piggybacking

Piggybacking is a method to combine a data frame with an acknowledgment. For example, in Figure 11.5, Stations A and B both have data to send. Instead of sending separate data and ACK frames, station A sends a data frame that includes an ACK. Station B behaves in a similar manner.

Figure 11.5 *Piggybacking*

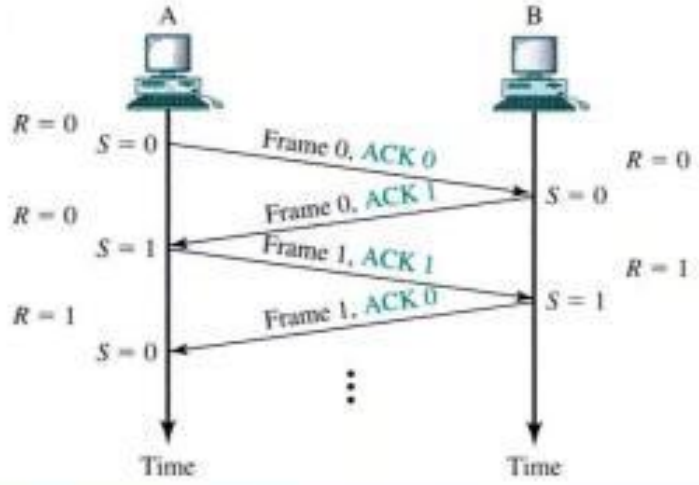

Piggybacking can save bandwidth because the overhead from a data frame and an ACK frame (addressees, CRC, etc.,) can be combined into just one frame.

11.3 GO-BACK-*N* ARQ

In Stop-and-Wait ARQ, at any point in time for a sender, there is only one frame, the outstanding frame, that is sent and waiting to be acknowledged. This is not a good use of the transmission medium. To improve the efficiency, multiple frames should be in transition while waiting for acknowledgment. In other words, we need to let more than

Copyrighted material

one frame be outstanding. Two protocols use this concept: **Go-Back-*N* ARQ** and **Selective Repeat ARQ.** We discuss the first in this section and the second in Section 11.4.

In Go-Back-*N* ARQ, we can send up to *W* frames before worrying about acknowledgments; we keep a copy of these frames until the acknowledgments arrive. This procedure requires additional features to be added to Stop-and-Wait ARQ.

Sequence Numbers

Frames from a sending station are numbered sequentially. However, because we need to include the sequence number of each frame in the header, we need to set a limit. If the header of the frame allows m bits for the sequence number, the sequence numbers range from 0 to $2^m - 1$. For example, if m is 3, the only sequence numbers are 0 through 7 inclusive. However, we can repeat the sequence. So the sequence numbers are

$$0, 1, 2, 3, 4, 5, 6, 7, 0, 1, 2, 3, 4, 5, 6, 7, 0, 1, \ldots$$

Sender Sliding Window

At the sender site, to hold the outstanding frames until they are acknowledged, we use the concept of a window. We imagine that all frames are stored in a buffer. The outstanding frames are enclosed in a window. The frames to the left of the window are those that have already been acknowledged and can be purged; those to the right of the window cannot be sent until the window slides over them. The size of the window is at most $2^m - 1$ for reasons that we discuss later.

The size of the window in this protocol is fixed, although we can have a variable-size window in other protocols such as TCP (see Chapter 22). The window slides to include new unsent frames when the correct acknowledgments are received. The window is a **sliding window.** For example, in Figure 11.6*a*, frames 0 through 6 have been sent. In part *b*, the window slides two frames over because an acknowledgment was received for frames 0 and 1.

Figure 11.6 *Sender sliding window*

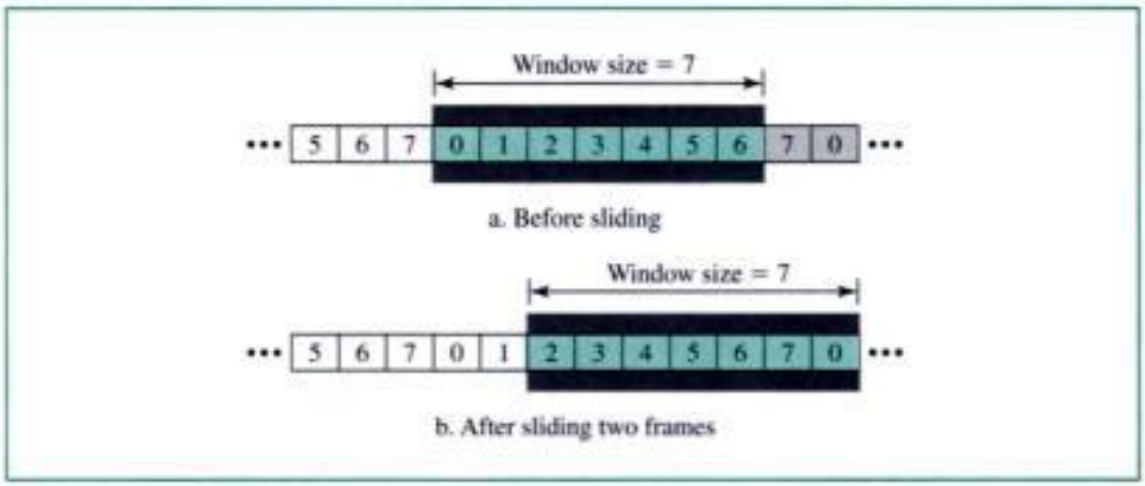

Copyrighted material

Receiver Sliding Window

The size of the window at the receiver site in this protocol is always 1. The receiver is always looking for a specific frame to arrive in a specific order. Any frame arriving out of order is discarded and needs to be resent. The receiver window also slides as shown in Figure 11.7. In part *a* the receiver is waiting for frame 0. When that arrives, the window slides over.

Figure 11.7 *Receiver sliding window*

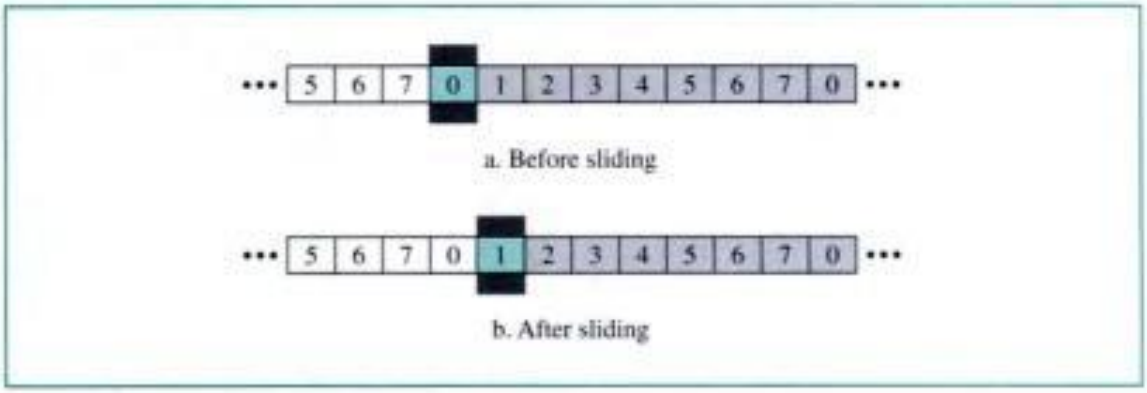

Control Variables

The sender has three variables, S, S_F, and S_L. The S variable holds the sequence number of the recently sent frame; S_F holds the sequence number of the first frame in the window; and S_L holds the sequence number of the last frame in the window. The size of the window is W, where $W = S_L - S_F + 1$.

The receiver only has one variable, R, that holds the sequence number of the frame it expects to receive. If the sequence number of the received frame is the same as the value of R, the frame is accepted; if not, it is rejected. Figure 11.8 shows the sender and receiver window with their control variables.

Figure 11.8 *Control variables*

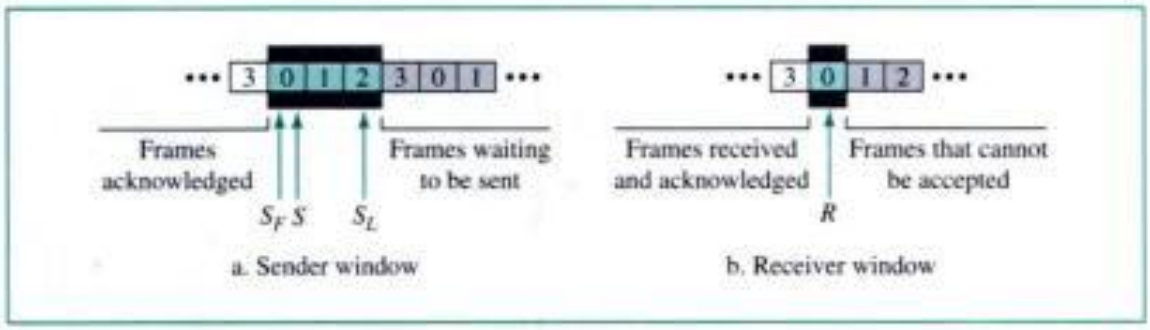

Timers

The sender sets a timer for each frame sent. The receiver has no timers.

Copyrighted material

Acknowledgment

The receiver sends positive acknowledgments if a frame has arrived safe and sound and in order. If a frame is damaged or is received out of order, the receiver is silent and will discard all subsequent frames until it receives the one it is expecting. The silence of the receiver causes the timer of the unacknowledged frame to expire. This, in turn, causes the sender to go back and resend all frames, beginning with the one with the expired timer. The receiver does not have to acknowledge each frame received. It can send one cumulative acknowledgment for several frames.

Resending Frame

When a frame is damaged, the sender goes back and sends a set of frames starting from the damaged one up to the last one sent. For example, suppose the sender has already sent frame 6, but the timer for frame 3 expires. This means that frame 3 has not been acknowledged, so the sender goes back and sends frames 3, 4, 5, 6 again. That is why the protocol is called Go-Back-*N* ARQ.

Operation

Let us see what happens in various situations.

Normal Operation

Figure 11.9 shows a normal operation of this mechanism. The sender keeps track of the outstanding frames and updates the variables and windows as the acknowledgments arrive.

Figure 11.9 *Go-Back-N ARQ, normal operation*

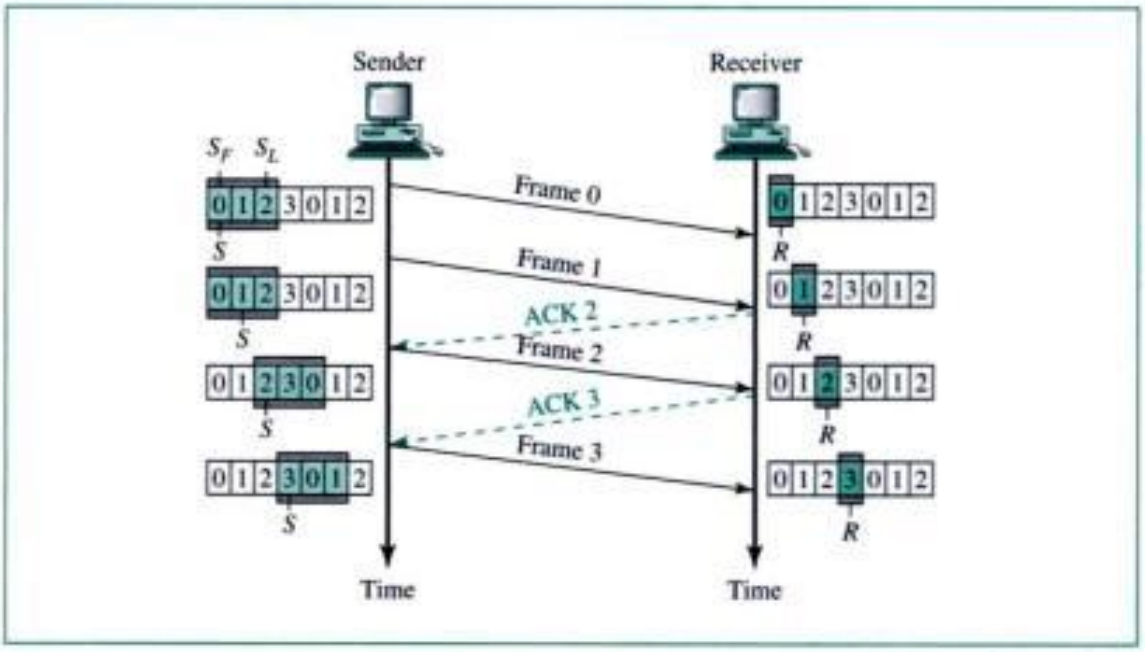

Copyrighted material

Damaged or Lost Frame

Now let us see what happens if a frame is lost. Figure 11.10 shows that frame 2 is lost. Note that when the receiver receives frame 3, it is discarded because the receiver is expecting frame 2, not frame 3 (according to its window). After the timer for frame 2 expires at the sender site, the sender sends frames 2 and 3 (it goes back to 2).

Figure 11.10 *Go-Back-N ARQ, lost frame*

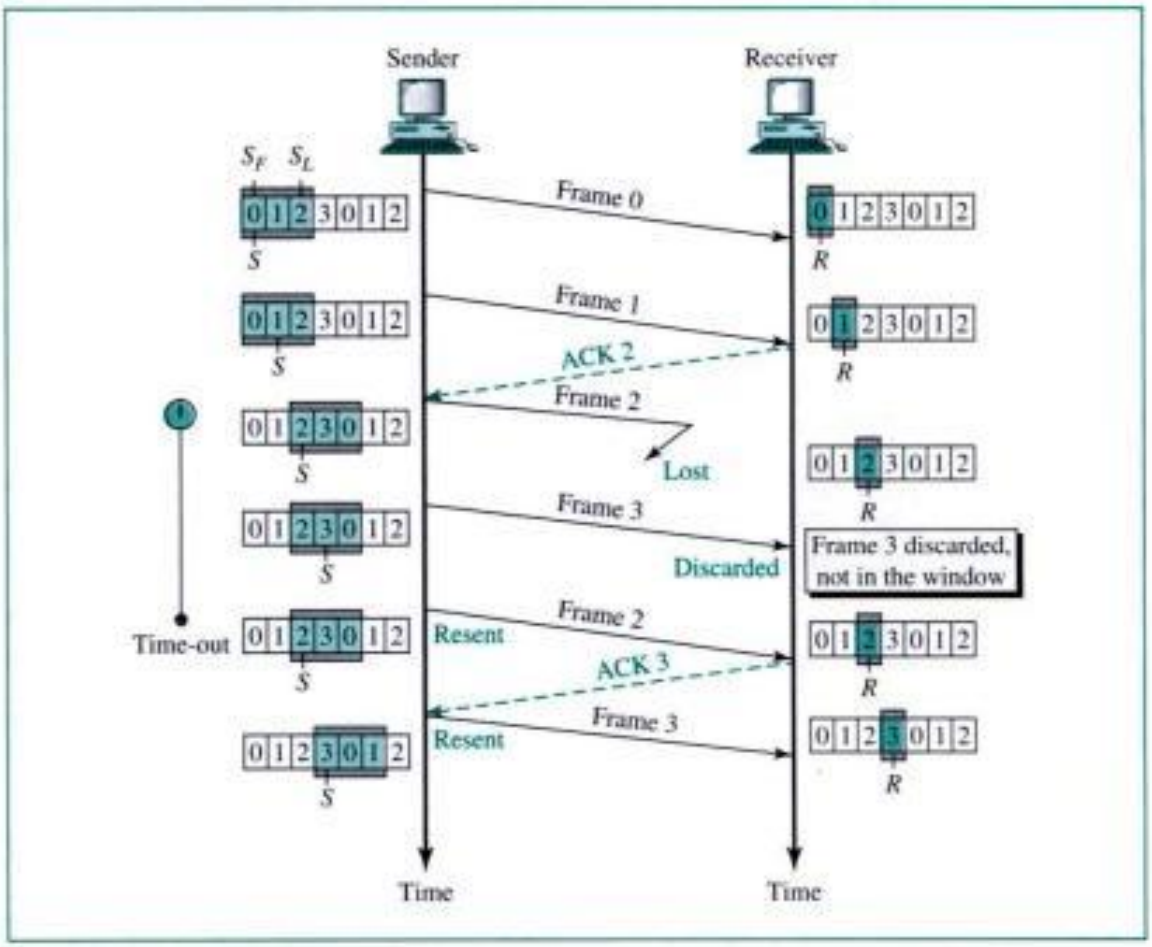

Damaged or Lost Acknowledgment

If an acknowledgment is damaged or lost, we can have two situations. If the next acknowledgment arrives before the expiration of any timer, there is no need for retransmission of frames because acknowledgments are cumulative in this protocol. ACK 4 means ACK 1 to ACK 4. So if ACK 1, ACK 2, and ACK 3 are lost, ACK 4 covers them. However, if the next ACK arrives after the time-out, the frame and all the frames after that are resent. Note that the receiver never resends an ACK. We leave the figure and details as an exercise.

Delayed Acknowledgment

A delayed acknowledgment also triggers the resending of frames. Again, we leave the figure and details as an exercise.

Copyrighted material

Sender Window Size

We can now show why the size of the sender window must be less than 2^m. As an example, we choose $m = 2$, which means the size of the window can be $2^m - 1$, or 3. Figure 11.11 compares a window size of 3 and 4.

Figure 11.11 *Go-Back-N ARQ: sender window size*

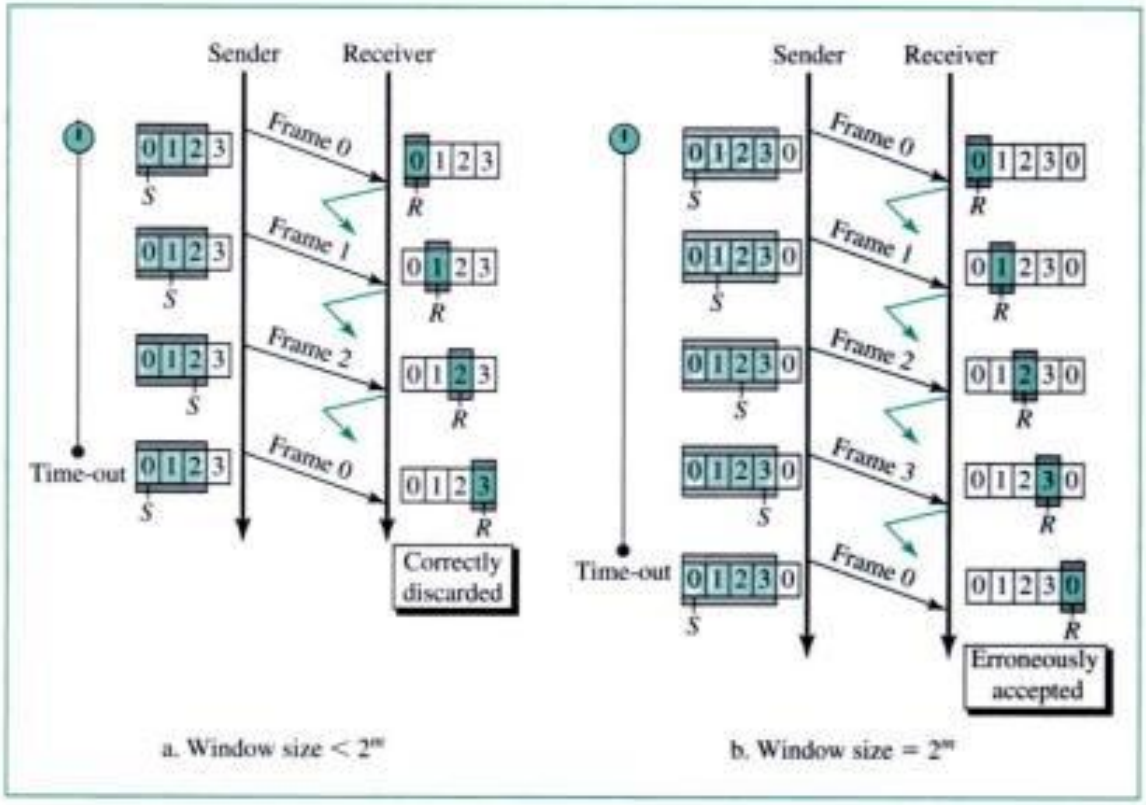

If the size of the window is 3 (less than 2^2) and all three acknowledgments are lost, the frame 0 timer expires and all three frames are resent. However, the window of the receiver is now expecting frame 3, not frame 0, so the duplicate frame is correctly discarded. On the other hand, if the size of the window is 4 (equal to 2^2) and all acknowledgments are lost, the sender will send the duplicate of frame 0. However, this time the window of the receiver expects to receive frame 0, so it accepts frame 0, not as a duplicate, but as the first frame in the next cycle. This is an error.

> **In Go-Back-N ARQ, the size of the sender window must be less than 2^m; the size of the receiver window is always 1.**

Bidirectional Transmission and Piggybacking

As in the case of Stop-and-Wait ARQ, Go-Back-*N* ARQ can also be bidirectional. We can also use piggybacking to improve the efficiency of the transmission. However, note that each direction needs both a sender window and a receiver window. We leave the configuration of the windows as an exercise.

Copyrighted material

11.4 SELECTIVE REPEAT ARQ

Go-Back-*N* ARQ simplifies the process at the receiver site. The receiver keeps track of only one variable, and there is no need to buffer out-of-order frames; they are simply discarded. However, this protocol is very inefficient for a noisy link. In a noisy link a frame has a higher probability of damage, which means the resending of multiple frames. This resending uses up the bandwidth and slows down the transmission. For noisy links, there is another mechanism that does not resend *N* frames when just one frame is damaged; only the damaged frame is resent. This mechanism is called Selective Repeat ARQ. It is more efficient for noisy links, but the processing at the receiver is more complex.

Sender and Receiver Windows

The configuration of the sender and its control variables for Selective Repeat ARQ are the same as those for Go-Back-*N* ARQ. However, for reasons to be discussed later, the size of the window should be at most one-half of the value 2^m. The receiver window size must also be this size. This window, however, specifies the range of the accepted received frame. In other words, in Go-Back-*N*, the receiver is looking for one specific sequence number; in Selective Repeat, the receiver is looking for a range of sequence numbers. The receiver has two control variables R_F and R_L to define the boundaries of the window. Figure 11.12 shows the sender and receiver windows.

Figure 11.12 *Selective Repeat ARQ, sender and receiver windows*

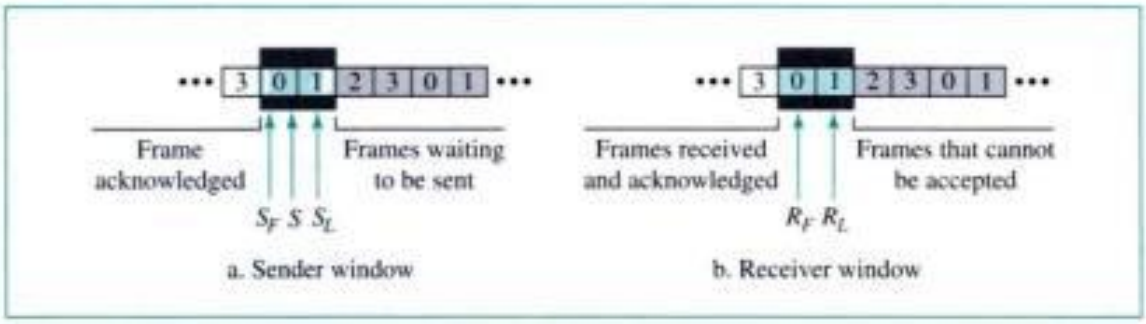

Selective Repeat ARQ also defines a **negative acknowledgment (NAK)** that reports the sequence number of a damaged frame before the timer expires.

Operation

Let us show the operation of the mechanism with an example of a lost frame, as shown in Figure 11.13.

Frames 0 and 1 are accepted when received because they are in the range specified by the receiver window. When frame 3 is received, it is also accepted for the same reason. However, the receiver sends a NAK 2 to show that frame 2 has not been received. When the sender receives the NAK 2, it resends only frame 2, which is then accepted because it is in the range of the window.

Copyrighted material

Figure 11.13 *Selective Repeat ARQ, lost frame*

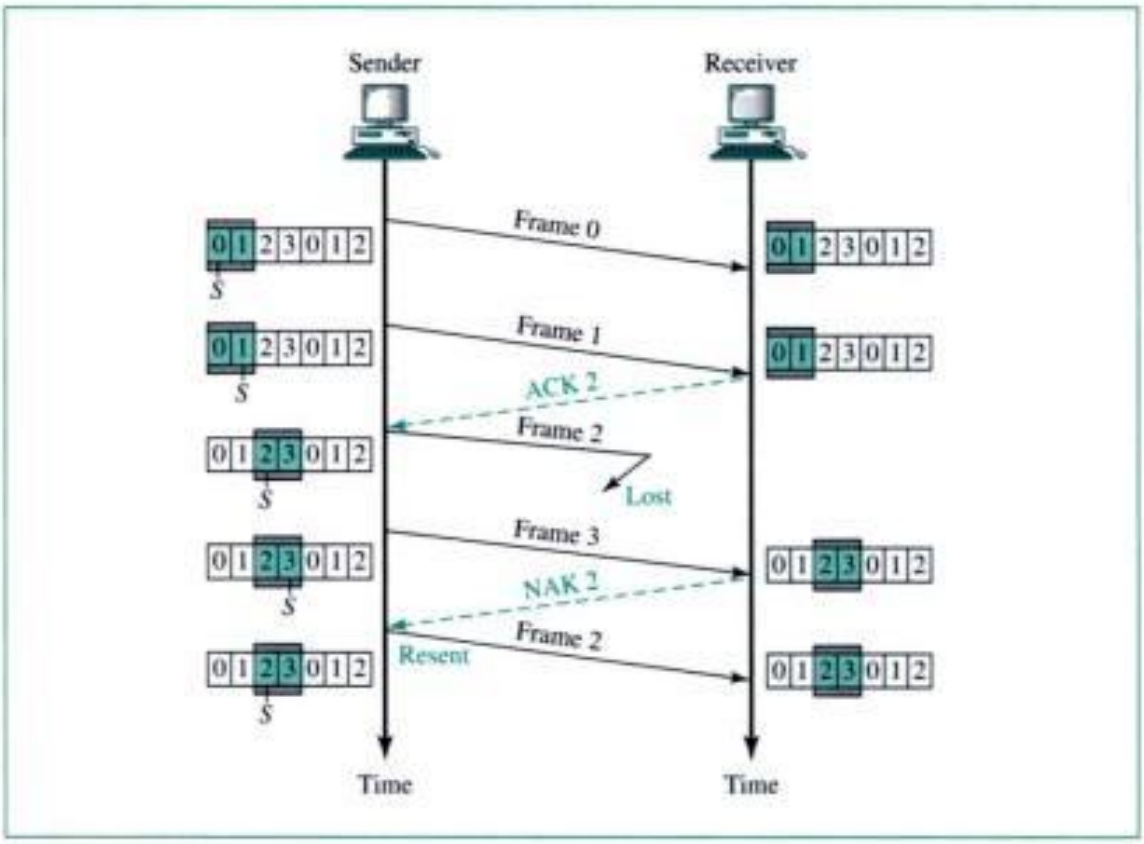

Lost and Delayed ACKs and NAKs

We leave lost and delayed ACKs and NAKs as exercises. Note that the sender also sets a timer for each frame sent.

Sender Window Size

We can now show why the size of the sender and receiver windows must be at most one-half of 2^m. For an example, we choose $m = 2$, which means the size of the window should be $2^m/2$, or 2. Figure 11.14 compares a window size of 2 with a window size of 3.

If the size of the window is 2 and all acknowledgments are lost, the timer for frame 0 expires and frame 0 is resent. However, the window of the receiver is now expecting frame 2, not frame 0, so this duplicate frame is correctly discarded. When the size of the window is 3 and all acknowledgments are lost, the sender sends a duplicate of frame 0. However, this time, the window of the receiver expects to receive frame 0 (0 is part of the window), so it accepts frame 0, not as a duplicate, but as the first frame in the next cycle. This is clearly an error.

In Selective Repeat ARQ, the size of the sender and receiver window must be at most one-half of 2^m.

Copyrighted material

Figure 11.14 *Selective Repeat ARQ, sender window size*

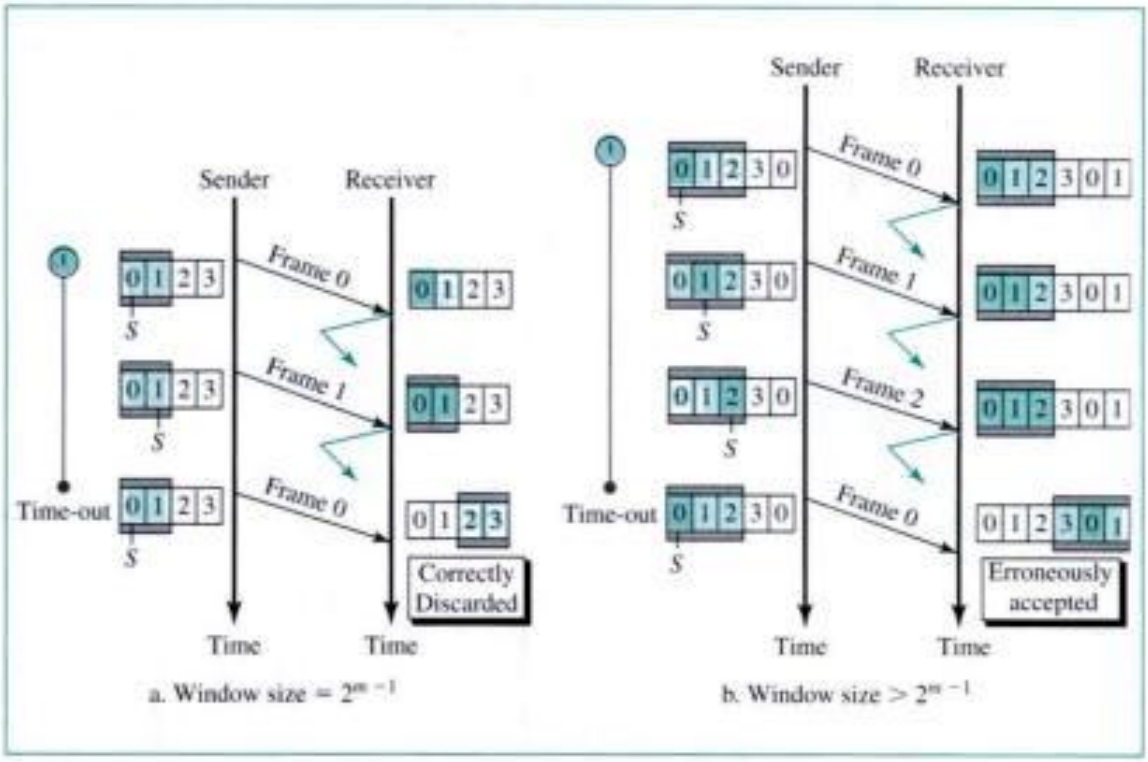

Bidirectional Transmission and Piggybacking

As in the case of Stop-and-Wait ARQ and the Go-Back-*N* ARQ, Selective Repeat ARQ can also be bidirectional. We can use piggybacking to improve the efficiency of the transmission. However, note that each direction needs both a sender window and a receiver window. We leave the configuration of the windows as an exercise.

Bandwidth-Delay Product

A measure of the efficiency of an ARQ system is the product of the bandwidth (in bits per second) and the round-trip delay (in seconds). If the link has an adequate bandwidth, the sender will exhaust its window quickly and will wait for the acknowledgments to come. If the delay is long, the sender can also exhaust its window while waiting. So the product of these two factors can be used to define the efficiency of an ARQ system. The **bandwidth-delay product** is a measure of the number of bits we can send out of our system while waiting for news from the receiver.

Example 1

In a Stop-and-Wait ARQ system, the bandwidth of the line is 1 Mbps, and 1 bit takes 20 ms to make a round trip. What is the bandwidth-delay product? If the system data frames are 1000 bits in length, what is the utilization percentage of the link?

Solution

The bandwidth-delay product is

$$1 \times 10^6 \times 20 \times 10^{-3} = 20{,}000 \text{ bits}$$

Copyrighted material

The system can send 20,000 bits during the time it takes for the data to go from the sender to the receiver and then back again. However, the system sends only 1000 bits. We can say that the link utilization is only 1000/20,000, or 5%. For this reason, for a link with high bandwidth or long delay, use of Stop-and-Wait ARQ wastes the capacity of the link.

Example 2

What is the utilization percentage of the link in Example 1 if the link uses Go-Back-*N* ARQ with a 15-frame sequence?

Solution

The bandwidth-delay product is still 20,000. The system can send up to 15 frames or 15,000 bits during a round trip. This means the utilization is 15,000/20,000, or 75 percent. Of course, if there are damaged frames, the utilization percentage is much less because frames have to be resent.

Pipelining

In networking and in other areas, a task is often begun before the previous task has ended. This is known as **pipelining.** There is no pipelining in Stop-and-Wait ARQ because we need to wait for a frame to reach the destination and be acknowledged before the next frame can be sent. However, pipelining does apply to Go-Back-*N* ARQ and Selective Repeat ARQ because several frames can be sent before we receive news about the previous frames.

Pipelining improves the efficiency of the transmission if the number of bits in transition is large with respect to the bandwidth-delay product.

11.5 HDLC

High-level Data Link Control (HDLC) is an actual protocol designed to support both half-duplex and full-duplex communication over point-to-point and multipoint links. It implements the ARQ mechanisms we discussed in this chapter.

Configurations and Transfer Modes

HDLC provides two common modes of transmission: NRM and ABM.

NRM

In **normal response mode (NRM),** the station configuration is unbalanced. We have one primary station and multiple secondary stations. A **primary station** can send commands; a **secondary station** can only respond. The NRM is used for both point-to-point and multiple-point links. See Figure 11.15.

ABM

In **asynchronous balanced mode (ABM),** the configuration is balanced. The link is point-to-point, and each station can function as a primary and a secondary, as shown in Figure 11.16.

Copyrighted material

Figure 11.15 *NRM*

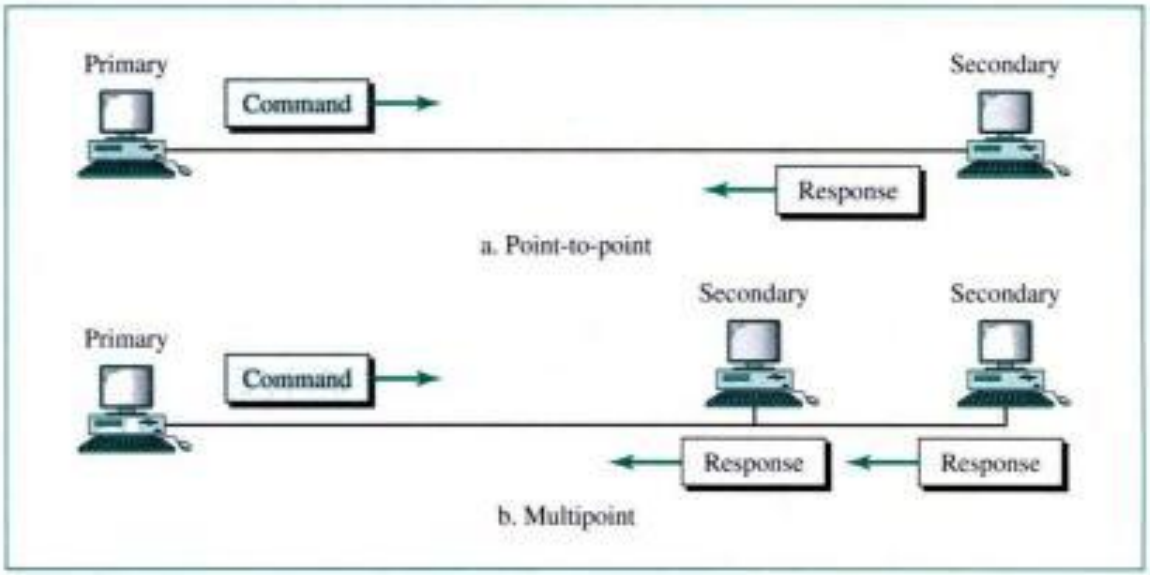

Figure 11.16 *ABM*

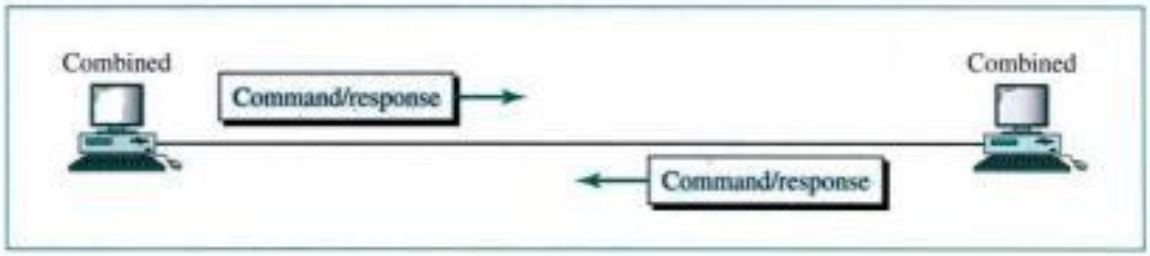

Frames

To provide the flexibility necessary to support all the options possible in the modes and configurations described above, HDLC defines three types of frames: **information frames (I-frames), supervisory frames (S-frames),** and **unnumbered frames (U-frames).** Each type of frame works as an envelope for the transmission of a different type of message. I-frames are used to transport user data and control information relating to user data (piggybacking). S-frames are used only to transport control information. U-frames are reserved for system management. Information carried by U-frames is intended for managing the link itself.

Frame Format

Each frame in HDLC may contain up to six fields, as shown in Figure 11.17: a beginning flag field, an address field, a control field, an information field, a frame check sequence (FCS) field, and an ending flag field. In multiple-frame transmissions, the ending flag of one frame can serve as the beginning flag of the next frame.

Flag Field

The **flag field** of an HDLC frame is an 8-bit sequence with a bit pattern 01111110 that identifies both the beginning and end of a frame and serves as a synchronization

Copyrighted material

Figure 11.17 *HDLC frame*

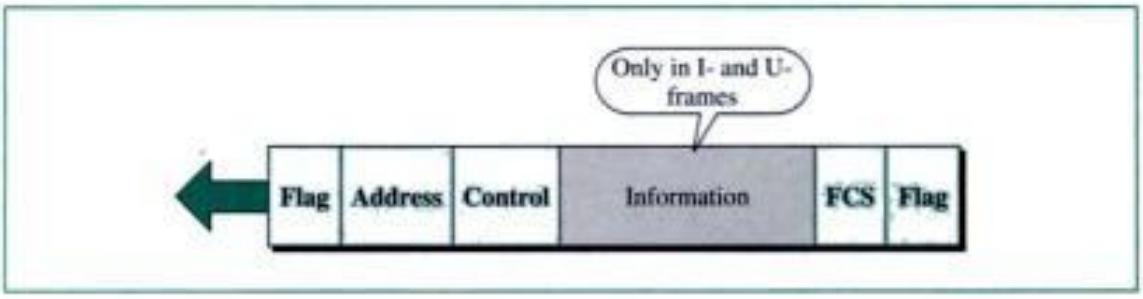

pattern for the receiver. The flag field is discussed further in the section on data transparency.

Address Field

The second field of an HDLC frame contains the address of the secondary station that is either the originator or the destination of the frame (or the station acting as secondary in the case of combined stations). If a primary station creates a frame, it contains a *to* address. If a secondary creates the frame, it contains a *from* address. An **address field** can be 1 byte or several bytes long, depending on the needs of the network. One byte can identify up to 128 stations (because 1 bit is used for another purpose). Larger networks require multiple-byte address fields.

If the address field is only 1 byte, the last bit is always a 1. If the address is more than 1 byte, all bytes but the last one will end with 0; only the last will end with 1. Ending each intermediate byte with 0 indicates to the receiver that there are more address bytes to come. The networks that do not use primary/secondary configuration, such as Ethernet (see Chapter 14), use two address fields: the sender address and the receiver address.

Control Field

The **control field** is a 1- or 2-byte segment of the frame used for flow and error control. The interpretation of bits in this field is different for different frame types. We discuss this field when we discuss the frame types.

Information Field

The **information field** contains the user's data from the network layer or network management information. Its length can vary from one network to another but is always fixed within each network.

FCS Field

The **frame check sequence (FCS)** is HDLC's error detection field. It can contain either a 2- or 4-byte ITU-T CRC.

Frame Type

HDLC defines three types of frames: the I-frame, S-frame, and U-frame, as shown in Figure 11.18.

Copyrighted material

Figure 11.18 *HDLC frame types*

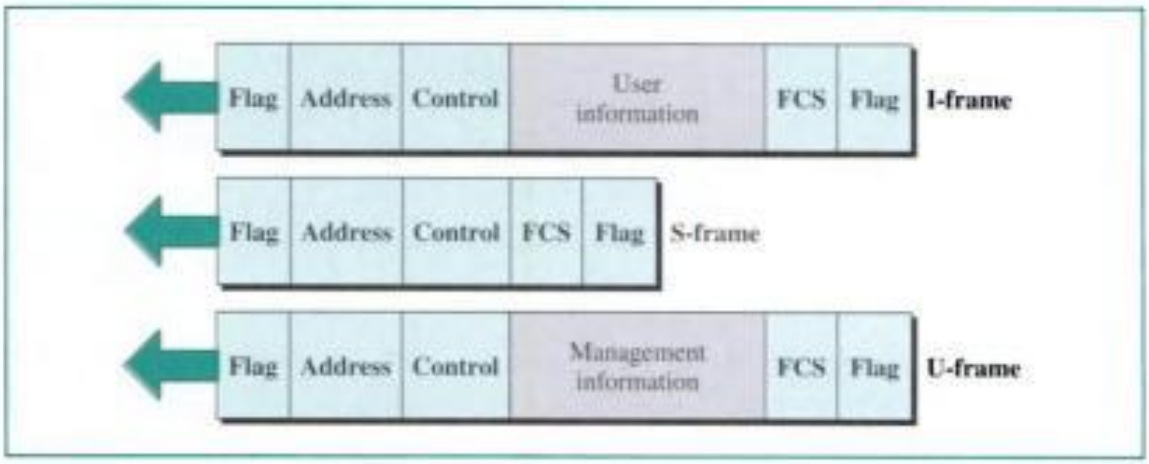

I-Frame

I-frames are designed to carry user data from the network layer. In addition, they can include flow and error control information (piggybacking). Figure 11.19 shows the format of the control field for an I-frame.

Figure 11.19 *I-frame*

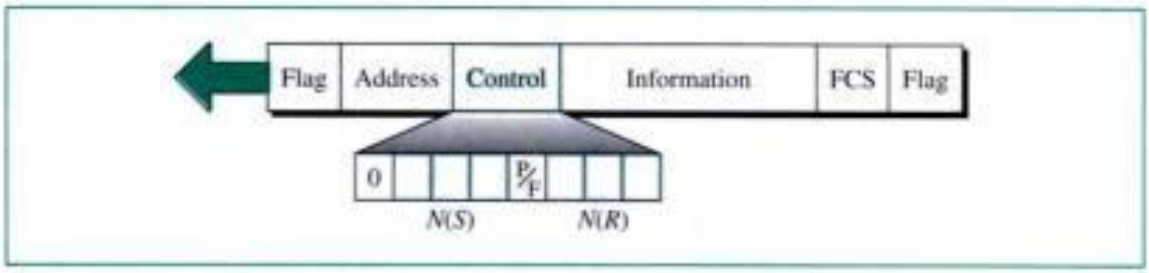

The bits in the control field of the I-frame are interpreted as follows:

- If the first bit of the control field is 0, this means the frame is an I-frame.
- The next 3 bits, called $N(S)$, define the sequence number of the frame in travel. Note that with 3 bits, we can only define a sequence number between 0 and 7. The value of this field corresponds to the value of control variable S, as discussed for the three ARQ mechanisms.
- The next bit is called the P/F bit. The P/F field is a single bit with a dual purpose. It has meaning only when it is set (bit = 1) and can mean poll or final. It means *poll* when the frame is sent by a primary station to a secondary (when the address field contains the address of the receiver). It means *final* when the frame is sent by a secondary to a primary (when the address field contains the address of the sender).
- The next 3 bits, called $N(R)$, correspond to the value of the ACK when piggybacking is used.

S-Frames

Supervisory frames are used for flow and error control whenever piggybacking is either impossible or inappropriate (when the station either has no data of its own to send or needs

Copyrighted material

to send a command or response other than an acknowledgment). S-frames do not have information fields. Figure 11.20 shows the format of the control field for an S-frame.

Figure 11.20 *S-frame control field in HDLC*

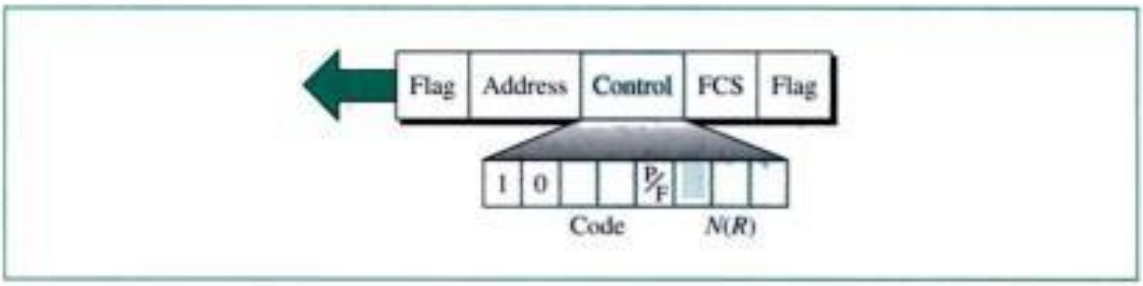

The bits in the control field are interpreted as follows:

- If the first 2 bits of the control field are 10, this means the frame is an S-frame.
- The second 2 bits of the control field of an S-frame is a code that defines the four types of S-frames: receive ready (RR), receive not ready (RNR), reject (REJ), and selective reject (SREJ).
  a. **Receive ready (RR).** If the value of the code subfield is 00, it is an RR S-frame. This kind of frame acknowledges a safe and sound frame or group of frames.
  b. **Receive not ready (RNR).** If the value of the code subfield is 10, it is an RNR S-frame. This kind of frame is the RR frame with additional duties. It acknowledges the receipt of a frame or group of frames, and it announces that the receiver is busy and cannot receive more frames. It acts as a kind of congestion control mechanism by asking the sender to slow down.
  c. **Reject (REJ).** If the value of the code subfield is 01, it is a REJ S-frame. This is a NAK frame, but not like the one used for Selective Repeat ARQ. It is a NAK that can be used in Go-Back-*N* ARQ to improve the efficiency of the process by informing the sender, before the sender time expires, that the last frame is lost or damaged.
  d. **Selective reject (SREJ).** If the value of the code subfield is 11, it is an SREJ S-frame. This is a NAK frame used in Selective Repeat ARQ. Note that the HDLC protocol uses the term *selective reject* instead of *selective repeat*.
- The fifth bit in the control field is the P/F bit, as discussed before.
- The next 3 bits, called *N*(*R*), correspond to the ACK or NAK value.

U-Frames

Unnumbered frames are used to exchange session management and control information between connected devices. Unlike S-frames, U-frames contain an information field, but one used for system management information, not user data. As with S-frames, however, much of the information carried by U-frames is contained in codes included in the control field. U-frame codes are divided into two sections: a 2-bit prefix before the P/F bit and a 3-bit suffix after the P/F bit. Together, these two segments (5 bits) can be used to create up to 32 different types of U-frames. Some of the more common combinations are shown in Figure 11.21.

Copyrighted material

Figure 11.21 *U-frame control field in HDLC*

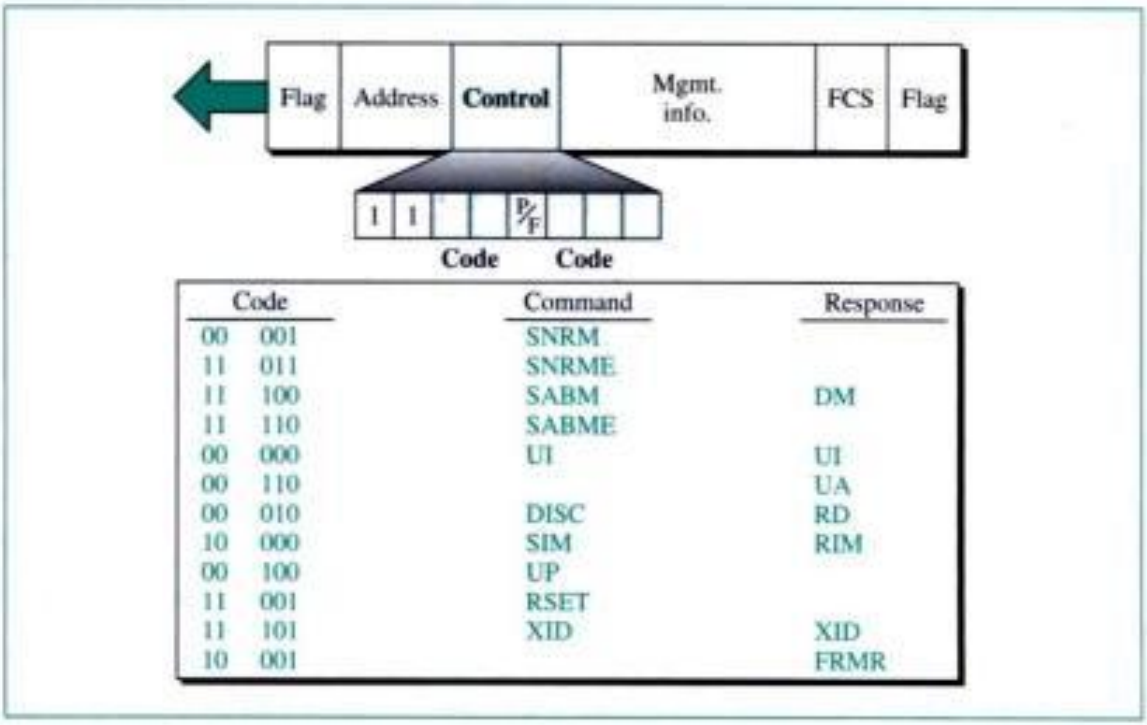

The U-frame commands and responses listed in Table 11.1 can be used for different purposes such as mode setting, exchanging unnumbered frames, and connection and disconnection of the link.

Table 11.1 *U-frame control command and response*

Command/Response	*Meaning*
SNRM	Set normal response mode
SNRME	Set normal response mode (extended)
SABM	Set asynchronous balanced mode
SABME	Set asynchronous balanced mode (extended)
UP	Unnumbered poll
UI	Unnumbered information
UA	Unnumbered acknowledgment
RD	Request disconnect
DISC	Disconnect
DM	Disconnect mode
RIM	Request information mode
SIM	Set initialization mode
RSET	Reset
XID	Exchange ID
FRMR	Frame reject

Copyrighted material

Examples

We give examples of communication using HDLC in this section.

Example 3: Piggybacking without Error

Figure 11.22 shows an exchange.

Figure 11.22 *Example 3*

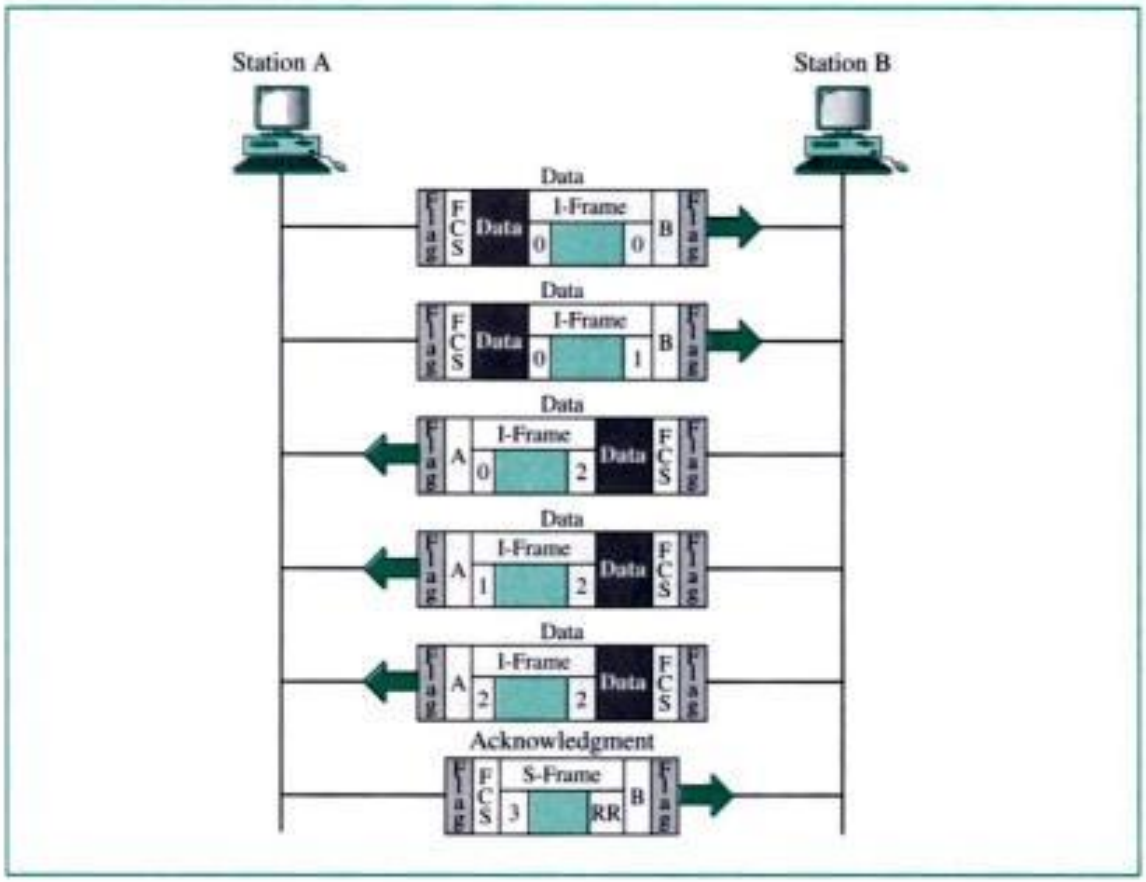

Station A begins the exchange of information with an I-frame numbered 0 followed by another I-frame numbered 1. Station B piggybacks its acknowledgment of both frames onto an I-frame of its own. Station B's first I-frame is also numbered 0 [$N(S)$ field] and contains a 2 in its $N(R)$ field, acknowledging the receipt of A's frames 1 and 0 and indicating that it expects frame 2 to arrive next. Station B transmits its second and third I-frames (numbered 1 and 2) before accepting further frames from station A. Its $N(R)$ information, therefore, has not changed: B frames 1 and 2 indicate that station B is still expecting A frame 2 to arrive next.

Station A has sent all its data. Therefore, it cannot piggyback an acknowledgment onto an I-frame and sends an S-frame instead. The RR code indicates that A is still ready to receive. The number 3 in the $N(R)$ field tells B that frames 0, 1, and 2 have all been accepted and that A is now expecting frame number 3.

Example 4: Piggybacking with Error

In Example 3, suppose frame 1 sent from station B to station A has an error. Station A informs station B to resend frames 1 and 2 (the system is using the Go-Back-N mechanism). Station A sends a reject supervisory frame to announce the error in frame 1. Figure 11.23 shows the exchange.

Copyrighted material

Figure 11.23 *Example 4*

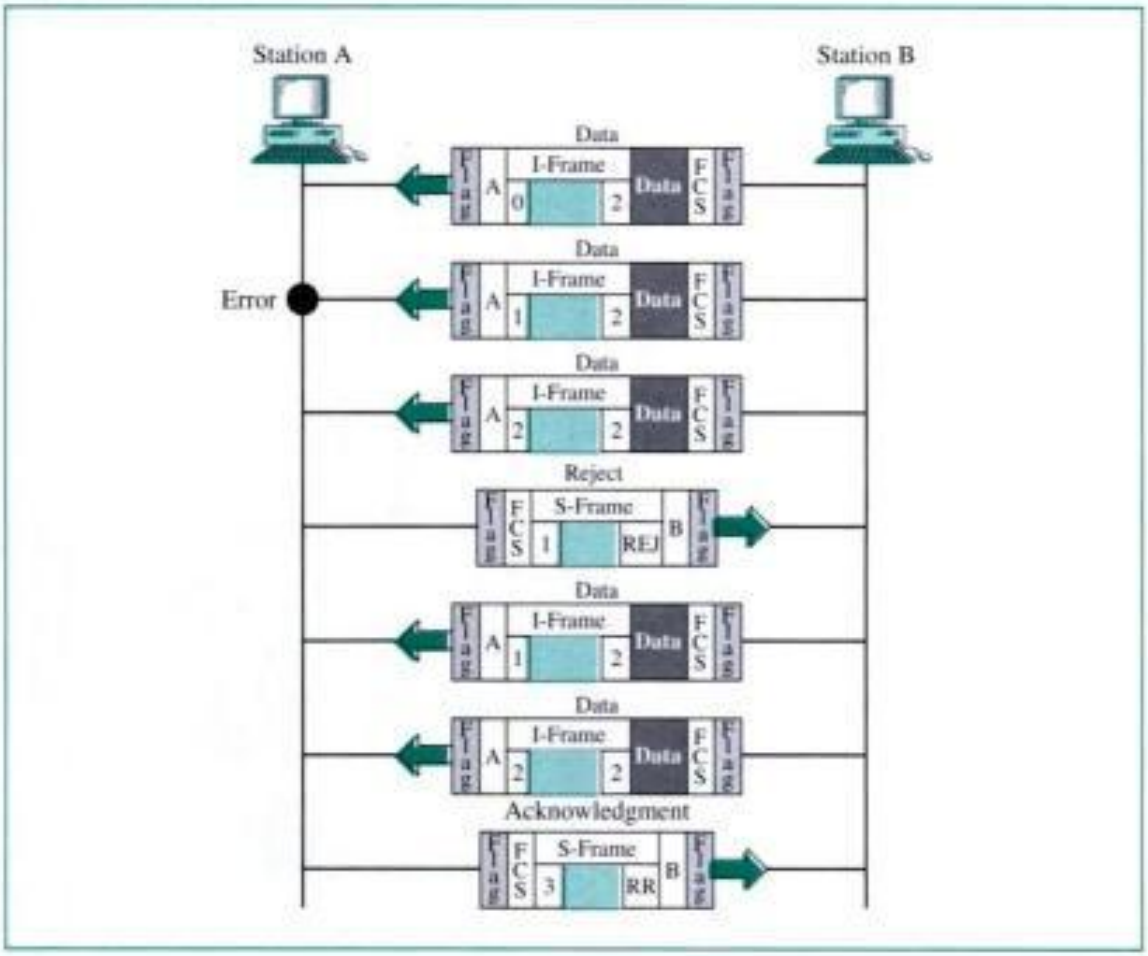

Data Transparency

The data field of the HDLC frame can carry text as well as nontextual information such as graphics, audio, video, or other bit sequences. Unfortunately, some message types can create problems during transmission. For example, if the data field of an HDLC frame contains a pattern that is the same as the sequence reserved for the flag field 01111110, the receiver interprets that sequence as the ending flag. The rest of the bits are assumed to belong to the next frame. This phenomenon is called a lack of **data transparency.** When data are transparent, all data are recognized as data and all control information is recognized as control information. There is no ambiguity as to which is which.

Bit Stuffing

To guarantee that the flag field sequence does not appear inadvertently anywhere else in the frame, HDLC uses a process called **bit stuffing.** Every time a sender wants to transmit a bit sequence having more than five consecutive 1s, it inserts (stuffs) one redundant 0 after the fifth 1. For example, the sequence 011111111000 becomes 0111110111000. This extra 0 is inserted regardless of whether the sixth bit is another 1. Its presence tells the receiver that the current sequence is not a flag. Once the receiver has seen the stuffed 0, the 0 is dropped from the data and the original bit stream is restored.

Copyrighted material

Bit stuffing is the process of adding one extra 0 whenever there are five consecutive 1s in the data so that the receiver does not mistake the data for a flag.

Figure 11.24 shows bit stuffing at the sender and bit removal at the receiver. Note that even if we have a 0 after five 1s, we still stuff a 0. The 0 will be removed by the receiver.

Figure 11.24 *Bit stuffing and removal*

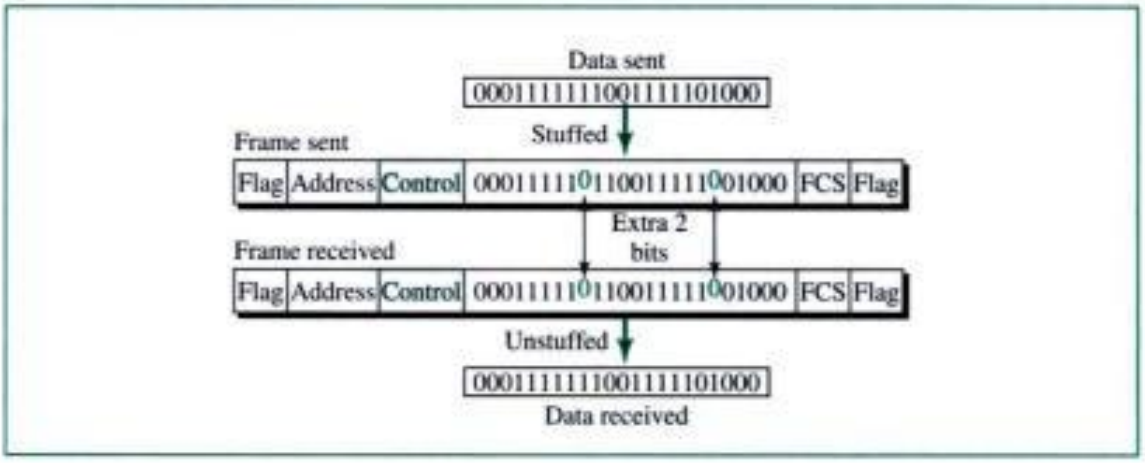

With three exceptions, bit stuffing is required whenever five 1s occur consecutively. The exceptions are when the bit sequence really is a flag, when the transmission is being aborted, and when the channel is idle. The flowchart in Figure 11.25 shows the

Figure 11.25 *Bit stuffing in HDLC*

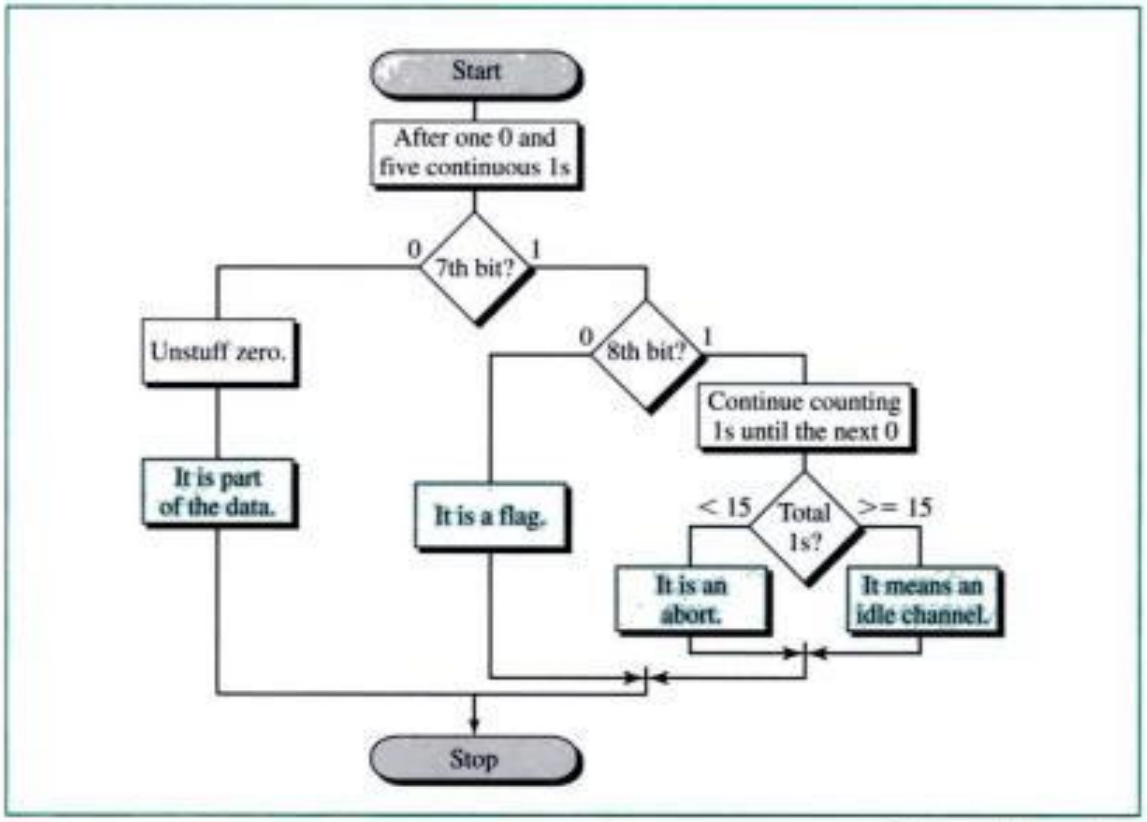

Copyrighted material

process the receiver follows to identify and discard a stuffed bit. As the receiver reads the incoming bits, it counts 1s. When it finds five consecutive 1s after a 0, it checks the next (seventh) bit. If the seventh bit is a 0, the receiver recognizes it as a stuffed bit, discards it, and resets its counter. If the seventh bit is a 1, the receiver checks the eighth bit. If the eighth bit is a 0, the sequence is recognized as a flag and treated accordingly. If the eighth bit is another 1, the receiver continues counting. A total of 7 to 14 consecutive 1s indicates an abort. A total of 15 or more 1s indicates an idle channel.

11.6 KEY TERMS

acknowledgment (ACK)
address field
asynchronous balanced mode (ABM)
automatic repeat request (ARQ)
bandwidth-delay product
bit stuffing
data link control
data transparency
error control
flag field
flow control
frame check sequence (FCS)
Go-Back-*N* ARQ
High-level Data Link Control (HDLC)
information field
information frame (I-frame)
negative acknowledgment (NAK)
normal response mode (NRM)
piggybacking
pipelining
primary station
secondary station
Selective Repeat ARQ
sliding window
Stop-and-Wait ARQ
supervisory frame (S-frame)
unnumbered frame (U-frame)

11.7 SUMMARY

- Flow control is the regulation of the sender's data rate so that the receiver buffer does not become overwhelmed.
- Error control is both error detection and error correction.
- In Stop-and-Wait ARQ, the sender sends a frame and waits for an acknowledgment from the receiver before sending the next frame.
- In Go-Back-*N* ARQ, multiple frames can be in transit at the same time. If there is an error, retransmission begins with the last unacknowledged frame even if subsequent frames have arrived correctly. Duplicate frames are discarded.
- In Selective Repeat ARQ, multiple frames can be in transit at the same time. If there is an error, only the unacknowledged frame is retransmitted.
- Flow control mechanisms with sliding windows have control variables at both sender and receiver sites.
- Piggybacking couples an acknowledgment with a data frame.
- The bandwidth-delay product is a measure of the number of bits a system can have in transit.
- HDLC is a protocol that implements ARQ mechanisms. It supports communication over point-to-point or multipoint links.

Copyrighted material

- HDLC stations communicate in normal response mode (NRM) or asynchronous balanced mode (ABM).
- HDLC protocol defines three types of frames: the information frame (I-frame), the supervisory frame (S-frame), and the unnumbered frame (U-frame).
- HDLC handles data transparency by adding a 0 whenever there are five consecutive 1s following a 0. This is called bit stuffing.

11.8 PRACTICE SET

Review Questions

1. Why is flow control needed?
2. What are three popular ARQ mechanisms?
3. How does ARQ correct an error?
4. Stop-and-Wait ARQ has two control variables *S* and *R*. What are their functions?
5. How does Go-Back-*N* ARQ differ from Selective Repeat ARQ?
6. What is the purpose of the timer at the sender site in systems using ARQ?
7. Discuss the size of the Go-Back-*N* ARQ sliding window at both the sender site and the receiver site.
8. How are a lost acknowledgment and a lost frame handled at the sender site?
9. Discuss the size of the Selective Repeat ARQ sliding window at both the sender site and the receiver site.
10. Which ARQ mechanisms utilize pipelining?
11. How is the bandwidth-delay product related to the system efficiency?
12. In HDLC, what is bit stuffing and why is it needed?
13. Name the types of HDLC frames, and give a brief description of each.
14. Name and discuss briefly the bits in the HDLC control field.
15. What is piggybacking?
16. Name the four types of S-frames.

Multiple-Choice Questions

17. In a Go-Back-*N* ARQ, if the window size is 63, what is the range of sequence numbers?
    a. 0 to 63
    b. 0 to 64
    c. 1 to 63
    d. 1 to 64
18. Flow control is needed to prevent _____.
    a. Bit errors
    b. Overflow of the sender buffer
    c. Overflow of the receiver buffer
    d. Collision between sender and receiver

Copyrighted material

19. In Go-Back-N ARQ, if frames 4, 5, and 6 are received successfully, the receiver may send an ACK _____ to the sender.
    a. 5
    b. 6
    c. 7
    d. Any of the above
20. For a sliding window of size $n - 1$ (n sequence numbers), there can be a maximum of _____ frames sent but unacknowledged.
    a. 0
    b. $n - 1$
    c. n
    d. $n + 1$
21. In _____ ARQ, if a NAK is received, only the specific damaged or lost frame is retransmitted.
    a. Stop-and-Wait
    b. Go-Back-N
    c. Selective Repeat
    d. (a) and (b)
22. ARQ stands for _____.
    a. Automatic repeat quantization
    b. Automatic repeat request
    c. Automatic retransmission request
    d. Acknowledge repeat request
23. A timer is set when _____ is (are) sent out.
    a. A data frame
    b. An ACK
    c. A NAK
    d. All the above
24. For Stop-and-Wait ARQ, for n data packets sent, _____ acknowledgments are needed.
    a. n
    b. $2n$
    c. $n - 1$
    d. $n + 1$
25. HDLC is an acronym for _____.
    a. High-duplex line communication
    b. High-level data link control
    c. Half-duplex digital link combination
    d. Host double-level circuit

Copyrighted material

26. The address field of a frame in HDLC protocol contains the address of the _____ station.
    a. Primary
    b. Secondary
    c. Tertiary
    d. (a) or (b)
27. The HDLC _____ field defines the beginning and end of a frame.
    a. Flag
    b. Address
    c. Control
    d. FCS
28. What is present in all HDLC control fields?
    a. P/F bit
    b. $N(R)$
    c. $N(S)$
    d. Code bits
29. The shortest frame in HDLC protocol is usually the _____ frame.
    a. Information
    b. Supervisory
    c. Management
    d. None of the above
30. When data and acknowledgment are sent on the same frame, this is called _____.
    a. Piggybacking
    b. Backpacking
    c. Piggypacking
    d. A good idea

Exercises

31. Draw the sender and receiver windows for a system using Go-Back-*N* ARQ, given the following:
    a. Frame 0 is sent; frame 0 is acknowledged.
    b. Frames 1 and 2 are sent; frames 1 and 2 are acknowledged.
    c. Frames 3, 4, and 5 are sent; frame 4 is acknowledged; timer for frame 5 expires.
    d. Frames 5, 6, and 7 are sent; frames 4 through 7 are acknowledged.
32. Repeat Exercise 31, using Selective Repeat ARQ.
33. What does the number on a NAK frame mean for Selective Repeat ARQ?
34. What does the number on an ACK frame mean for Selective Repeat ARQ?

Copyrighted material

35. ACK 7 has been received by the sender in a Go-Back-*N* sliding window syste
Now frames 7, 0, 1, 2, and 3 are sent. For each of the following separate scenaric
discuss the significance of the receiving of
    a. An ACK 1
    b. An ACK 4
    c. An ACK 3
36. A Go-Back-*N* ARQ uses a window of size 15. How many bits are needed to defi
the sequence number?
37. A Selective Repeat ARQ is using 7 bits to represent the sequence numbers. What
the size of the window?
38. A computer is using a sliding window of size 7. Complete the following sequen
numbers for 20 packets:

    0, 1, 2, 3, 4, 5, 6, . . .

39. A computer is using the following sequence numbers. What is the size of t
window?

    0, 1, 2, 3, 4, 5, 6, 7, 8, 9, 10, 11, 12, 13, 14, 15, 0, 1, . . .

40. Computer A uses Stop-and-Wait ARQ protocol to send packets to computer B.
the distance between A and B is 4000 km, how long does it take computer A
receive acknowledgment for a packet? Use the speed of light for propagati
speed, and assume the time between receiving and sending the acknowledgme
is zero.
41. In Exercise 40, how long does it take for computer A to send out a packet of si
1000 bytes if the throughput is 100,000 Kbps?
42. Using the results of Exercises 40 and 41, for how much time is computer A idle?
43. Repeat Exercise 42 for a system that uses a sliding window ARQ with a windc
size of 255.
44. Bit-stuff the following data:

    ← 00011111101111100111100111111001

45. Bit-stuff the following data:

    ← 000111111111111111111111111111111111001111111001

Copyrighted material

CHAPTER 12

Point-to-Point Access: PPP

In a network, two devices can be connected by a dedicated link or a shared link. In the first case, the link can be used by the two devices at any time. We refer to this type of access as **point-to-point access.** In the second case, the link is shared between pairs of devices that need to use the link. We refer to this type of access as multiple access.

Multiple access can involve point-to-point access. When two devices in a multiple-access situation get access to the link or a channel in the link, they may need to use a point-to-point access protocol to exchange data. We discuss point-to-point access in this chapter; we defer the discussion of multiple access to Chapter 13.

12.1 POINT-TO-POINT PROTOCOL

One of the most common protocols for point-to-point access is the **Point-to-Point Protocol (PPP).** Today, millions of Internet users who need to connect their home computers to the server of an Internet service provider use PPP. The majority of these users have a traditional modem, a DSL modem, or a cable modem. They are connected to the Internet through either a telephone line or a TV cable connection. The telephone line or the cable TV connection provides a physical link, but to control and manage the transfer of data, there is a need for a point-to-point protocol; PPP is by far the most common.

PPP provides several services that we discuss here:

1. It defines the format of the frame to be exchanged between devices.
2. It defines how two devices can negotiate the establishment of the link and the exchange of data.
3. It defines how network layer data are encapsulated in the data link frame.
4. It defines how two devices can authenticate each other.

Frame Format

PPP employs a version of HDLC. Figure 12.1 shows the format of a PPP frame. The description of each field follows:

- **Flag field.** The flag fields, like the one in HDLC, identify the boundaries of a PPP frame. Its value is 01111110.

Copyrighted material

Figure 12.1 *PPP frame*

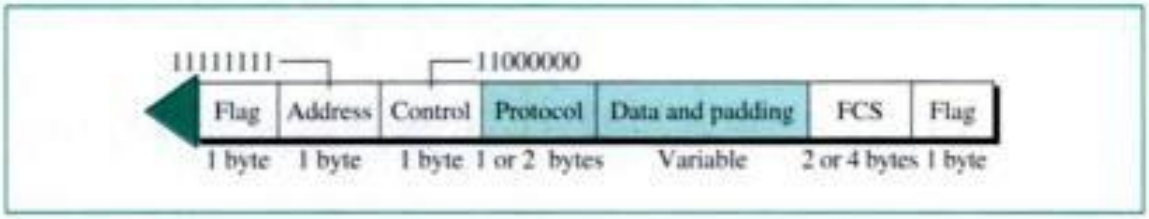

- **Address field.** Because PPP is used for a point-to-point connection, it uses the broadcast address of HDLC, 11111111, to avoid a data link address in the protocol.
- **Control field.** The control field uses the format of the U-frame in HDLC. The value is 11000000 to show that the frame does not contain any sequence numbers and that there is no flow or error control.
- **Protocol field.** The protocol field defines what is being carried in the data field: user data or other information. We discuss this field in detail shortly.
- **Data field.** This field carries either the user data or other information that we will discuss shortly.
- **Frame check sequence (FCS) field.** The FCS, as in HDLC, is simply a 2-byte or 4-byte CRC.

Transition States

A PPP connection goes through different phases which can be shown in a **transition state** diagram (see Fig. 12.2).

Figure 12.2 *Transition states*

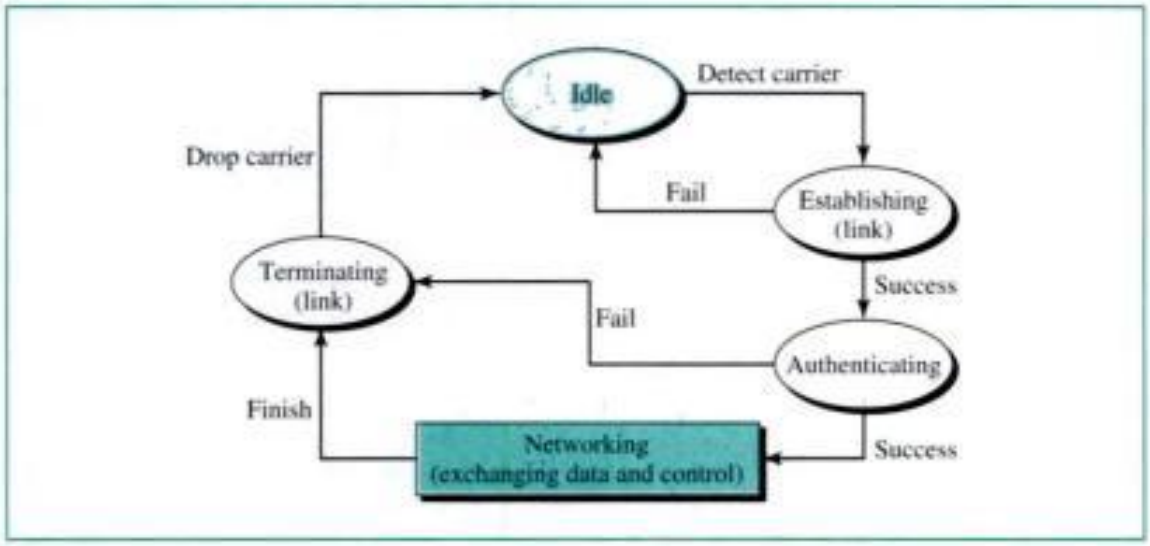

- **Idle state.** The **idle state** means that the link is not being used. There is no active carrier, and the line is quiet.
- **Establishing state.** When one of the endpoints starts the communication, the connection goes into the **establishing state.** In this state, options are negotiated

Copyrighted material

between the two parties. If the negotiation is successful, the system goes to the authenticating state (if authentication is required) or directly to the networking state. The link control protocol packets, discussed shortly, are used for this purpose. Several packets may be exchanged during this state.

- **Authenticating state.** The **authenticating state** is optional; the two endpoints may decide, during the establishing state, not to go through this state. However, if they decide to proceed with authentication, they send several authentication packets, discussed in a later section. If the result is successful, the connection goes to the networking state; otherwise, it goes to the terminating state.
- **Networking state.** The **networking state** is the heart of the transition states. When a connection reaches this state, the exchange of user control and data packets can be started. The connection remains in this state until one of the endpoints wants to terminate the connection.
- **Terminating state.** When the connection is in the **terminating state,** several packets are exchanged between the two ends for house cleaning and closing the link.

12.2 PPP STACK

Although PPP is a data-link layer protocol, PPP uses a stack of other protocols to establish the link, to authenticate the parties involved, and to carry the network layer data. Three sets of protocols are defined to make PPP a powerful protocol: Link Control Protocol, authentication protocols, and Network Control Protocol. At any moment, a PPP packet can carry packets related to one of these protocols in its data field, as shown in Figure 12.3.

Figure 12.3 *Protocol stack*

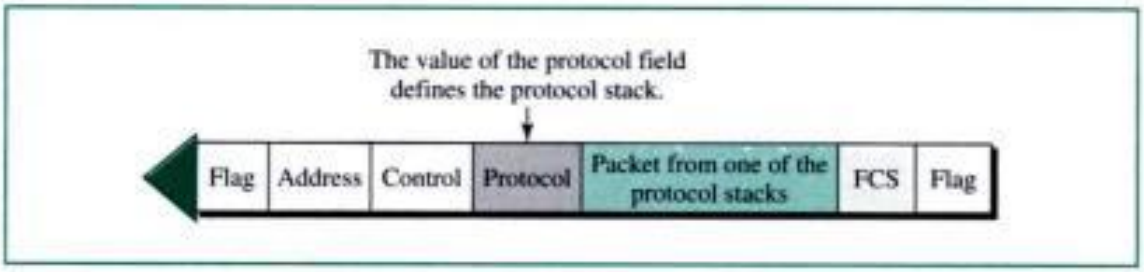

Link Control Protocol (LCP)

One of the protocols in the protocol stack is the **Link Control Protocol (LCP).** It is responsible for establishing, maintaining, configuring, and terminating links. It also provides negotiation mechanisms to set options between the two endpoints. Both endpoints of the link must reach an agreement about the options before the link can be established.

Note that when PPP is carrying an LCP packet, it is either in the establishing state or in the terminating state. No user data are carried during these states.

Copyrighted material

All LCP packets are carried in the data field of the PPP frame. What defines the frame as one carrying an LCP packet is the value of the protocol field, which is set to $C021_{16}$. Figure 12.4 shows the format of the LCP packet.

Figure 12.4 *LCP packet encapsulated in a frame*

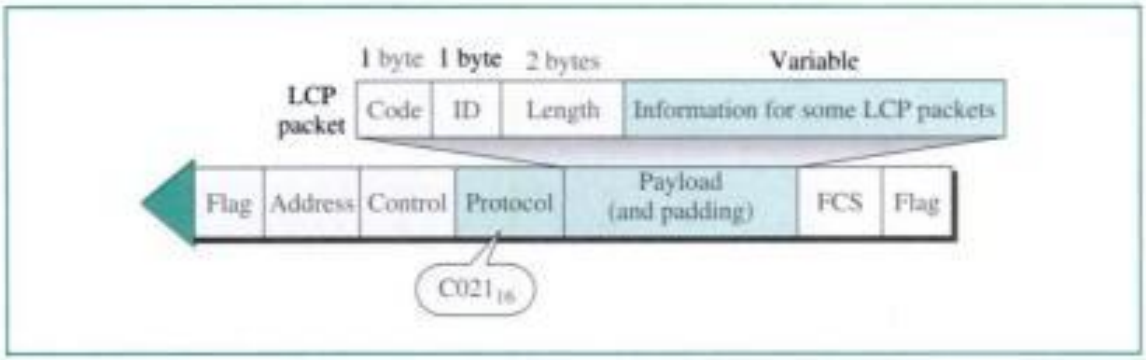

The descriptions of the fields are as follows:

- **Code.** This field defines the type of LCP packet. We will discuss these packets and their purpose in the next section.
- **ID.** This field holds a value used to match a request with the reply. One endpoint inserts a value in this field, which will be copied in the reply packet.
- **Length.** This field defines the length of the entire LCP packet.
- **Information.** This field contains extra information needed for some LCP packets.

LCP Packets

Table 12.1 lists some LCP packets.

Table 12.1 *LCP packets and their codes*

Code	*Packet Type*	*Description*
01_{16}	Configure-request	Contains the list of proposed options and their values
02_{16}	Configure-ack	Accepts all options proposed
03_{16}	Configure-nak	Announces that some options are not acceptable
04_{16}	Configure-reject	Announces that some options are not recognized
05_{16}	Terminate-request	Requests to shut down the line
06_{16}	Terminate-ack	Accepts the shut down request
07_{16}	Code-reject	Announces an unknown code
08_{16}	Protocol-reject	Announces an unknown protocol
09_{16}	Echo-request	A type of hello message to check if the other end is alive
$0A_{16}$	Echo-reply	The response to the echo-request message
$0B_{16}$	Discard-request	A request to discard the packet

Copyrighted material

Configuration Packets Configuration packets are used to negotiate the options between two ends. Four different packets are used for this purpose: configure-request, configure-ack, configure-nak, and configure-reject.

- **Configure-request.** The endpoint that wishes to start a connection sends a configure-request message with a list of zero or more options to the other endpoint. Note that all the options are negotiated in one packet.
- **Configure-ack.** If all the options listed in the configure-request packet are accepted by the receiving end, it sends a configure-ack packet, which repeats all the options requested.
- **Configure-nak.** If the receiver of the configure-request packet recognizes all the options but finds that some need to be omitted or revised (the values must be changed), it sends a configure-nak packet to the sender. The sender then omits or revises the options and sends a totally new configure-request packet.
- **Configure-reject.** If some of the options are not recognized by the receiving party, it responds with a configure-reject packet, marking those options that are not recognized. The sender of the request must revise the configure-request message and send a totally new one.

Link Termination Packets The link termination packets are used to disconnect the link between two endpoints.

- **Terminate-request.** Either party can terminate the link by sending a terminate-request packet.
- **Terminate-ack.** The party that receives the terminate-request packet must answer with a terminate-ack packet.

Link Monitoring and Debugging Packets These packets are used for monitoring and debugging the link.

- **Code-reject.** If the endpoint receives a packet with an unrecognized code in the packet, it sends a code-reject packet.
- **Protocol-reject.** If the endpoint receives a packet with an unrecognized protocol in the frame, it sends a protocol-reject packet.
- **Echo-request.** This packet is sent to monitor the link. Its purpose is to see if the link is functioning. The sender expects to receive an echo-reply packet from the other side as proof.
- **Echo-reply.** This packet is sent in response to an echo-request. The information field in the echo-request packet is exactly duplicated and sent back to the sender of the echo-request packet.
- **Discard-request.** This is a kind of loopback test packet. It is used by the sender to check its internal condition. The receiver of the packet just discards it.

Options

There are many options that can be negotiated between the two endpoints. Options are inserted in the information field of the configuration packets. We list some of the most common options in Table 12.2.

Copyrighted material

Table 12.2 *Common options*

Option	*Default*
Maximum receive unit	1500
Authentication protocol	None
Protocol field compression	Off
Address and control field compression	Off

Authentication Protocols

Authentication plays a very important role in PPP because PPP is designed for use over dial-up links where verification of user identity is necessary. **Authentication** means validating the identity of a user who needs to access a set of resources. PPP has created two protocols for authentication: Password Authentication Protocol (PAP) and Challenge Handshake Authentication Protocol (CHAP). Note that these protocols are used during the authentication state. During this state, no user data are exchanged, only the corresponding packets to authenticate the user.

PAP

The **Password Authentication Protocol (PAP)** is a simple authentication procedure with a two-step process:

1. The user who wants to access a system sends an authentication identification (usually the user name) and a password.
2. The system checks the validity of the identification and password and either accepts or denies connection.

For those systems that require greater security, PAP is not enough; a third party with access to the link can easily pick up the password and access the system resources. Figure 12.5 shows the PAP concept.

Figure 12.5 *PAP*

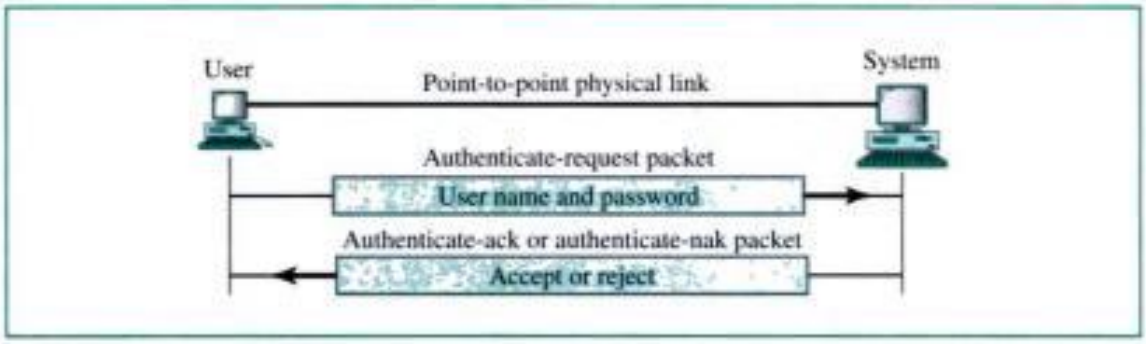

PAP Packets PAP packets are encapsulated in a PPP frame. What distinguishes a PAP packet from other packets is the value of the protocol field, $C023_{16}$. There are three PAP packets: authenticate-request, authenticate-ack, and authenticate-nak. The first packet is used by the user to send the user name and password. The second is used by the system to

Copyrighted material

allow access. The third is used by the system to deny access. Figure 12.6 shows the format of the three packets.

Figure 12.6 *PAP packets*

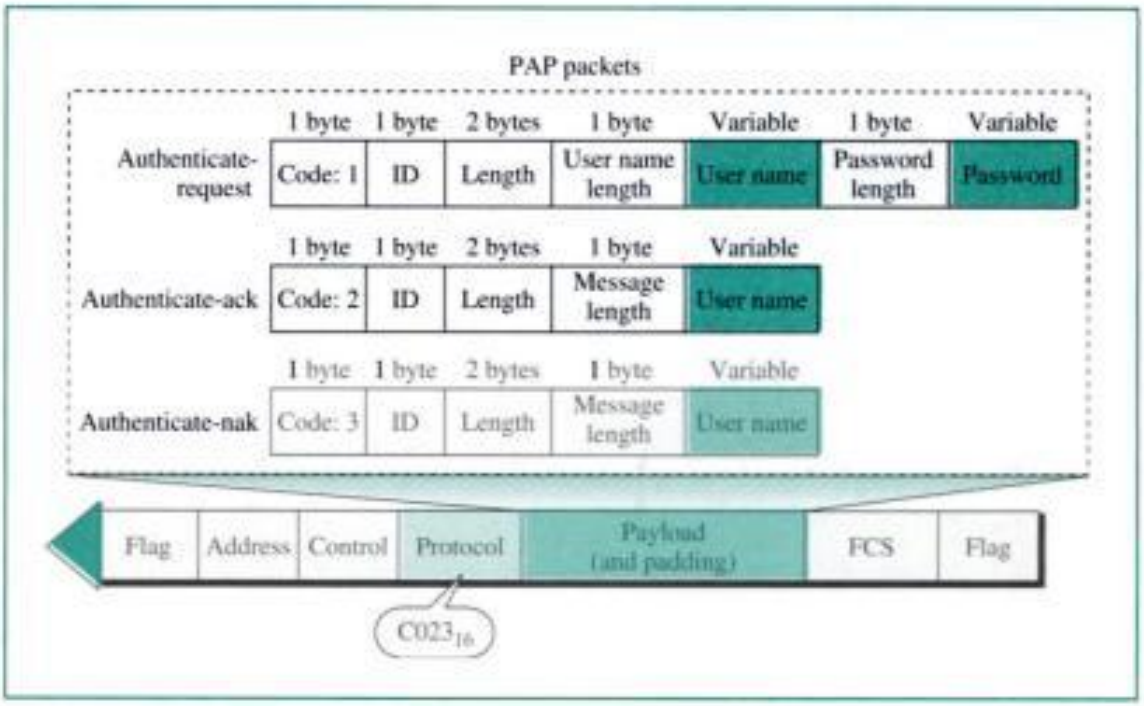

CHAP

The **Challenge Handshake Authentication Protocol (CHAP)** is a three-way handshaking authentication protocol that provides greater security than PAP. In this method, the password is kept secret; it is never sent on-line.

- The system sends to the user a challenge packet containing a challenge value, usually a few bytes.
- The user applies a predefined function that takes the challenge value and the user's own password and creates a result. The user sends the result in the response packet to the system.
- The system does the same. It applies the same function to the password of the user (known to the system) and the challenge value to create a result. If the result created is the same as the result sent in the response packet, access is granted; otherwise, it is denied.

CHAP is more secure than PAP, especially if the system continuously changes the challenge value. Even if the intruder learns the challenge value and the result, the password is still secret. Figure 12.7 shows the concept.

CHAP Packets

CHAP packets are encapsulated in the PPP frame. What distinguishes a CHAP packet from other packets is the value of the protocol field, $C223_{16}$. There are four CHAP packets: challenge, response, success, and failure. The first packet is used by the system to

Copyrighted material

Figure 12.7 *CHAP*

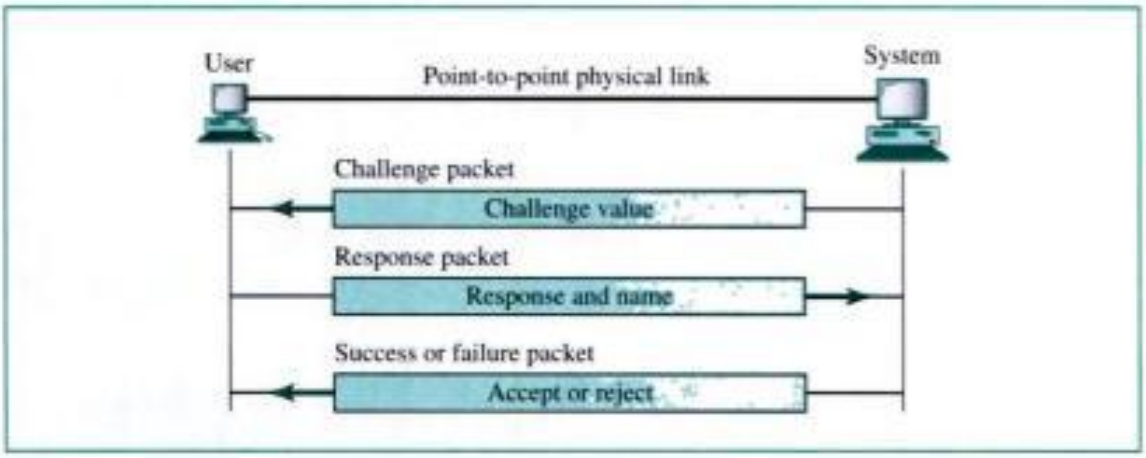

Figure 12.8 *CHAP packets*

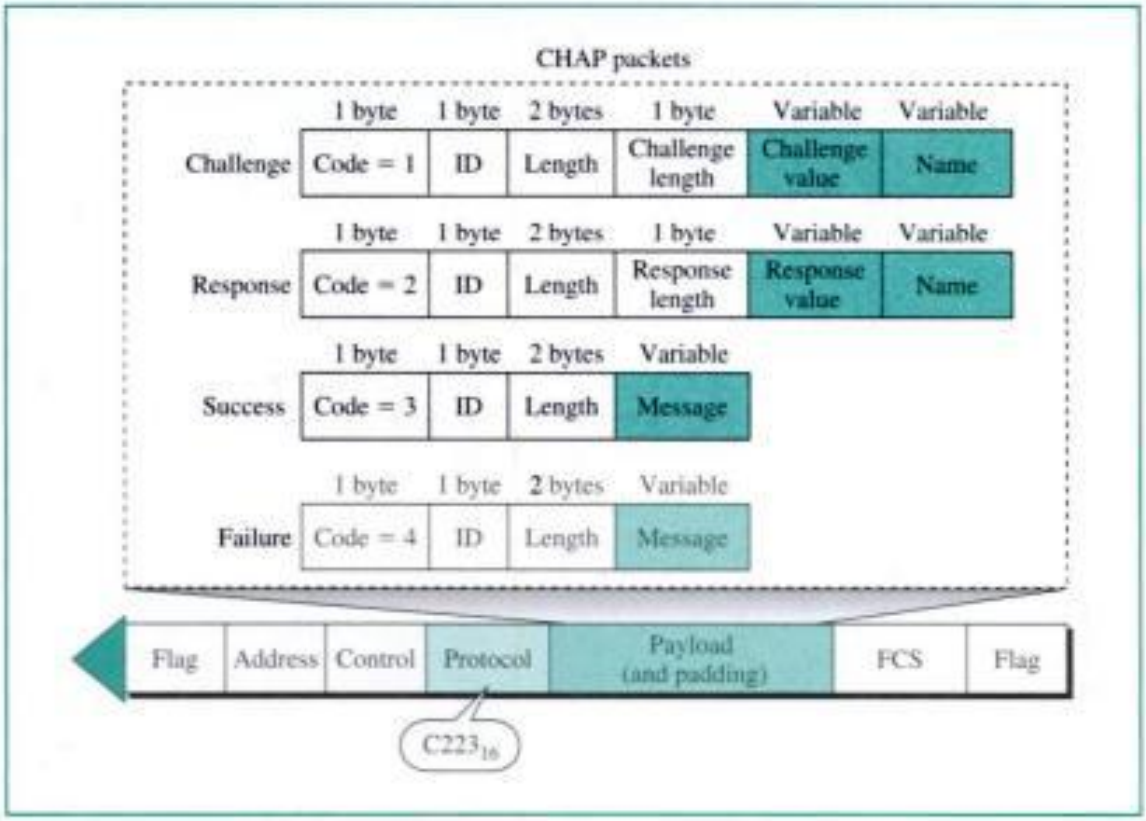

send the challenge value. The second is used by the user to return the result of the calculation. The third is used by the system to allow access to the system. The fourth is used by the system to deny access to the system. Figure 12.8 shows the format of the four packets.

Network Control Protocol (NCP)

After the link is established and authentication (if any) is successful, the connection goes to the networking state. In this state, PPP uses another protocol called **Network**

Copyrighted material

Control Protocol (NCP). NCP is a set of control protocols to allow the encapsulation of data coming from network layer protocols into the PPP frame.

IPCP

PPP requires two parties to negotiate not only at the data link layer, but also at the network layer. Before user data can be sent, a connection must be established at this level. The set of packets that establish and terminate a network layer connection for IP packets (see Chapter 19) is called **Internetwork Protocol Control Protocol (IPCP).** The format of an IPCP packet is shown in Figure 12.9. Note that the value of the protocol field, 8021_{16}, defines the packet encapsulated in the protocol as an IPCP packet.

Figure 12.9 *IPCP packet encapsulated in PPP frame*

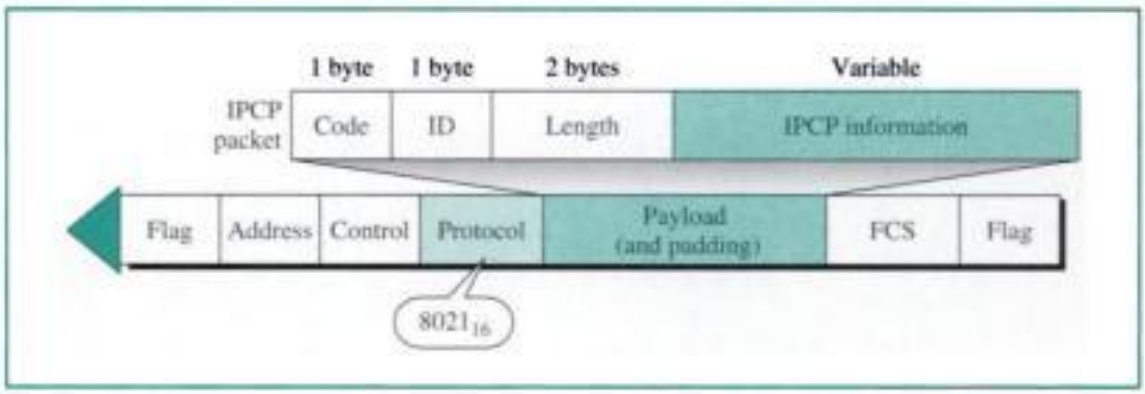

Seven packets are defined for the IPCP, distinguished by their code values, as shown in Table 12.3.

Table 12.3 *Code value for IPCP packets*

Code	*IPCP Packet*
01	Configure-request
02	Configure-ack
03	Configure-nak
04	Configure-reject
05	Terminate-request
06	Terminate-ack
07	Code-reject

A party uses the configure-request packet to negotiate options with the other party, to set the IP addresses, and so on.

After configuration, the link is ready to carry IP data in the payload field of a PPP frame. This time, the value of the protocol field is 0021_{16}, to show that an IP data packet, not the IPCP packet, is being carried across the link.

After IP has sent all its packets, the IPCP can take control and use the terminate-request and terminate-ack packets to end the network connection.

Copyrighted material

Other Protocols

Although our discussion here is limited to the use of Internet packets, PPP can carry different packets belonging to other protocols.

An Example

Let us go through the states when network layer packets are transmitted through a PPP connection. Figure 12.10 shows the steps:

Figure 12.10 *An example*

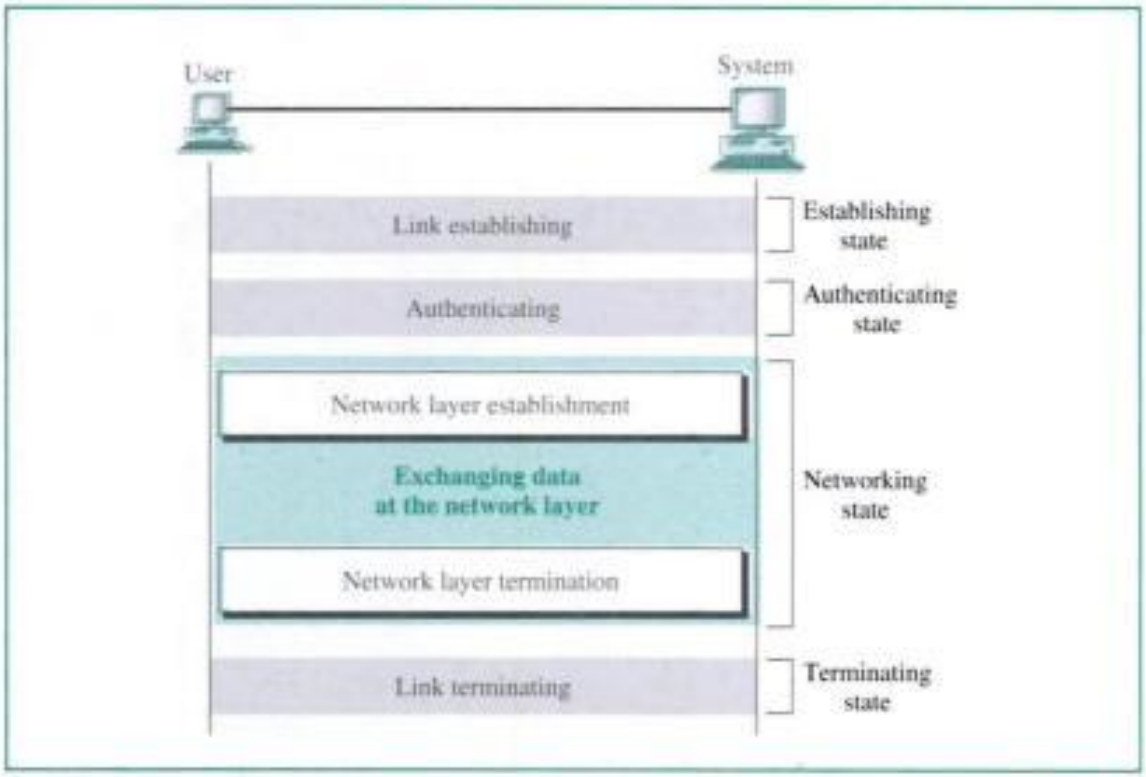

- **Establishing.** The user sends a configure-request packet to negotiate the options for establishing the link. The user requests PAP authentication. After the user receives a configure-ack packet, link establishment is over.
- **Authenticating.** The user sends an authenticate-request packet which includes the user name and password. After it receives the configure-ack packet, the authentication phase is over.
- **Networking.** Now the user sends an configure-request packet to negotiate the options for the network layer activity. After it receives a configure-ack packet, the user can send the network layer data, which may take multiple frames. After all data are sent, the user sends the terminate-request packet to terminate the network layer activity. When the terminate-ack packet is received, the networking phase is complete. The connection goes to the terminating state.
- **Terminating.** The user sends the terminate-request packet to terminate the link. With the receipt of the terminate-ack packet, the link is terminated.

Copyrighted material

12.3 KEY TERMS

authenticating state
authentication
Challenge Handshake Authentication Protocol (CHAP)
establishing state
idle state
Internetwork Protocol Control Protocol (IPCP)
Link Control Protocol (LCP)
Network Control Protocol (NCP)
networking state
Password Authentication Protocol (PAP)
point-to-point access
Point-to-Point Protocol (PPP)
terminating state
transition state diagram

12.4 SUMMARY

- The Point-to-Point Protocol (PPP) was designed to provide a dedicated line for users who need Internet access via a telephone line or a cable TV connection.
- A PPP connection goes through these phases: idle, establishing, authenticating (optional), networking, and terminating.
- At the data link layer, PPP employs a version of HDLC.
- The Link Control Protocol (LCP) is responsible for establishing, maintaining, configuring, and terminating links.
- Password Authentication Protocol (PAP) and Challenge Handshake Authentication Protocol (CHAP) are two protocols used for authentication in PPP.
- PAP is a two-step process. The user sends authentication identification and a password. The system determines the validity of the information sent.
- CHAP is a three-step process. The system sends a value to the user. The user manipulates the value and sends its result. The system verifies the result.
- Network Control Protocol (NCP) is a set of protocols to allow the encapsulation of data coming from network layer protocols; each set is specific for a network layer protocol that requires the services of PPP.
- Internetwork Protocol Control Protocol (IPCP), an NCP protocol, establishes and terminates a network layer connection for IP packets.

12.5 PRACTICE SET

Review Questions

1. Which type of user needs PPP?
2. Describe each of the states of a PPP connection.
3. Name three protocols that make up the PPP stack.
4. What is the purpose of the protocol field in the PPP frame?
5. Discuss the control field of the PPP frame.
6. What is the purpose of the LCP?

Copyrighted material

7. Discuss the relationship between the LCP packet and the PPP frame.
8. What are the categories of LCP packets? What is the function of each category?
9. What two protocols are used for authentication in PPP?
10. How does PAP work? What is its primary deficiency?
11. How does CHAP work? Why is it superior to PAP?
12. How does the PPP frame carry authentication packets from PAP and CHAP?
13. What is the purpose of NCP?
14. What is the relationship between IPCP and NCP?

Multiple-Choice Questions

15. According to the PPP transition state diagram, exchange of user control and data packets occurs in the _____ state.
    a. Establishing
    b. Authenticating
    c. Networking
    d. Terminating
16. According to the PPP transition state diagram, options are negotiated in the _____ state.
    a. Establishing
    b. Authenticating
    c. Networking
    d. Terminating
17. According to the PPP transition state diagram, verification of user identification occurs in the _____ state.
    a. Establishing
    b. Authenticating
    c. Networking
    d. Terminating
18. According to the PPP transition state diagram, the link is disconnected in the _____ state.
    a. Establishing
    b. Authenticating
    c. Networking
    d. Terminating
19. In the PPP frame, the _____ field defines the contents of the data field.
    a. Flag
    b. Control
    c. Protocol
    d. FCS
20. In the PPP frame, the _____ field is similar to that of the U-frame in HDLC.

Copyrighted material

a. Flag
b. Control
c. Protocol
d. FCS

21. In the PPP frame, the _____ field has a value of 11111111 to indicate the broadcast address of HDLC.
    a. Address
    b. Control
    c. Protocol
    d. FCS
22. In the PPP frame, the _____ field is for error control.
    a. Flag
    b. Control
    c. Protocol
    d. FCS
23. What is the purpose of LCP packets?
    a. Configuration
    b. Termination
    c. Option negotiation
    d. All the above
24. _____ is a three-way handshake for user verification.
    a. PPP
    b. CHAP
    c. PAP
    d. (b) and (c)
25. A PAP packet and a CHAP packet can be distinguished by the value of the _____ field of the PPP frame.
    a. Address
    b. Control
    c. Protocol
    d. FCS
26. PAP requires _____ and _____ from the user.
    a. A password; a calculated value
    b. Authentication identification; a password
    c. A challenge value; a password
    d. Authentication identification; a calculated value
27. For CHAP authentication, the user takes the system's _____ and its own _____ to create a result that is then sent to the system.
    a. Authentication identification; password
    b. Password; challenge value

Copyrighted material

c. Password; authentication identification

d. Challenge value; password

28. _____, an (a)_____ protocol, establishes and terminates a network layer connection for IP packets.

a. NCP; IPCP

b. CHAP; NCP

c. IPCP; NCP

d. SLIP; PPP

Exercises

29. What are the values of the flag, address, and control fields in hexadecimal?

30. Make a table to compare the PPP frame with the U-frame of HDLC. Which fields are the same? Which fields are different?

31. The value of the first few bytes of a frame is $7EFFC0C02105_{16}$. What is the protocol of the encapsulated payload? What is the type of packet?

32. The value of the first few bytes of a frame is $7EFFC0C02109110014_{16}$. What is the protocol of the encapsulated payload? What type of packet is being carried? How many bytes of information are in the packet?

33. Show the contents of a configure-nak packet in the LCP. Encapsulate the packet in a PPP frame.

34. Show the contents of a configure-nak packet in the NCP. Encapsulate the packet in a PPP frame.

35. Compare the results of Exercises 33 and 34. What differences do you see?

36. Show the contents of an echo-request packet with the message "Hello." Write the whole packet in hexadecimal. Encapsulate the packet in a PPP frame, and show the contents in hexadecimal.

37. Show the contents of an echo-reply in response to the packet in Exercise 36. Write the whole packet in hexadecimal. Encapsulate the packet in a PPP frame, and show the contents in hexadecimal.

38. Show the contents of an authenticate-request packet using "Forouzan" as the user name and "797979" as the password. Encapsulate the packet in a PPP frame.

39. Show the contents of the authenticate-ack that is received in response to the packet in Exercise 38.

40. Show the contents of a challenge packet (CHAP) using $A4253616_{16}$ as the challenge value. Encapsulate the packet in a PPP frame.

41. Show the contents of a response packet (CHAP) using $6163524A_{16}$ as the response value. Encapsulate the packet in a PPP frame.

42. A system sends the challenge value $2A2B1425_{16}$. The password of the user is 22112211_{16}. The function to be used by the user adds the challenge value to the password; the result should be split into two and swapped to get the response. Show the response of the user.

Copyrighted material

43. If a user sends an LCP packet with code 02_{16}, what is the state of the connection after this event?
44. A connection is in the establishing state. If the user receives an LCP configure-nak packet, what is the new state?
45. A connection is in the networking state. If the user receives an NCP configure-nak packet, what is the new state?
46. Show the contents of all frames in Figure 12.10. What protocol (LCP, NCP, authentication, and so on) is involved in each transmission?

Copyrighted material

Copyrighted material

CHAPTER 13

Multiple Access

When nodes or stations are connected to or use a common link, called a multipoint or broadcast link, we need a multiple-access protocol to coordinate access to the link. The problem of controlling the access to the medium is similar to the rules of speaking in an assembly. Different procedures guarantee that the right to speak is upheld and ensure that two people do not speak at the same time, do not interrupt each other, do not monopolize the discussion, and so on.

The situation is the same with multipoint networks. Many formal protocols have been devised to handle access to the shared link. We categorize them into three groups. Protocols belonging to each group are shown in Figure 13.1.

Figure 13.1 *Multiple-access protocols*

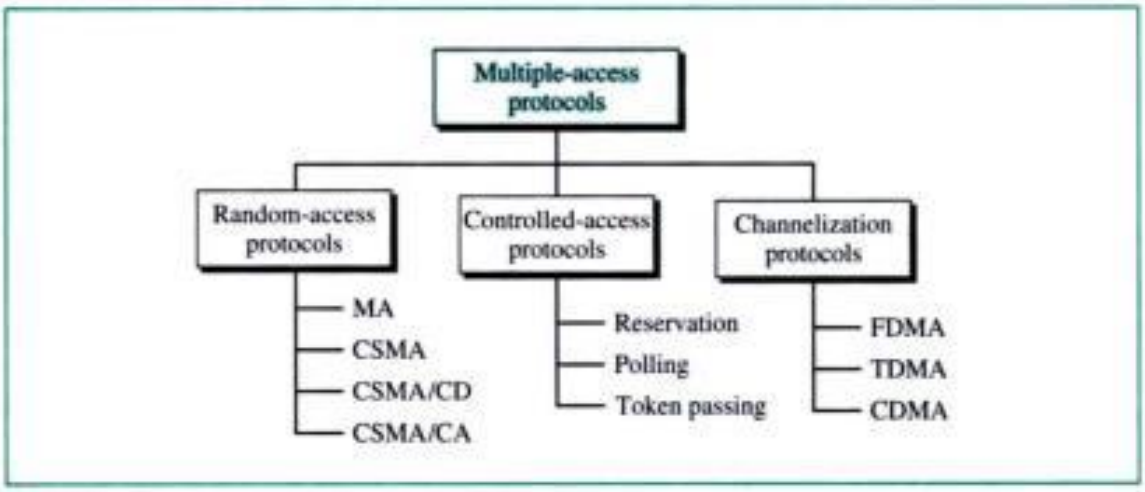

13.1 RANDOM ACCESS

In a random access method, each station has the right to the medium without being controlled by any other station. However, if more than one station tries to send, there is an access conflict (**collision**) and the frames will be either destroyed or modified. To avoid access conflict or to resolve it when it happens, we need a procedure that answers the

Copyrighted material

following questions:

- When can the station access the medium?
- What can the station do if the medium is busy?
- How can the station determine the success or failure of the transmission?
- What can the station do if there is an access conflict?

The random-access methods we study in this chapter have evolved as shown in Figure 13.2.

Figure 13.2 *Evolution of random-access methods*

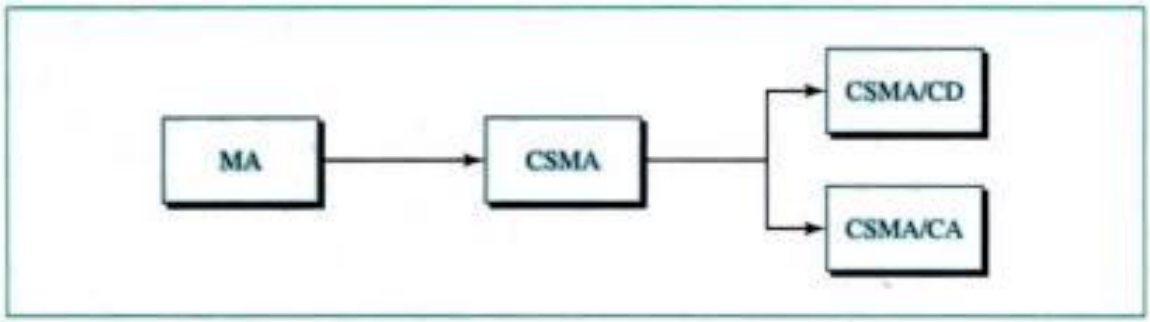

The first method, known as ALOHA, used a very simple procedure called **multiple access (MA).** The method was improved with the addition of a procedure that forced the station to sense the medium before transmitting. This was called carrier sense multiple access (CSMA). This method later evolved into two parallel methods: CSMA/CD and CSMA/CA. CSMA/CD (CSMA with collision detection) defines procedures to be followed if a collision is detected while CSMA/CA (CSMA with collision avoidance) defines procedures to avoid the collision.

Multiple Access (MA)

ALOHA, the earliest random-access method, was developed at the University of Hawaii in the early 1970s. It was designed to be used on a radio (wireless) local area network (LAN) with a data rate of 9600 bps.

Figure 13.3 shows the basic idea behind an ALOHA network. A base station is the central controller. Every station that needs to send a frame to another station first sends it to the base station. The base station receives the frame and relays it to the intended destination. In other words, the base station acts as a hop. The uploading transmission (from a station to the base station) uses modulation with a carrier frequency of 407 MHz. The downloading transmission (from the base station to any station) uses a carrier frequency of 413 MHz.

It is obvious that there are potential collisions in this arrangement. The medium (air) is shared between the stations. When a station sends data at frequency 407 MHz to the base station, another station may attempt to do so at the same time. The data from the two stations collide and become garbled. The ALOHA protocol is very simple. It is

Copyrighted material

Figure 13.3 *ALOHA network*

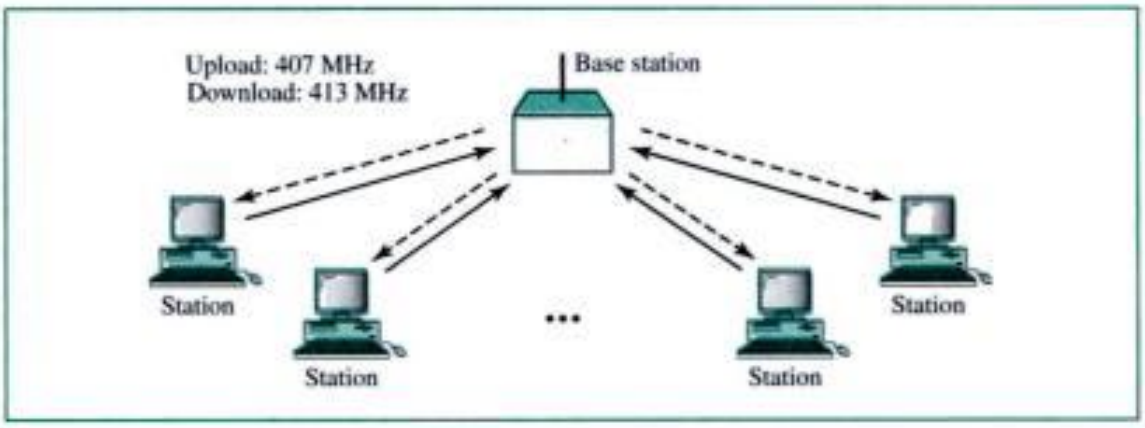

based on the following rules:

- **Multiple access.** Any station sends a frame when it has a frame to send.
- **Acknowledgment.** After sending the frame, the station waits for an acknowledgment (explicit or implicit). If it does not receive an acknowledgment during the allotted time, which is 2 times the maximum propagation delay (the time it takes for the first bit of the frame to reach every station), it assumes that the frame is lost; it tries sending again after a random amount of time.

The protocol flowchart is shown in Figure 13.4. A station that has a frame to send sends it. It then waits for a period of time, which is 2 times the maximum propagation delay. If it receives an acknowledgment, the transmission is successful. If there is no acknowledgment during this period, the station uses a backoff strategy (explained later) and sends the packet again. After several tries, if there is no acknowledgment, the station gives up.

Figure 13.4 *Procedure for ALOHA protocol*

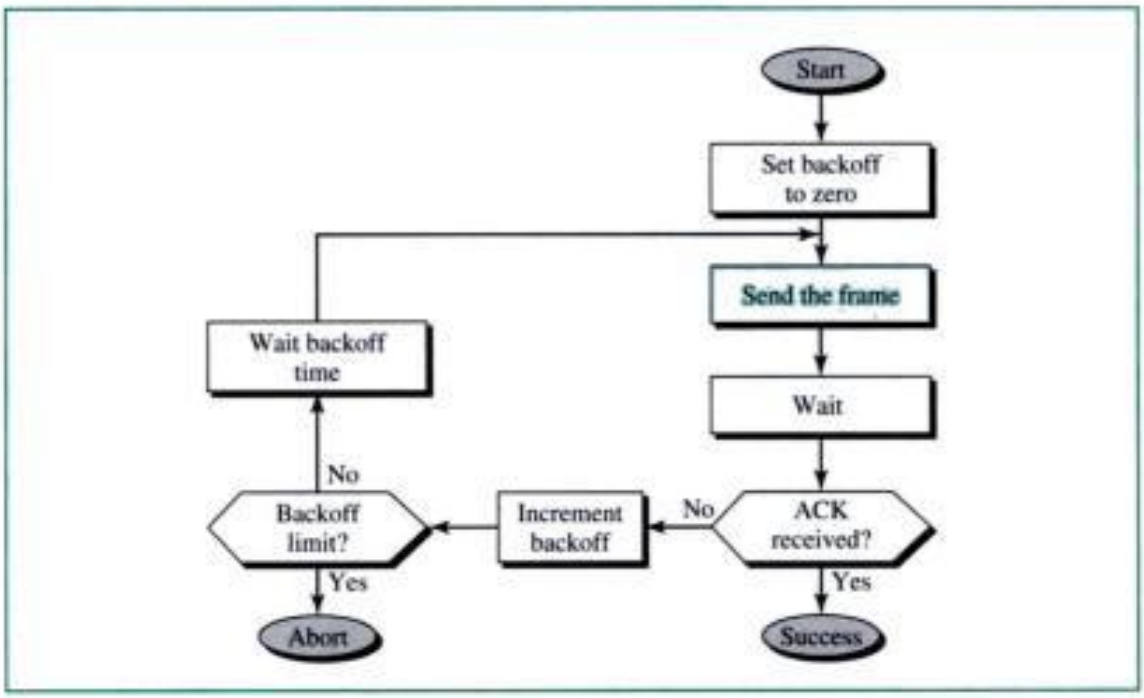

Copyrighted material

Carrier Sense Multiple Access (CSMA)

To minimize the chance of collision and, therefore, increase the performance, the CSMA method was developed. The chance of collision can be reduced if a station senses the medium before trying to use it. **Carrier sense multiple access (CSMA)** requires that each station first listen to the medium (or check the state of the medium) before sending. In other words, the CSMA is based on the principle "sense before transmit" or "listen before talk."

CSMA can reduce the possibility of collision, but it cannot eliminate it. One might ask why there may be a collision if each station listens to the medium before transmitting a frame. The possibility of collision still exists because of the propagation delay; when a station sends a frame, it takes a while (although very short) for the first bit to reach every station and for every station to sense it. In other words, a station may sense the medium and find it idle, only because propagation by another station has not yet reached this station. Figure 13.5 shows how a collision may happen.

Figure 13.5 *Collision in CSMA*

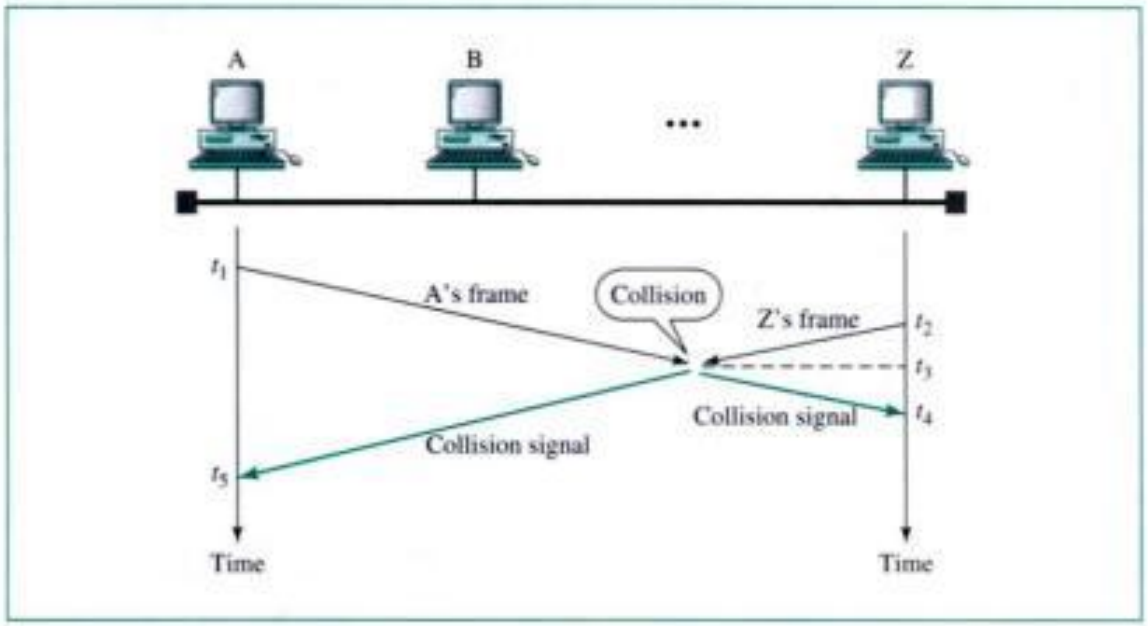

At time t_1, station A at the left end of the medium senses the medium. The medium is idle, so it sends a frame. At time t_2 ($t_2 > t_1$), station Z at the right end of the medium senses the medium and finds it idle because, at this time, propagation from station A has not reached station Z. Station Z also sends a frame. The two signals collide at time t_3 ($t_3 > t_2 > t_1$). Note that the result of the collision, which is a garbled signal, will also propagate now in both directions. It reaches station Z at time t_4 ($t_4 > t_3 > t_2 > t_1$) and station A at time t_5 ($t_5 > t_4 > t_3 > t_2 > t_1$).

Persistence Strategy

The **persistence strategy** defines the procedures for a station that senses a busy medium. Two substrategies have been devised: nonpersistent and persistent. (see Fig. 13.6).

Copyrighted material

Figure 13.6 *Persistence strategies*

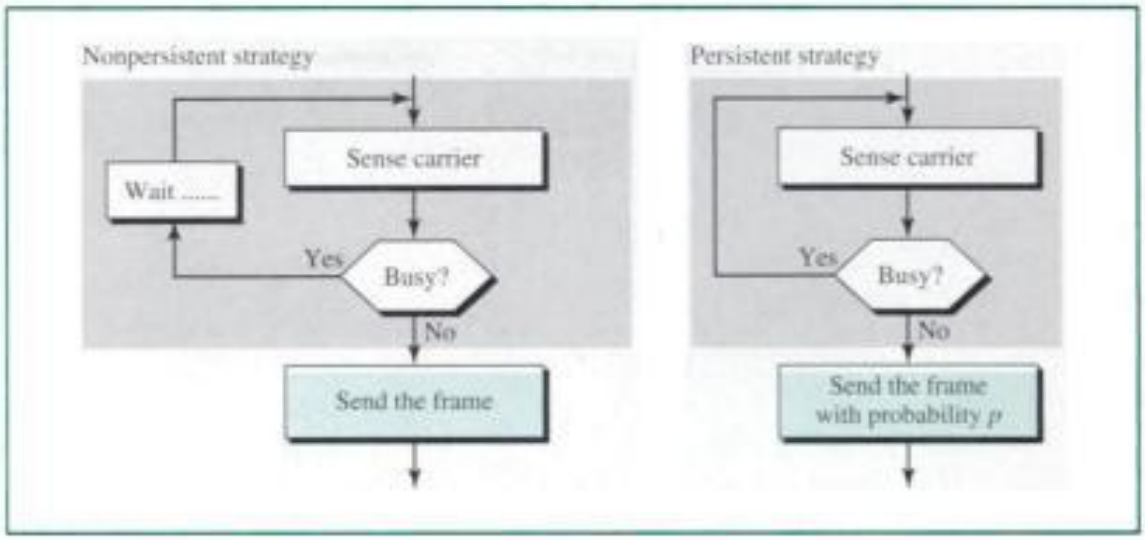

Nonpersistent In a **nonpersistent strategy,** a station that has a frame to send senses the line. If the line is idle, the station sends immediately. If the line is not idle, the station waits a random period of time and then senses the line again. The nonpersistent approach reduces the chance of collision because it is unlikely that two or more stations wait the same amount of time and retry again simultaneously. However, this method reduces the efficiency of the network if the medium is idle when there are stations that have frames to send.

Persistent In a **persistent strategy,** a station senses the line. If the line is idle, the station sends a frame. This method has two variations: **1-persistent** and ***p*-persistent.**

In the 1-persistent method, if the station finds the line idle, the station sends its frame immediately (with a probability of 1). This method increases the chance of collision because two or more stations may send their frames after finding the line idle.

In the *p*-persistent method, if the station finds the line idle, the station may or may not send. It sends with probability p and refrains from sending with probability $1 - p$. For example, if p is 0.2, it means that each station, after sensing an idle line, sends with a probability of 0.2 (20 percent of the time) and refrains from sending with a probability of 0.8 (80 percent of the time). The station generates a random number between 1 and 100. If the random number is less than 20, the station will send; otherwise the station refrains from sending. The *p*-persistent strategy combines the advantages of the other two strategies. It reduces the chance of collision and improves the efficiency.

CSMA/CD

The CSMA method does not define the procedure for a collision. That is the reason CSMA was never implemented. **Carrier sense multiple access with collision detection (CSMA/CD)** adds a procedure to handle a collision.

In this method, any station can send a frame. The station then monitors the medium to see if transmission was successful. If so, the station is finished. If, however, there was a collision, the frame needs to be sent again. To reduce the probability of collision the second time, the station waits—it needs to **back off.** The question is,

Copyrighted material

How much? It is reasonable that the station waits a little the first time, more if a collision occurs again, much more if it happens a third time, and so on.

In the exponential backoff method, the station waits an amount of time between 0 and $2^N \times$ maximum_propagation_time (the time needed for a bit to reach the end of the network), where N is the number of attempted transmissions. In other words, it waits between 0 and $2 \times$ (maximum_propagation_time) for the first time, between 0 and $2^2 \times$ (maximum_propagation_time) for the second time, and so on. Figure 13.7 shows the procedure for CSMA/CD.

Figure 13.7 *CSMA/CD procedure*

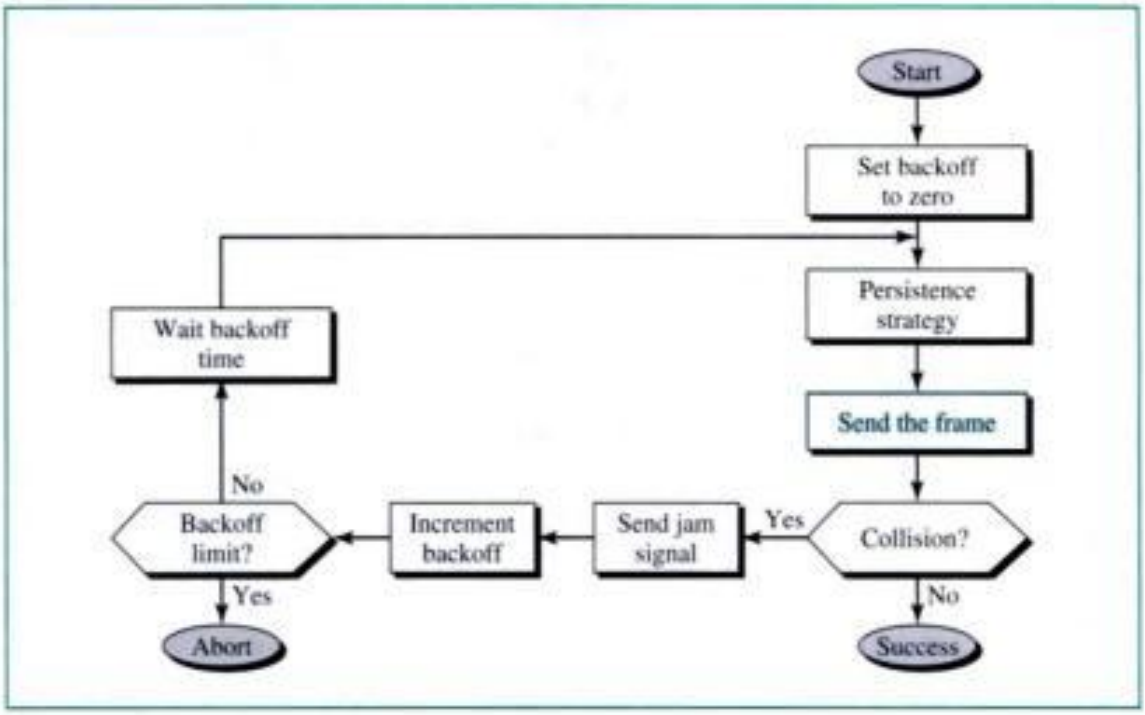

The station that has a frame to send sets the backoff parameter N to zero. It then senses the line using one of the persistence strategies. After sending the frame, if it does not hear a collision until the whole frame has been sent, the transmission is successful. However, if the station hears a collision, it sends a jam signal to the line to inform other stations of the situation and to alert them that a collision has occurred; all stations discard the part of the frame received. The station then increments the value of the backoff parameter by 1. It checks to see if the value of the backoff parameter exceeds the limit (usually 15). If this value exceeds the limit, it means that the station has tried enough and should give up the attempt; the station should abort the procedure. If the value has not exceeded the limit, the station waits a random backoff time based on the current value of the backoff parameter and senses the line again. CSMA/CD is used in traditional Ethernet (discussed in Chapter 14).

CSMA/CA

The CSMA/CA procedure differs from the previous procedures in that there is no collision. The procedure avoids collision (see Fig. 13.8). The station uses one of the

Copyrighted material

Figure 13.8 *CSMA/CA procedure*

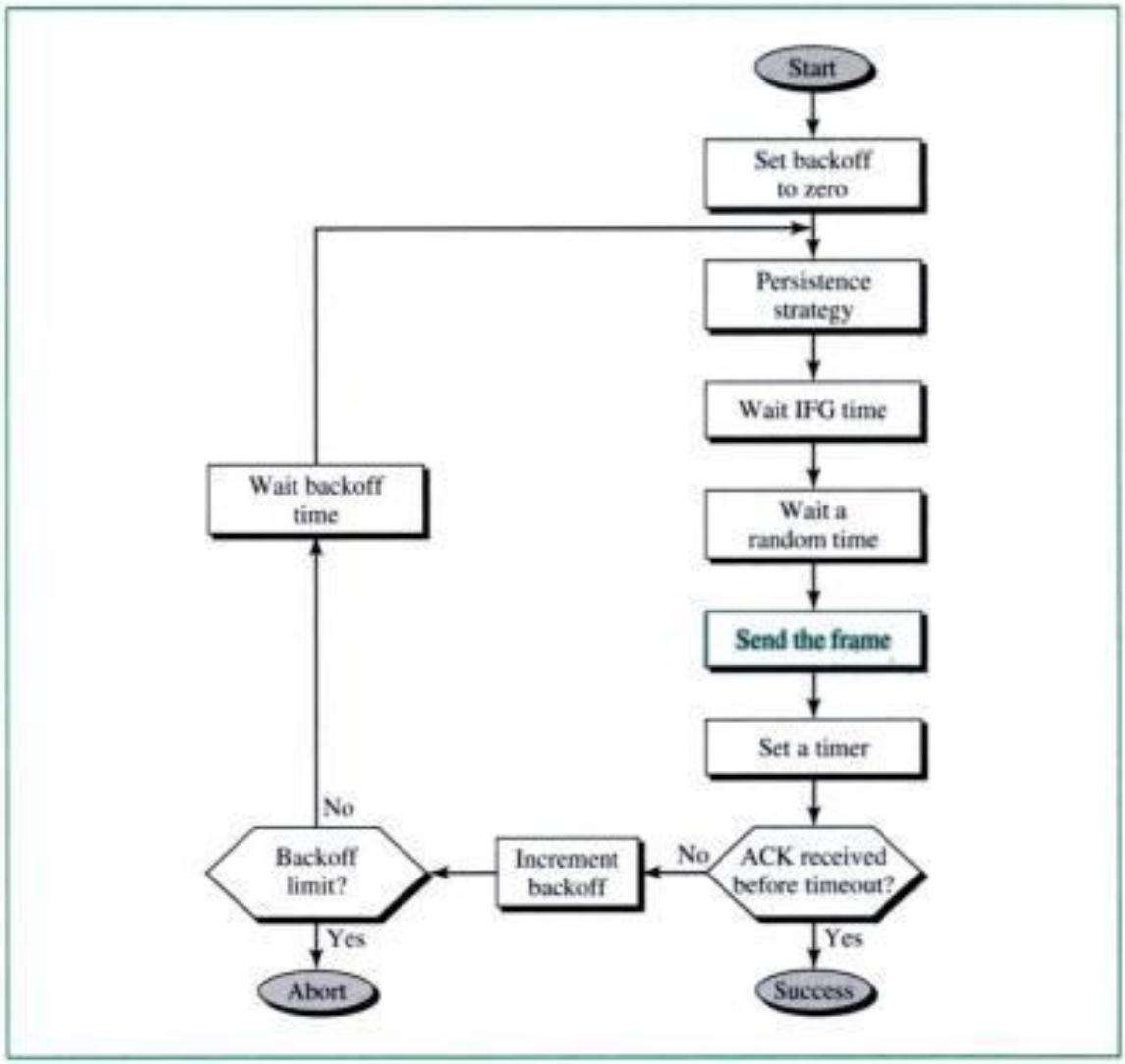

persistence strategies. After it finds the line idle, the station waits an IFG (interframe gap) amount of time. It then waits another random amount of time. After that, it sends the frame and sets a timer. The station waits for an acknowledgment from the receiver. If it receives the acknowledgment before the timer expires, the transmission is successful. If the station does not receive an acknowledgment, it knows that something is wrong (the frame is lost or the acknowledgment is lost). The station increments the value of the backoff parameter, waits for a backoff amount of time, and resenses the line. CSMA/CA is used in wireless LANs (see Chapter 15).

13.2 CONTROLLED ACCESS

In **controlled access,** the stations consult one another to find which station has the right to send. A station cannot send unless it has been authorized by other stations. We discuss three popular controlled-access methods.

Copyrighted material

Reservation

In the reservation access method, a station needs to make a reservation before sending data. Time is divided into intervals. In each interval, a reservation frame precedes the data frames sent in that interval.

If there are N stations in the system, there are exactly N reservation minislots in the reservation frame. Each minislot belongs to a station. When a station needs to send a data frame, it makes a reservation in its own minislot. The stations that have made reservations can send their data frames after the reservation frame.

Figure 13.9 shows a situation with five stations and a five-minislot reservation frame. In the first interval, only stations 1, 3, and 4 have made reservations. In the second interval, only station 1 has made a reservation.

Figure 13.9 *Reservation access method*

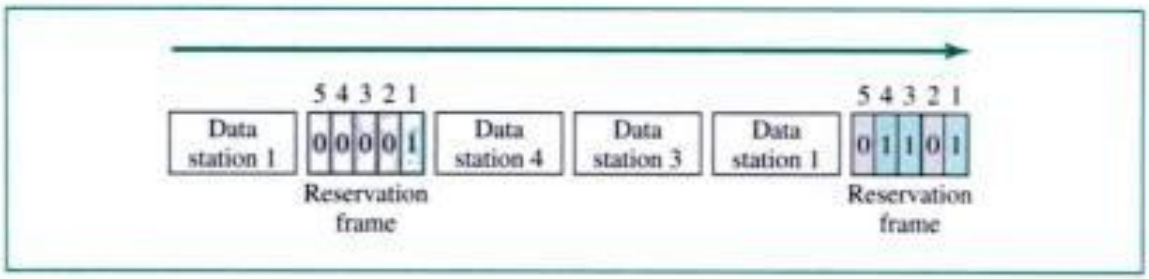

Polling

Polling works with topologies in which one device is designated as a **primary station** and the other devices are **secondary stations.** All data exchanges must be made through the primary device even when the ultimate destination is a secondary device. The primary device controls the link; the secondary devices follow its instructions. It is up to the primary device to determine which device is allowed to use the channel at a given time. The primary device, therefore, is always the initiator of a session. If the primary wants to receive data, it asks the secondaries if they have anything to send; this function is called **polling.** If the primary device wants to send data, it tells the secondary target to get ready to receive; this function is called selecting.

Select

The **select mode** is used whenever the primary device has something to send. Remember that the primary controls the link. If the primary is neither sending nor receiving data, it knows the link is available. If it has something to send, the primary device sends it. What it does not know, however, is whether the target device is prepared to receive. So the primary must alert the secondary to the upcoming transmission and wait for an acknowledgment of the secondary's ready status. Before sending data, the primary creates and transmits a select (SEL) frame, one field of which includes the address of the intended secondary. See Figure 13.10.

Poll

The polling function is used by the primary device to solicit transmissions from the secondary devices. Figure 13.11 shows the situation.

Copyrighted material

Figure 13.10 *Select*

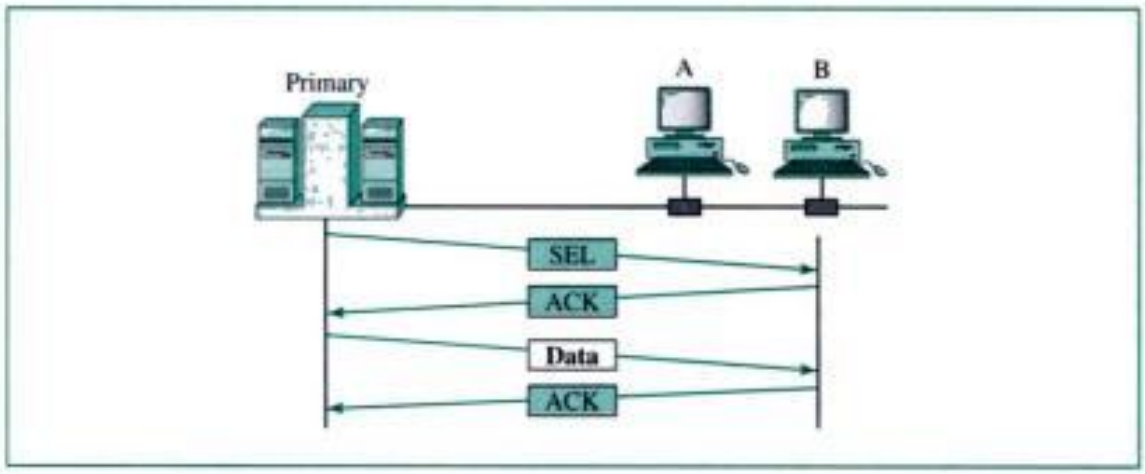

Figure 13.11 *Poll*

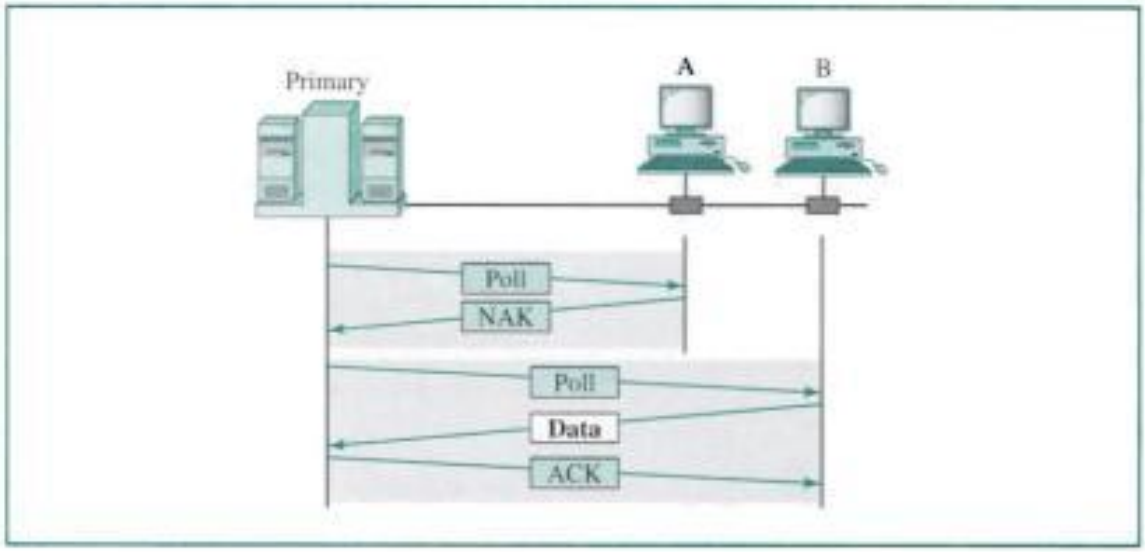

When the primary is ready to receive data, it must ask (poll) each device in turn if it has anything to send. When the first secondary is approached, it responds either with a NAK frame if it has nothing to send or with data (in the form of a data frame) if it does. If the response is negative (a NAK frame), the primary then polls the next secondary in the same manner until it finds one with data to send. When the response is positive (a data frame), the primary reads the frame and returns an acknowledgment (ACK frame), verifying its receipt.

Token Passing

In the **token-passing** method, a station is authorized to send data when it receives a special frame called a token. In this method, stations are arranged around a ring. Each station has a predecessor and a successor. Frames are coming from the predecessor and going to the successor. Figure 13.12 shows the idea.

Copyrighted material

Figure 13.12 *Token-passing network*

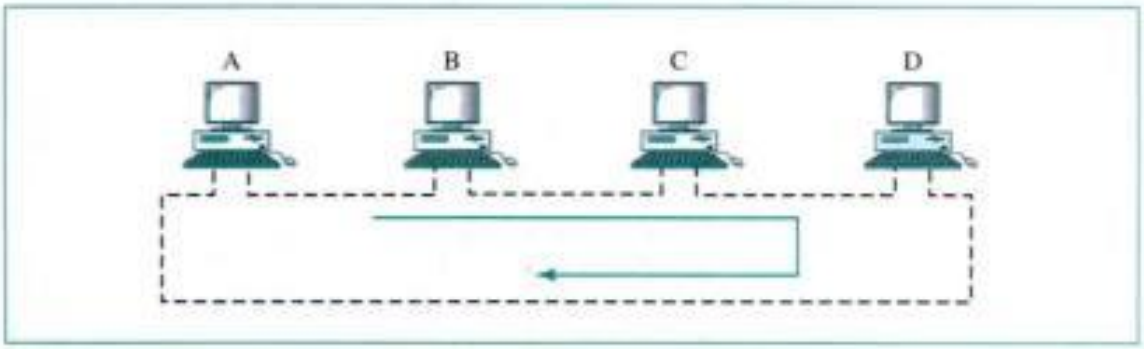

When no data are being sent, a token circulates around the ring. If a station needs to send data, it waits for the token. The station captures the token and sends one or more frames (as long as it has frames to send or the allocated time has not expired), and finally it releases the token to be used by the successor station (the next station on the physical or logical ring). Figure 13.13 shows a very simplified procedure for token passing. In reality, other features (such as priority and reservation) are added to the process.

Figure 13.13 *Token-passing procedure*

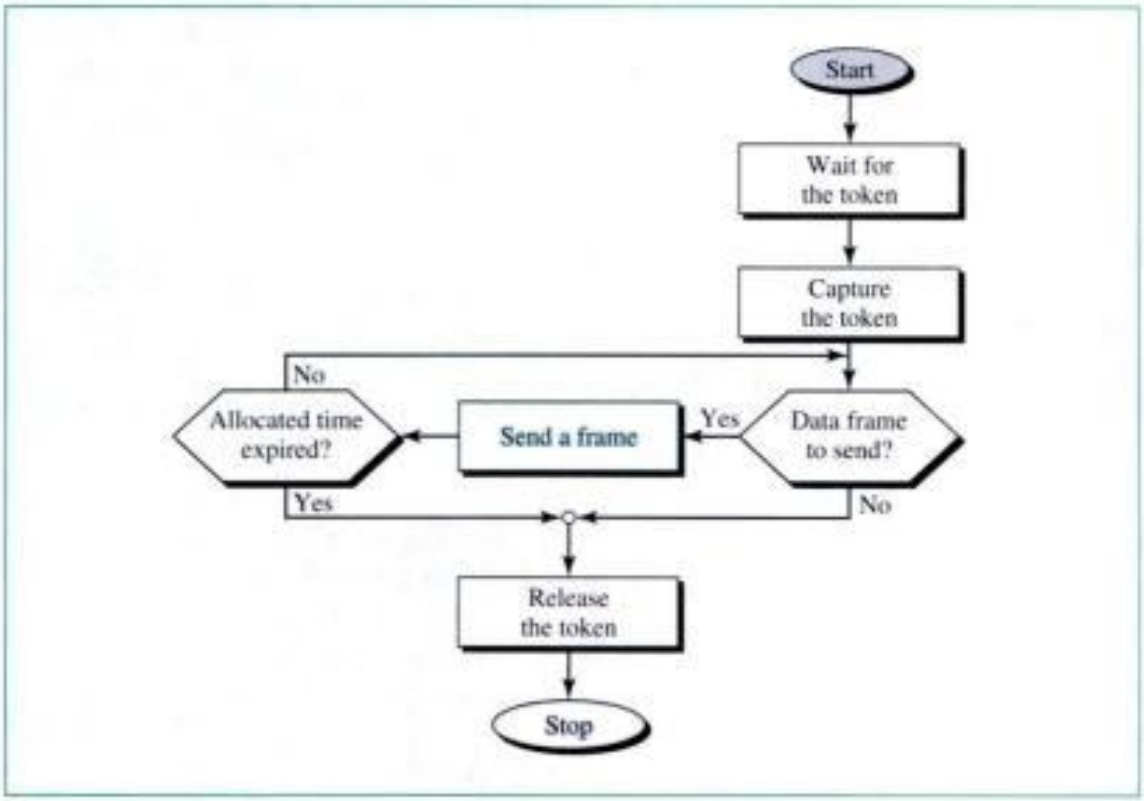

13.3 CHANNELIZATION

Channelization is a multiple-access method in which the available bandwidth of a link is shared in time, frequency, or through code, between different stations. In this section, we discuss three channelization protocols: FDMA, TDMA, and CDMA. The first two

Copyrighted material

are related to procedures previously discussed in the physical layer. CDMA is a data link multiple-access protocol.

FDMA

In **frequency-division multiple access (FDMA),** the available bandwidth is shared by all stations. Each station uses its allocated band to send its data. Each band is reserved for a specific station. The band belongs to the station all the time. FDMA is a data link layer protocol that uses FDM at the physical layer (see Chapter 6). We will see how FDMA is used in cellular telephone and satellite networks in Chapter 17.

In FDMA, the bandwidth is divided into channels.

TDMA

In **time-division multiple access (TDMA),** the entire bandwidth is just one channel. The stations share the capacity of the channel in time. Each station is allocated a time slot during which it can send data. TDMA is a data link layer protocol that uses TDM at the physical layer (see Chapter 6). We will see how TDMA is used in the cellular telephone network in Chapter 17.

In TDMA, the bandwidth is just one channel that is timeshared.

CDMA

Code-division multiple access (CDMA) was conceived several decades ago. Recent advances in electronic technology have finally made its implementation possible. CDMA differs from FDMA because only one channel occupies the entire bandwidth of the link. It differs from TDMA because all stations can send data simultaneously; there is no timesharing.

In CDMA, one channel carries all transmissions simultaneously.

CDMA is based on coding theory. Each station is assigned a code, which is a sequence of numbers called **chips.** Suppose we have four stations; each has a sequence of chips which we designate as A, B, C, and D (see Fig. 13.14). Later in this chapter we show how we chose these sequences.

Figure 13.14 *Chip sequences*

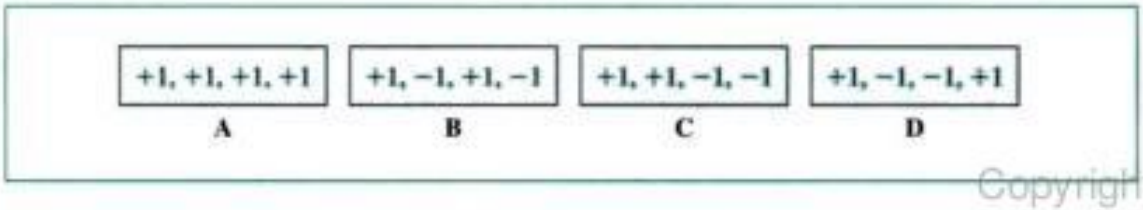

Copyrighted material

We follow these rules for encoding: If a station needs to send a 0 bit, it sends a −1; if it needs to send a 1 bit, it sends a +1. When a station is idle, it sends no signal, which is represented by a 0. These are shown in Figure 13.15.

Figure 13.15 *Encoding rules*

As a simple example, we show how four stations share the link during 1-bit interval. The procedure can easily be repeated for additional intervals. We assume that stations 1 and 2 are sending a 0 bit and channel 4 is sending a 1 bit. Station 3 is silent.

Multiplexer

Figure 13.16 shows the situation at the multiplexer. The steps are as follows:

Figure 13.16 *CDMA multiplexer*

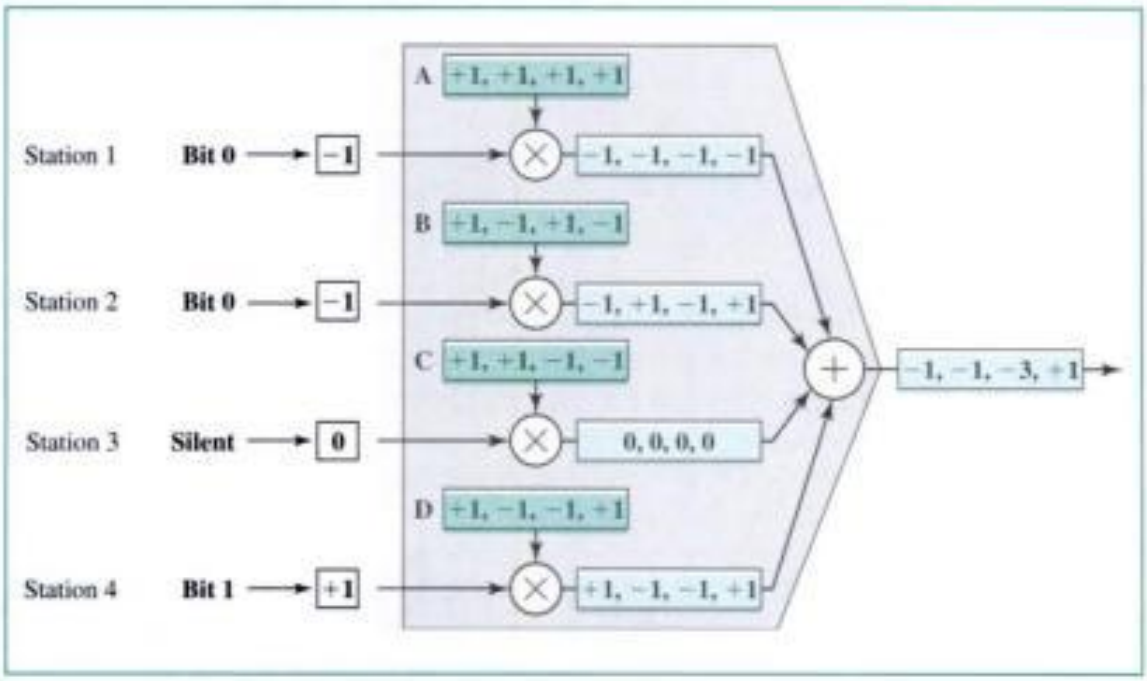

1. The multiplexer receives one encoded number from each station (−1, −1, 0, and +1).
2. The encoded number sent by station 1 is multiplied by each chip in sequence A. A new sequence is the result (−1, −1, −1, −1). Likewise, the encoded number sent by station 2 is multiplied by each chip in sequence B. The same is true for the remaining two encoded numbers. The result is four new sequences.
3. All first chips are added, as are all second, third, and fourth chips. The result is one new sequence.
4. The sequence is transmitted through the link.

Copyrighted material

Demultiplexer

Figure 13.17 shows the situation at the demultiplexer. The steps are as follows:

Figure 13.17 *CDMA demultiplexer*

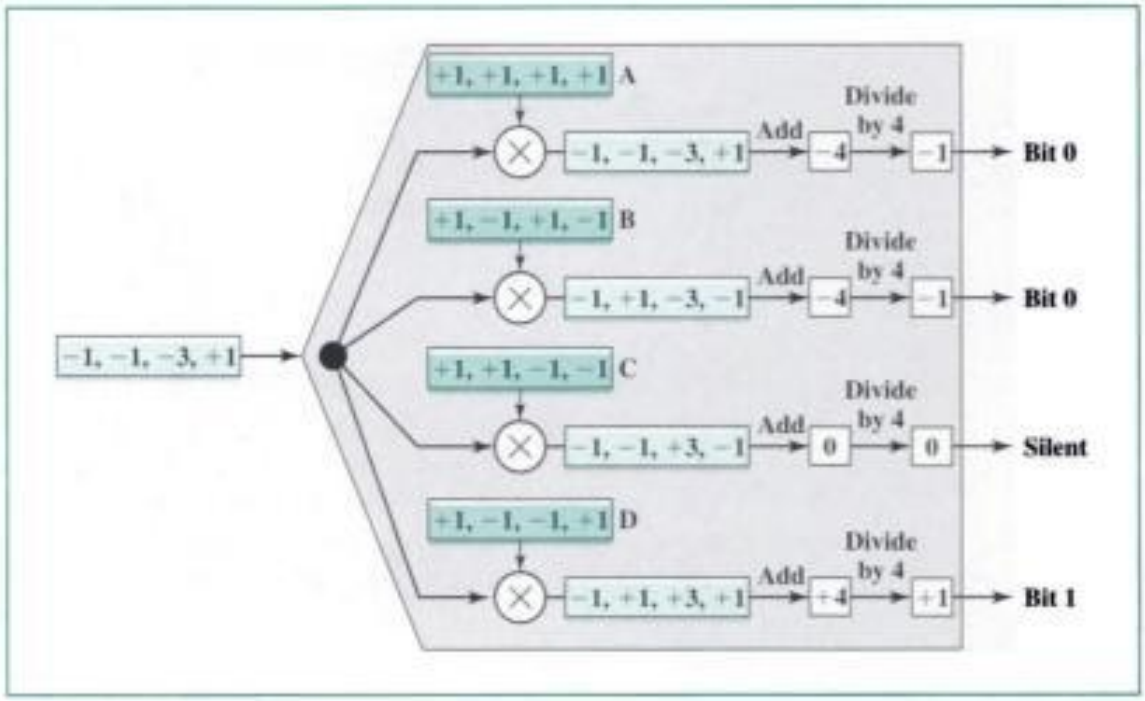

1. The demultiplexer receives the sequence sent across the link.
2. It multiplies the sequence by the code for each receiver. The multiplication is done chip by chip.
3. The chips in each sequence are added. The result is always +4, −4, or 0.
4. The result of step 3 is divided by 4 to get −1, +1, or 0.
5. The number in step 4 is decoded to 0, 1, or silence by the receiver.

Observation

We see that each station receives what is sent by the sender. Note that the third receiver does not receive data because the sender was idle. There is only one sequence flowing through the channel, the sum of the sequences. However, each receiver detects its own data from the sum.

Orthogonal Sequences Let us return to the chip sequences. We did not choose the sequences randomly; they were carefully selected. The sequences in our example are called **orthogonal sequences.** We show how to generate orthogonal sequences, and then we discuss their properties.

Sequence Generation To generate sequences, we use a **Walsh table,** a two-dimensional table with an equal number of rows and columns. Each row is a sequence of chips. The Walsh table W_1 for a one-chip sequence has one row and one column. We can choose −1 or +1 for the chip for this trivial table (we chose +1). According to Walsh, if we

Copyrighted material

know the table for N sequences W_N, we can create the table for $2N$ sequences W_{2N}, as shown in Figure 13.18. The W_N with the overhead bar stands for the complement of W_N, where each +1 is changed to −1 and vice versa.

Figure 13.18 *W_1 and W_{2N}*

$$W_1 = \begin{bmatrix} +1 \end{bmatrix} \qquad W_{2N} = \begin{bmatrix} W_N & W_N \\ W_N & \overline{W_N} \end{bmatrix}$$

Let us see how we can create W_2 and W_4 from W_1. Figure 13.19 shows the process. After we select W_1, W_2 can be made from four W_1's, with the last one the complement of W_1. After W_2 is generated, W_4 can be made of four W_2's, with the last one the complement of W_2. Of course, W_8 is composed of four W_4's, and so on. According to the tables, the sequences for two stations accessing one link are +1, +1 and +1, −1. The sequences for four stations are like those used in our example (see Fig. 13.16).

Figure 13.19 *Sequence generation*

$$W_1 = \begin{bmatrix} +1 \end{bmatrix} \qquad W_2 = \begin{bmatrix} +1 & +1 \\ +1 & -1 \end{bmatrix} \qquad W_4 = \begin{bmatrix} +1 & +1 & +1 & +1 \\ +1 & -1 & +1 & -1 \\ +1 & +1 & -1 & -1 \\ +1 & -1 & -1 & +1 \end{bmatrix}$$

Properties of Orthogonal Sequences Orthogonal sequences have properties that are suitable for CDMA. They are as follows:

1. If we multiply a sequence by −1, every element in the sequence is complemented (+1 becomes −1 and −1 becomes +1). We can see that when a station is sending −1 (bit 0), it is sending its complement.
2. If we multiply two sequences, element by element, and add the results, we get a number called the **inner product.** If the two sequences are the same, we get N, where N is the number of sequences; if they are different, we get 0. The inner product uses a dot as the operator. So $A \cdot A$ is N, but $A \cdot B$ is 0.
3. The inner product of a sequence by its complement is $-N$. So $A \cdot (-A)$ is $-N$.

Example 1

Check to see if the second property about orthogonal codes holds for our CDMA example.

Copyrighted material

Solution

The inner product of each code by itself is N. This is shown for code C; you can prove for yourself that it holds true for the other codes.

$$C \cdot C = [+1, +1, -1, -1] \cdot [+1, +1, -1, -1] = 1 + 1 + 1 + 1 = 4$$

If two sequences are different, the inner product is 0.

$$B \cdot C = [+1, -1, +1, -1] \cdot [+1, +1, -1, -1] = 1 - 1 - 1 + 1 = 0$$

Example 2

Check to see if the third property about orthogonal codes holds for our CDMA example.

Solution

The inner product of each code by its complement is $-N$. This is shown for code C; you can prove for yourself that it holds true for the other codes.

$$C \cdot (-C) = [+1, +1, -1, -1] \cdot [-1, -1, +1, +1] = -1 - 1 - 1 - 1 = -4$$

The inner product of a code with the complement of another code is 0.

$$B \cdot (-C) = [+1, -1, +1, -1] \cdot [-1, -1, +1, +1] = -1 + 1 + 1 - 1 = 0$$

Orthogonal Codes in CDMA

Now we can understand why our trivial example of CDMA works.

In the Multiplexer In the multiplexer, each station is sending the appropriate sequence:

- Station 1 is sending $-A$ (-1 was multiplied by A), station 2 is sending $-B$, station 3 is sending an empty sequence (all zeros), and station 4 is sending D.
- The sequence that comes out of the multiplexer is the sum of all sequences.

$$S = -A - B + D$$

In the Demultiplexer In the demultiplexer, all stations receive S:

- Station 1 finds the inner product of S and A.

$$S \cdot A = (-A - B + D) \cdot A = -A \cdot A - B \cdot A + D \cdot A = -4 + 0 + 0 = -4$$

  The result is then divided by 4, which is -1. This is interpreted as a 0 bit.
- Station 2 finds the inner product of S and B.

$$S \cdot B = (-A - B + D) \cdot B = -A \cdot B - B \cdot B + D \cdot B = 0 - 4 + 0 = -4$$

  The result is then divided by 4, which is -1. This is interpreted as a 0 bit.
- Station 3 finds the inner product of S and C.

$$S \cdot C = (-A - B + D) \cdot C = -A \cdot C - B \cdot C + D \cdot C = 0 + 0 + 0 = 0$$

  This is interpreted as a silent station.
- Station 4 finds the inner product of S and D.

$$S \cdot D = (-A - B + D) \cdot D = -A \cdot D - B \cdot D + D \cdot D = 0 + 0 + 4 = 4$$

  The result is then divided by 4, which is $+1$. This is interpreted as a 1 bit.

Copyrighted material

13.4 KEY TERMS

1-persistent strategy
ALOHA
back off
carrier sense multiple access (CSMA)
carrier sense multiple access/collision avoidance (CSMA/CA)
carrier sense multiple access/collision detection (CSMA/CD)
channelization
chip
code-division multiple access (CDMA)
collision
controlled access
frequency-division multiple access (FDMA)
inner product
multiple access (MA)
nonpersistent strategy
orthogonal sequence
persistence strategy
poll mode
polling
p-persistent strategy
primary station
random access
reservation
secondary station
select mode
time-division multiple access (TDMA)
token passing
Walsh table

13.5 SUMMARY

- Medium access methods can be categorized as random, controlled, or channelized.
- In the carrier sense multiple-access (CSMA) method, a station must listen to the medium prior to sending data onto the line.
- A persistence strategy defines the procedure to follow when a station senses an occupied medium.
- Carrier sense multiple access with collision detection (CSMA/CD) is CSMA with a postcollision procedure.
- Carrier sense multiple access with collision avoidance (CSMA/CA) is CSMA with procedures that avoid a collision.
- Reservation, polling, and token passing are controlled-access methods.
- In the reservation access method, a station reserves a slot for data by setting its flag in a reservation frame.
- In the polling access method, a primary station controls transmissions to and from secondary stations.
- In the token-passing access method, a station that has control of a frame called a token can send data.
- Channelization is a multiple-access method in which the available bandwidth of a link is shared in time, frequency, or through code, between stations on a network.
- FDMA, TDMA, and CDMA are channelization methods.

Copyrighted material

- In FDMA, the bandwidth is divided into bands; each band is reserved for the use of a specific station.
- In TDMA, the bandwidth is not divided into bands; instead the bandwidth is timeshared.
- In CDMA, the bandwidth is not divided into bands, yet data from all inputs are transmitted simultaneously.
- CDMA is based on coding theory and uses sequences of numbers called chips. The sequences are generated using Walsh tables.

13.6 PRACTICE SET

Review Questions

1. What is the advantage of controlled access over random access?
2. List in order the protocols that evolved from MA.
3. When do we increment the backoff in a network that uses ALOHA?
4. How do the two persistent strategies differ?
5. What is the purpose of the jam signal in CSMA/CD?
6. How does CSMA/CD differ from CSMA/CA?
7. Name three popular controlled-access methods.
8. Is the reservation access method suitable for a very large network in which many stations are idle? Why or why not?
9. Discuss the difference between polling and selecting.
10. Why is token passing a controlled-access procedure?
11. Name three channelization protocols.
12. Discuss the number of bands per medium bandwidth for FDMA, TDMA, and CDMA.
13. How is CDMA superior to FDMA? How is CDMA superior to TDMA?
14. What is a collision?
15. What is an inner product?

Multiple-Choice Questions

16. The most primitive random access method is _____.
    a. ALOHA
    b. CSMA
    c. Channelization
    d. Token passing
17. In the _____ random-access method there is no collision.
    a. ALOHA
    b. CSMA/CD
    c. CSMA/CA
    d. Token-passing

Copyrighted material

18. In the _____ random-access method, stations do not sense the medium.
    a. ALOHA
    b. CSMA/CD
    c. CSMA/CA
    d. Ethernet
19. In the 1-persistent approach, when a station finds an idle line, it _____.
    a. Waits 0.1 s before sending
    b. Waits 1 s before sending
    c. Waits a time equal to $1 - p$ before sending
    d. Sends immediately
20. In the p-persistent approach, when a station finds an idle line, it _____.
    a. Waits 1 s before sending
    b. Sends with probability $1 - p$
    c. Sends with probability p
    d. Sends immediately
21. A network using the CSMA random-access method with p equal to 0.25 will send _____ percent of the time after accessing an idle line.
    a. 25
    b. 50
    c. 75
    d. 100
22. The 1-persistent approach can be considered a special case of the p-persistent approach with p equal to _____.
    a. 0.1
    b. 0.5
    c. 1.0
    d. 2.0
23. _____ is a random-access protocol.
    a. MA
    b. Polling
    c. FDMA
    d. CDMA
24. _____ is a controlled-access protocol.
    a. Reservation
    b. FDMA
    c. TDMA
    d. CSMA
25. _____ is (are) a channelization protocol.
    a. FDMA
    b. TDMA

Copyrighted material

c. CDMA
d. All the above

26. _____ is the access protocol used by traditional Ethernet.
a. CSMA
b. CSMA/CD
c. CSMA/CA
d. Token ring

27. When a collision is detected in a network using CSMA/CD, _____.
a. The frame is immediately resent
b. A jam signal is sent by the station
c. The backoff value is set to 0
d. The backoff value is decremented by 1

28. In the reservation access method, if there are 10 stations on a network, then there are _____ reservation minislots in the reservation frame.
a. 5
b. 9
c. 10
d. 11

29. _____ requires one primary station and one or more secondary stations.
a. Reservation
b. Polling
c. Token ring
d. CSMA

30. When a primary device asks a secondary device if it has data to send, this is called _____.
a. Polling
b. Selecting
c. Reserving
d. Backing off

31. If an FDMA network has eight stations, the medium bandwidth has _____ bands.
a. 1
b. 2
c. 8
d. 16

32. If a TDMA network has eight stations, the medium bandwidth has _____ bands.
a. 1
b. 2
c. 8
d. 16

Copyrighted material

33. If a CDMA network has eight stations, the medium bandwidth has _____ bands.
    a. 1
    b. 2
    c. 8
    d. 16
34. A Walsh table for 16 stations has a chip sequence of _____ chips.
    a. 4
    b. 8
    c. 16
    d. 32

Exercises

35. Explain how the ALOHA protocol answers this question: When should the station access the medium?
36. Explain how the ALOHA protocol answers this question: What should be done if the medium is busy?
37. Explain how the ALOHA protocol answers this question: How should the station determine the success or failure of the transmission?
38. Explain how the ALOHA protocol answers this question: What should the station do if there is an access conflict?
39. Explain how the CSMA/CD protocol answers this question: When should the station access the medium?
40. Explain how the CSMA/CD protocol answers this question: What should be done if the medium is busy?
41. Explain how the CSMA/CD protocol answers this question: How should the station determine the success or failure of the transmission?
42. Explain how the CSMA/CD protocol answers this question: What should the station do if there is an access conflict?
43. Explain how the CSMA/CA protocol answers this question: When should the station access the medium?
44. Explain how the CSMA/CA protocol answers this question: What should be done if the medium is busy?
45. Explain how the CSMA/CA protocol answers this question: How should the station determine the success or failure of the transmission?
46. Explain how the CSMA/CA protocol answers this question: What should the station do if there is an access conflict?
47. Explain how the token-passing protocol answers this question: When should the station access the medium?
48. Explain how the token-passing protocol answers this question: What should be done if the medium is busy?
49. Explain how the token-passing protocol answers this question: How should the station determine the success or failure of the transmission?

Copyrighted material

50. Explain how the token-passing protocol answers this question: What should the station do if there is an access conflict?
51. Complete Table 13.1 for the different protocols discussed in this chapter. Answer yes or no.

Table 13.1 *Exercise 51*

Characteristic	*ALOHA*	*CSMA/CD*	*CSMA/CA*	*Token Passing*	*Channel-ization*
Multiple access					
Carrier sense					
Collision checking					
Acknowledgment					

52. Show the Walsh table for W_{16}.
53. Prove the second property of orthogonal sequences for any two entries of your choice in W_{16}.
54. Prove the third property of orthogonal sequences for any two entries of your choice in W_{16}.
55. Show the output of multiplexer in Figure 13.16 if station 1 is silent and every other station is sending a 1 bit.
56. Redraw Figure 13.17 for Problem 55.

Copyrighted material

Copyrighted material

CHAPTER 14

Local Area Networks: Ethernet

In Chapter 1, we learned that a local area network (LAN) is a computer network that is designed for a limited geographic area such as a building or a campus. Although a LAN can be used as an isolated network to connect computers in an organization for the sole purpose of sharing resources, most LANs today are also links in a wide area network (WAN) or the Internet.

The LAN market has seen several technologies, but the most dominant today is **Ethernet.** In this chapter, we concentrate on Ethernet; in Chapter 15 we discuss wireless LANs.

Figure 14.1 compares three generations of Ethernet.

Figure 14.1 *Three generations of Ethernet*

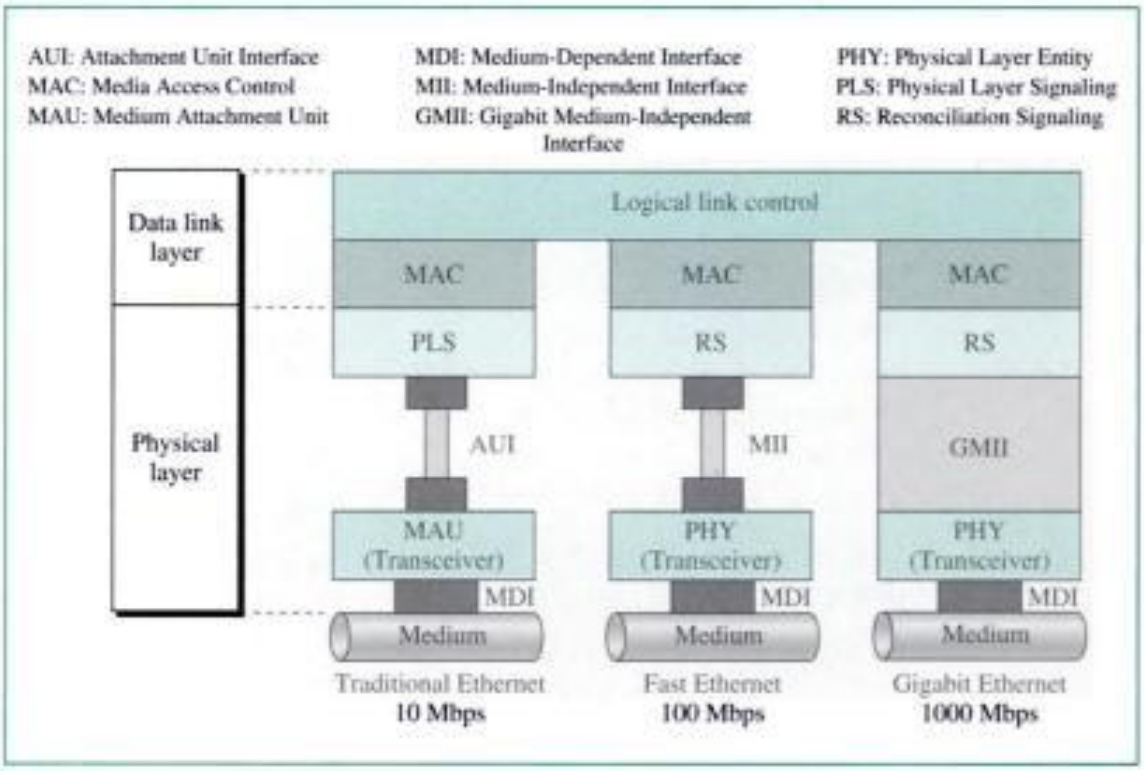

Copyrighted material

The original Ethernet was created in 1976 at Xerox's Palo Alto Research Center (PARC). Since then, it has evolved. We designate the original, with a data rate of 10 Mbps, as traditional Ethernet. Fast Ethernet operates at 100 Mbps; Gigabit Ethernet at 1 Gbps.

A computer connected via a LAN to the Internet needs all five layers of the Internet model. The three upper layers (network, transport, and application) are common to all LANs. The data link layer is divided into the logical link control (LLC) sublayer and the medium access control (MAC) sublayer. The LLC sublayer was originally designed to be the same for all LANs for interoperability, but it is not used often today. Instead, the interoperability is provided by a common network layer protocol, as we will see in a future chapter. This means that local area networks differ only in their MAC sublayers and in their physical layers. While the MAC sublayer is slightly different for each Ethernet version, the physical layer is quite different.

14.1 TRADITIONAL ETHERNET

Traditional Ethernet was designed to operate at 10 Mbps. Access to the network by a device is through a contention method (CSMA/CD). The media are shared between all stations.

MAC Sublayer

The **MAC sublayer** governs the operation of the access method. It also frames data received from the upper layer and passes them to the PLS sublayer for encoding.

Access Method: CSMA/CD

Traditional Ethernet uses 1-persistent CSMA/CD as the access method. Access methods are discussed in Chapter 13.

Frame

The Ethernet frame contains seven fields: preamble, SFD, DA, SA, length/type of protocol data unit (PDU), upper layer data, and the CRC. Ethernet does not provide any mechanism for acknowledging received frames, making it what is known as an unreliable medium. Acknowledgments must be implemented at the higher layers. The format of the MAC frame is shown in Figure 14.2.

Figure 14.2 *802.3 MAC frame*

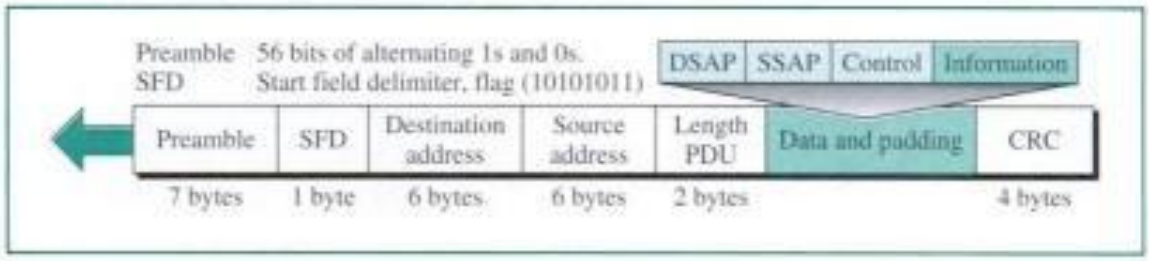

Copyrighted material

- **Preamble.** The first field of the 802.3 frame contains 7 bytes (56 bits) of alternating 0s and 1s that alert the receiving system to the coming frame and enable it to synchronize its input timing. The pattern provides only an alert and a timing pulse. The 56-bit pattern allows the stations to miss some bits at the beginning of the frame. The **preamble** is actually added at the physical layer and is not (formally) part of the frame.
- **Start frame delimiter (SFD).** The second field (1 byte: 10101011) signals the beginning of the frame. The SFD tells the stations that they have a last chance for synchronization. The last 2 bits are 11 and alert the receiver that the next field is the destination address.
- **Destination address (DA).** The DA field is 6 bytes and contains the physical address of the destination station or stations to receive the packet. We will discuss the destination address in greater detail later.
- **Source address (SA).** The SA field is also 6 bytes and contains the physical address of the sender of the packet. We will discuss the source address in greater detail later.
- **Length/type.** This field is defined as a length or type field. If the value of the field is less than 1518, it is a length field and defines the length of the data field that follows. On the other hand, if the value of this field is greater than 1536, it defines the type of the PDU packet that is encapsulated in the frame.
- **Data.** This field carries data encapsulated from the upper-layer protocols. It is a minimum of 46 and a maximum of 1500 bytes, as we will see later.
- **CRC.** The last field contains the error detection information, in this case a CRC-32.

Frame Length Ethernet has imposed restrictions on both the minimum and maximum length of a frame, as shown in Figure 14.3.

Figure 14.3 *Minimum and maximum length*

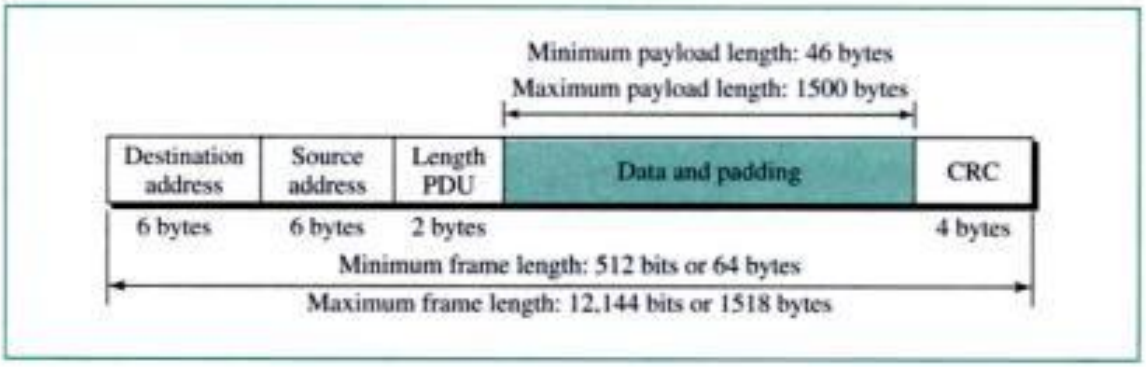

The minimum length restriction is required for the correct operation of CSMA/CD. If there is a collision before the physical layer sends a frame out of a station, it must be heard by all stations. If the entire frame is sent out before a collision is detected, it is too late. The MAC layer has already discarded the frame, thinking that the frame has reached the destination. This situation is aggravated as the frame length diminishes in

Copyrighted material

size since smaller frames are sent out faster. The standard has therefore defined the smallest frame length for every 10-Mbps Ethernet LAN as 512 bits or 64 bytes (without the preamble or SFD field).

An Ethernet frame must therefore have a minimum length of 512 bits or 64 bytes. Part of this length is the header and the trailer. If we count 18 bytes of header and trailer (6 bytes source address, 6 bytes destination address, 2 bytes length/type, and 4 bytes CRC), then the minimum length of data from the upper layer is 64 − 18 = 46 bytes. If the upper-layer packet is less than 46 bytes, padding is added to make up the difference. The standard defines the maximum length of a frame (without preamble and SFD field) as 1518 bytes. If we subtract the 18 bytes of header and trailer, the maximum length of the payload is 1500 bytes. The maximum length restriction is only historical.

Addressing

Each station on an Ethernet network (such as a PC, workstation, or printer) has its own **network interface card (NIC).** The NIC fits inside the station and provides the station with a 6-byte physical address. The Ethernet address is 6 bytes (48 bits) that is normally written in **hexadecimal notation** using a hyphen to separate bytes from each other, as shown in Figure 14.4.

Figure 14.4 *Ethernet addresses in hexadecimal notation*

06-01-02-01-2C-4B

Unicast, Multicast, and Broadcast Addresses A source address is always a **unicast address**—the frame comes from only one station. The destination address, however, can be unicast, **multicast,** or **broadcast.** Figure 14.5 shows how to distinguish a unicast address from a multicast address.

Figure 14.5 *Unicast and multicast addresses*

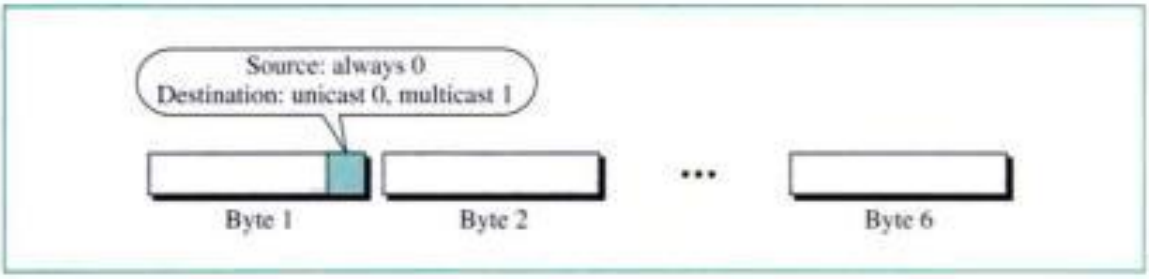

A unicast destination address defines only one recipient; the relationship between the sender and the receiver is one-to-one. A multicast destination address defines a group of addresses; the relationship between the sender and the receiver is one-to-many.

Copyrighted material

The broadcast address is a special case of the multicast address; the recipients are all the stations on the network. A destination broadcast address is forty-eight 1s.

Physical Layer

Figure 14.6 shows the physical layer for 10-Mbps Ethernet.

Figure 14.6 *Physical layer*

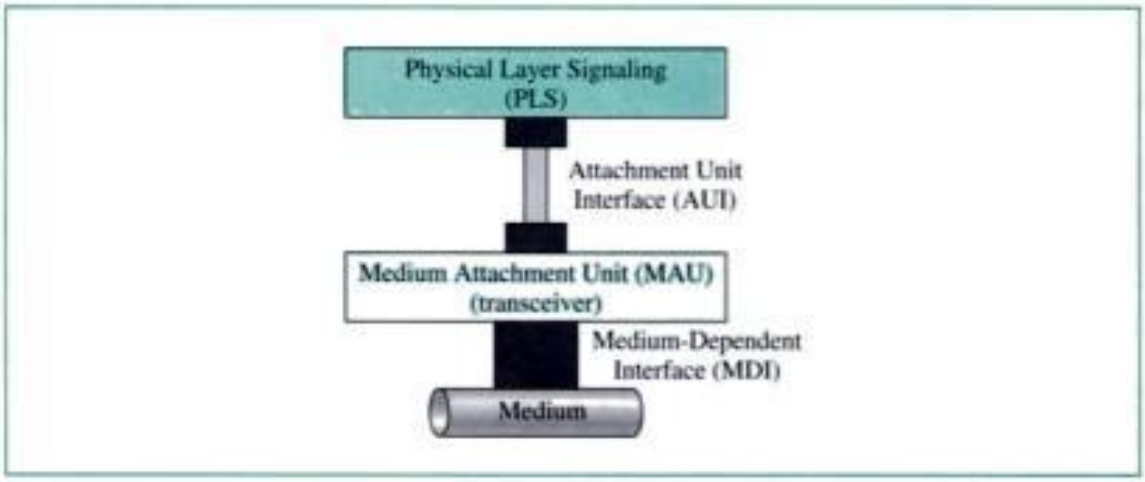

PLS

The **PLS sublayer** encodes and decodes data. Traditional Ethernet uses Manchester encoding (see Chapter 4) with a data rate of 10 Mbps. Note that for this data rate a bandwidth of 20 Mbaud is needed. Figure 14.7 shows the functions of the PLS sublayer.

Figure 14.7 *PLS*

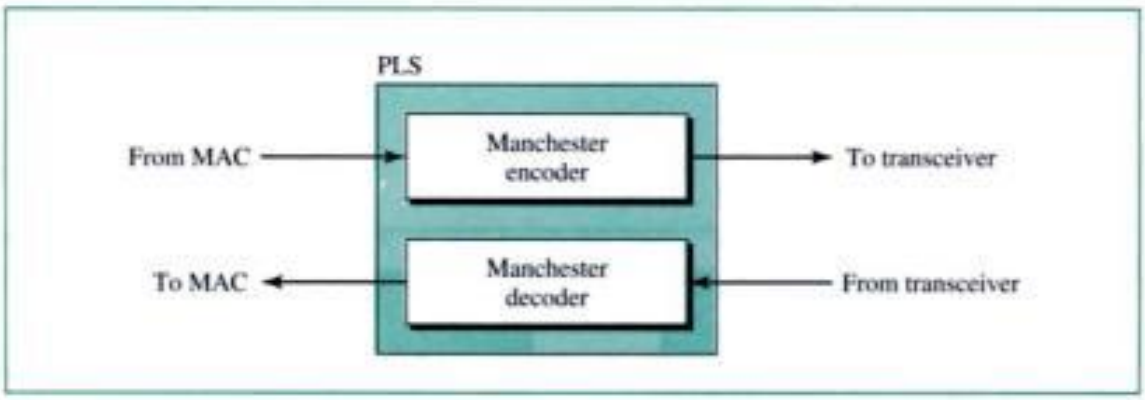

AUI

The **attachment unit interface (AUI)** is a specification that defines the interface between the PLS and MAU. The AUI was developed to create a kind of *medium-independent interface* between the PLS and the MAU. The interface was designed for the first implementation of Ethernet, which used thick coaxial cable. The whole idea was

Copyrighted material

that if in the future we want to connect the PLS sublayer to a different MAU (using a different medium), we do not have to change the PLS. Figure 14.8 shows the AUI, AUI cable, and connector.

Figure 14.8 *AUI*

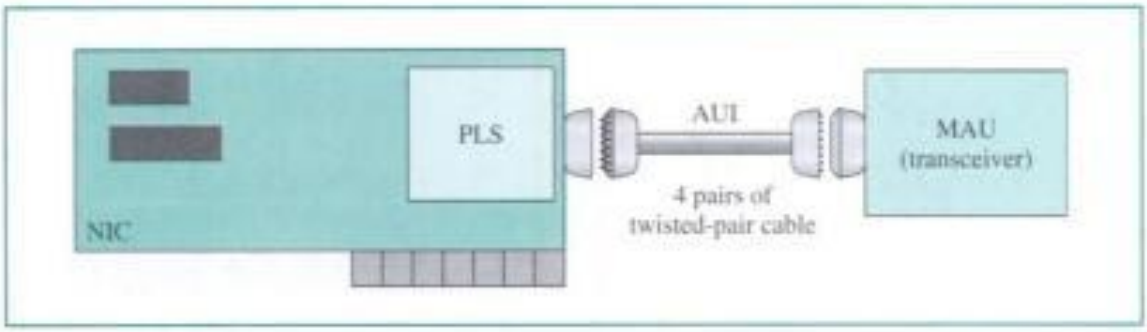

MAU (Transceiver)

The **medium attachment unit (MAU),** or transceiver, is medium-dependent. It creates the appropriate signal for each particular medium. There is a MAU for each type of medium used in 10-Mbps Ethernet. The coaxial cable needs its own type of MAU, the twisted-pair medium needs a twisted-pair MAU, and fiber-optic cable needs a fiber-optic MAU.

The **transceiver** is a transmitter and a receiver. It transmits signals over the medium; it receives signals over the medium; it also detects collisions. Figure 14.9 shows the position and functions of a transceiver.

Figure 14.9 *MAU (transceiver)*

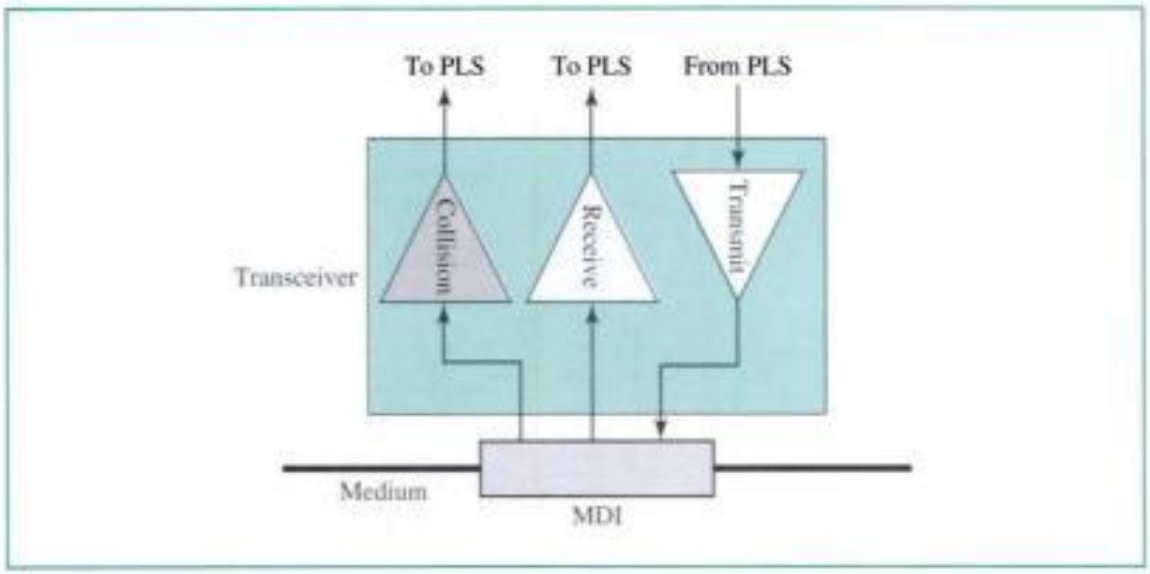

A transceiver can be external or internal. An external transceiver is installed close to the media and is connected via an AUI to the station. An internal transceiver is installed inside the station (on the interface card) and does not need an AUI cable.

Copyrighted material

MDI

To connect the transceiver (internal or external) to the medium, we need a **medium-dependent interface (MDI).** The MDI is just a piece of hardware for connecting a transceiver to the medium. For an external transceiver, it can be a tap or a tee connector. For an internal transceiver, it can be a jack.

Physical Layer Implementation

The standard defines four different implementations for baseband (digital), 10-Mbps Ethernet, as shown in Figure 14.10. We discuss each implementation separately.

Figure 14.10 *Categories of traditional Ethernet*

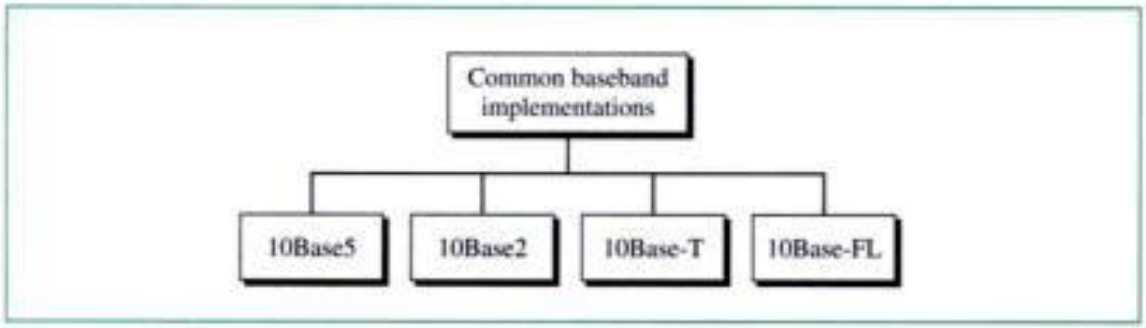

10Base5: Thick Ethernet

The first implementation is called **10Base5, thick Ethernet,** or Thicknet. The nickname derives from the size of the cable, which is roughly the size of a garden hose and too stiff to bend with your hands. 10Base5 was the first Ethernet specification.

10Base5 uses a bus topology with an external transceiver connected via a tap to a thick coaxial cable. Figure 14.11 shows how a station can be connected to the medium.

Figure 14.11 *Connection of a station to the medium using 10Base5*

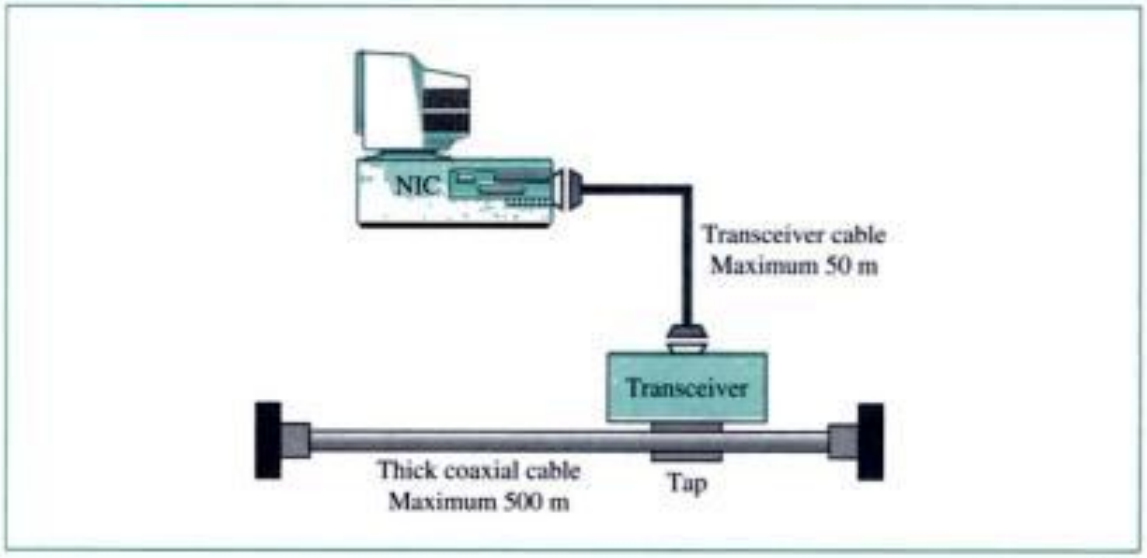

Copyrighted material

10Base2: Thin Ethernet

The second implementation is called **10Base2, thin Ethernet,** or Cheapernet. 10Base2 uses a bus topology with an internal transceiver or a point-to-point connection via an external transceiver. Figure 14.12 shows the connection of two stations to the medium. Note that if the station uses an internal transceiver, there is no need for an AUI cable. If the station lacks a transceiver, then an external transceiver can be used in conjunction with the AUI.

Figure 14.12 *Connection of stations to the medium using 10Base2*

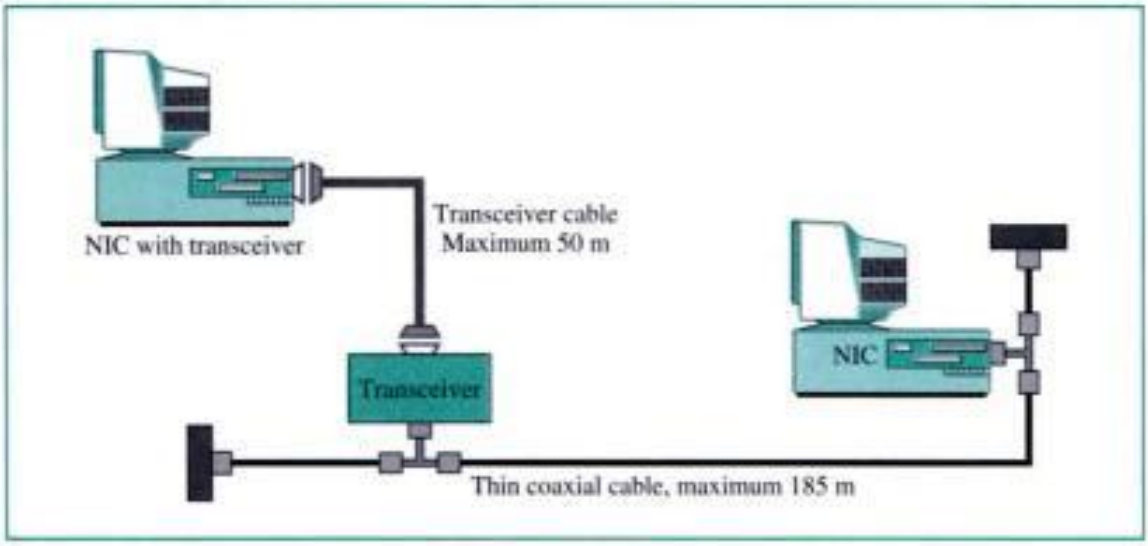

10Base-T: Twisted-Pair Ethernet

The third implementation is called **10Base-T** or **twisted-pair Ethernet.** 10Base-T uses a physical star topology. The stations are connected to a hub with an internal transceiver or an external transceiver. When the internal transceiver is used, there is no need for an AUI cable; the interface card is directly connected to the medium connector. When an external transceiver is used, the transceiver is connected through an AUI cable to the interface. The transceiver is connected then to the hub, as shown in Figure 14.13.

Figure 14.13 *Connection of stations to the medium using 10Base-T*

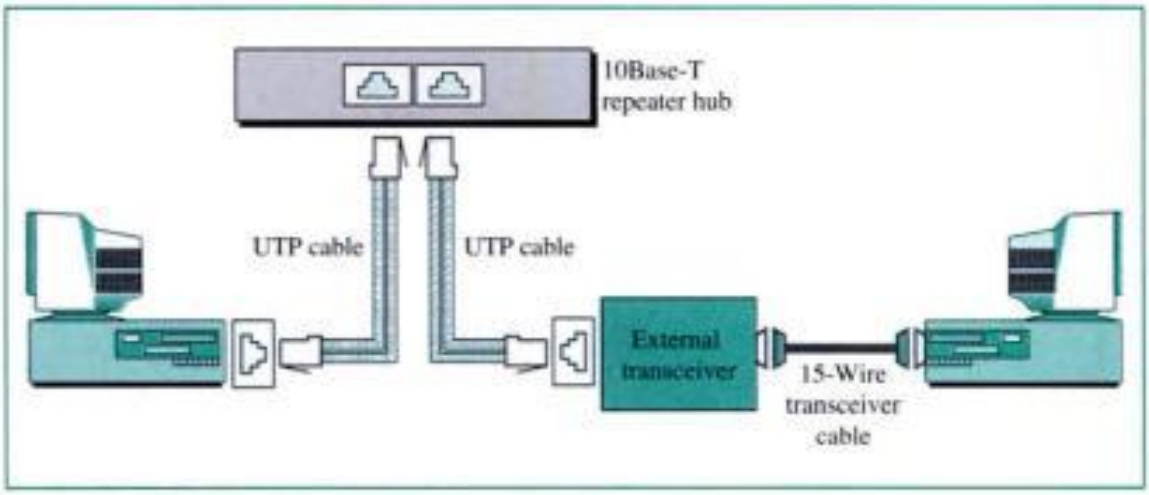

Copyrighted material

10Base-FL: Fiber Link Ethernet

Although several types of fiber-optic 10-Mbps Ethernet are defined, the one implemented by vendors is called **10Base-FL** or **fiber link Ethernet.** 10Base-FL uses a star topology to connect stations to a hub. The standard is normally implemented using an external transceiver called fiber-optic MAU. The station is connected to the external transceiver by an AUI cable. The transceiver is connected to the hub by using two pairs of fiber-optic cables, as shown in Figure 14.14.

Figure 14.14 *Connection of stations to the medium using 10Base-FL*

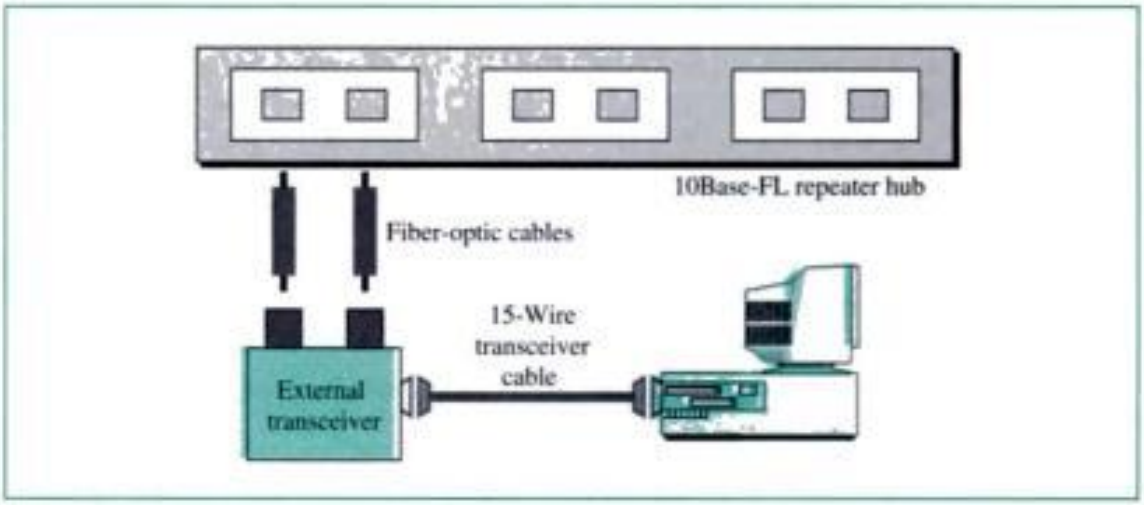

Bridged Ethernet

The first step in the Ethernet evolution was the division of a LAN by **bridges.** Bridges have two effects on an Ethernet LAN: They raise the bandwidth and separate collision domains. We discuss bridges in Chapter 16.

Raising the Bandwidth

In an unbridged Ethernet network, the total capacity (10 Mbps) is shared between all stations with a frame to send; the stations share the bandwidth of the network. If only one station has frames to send, it benefits from the total capacity (10 Mbps). But if more than one station needs to use the network, the capacity is shared. For example, if two stations have a lot of frames to send, they probably alternate in usage. When one station is sending, the other one refrains from sending. We can say that, on average, each station sends at the rate of 5 Mbps. Figure 14.15 shows the situation.

The bridge, as we will learn in Chapter 16, can help here. A bridge divides the network into two or more networks. Bandwidthwise, each network is independent. For example, in Figure 14.16, a network with 12 stations is divided into two networks, each with 6 stations. Now each network has a capacity of 10 Mbps. The 10-Mbps capacity in each segment is now shared between 6 stations (actually 7 because the bridge acts as a station in each segment), not 12 stations. In a network with a heavy load, each station

Copyrighted material

Figure 14.15 *Sharing bandwidth*

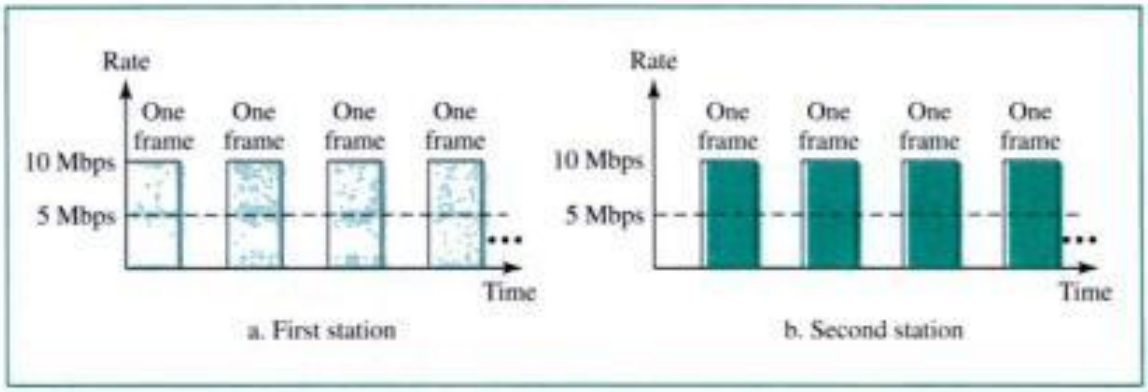

Figure 14.16 *A network with and without a bridge*

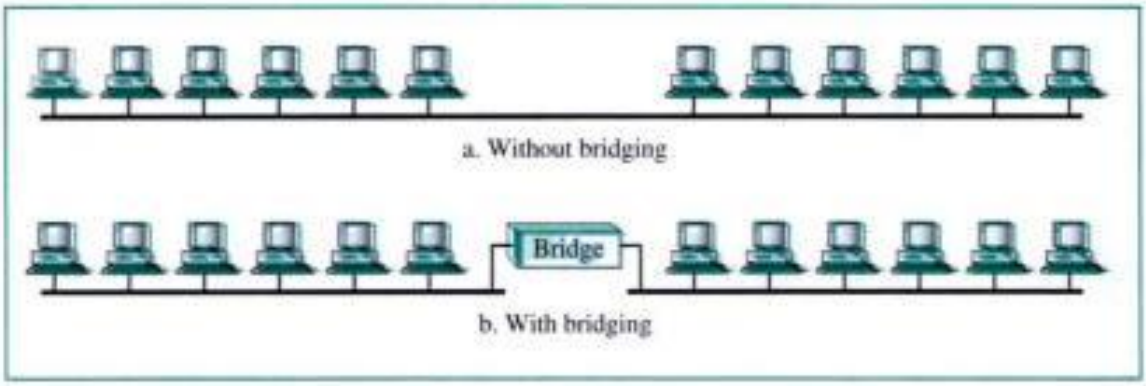

theoretically is offered 10/6 Mbps instead of 10/12 Mbps, assuming that the traffic is not going through the bridge.

It is obvious that if we further divide the network, we can gain more bandwidth for each segment. For example, if we use a four-port bridge, each station is now offered 10/3 Mbps, which is 4 times more than a nonbridged network.

Separating Collision Domains

Another advantage of a bridge is the separation of the **collision domain.** Figure 14.17 shows the collision domains for an unbridged and a bridged network. You can see that the collision domain becomes much smaller and the probability of collision is reduced tremendously. Without bridging, 12 stations contend for access to the medium; with bridging only 3 stations contend for access to the medium.

Switched Ethernet

The idea of a bridged LAN can be extended to a switched LAN. Instead of having two to four networks, why not have *N* networks, where *N* is the number of stations on the LAN? In other words, if we can have a multiple-port bridge, why not have an *N*-port switch? In this way, the bandwidth is shared only between the station and the switch (5 Mbps each). In addition, the collision domain is divided into *N* domains.

Copyrighted material

Figure 14.17 *Collision domains in a nonbridged and bridged network*

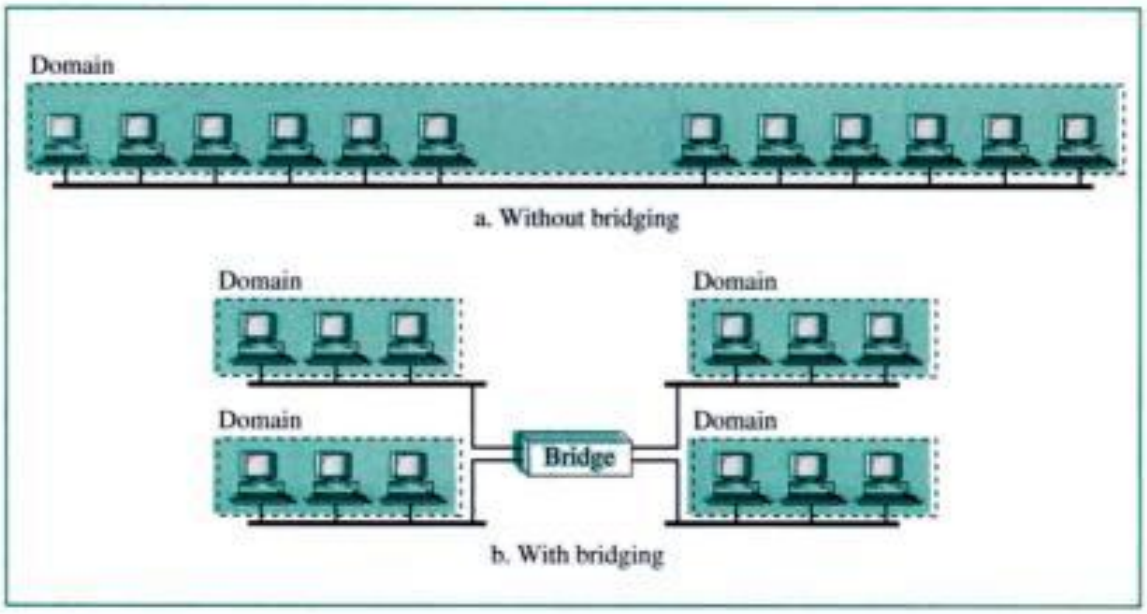

A layer 2 **switch** is an *N*-port bridge with additional sophistication that allows faster handling of the packets. Evolution from a bridged Ethernet to a **switched Ethernet** was a big step that opened the way to an even faster Ethernet, as we will see. Figure 14.18 shows a switched LAN.

Figure 14.18 *Switched Ethernet*

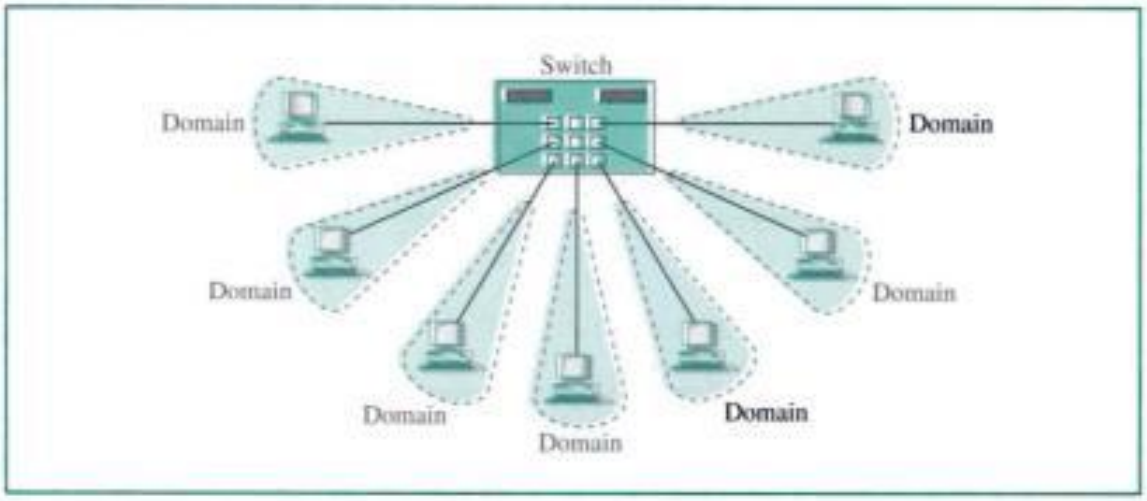

Full-Duplex Ethernet

One of the limitations of 10Base5 and 10Base2 is that communication is half-duplex (10Base-T is always full-duplex); a station can either send or receive, but not at the same time. The next step in the evolution was to move from switched Ethernet to **full-duplex switched Ethernet.** The full-duplex mode increases the capacity of each domain

Copyrighted material

Figure 14.19 *Full-duplex switched Ethernet*

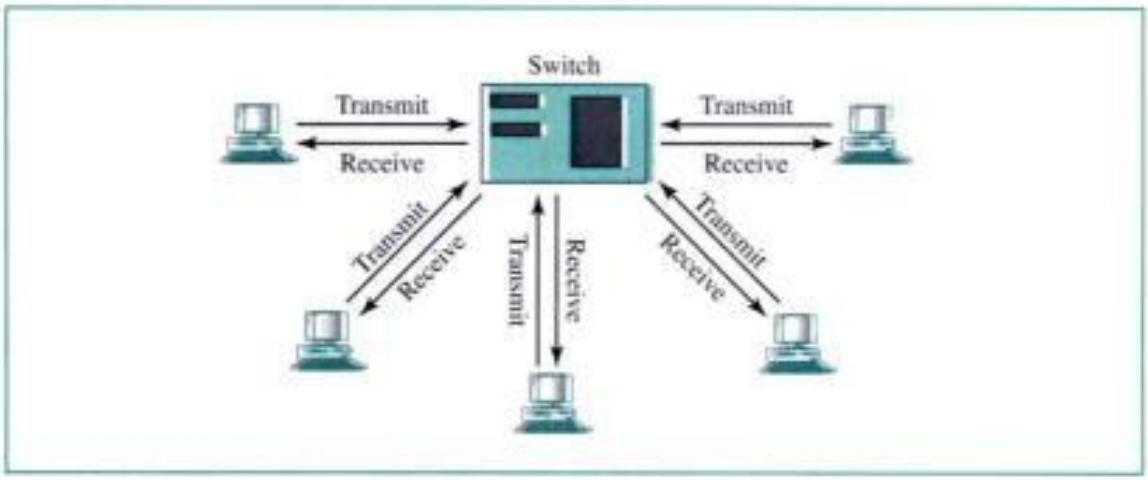

from 10 to 20 Mbps. Figure 14.19 shows a switched Ethernet in full-duplex mode. Note that, instead of using one link between the station and the switch, the configuration uses two links: one to transmit and one to receive.

No Need for CSMA/CD

In full-duplex switched Ethernet, there is no need for the CSMA/CD method. In a switched full-duplex Ethernet, each station is connected to the switch via two separate links. Each station or switch can send and receive independently without worrying about collision. Each link is a point-to-point dedicated path between the station and the switch. There is no more need for carrier sensing; there is no more need for collision detection. The job of the MAC layer becomes much easier. The carrier sense and collision detection functionality of the MAC sublayer can be turned off.

MAC

Traditional Ethernet was designed as a connectionless protocol at the MAC sublayer. There is no explicit flow control or error control to inform the sender that the frame has arrived at the destination without error. When the receiver receives the frame it does not send any positive or negative acknowledgment.

To provide for flow and error control in full-duplex switched Ethernet, a new sublayer, called the MAC control, is added between the LLC sublayer and the MAC sublayer.

14.2 FAST ETHERNET

The need for a higher data rate resulted in the design of the **Fast Ethernet** protocol (100 Mbps).

Mac Sublayer

The whole idea in the evolution of Ethernet from 10 to 100 Mbps is to keep the MAC sublayer untouched. The access method is the same (CSMA/CD). Of course, for full-duplex

Copyrighted material

Fast Ethernet, there is no need for CSMA/CD. However, the implementations keep CSMA/CD for backward compatibility with traditional Ethernet. Frame format, minimum and maximum frame lengths, and addressing are the same for 10- and 100-Mbps Ethernet.

Autonegotiation

A new feature added to Fast Ethernet is called **autonegotiation.** It allows a station or a hub a range of capabilities. Auto negotiation allows two devices to negotiate the mode or data rate of operation. It was particularly designed for the following purposes:

- To allow incompatible devices to connect to one another. For example, a device with a maximum capacity of 10 Mbps can communicate with a device that is designed for 100 Mbps (but can work at a lower rate).
- To allow one device to have multiple capabilities.
- To allow a station to check a hub's capabilities.

Physical Layer

Figure 14.20 shows the physical layer for 100-Mbps Ethernet.

Figure 14.20 *Fast Ethernet physical layer*

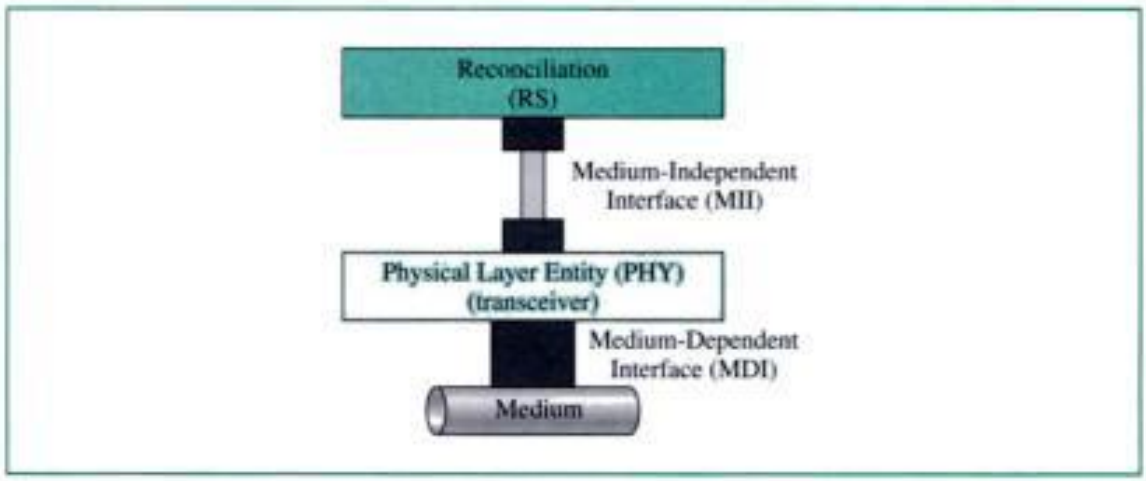

The physical layer is made up of four sublayers: RS, MII, PHY, and MDI. The reconciliation sublayer is common to all implementations. The PHY and MDI are medium-dependent.

RS

The **reconciliation sublayer** in Fast Ethernet replaces the PLS sublayer in 10-Mbps Ethernet. Encoding and decoding, which were performed by the PLS, are moved to the PHY sublayer (transceiver) because encoding in Fast Ethernet is medium-dependent. The reconciliation sublayer is responsible for whatever is left over, specifically, the passing of data in 4-bit format (nibble) to the MII, as we will see shortly.

Copyrighted material

MII

In the design of Fast Ethernet, the AUI was replaced with the **medium-independent interface (MII).** The MII is an improved interface that can be used with both a 10- and 100-Mbps data rate. Figure 14.21 shows the MII.

Figure 14.21 *MII*

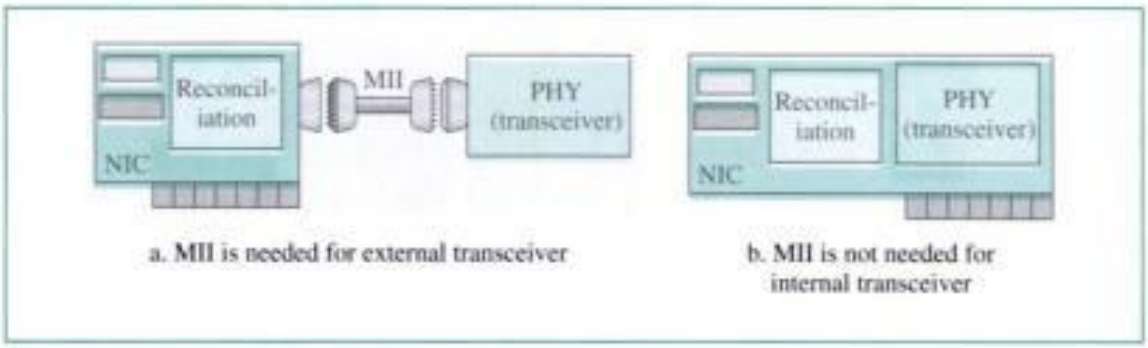

a. MII is needed for external transceiver

b. MII is not needed for internal transceiver

We summarize the features of MII as follows:

- It operates at both 10 and 100 Mbps. In other words, it is backward-compatible with the AUI.
- It features a parallel data path (4 bits at a time) between the PHY sublayer and the reconciliation sublayer.
- Management functions are added.

PHY (Transceiver)

The transceiver in Fast Ethernet is called the **PHY sublayer.** Besides the regular functions mentioned in 10-Mbps Ethernet, the transceiver in Fast Ethernet is responsible for encoding and decoding. This function was moved from the PLS layer to the PHY sublayer. A transceiver can be external or internal. An external transceiver is installed close to the medium and is connected via an MII cable to the station. An internal transceiver is installed inside the station (on the interface card) and does not need an MII cable. Because a transceiver is medium-dependent, we will discuss the transceiver designed for each implementation in the implementation section.

MDI

To connect the transceiver (internal or external) to the medium, we need a medium-dependent interface (MDI). The MDI is just a piece of hardware that is implementation-specific.

Physical Layer Implementation

Fast Ethernet can be categorized as either a two-wire or a four-wire implementation. The two-wire implementation is called 100Base-X, which can be either twisted-pair

Copyrighted material

Figure 14.22 *Fast Ethernet implementations*

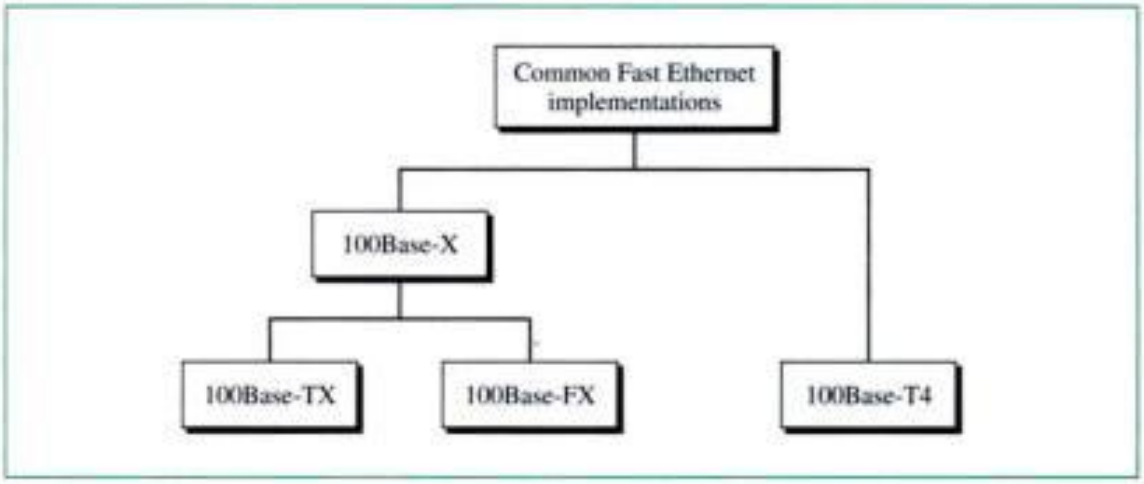

cable (100Base-TX) or fiber-optic cable (100Base-FX). The four-wire implementation is designed only for twisted-pair cable (100Base-T4). In other words, we have three implementations: 100Base-TX, 100Base-FX, and 100Base-T4, as shown in Figure 14.22.

100Base-TX

100Base-TX uses two pairs of twisted-pair cable (either category 5 UTP or STP) in a physical star topology. The implementation allows either an external transceiver (with an MII cable) or an internal transceiver. Figure 14.23 shows both types of connections.

Figure 14.23 *100Base-TX implementation*

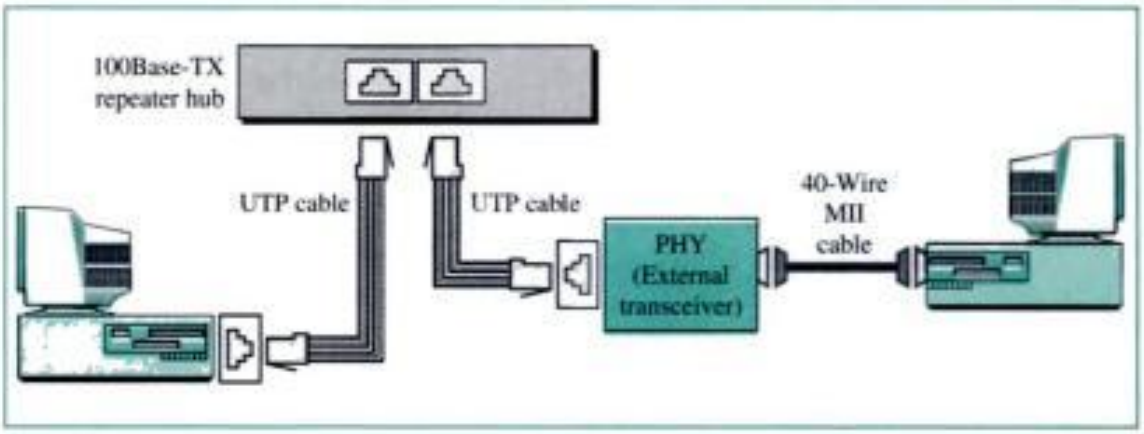

Transceiver In Fast Ethernet, the transceiver is responsible for transmitting, receiving, detecting collisions, and encoding/decoding of data.

Copyrighted material

Encoding and Decoding To achieve a 100-Mbps data rate, encoding (and decoding) is implemented in two steps, as shown in Figure 14.24.

Figure 14.24 *Encoding and decoding in 100Base-TX*

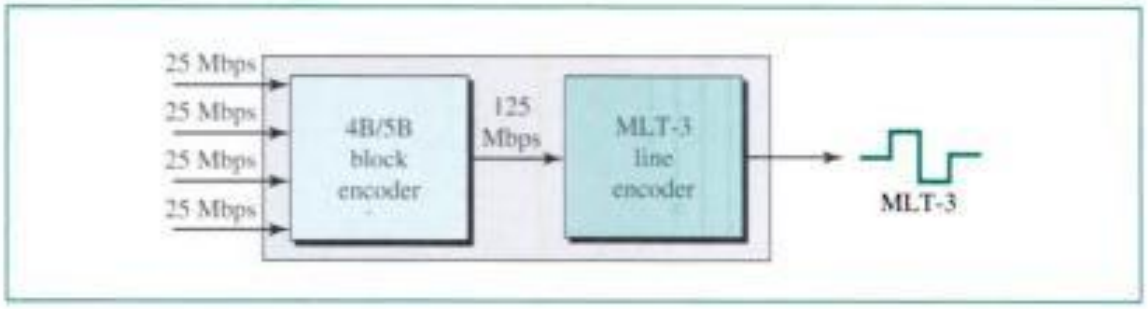

To maintain synchronization, the encoder first performs block encoding. The 4 parallel bits received from the NIC are encoded into 5 serial bits using 4B/5B, discussed in Chapter 4. This requires a bandwidth of 125 MHz (125 Mbps).

The data at the 125-Mbps rate are then encoded into a signal using MLT-3 (see Chapter 4).

100Base-FX

100Base-FX uses two pairs of fiber-optic cables in a physical star topology. The implementation allows either an external transceiver (with an MII cable) or an internal transceiver. Figure 14.25 shows both types of connections.

Figure 14.25 *100Base-FX implementation*

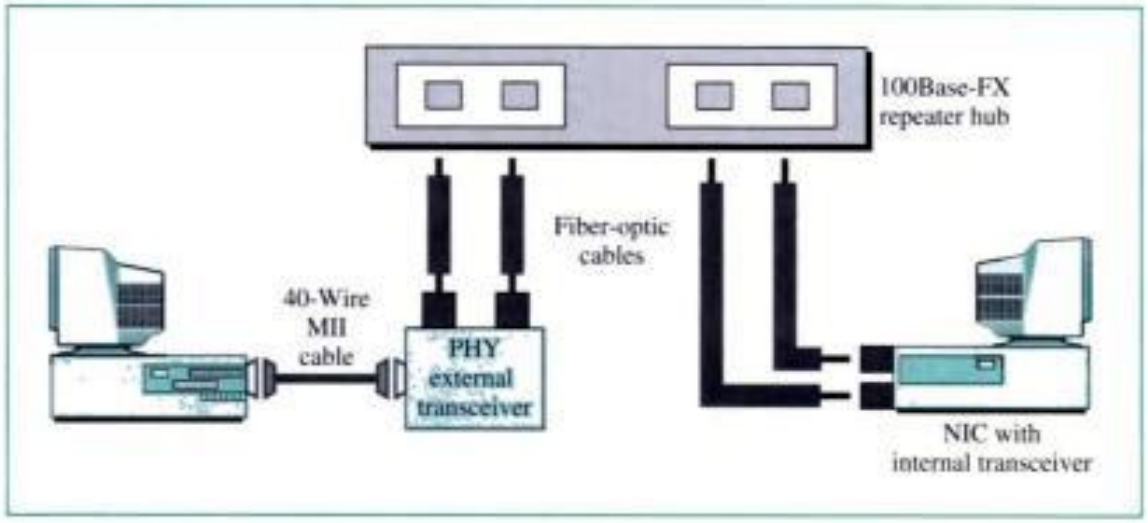

Transceiver The transceiver is responsible for transmitting, sending, detecting the collision, and encoding/decoding.

Encoding and Decoding 100Base-FX uses two levels of encoding, as shown in Figure 14.26.

Copyrighted material

Figure 14.26 *Encoding and decoding in 100Base-FX*

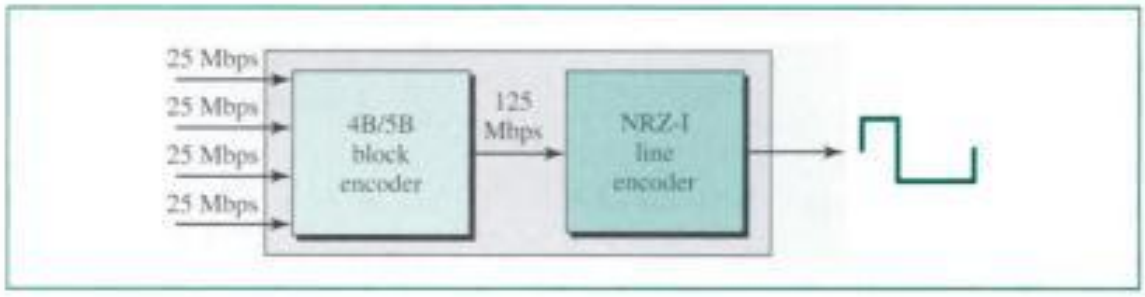

To maintain synchronization, the encoder first performs block encoding. The 4 parallel bits received from the NIC is encoded into 5 serial bits using 4B/5B. This requires a bandwidth of 125 MHz (125 Mbps).

The data at the 125-Mbps rate are then encoded into a signal using NRZ-I (see Chapter 4).

100Base-T4

A 100Base-TX network can provide a data rate of 100 Mbps, but it requires the use of category 5 UTP or STP cable. This is not cost-efficient for buildings that already have been wired for voice-grade twisted-pair (category 3). A new standard, called **100Base-T4,** was designed to use category 3 or higher UTP. The implementation uses four pairs of UTP for transmitting 100 Mbps. Figure 14.27 shows the connection of a station in a 100Base-T4 network.

Figure 14.27 *100Base-T4 implementation*

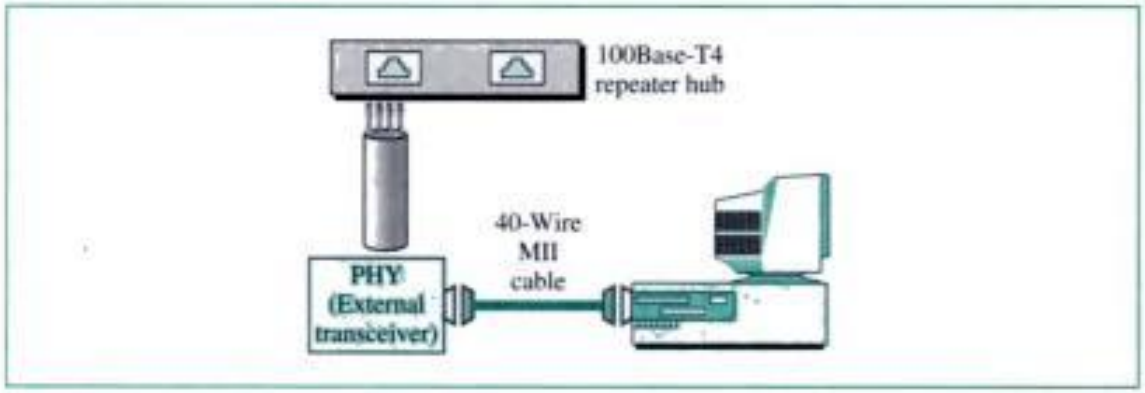

Transceiver

While the transceiver function in 100Base-T4 is similar to the other implementations, encoding and decoding are more complex.

Encoding and Decoding To maintain synchronization and at the same time reduce the bandwidth, 8B/6T (see Chapter 4) is used.

Transmission Using Four Wires The 8B/6T encoding reduces the bandwidth from 100 to 75 Mbaud (ratio of 8/6). However, a voice-grade UTP is not capable of handling even this bandwidth. 100Base-T4 is designed to operate on 25-Mbaud bandwidths. For unidirectional transmission, this would require six cable pairs (three pairs in each direction).

Copyrighted material

Figure 14.28 *Using four wires in 100Base-T4*

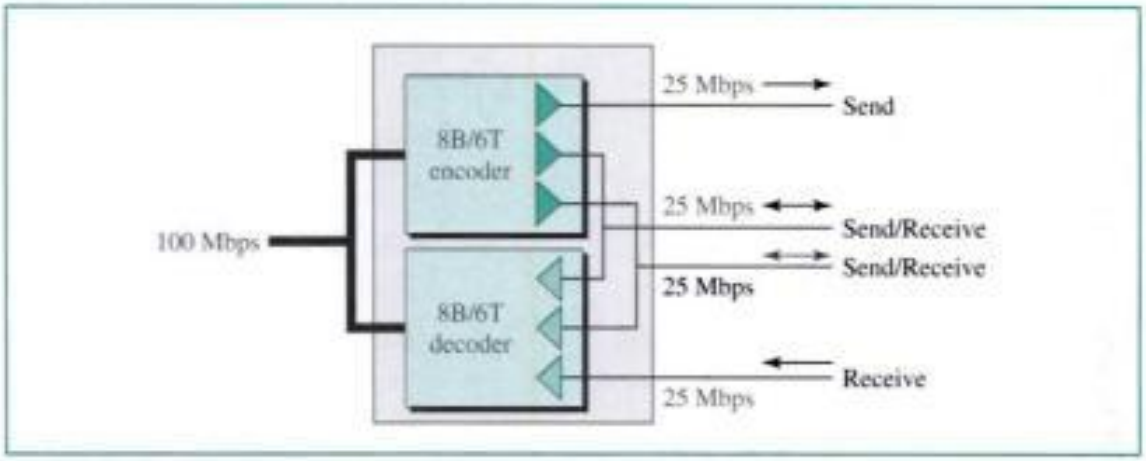

To cut down the number of pairs to four, two pairs are designed for unidirectional transmission and the other two for bidirectional transmission. The two unidirectional pairs are always free in one direction to carry collision signals. Figure 14.28 shows the wiring.

14.3 GIGABIT ETHERNET

Recent need for an even higher data rate resulted in the design of the **Gigabit Ethernet** protocol (1000 Mbps).

MAC Sublayer

The whole idea in the evolution of Ethernet was to keep the MAC sublayer untouched. However, when it came to sending at a 1-Gbps rate, this was no longer possible.

Access Method

Gigabit Ethernet has two distinctive approaches for medium access: half-duplex using CSMA/CD or full-duplex with no need for CSMA/CD. Although the half-duplex approach is very interesting, it is complicated and not in use today. In the full-duplex approach, there is no need for CSMA/CD. Almost all implementations of Gigabit Ethernet follow the full-duplex approach.

Physical Layer

Figure 14.29 shows the physical layer of Gigabit Ethernet. The physical layer is made up of four sublayers: reconciliation, GMII, PHY, and MDI. The reconciliation sublayer is common to all implementations. The PHY and MDI are medium-dependent. In this section, we discuss these sublayers briefly. In the next section, we define GMII, PHY, and MDI for each particular implementation.

RS

The reconciliation sublayer sends 8-bit parallel data to the PHY sublayer via a GMII interface.

Copyrighted material

Figure 14.29 *Physical layer in Gigabit Ethernet*

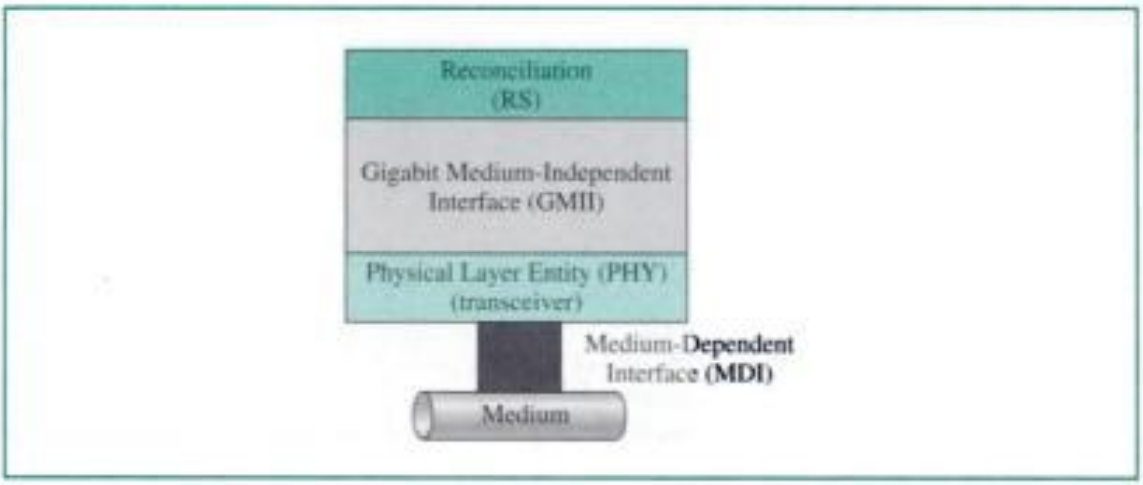

GMII

GMII (gigabit medium-independent interface) is a specification that defines how the reconciliation sublayer is to be connected to the PHY sublayer (transceiver). It is the counterpart of MII in Fast Ethernet. However, GMII is not an external physical component. It does not exist outside the NIC. In other words, it is primarily a logical, rather than a physical, interface. It is a specification for integrated circuits or circuit boards for the Gigabit Ethernet NIC. Some features of GMII are as follows:

- It operates only at 1000 Mbps. However, there are chips that support both MII and GMII. This means a station can operate at 10, 100, and 1000 Mbps while using such a chip.
- GMII specifies a parallel data path (8 bits at a time) between the RS sublayer and the transceiver.
- Management functions are included.
- There is no GMII cable.
- There is no GMII connector.

PHY (Transceiver)

Just as in Fast Ethernet, the transceiver is medium-dependent and also encodes and decodes. However, in Gigabit Ethernet, the transceiver can only be internal because there is no external GMII to provide the connection. We discuss the transceivers for each implementation in the implementation section.

MDI

Just as in Fast Ethernet, the MDI connects the transceiver to the medium. For Gigabit Ethernet, only the RJ-45 and fiber-optic connectors are defined.

Physical Layer Implementation

Gigabit Ethernet can be categorized as either a two-wire or a four-wire implementation. The two-wire implementation is called **1000Base-X,** which can use shortwave optical

Copyrighted material

Figure 14.30 *Gigabit Ethernet implementations*

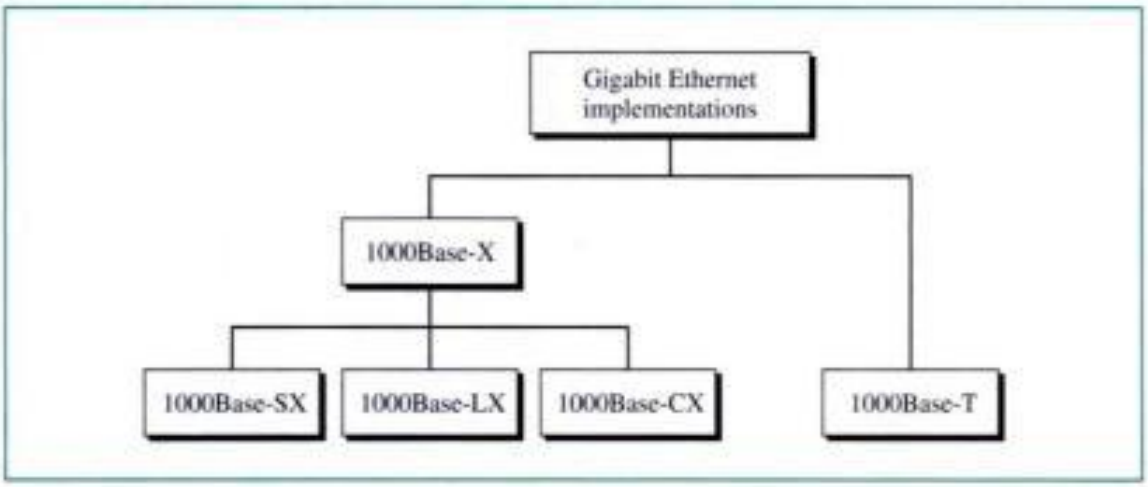

fiber **(1000Base-SX),** long-wave optical fiber **(1000Base-LX),** or short copper jumpers **(1000Base-CX).** The four-wire version uses twisted-pair cable **(1000Base-T).** In other words, we have four implementations, as shown in Figure 14.30.

1000Base-X

Both 1000Base-SX and 1000Base-LX use two fiber-optic cables. The only difference between them is that the former uses shortwave laser and the latter uses long-wave laser. As we said before, all implementations are designed with an internal transceiver, so there is no external GMII cable or connector. Figure 14.31 shows the connection of a station to the hub.

Figure 14.31 *1000Base-X implementation*

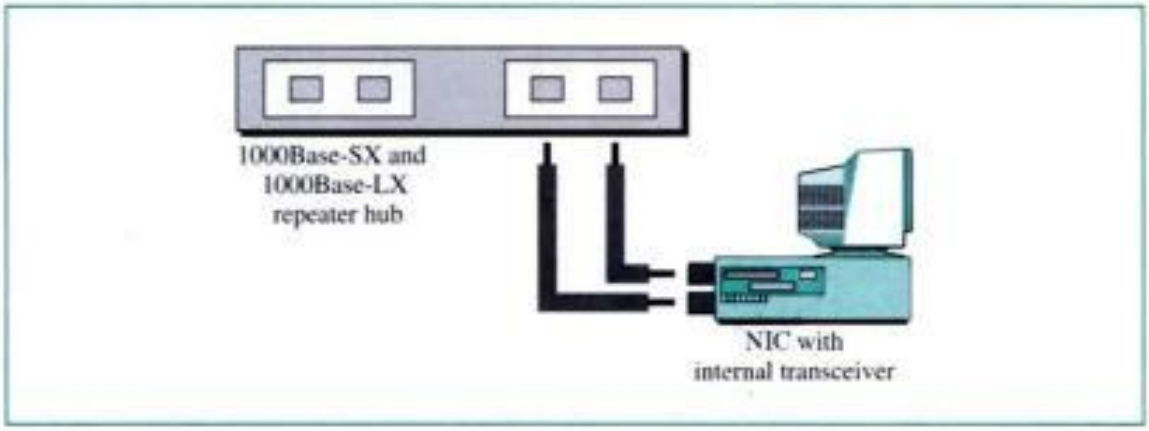

The 1000Base-CX implementation was designed to use STP cable, but it has never been implemented.

Transceiver The transceiver in Gigabit Ethernet is internal. Its functions are encoding and decoding, transmitting, receiving, and collision detection (if appropriate).

Copyrighted material

Figure 14.32 *Encoding in 1000Base-X*

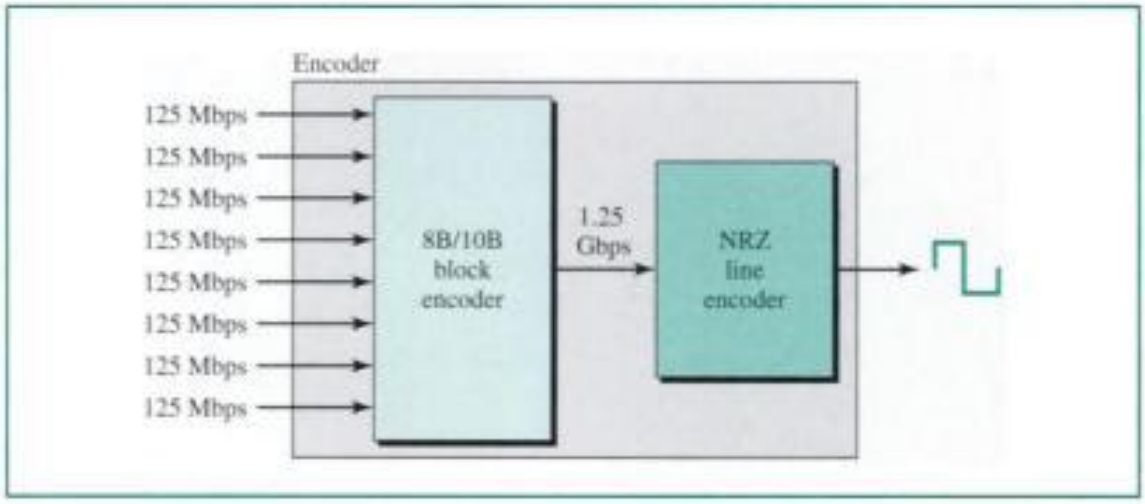

Encoding To achieve a 1000-Mbps data rate, encoding (and decoding) occurs in two steps, as shown in Figure 14.32.

To maintain synchronization, the encoder first performs block encoding. The 8 parallel bits received from the NIC is encoded into 10 serial bits using 8B/10B. This requires a bandwidth of 1.25 GHz (1.25 Gbps).

The data at the 1.25-Gbps rate are then encoded into a signal using NRZ encoding, as discussed in Chapter 4.

1000Base-T

1000Base-T was designed to use category 5 UTP. Four twisted pairs achieve a transmission rate of 1 Gbps. Figure 14.33 shows the connection of a station to the medium in this implementation.

Figure 14.33 *1000Base-T implementation*

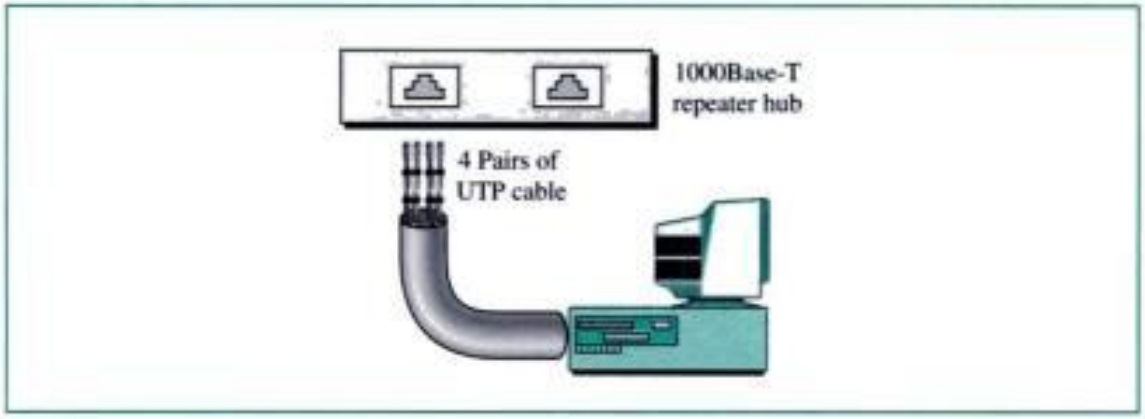

Transceiver To send 1.25 Gbps over four pairs of UTP, 1000Base-T uses an encoding scheme called **4D-PAM5 (4-dimensional, 5-level pulse amplitude modulation).**

Copyrighted material

Figure 14.34 *Encoding in 1000Base-T*

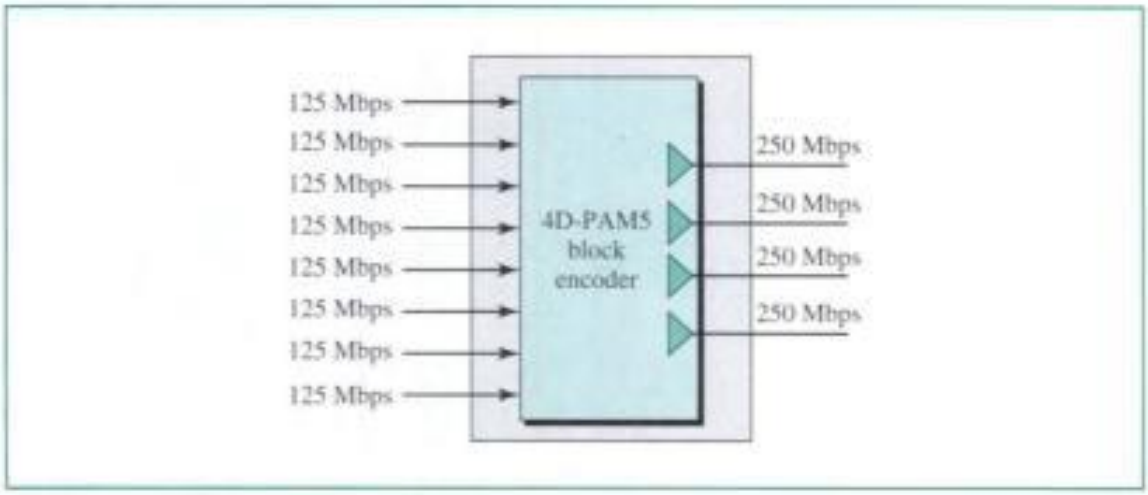

Five levels of pulse amplitude modulation are used. The technique is very complicated and beyond the scope of this book. Figure 14.34 shows the overall concept.

14.4 KEY TERMS

1000Base-CX
1000Base-LX
1000Base-SX
1000Base-T
1000Base-X
100Base-FX
100Base-T4
100Base-TX
100Base-X
10Base2
10Base5
10Base-FL
10Base-T
4-dimensional, 5-level pulse amplitude modulation (4D-PAM5)
attachment unit interface (AUI)
autonegotiation
bridge
broadcast address
collision domain
destination address (DA)
Ethernet
Fast Ethernet
fiber link Ethernet
full-duplex switched Ethernet
Gigabit Ethernet
gigabit medium-independent interface (GMII)
hexadecimal notation
medium access control (MAC) sublayer
medium attachment unit (MAU)
medium-dependent interface (MDI)
medium-independent interface (MII)
multicast address
network interface card (NIC)
PHY sublayer
physical layer signaling (PLS) sublayer
preamble
reconciliation sublayer
source address (SA)
start frame delimiter (SFD)
switched Ethernet
thick Ethernet
thin Ethernet
transceiver
twisted-pair Ethernet
unicast address

Copyrighted material

14.5 SUMMARY

- Ethernet is the most widely used local area network protocol.
- The IEEE 802.3 standard defines 1-persistent CSMA/CD as the access method for first-generation 10-Mbps Ethernet.
- The data link layer of Ethernet consists of the LLC sublayer and the MAC sublayer.
- The MAC sublayer is responsible for the operation of the CSMA/CD access method.
- Each station on an Ethernet network has a unique 48-bit address imprinted on its network interface card (NIC).
- The minimum frame length for 10-Mbps Ethernet is 64 bytes; the maximum is 1518 bytes.
- The physical layer of 10-Mbps Ethernet can be composed of four sublayers: the physical layer signaling (PLS) sublayer, the attachment unit interface (AUI) sublayer, the medium attachment unit (MAU) sublayer, and the medium-dependent interface (MDI) sublayer.
- The common baseband implementations of 10-Mbps Ethernet are 10Base5 (thick Ethernet), 10Base2 (thin Ethernet), 10Base-T (twisted-pair Ethernet), and 10Base-FL (fiber link Ethernet).
- The 10Base5 implementation of Ethernet uses thick coaxial cable. The 10Base2 implementation of Ethernet uses thin coaxial cable. The 10Base-T implementation of Ethernet uses twisted-pair cable that connects each station to a port in a hub. The 10Base-FL implementation of Ethernet uses fiber-optic cable.
- A bridge can raise the bandwidth and separate the collision domains on an Ethernet LAN.
- A switch allows each station on an Ethernet LAN to have the entire capacity of the network to itself.
- Full-duplex mode doubles the capacity of each domain and deletes the need for the CSMA/CD method.
- Fast Ethernet has a data rate of 100 Mbps.
- In Fast Ethernet, autonegotiation allows two devices to negotiate the mode or data rate of operation.
- The Fast Ethernet reconciliation sublayer is responsible for the passing of data in 4-bit format to the MII.
- The Fast Ethernet MII is an interface that can be used with both a 10- and a 100-Mbps interface.
- The Fast Ethernet PHY sublayer is responsible for encoding and decoding.
- The common Fast Ethernet implementations are 100Base-TX (two pairs of twisted-pair cable), 100Base-FX (two fiber-optic cables), and 100Base-T4 (four pairs of voice-grade, or higher, twisted-pair cable).
- Gigabit Ethernet has a data rate of 1000 Mbps.
- Gigabit Ethernet access methods include half-duplex using traditional CSMA/CD (not common) and full-duplex (most popular method).

Copyrighted material

- The Gigabit Ethernet reconciliation sublayer is responsible for sending 8-bit parallel data to the PHY sublayer via a GMII interface.
- The Gigabit Ethernet GMII defines how the reconciliation sublayer is to be connected to the PHY sublayer.
- The Gigabit Ethernet PHY sublayer is responsible for encoding and decoding.
- The common Gigabit Ethernet implementations are 1000Base-SX (two optical fibers and a shortwave laser source), 100Base-LX (two optical fibers and a long-wave laser source), and 100Base-T (four twisted pairs).

14.6 PRACTICE SET

Review Questions

1. How is the preamble field different from the SFD field?
2. What is the purpose of an NIC?
3. What is the purpose of a transceiver?
4. What is the difference between a multicast address and a broadcast address?
5. What are the advantages of dividing an Ethernet LAN with a bridge?
6. What is the relationship between a switch and a bridge?
7. Why is there no need for CSMA/CD on a full-duplex Ethernet LAN?
8. Compare the data rates for traditional Ethernet, Fast Ethernet, and Gigabit Ethernet.
9. What are the common traditional Ethernet implementations?
10. What are the common Fast Ethernet implementations?
11. What are the common Gigabit Ethernet implementations?
12. What is the purpose of autonegotiation?
13. Compare the reconciliation sublayer in Fast Ethernet with the PLS sublayer in traditional Ethernet.
14. What is the GMII in Gigabit Ethernet?
15. What Internet model layers are of concern to LANs?

Multiple-Choice Questions

16. What is the hexadecimal equivalent of the Ethernet address 01011010 00010001 01010101 00011000 10101010 00001111?
    a. 5A-88-AA-18-55-F0
    b. 5A-81-BA-81-AA-0F
    c. 5A-18-5A-18-55-0F
    d. 5A-11-55-18-AA-0F
17. If an Ethernet destination address is 07-01-02-03-04-05, then this is a _____ address.
    a. Unicast
    b. Multicast

Copyrighted material

c. Broadcast

d. Any of the above

18. If an Ethernet destination address is 08-07-06-05-44-33, then this is a _____ address.

a. Unicast

b. Multicast

c. Broadcast

d. Any of the above

19. Which of the following could not be an Ethernet source address?

a. 8A-7B-6C-DE-10-00

b. EE-AA-C1-23-45-32

c. 46-56-21-1A-DE-F4

d. 8B-32-21-21-4D-34

20. Which of the following could not be an Ethernet unicast destination?

a. 43-7B-6C-DE-10-00

b. 44-AA-C1-23-45-32

c. 46-56-21-1A-DE-F4

d. 48-32-21-21-4D-34

21. Which of the following could not be an Ethernet multicast destination?

a. B7-7B-6C-DE-10-00

b. 7B-AA-C1-23-45-32

c. 7C-56-21-1A-DE-F4

d. 83-32-21-21-4D-34

22. A 10-station Ethernet LAN uses a _____-port bridge if the effective average data rate for each station is 2 Mbps.

a. 1

b. 2

c. 5

d. 10

23. A _____-station Ethernet LAN uses a four-port bridge. Each station has an effective average data rate of 1.25 Mbps.

a. 32

b. 40

c. 80

d. 160

24. Forty stations are on an Ethernet LAN. A 10-port bridge segments the LAN. What is the effective average data rate of each station?

a. 1.0 Mbps

b. 2.0 Mbps

c. 2.5 Mbps

d. 5.0 Mbps

Copyrighted material

25. An 80-station traditional Ethernet is divided into four collision domains. This means that a maximum of _____ stations contend for medium access at any one time.
    a. 320
    b. 80
    c. 76
    d. 20
26. What is the efficiency of 4B/5B block encoding?
    a. 20 percent
    b. 40 percent
    c. 60 percent
    d. 80 percent
27. What is the efficiency of a frame in half-duplex Gigabit Ethernet carrying 46 bytes of data?
    a. 97 percent
    b. 70 percent
    c. 56 percent
    d. 12 percent
28. Which of the following is a four-wire Gigabit Ethernet implementation?
    a. 1000Base-SX
    b. 1000Base-LX
    c. 1000Base-CX
    d. 1000Base-T
29. What is the efficiency of 8B/10B encoding?
    a. 20 percent
    b. 40 percent
    c. 60 percent
    d. 80 percent

Exercises

30. What is the average size of an Ethernet frame?
31. What is the ratio of useful data to the entire packet for the smallest Ethernet frame? What is the ratio for the largest frame? What is the average ratio?
32. Why do you think that an Ethernet frame should have a minimum data size?
33. Imagine the length of a 10Base5 cable is 2500 m. If the speed of propagation in a thick coaxial cable is 200,000,000 m/s, how long does it take for a bit to travel from the beginning to the end of the network? Ignore any propagation delay in the equipment.
34. The data rate of 10Base5 is 10 Mbps. How long does it take to create the smallest frame? Show your calculation.
35. An Ethernet MAC sublayer receives 42 bytes of data from the LLC sublayer. How many bytes of padding must be added to the data?

Copyrighted material

36. An Ethernet MAC sublayer receives 1510 bytes of data from the LLC layer. Can the data be encapsulated in one frame? If not, how many frames need to be sent? What is the size of the data in each frame?

37. Complete Table 14.1.

Table 14.1 *Exercise 37*

Characteristics	*10Base5*	*10Base2*	*10Base-T*	*10Base-FL*
Type of cable				
Type of transceiver				
Need for cable end				

38. Compare the physical sublayers of Fast and Gigabit Ethernet, using Table 14.2.

Table 14.2 *Exercise 38*

Sublayers	*Fast Ethernet*	*Gigabit Ethernet*
Reconciliation		
MII		
GII		
PHY		
MDI		

39. Compare the different Fast Ethernet implementations using Table 14.3.

Table 14.3 *Exercise 39*

Implementation	*Media*	*Encoding Methods*
100Base-TX		
100Base-FX		
100Base-T4		

40. Compare the different Gigabit Ethernet implementations using Table 14.4.

Table 14.4 *Exercise 40*

Implementation	*Media*	*Encoding Methods*
1000Base-SX		
1000Base-LX		
1000Base-CX		
1000Base-T		

Copyrighted material

Copyrighted material

CHAPTER 15

Wireless LANs

Wireless communication is one of the fastest growing technologies. The demand for connecting devices without cable is increasing everywhere. Wireless LANs are found on college campuses, office buildings, and public areas. At home, a **wireless LAN** can connect roaming devices to the Internet.

In this chapter, we concentrate on two promising wireless technologies for LANs: IEEE 802.11 wireless LANs, sometimes called wireless Ethernet, and Bluetooth, a complex technology for small wireless LANs.

Although both protocols need several layers to operate, we mostly concentrate on the physical and data link layer in this part of the book. In this chapter, we study these technologies as wireless links, links that can connect us to the Internet. How the connection is made and how end-to-end communication is accomplished are the subjects of future chapters.

15.1 IEEE 802.11

IEEE has defined the specification for a wireless LAN, called **IEEE 802.11,** which covers the physical and data link layers. But before discussing these layers, we describe the architecture of the protocol in general.

Architecture

The standard defines two kinds of services: the basic service set (BSS) and the extended service set (ESS).

Basic Service Set

IEEE 802.11 defines the **basic service set (BSS)** as the building block of a wireless LAN. A basic service set is made of stationary or mobile wireless stations and a possible central base station, known as the **access point (AP).** Figure 15.1 shows two sets in this standard.

The BSS without an AP is a stand-alone network and cannot send data to other BSSs. It is what is called an *ad hoc architecture*. In this architecture, stations can

Copyrighted material

Figure 15.1 *BSSs*

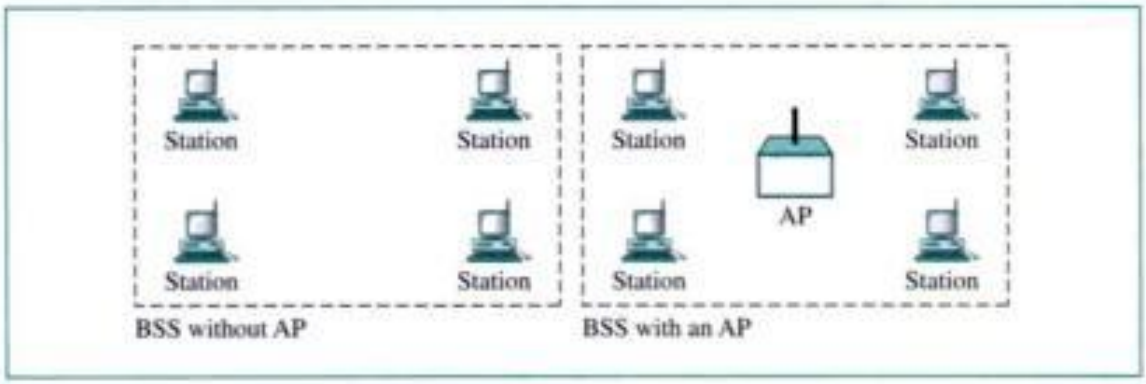

form a network without the need of an AP; they can locate each other and agree to be part of a BSS.

Extended Service Set

An **extended service set (ESS)** is made up of two or more BSSs with APs. In this case, the BSSs are connected through a *distribution system*, which is usually a wired LAN. The distribution system connects the APs in the BSSs. IEEE 802.11 does not restrict the distribution system; it can be any IEEE LAN such as an Ethernet. Note that the extended service set uses two types of stations: mobile and stationary. The mobile stations are normal stations inside a BSS. The stationary stations are AP stations that are part of a wired LAN. Figure 15.2 shows an ESS.

Figure 15.2 *ESS*

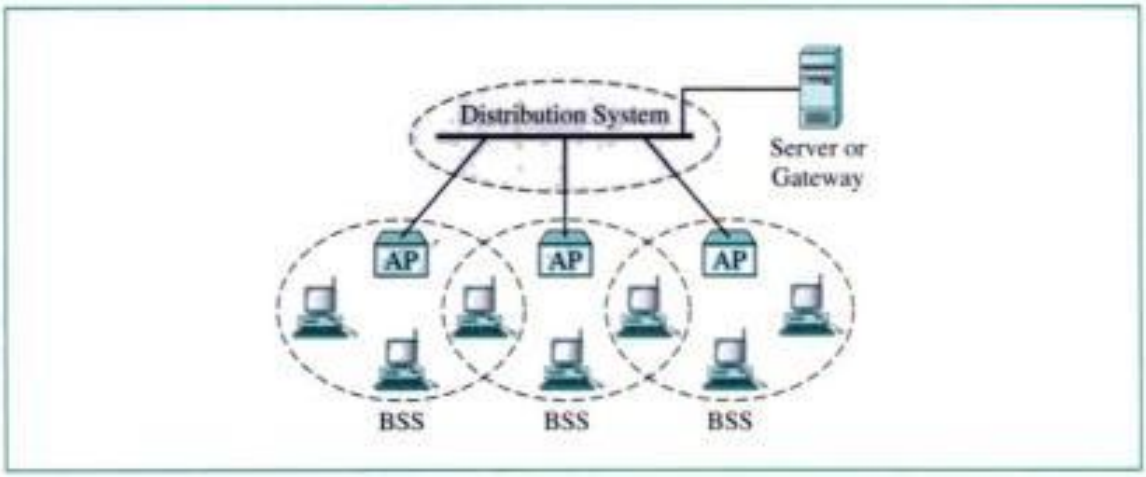

When BSSs are connected, we have what is called an *infrastructure network*. In this network, the stations within reach of one another can communicate without the use of an AP. However, communication between two stations in two different BSSs usually occurs via two APs. The idea is similar to communication in a cellular network if we consider each BSS to be a cell and each AP to be a base station. Note that a mobile station can belong to more than one BSS at the same time.

Copyrighted material

Station Types

IEEE 802.11 defines three types of stations based on their mobility in a wireless LAN: **no-transition, BSS-transition,** and **ESS-transition.**

No-Transition Mobility A station with no-transition mobility is either stationary (not moving) or moving only inside a BSS.

BSS-Transition Mobility A station with BSS-transition mobility can move from one BSS to another, but the movement is confined inside one ESS.

ESS-Transition Mobility A station with ESS-transition mobility can move from one ESS to another. However, IEEE 802.11 does not guarantee that communication is continuous during the move.

Physical Layer

IEEE 802.11 defines specifications for the conversion of bits to a signal in the physical layer; one specification is in the infrared frequencies and is not discussed here. The other five specifications are in the radio frequency range as shown in Figure 15.3.

Figure 15.3 *Physical layer specifications*

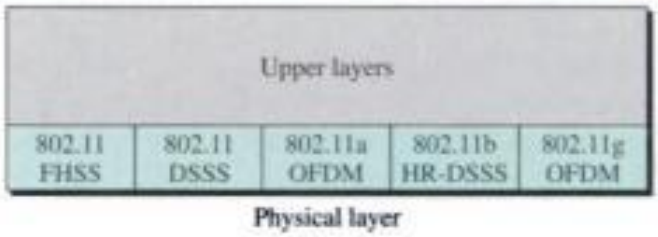

IEEE 802.11 FHSS

IEEE 802.11 FHSS describes the **frequency-hopping spread spectrum (FHSS)** method for signal generation in a 2.4-GHz ISM band.

FHSS FHSS is a method in which the sender sends on one carrier frequency for a short amount of time, then hops to another carrier frequency for the same amount of time, hops again to still another for the same amount of time, and so on. After *N* hoppings, the cycle is repeated (see Fig. 15.4). If the bandwidth of the original signal is B, the allocated spread spectrum bandwidth is $N \times B$.

Spreading makes it difficult for unauthorized persons to make sense of transmitted data. In FHSS the sender and receiver agree on the sequence of the allocated bands. In the figure, the first bit (or group of bits) is sent in subband 1, the second bit (or group of bits) is sent in subband 2, and so on. An intruder who tunes his or her receiver to frequencies for one subband may receive the first group of bits, but receives nothing in this subband during the second interval. The amount of time spent at each subband, called the dwell time, is 400 ms or more. Note that this is not a case of multiple access; all stations contend to use the same subbands to send their data. Contention is a function of the MAC sublayer, as we will see shortly.

Copyrighted material

Figure 15.4 *FHSS*

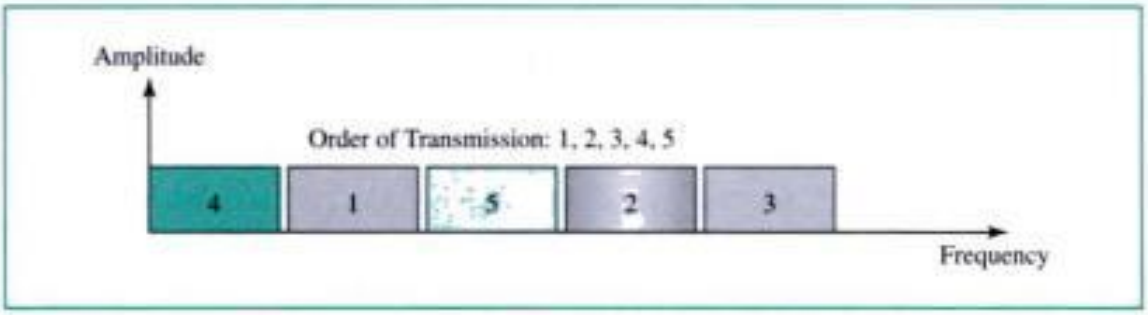

Band FHSS uses a 2.4-GHz industrial, scientific, and medical (ISM) band. The band in North America is from 2.4 GHz to 2.48 GHz. The band is divided into 79 subbands of 1 MHz. A pseudorandom number generator selects the hopping sequence.

Modulation and Data Rate The modulation technique in this specification is FSK at 1 Mbaud/s. The system allows 1 or 2 bits/baud (two-level FSK or four-level FSK), which results in a data rate of 1 or 2 Mbps.

IEEE 802.11 DSSS

IEEE 802.11 DSSS describes the **direct sequence spread spectrum (DSSS)** method for signal generation in a 2.4-GHz ISM band.

DSSS In DSSS, each bit sent by the sender is replaced by a sequence of bits called a chip code. To avoid buffering, however, the time needed to send one chip code must be the same as the time needed to send one original bit. If N is the number of bits in each chip code, then the data rate for sending chip codes is N times the data rate of the original bit stream. Figure 15.5 shows an example of DSSS.

Figure 15.5 *DSSS*

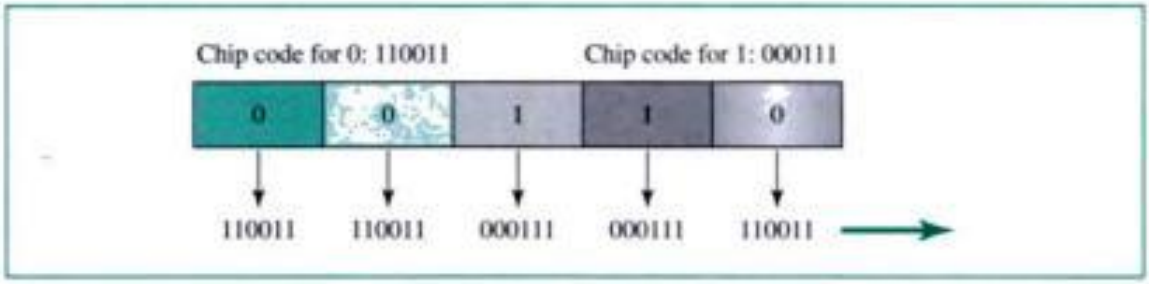

Although this scheme looks similar to CDMA (see Chapter 13), there is a major difference. DSSS is implemented at the physical layer. It is not a multiple-access method for the data link layer. We need a contention method at the data link layer, and that will be discussed shortly.

Band DSSS uses a 2.4-GHz ISM band. The bit sequence uses the entire band.

Modulation and Data Rate The modulation technique in this specification is PSK at 1 Mbaud/s. The system allows 1 or 2 bits/baud (BPSK or QPSK), which results in a data rate of 1 or 2 Mbps.

Copyrighted material

IEEE 802.11a OFDM

IEEE 802.11a OFDM describes the **orthogonal frequency-division multiplexing (OFDM)** method for signal generation in a 5-GHz ISM band.

OFDM OFDM is the same as FDM, with one major difference: All the subbands are used by one source at a given time. Sources contend with one another at the data link layer for access.

Band The specification uses a 5-GHz ISM band. The band is divided into 52 subbands, with 48 subbands for sending 48 groups of bits at a time and 4 subbands for control information. The scheme is similar to ADSL, as discussed in Chapter 9. Dividing the band into subbands diminishes the effects of interference. If the subbands are used randomly, security can also be increased.

Modulation and Data Rate OFDM uses PSK and QAM for modulation. The common data rates are 18 Mbps (PSK) and 54 Mbps (QAM).

IEEE 802.11b HR-DSSS

IEEE 802.11b HR-DSSS describes the **high-rate DSSS (HR-DSSS)** method for signal generation in a 2.4-GHz ISM band.

HR-DSSS HR-DSSS is similar to DSSS except for the encoding method, which is called **complementary code keying (CCK).** CCK encodes 4 or 8 bits to one CCK symbol.

Band The specification uses a 2.4-GHz ISM band.

Modulation and Data Rate To be backward-compatible with DSSS, HR-DSSS defines four data rates: 1, 2, 5.5, and 11 Mbps. The first two use the same modulation techniques as DSSS. The 5.5-Mbps version uses BPSK and transmits at 1.375 Mbaud/s with 4-bit CCK encoding. The 11-Mbps version uses QPSK and transmits at 1.375 Mbps with 8-bit CCK encoding. Note that the 11-Mbps version has a data rate close to 10-Mbps Ethernet.

IEEE 802.11g OFDM

This relatively new specification uses OFDM with a 2.4-GHz ISM band. The complex modulation technique achieves a 54-Mbps data rate.

MAC Layer

IEEE 802.11 defines two MAC sublayers: the **distributed coordination function (DCF)** and **point coordination function (PCF)** as shown in Figure 15.6.

PCF is an optional and complex access method that can be implemented in an infrastructure network (not in an ad hoc network). We do not discuss this here; for more information refer to Forouzan, *Local Area Networks,* McGraw-Hill. DCF is similar to CSMA/CA, as discussed in Chapter 13, with some additional control features. We discuss only the access method.

Copyrighted material

Figure 15.6 *MAC layers in IEEE 802.11 standard*

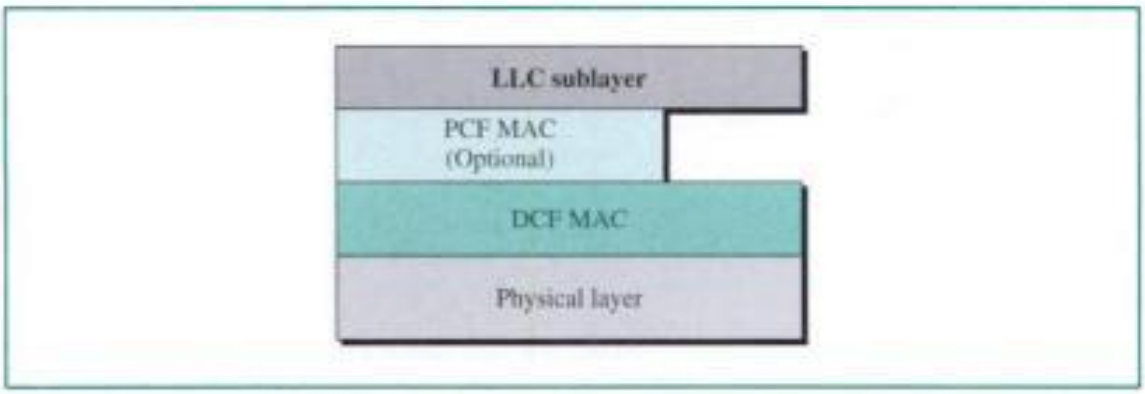

CSMA/CA

Wireless LANs cannot implement CSMA/CD for three reasons:

1. Collision detection implies that the station must be able to send data and receive collision signals at the same time. This implies costly stations and increased bandwidth requirements.
2. Collision may not be detected because of the hidden terminal problem. A terminal may be hidden from another in a wireless environment (due to natural obstacles such as mountains or artificial obstacles such as buildings). Suppose stations A and B both have data to send to station C. Station B is hidden from A, so if there is a collision near B, A will not hear. This does not happen in wired LANs because all stations are connected by wire and any collision is heard by all stations.
3. The distance between stations in wireless LANs can be great. Signal fading could prevent a station at one end from hearing a collision at the other end.

Process Flowchart Figure 15.7 shows a flowchart similar to one in Chapter 13. This one has modifications that we will explain shortly.

Frame Exchange Time Line Figure 15.8 shows the exchange of data and control frames in time.

1. Before sending a frame, the source station senses the medium by checking the energy level at the carrier frequency.
   a. The channel uses a persistence strategy with backoff until the channel is idle.
   b. After the station is found idle, the station waits for a period of time, called the **distributed interframe space (DIFS);** then the station sends a control frame called the request to send (RTS).
2. After receiving the RTS and waiting a short period of time, called the **short interframe space (SIFS),** the destination station sends a control frame, called the clear to send (CTS), to the source station. This control frame indicates that the destination station is ready to receive data.
3. The source station sends data after waiting an amount of time equal to SIFS.
4. The destination station, after waiting for an amount of time equal to SIFS, sends an acknowledgment to show that the frame has been received. Acknowledgment

Copyrighted material

Figure 15.7 *CSMA/CA flowchart*

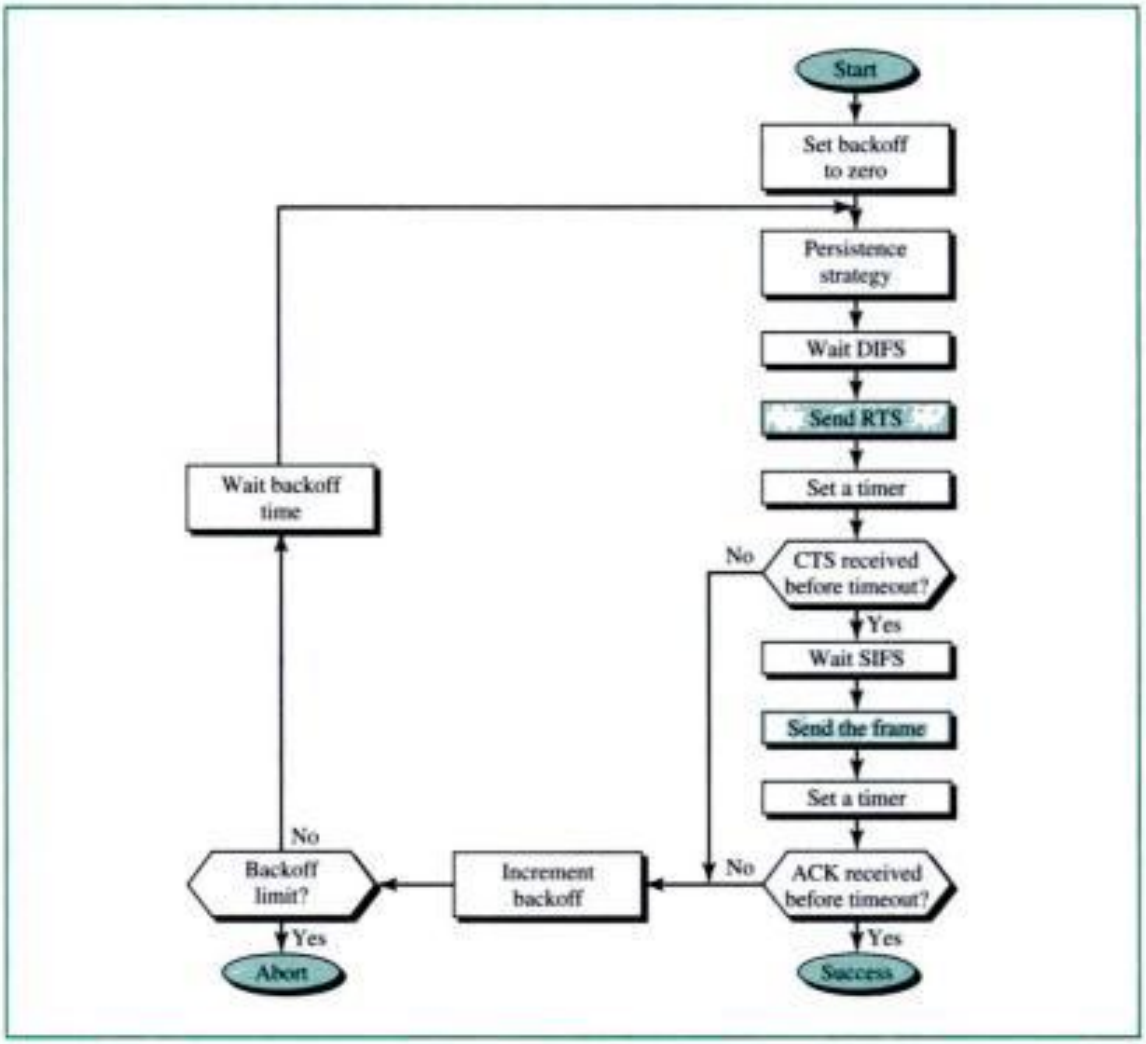

is needed in this protocol because the station does not have any means to check for the successful arrival of its data at the destination. On the other hand, the lack of collision in CSMA/CD is a kind of indication to the source that data have arrived.

Network Allocation Vector How do other stations defer sending their data if one station acquires access? In other words, how is the *collision avoidance* aspect of this protocol accomplished? The key is a feature called NAV.

When a station sends an RTS frame, it includes the duration of the time that it needs to occupy the channel. The stations that are affected by this transmission create a timer called a **network allocation vector (NAV)** that shows how much time must pass before these stations are allowed to check the channel for idleness. Each time a station accesses the system and sends an RTS frame, other stations start their NAV. In other words, each station, before sensing the physical medium to see if it is idle, first checks its NAV to see if it has expired. Figure 15.8 shows the idea of NAV.

Copyrighted material

Figure 15.8 *CSMA/CA and NAV*

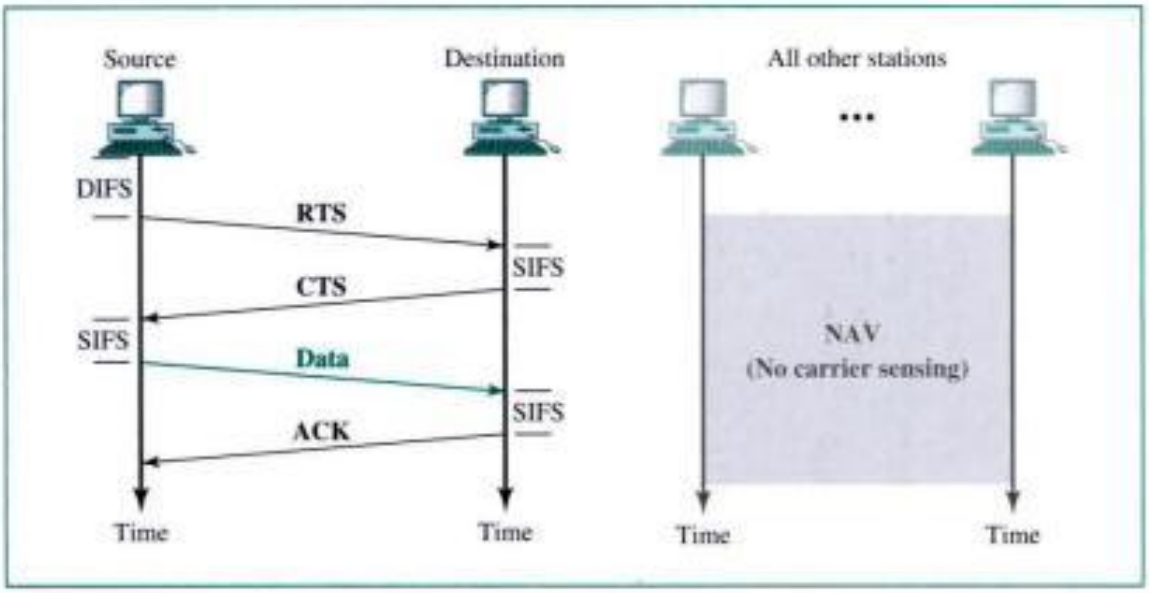

Collision During Handshaking What happens if there is collision during the time when RTS or CTS control frames are in transition, often called the **handshaking period?** Two or more stations may try to send RTS frames at the same time. These control frames may collide. However, because there is no mechanism for collision detection, the sender assumes there has been a collision if it has not received a CTS frame from the receiver. The backoff strategy is employed, and the sender tries again.

Fragmentation

The wireless environment is very noisy; a corrupt frame has to be retransmitted. The protocol, therefore, recommends fragmentation—the division of a large frame into smaller ones. It is more efficient to replace a small frame than a large one.

Frame Format

The MAC layer frame consists of nine fields, as shown in Figure 15.9.

Figure 15.9 *Frame format*

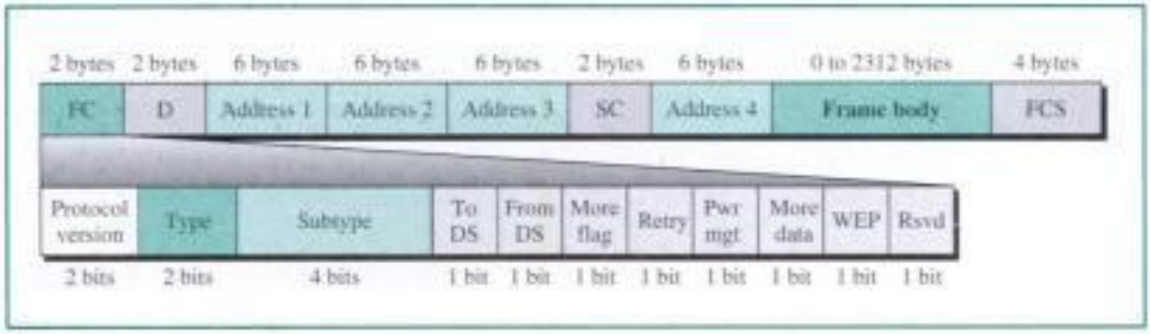

Copyrighted material

- **Frame control (FC).** The FC field is 2 bytes long and defines the type of the frame and some control information. Table 15.1 describes the subfields. We will discuss each frame type later in this chapter.

Table 15.1 *Subfields in FC field*

Field	*Explanation*
Protocol version	The current version is 0.
Type	Defines type of information carried in the frame body: management (00), control (01), or data (10).
Subtype	Defines the subtype of each type (see Table 15.2).
To DS	Defined later.
From DS	Defined later.
More flag	When set to 1, means more fragments.
Retry	When set to 1, means retransmitted frame.
Pwr mgt	When set to 1, means station is in power management mode.
More data	When set to 1, means station has more data to send.
WEP	Wired equivalent privacy. When set to 1, means encryption implemented.
Rsvd	Reserved.

- **D.** In all frame types except one, this field defines the duration of the transmission that is used to set the value of NAV. In one control frame, this field defines the ID of the frame.
- **Addresses.** There are four address fields, each 6 bytes long. The meaning of each address field depends on the value of the *To DS* and the *From DS* subfields and will be discussed later.
- **Sequence control.** This field defines the sequence number of the frame to be used in flow control.
- **Frame body.** This field, which can be between 0 and 2312 bytes, contains information based on the type and the subtype defined in the FC field.
- **FCS.** The FCS field is 4 bytes long and contains a CRC-32 error detection sequence.

Frame Types

A wireless LAN defined by IEEE 802.11 has three categories of frames: management frames, control frames, and data frames.

Management Frames Management frames are used for the initial communication between stations and access points.

Control Frames Control frames are used for accessing the channel and acknowledging frames. Figure 15.10 shows the format.

Copyrighted material

Figure 15.10 *Control frames*

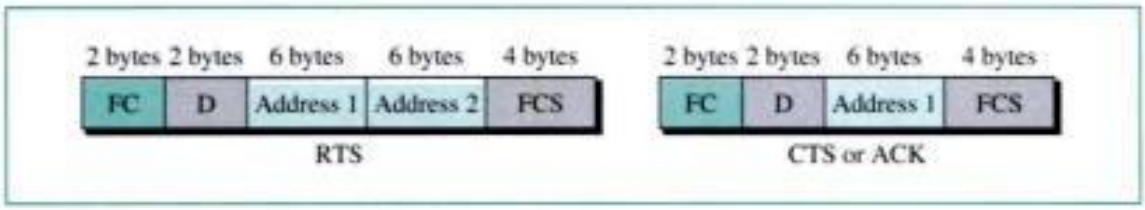

For control frames the value of the type field is 01; the values of the subtype fields for frames we have discussed are shown in Table 15.2.

Table 15.2 *Values of subfields in control frames*

Subtype	*Meaning*
1011	Request to send (RTS)
1100	Clear to send (CTS)
1101	Acknowledgment (ACK)

Data Frames Data frames are used for carrying data and control information.

Addressing Mechanism

The IEEE 802.11 addressing mechanism is complicated. The complexity stems from the fact that there may be intermediate stations (APs). There are four cases, defined by the value of the two flags in the FC field, *To DS* and *From DS*. Each flag can be either 0 or 1, thus defining four different situations. The interpretation of the four addresses (address 1 to address 4) in the MAC frame depends on the value of these flags, as shown in Table 15.3.

Table 15.3 *Addresses*

To DS	*From DS*	*Address 1*	*Address 2*	*Address 3*	*Address 4*
0	0	Destination station	Source station	BSS ID	N/A
0	1	Destination station	Sending AP	Source station	N/A
1	0	Receiving AP	Source station	Destination station	N/A
1	1	Receiving AP	Sending AP	Destination station	Source station

Note that address 1 is always the address of the next device. Address 2 is always the address of the previous device. Address 3 is the address of the final destination station if it is not defined by address 1. Address 4 is the address of the original source station if it is not the same as address 2.

Copyrighted material

Case 1

In this case, *To DS* = 0 and *From DS* = 0. This means that the frame is not going to a distribution system (*To DS* = 0) and is not coming from a distribution system (*From DS* = 0). The frame is going from one station in a BSS to another without passing through the distribution system. The ACK frame should be sent to the original sender. The addresses are as shown in Figure 15.11.

Figure 15.11 *Addressing mechanism: case 1*

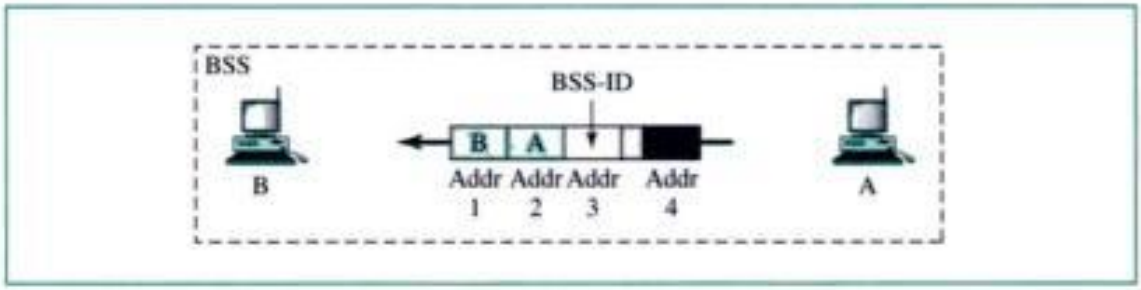

Case 2

In this case, *To DS* = 0 and *From DS* = 1. This means that the frame is coming from a distribution system (*From DS* = 1). The frame is coming from an AP and going to a station. The ACK should be sent to the AP. The addresses are as shown in Figure 15.12. Note that address 3 contains the original sender of the frame (in another BSS).

Figure 15.12 *Addressing mechanism: case 2*

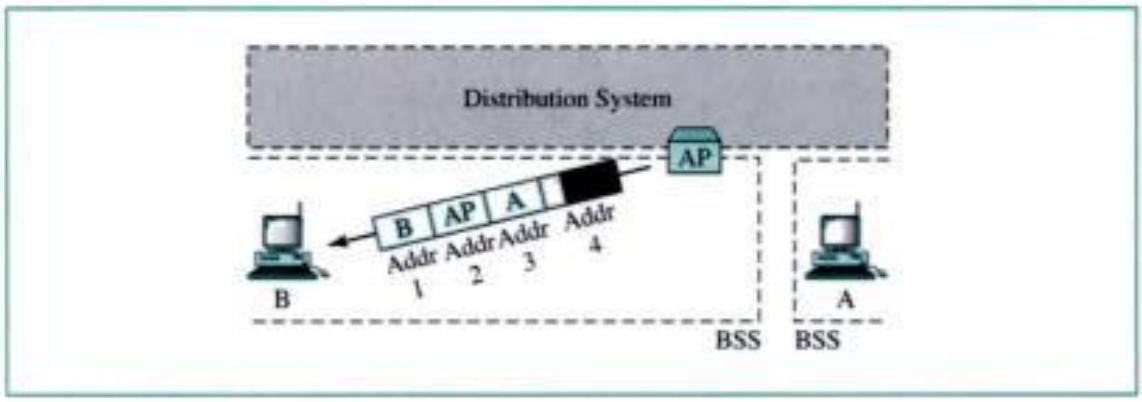

Case 3

In this case, *To DS* = 1 and *From DS* = 0. This means that the frame is going to a distribution system (*To DS* = 1). The frame is going from a station to an AP. The ACK is sent to the original station. The addresses are as shown in Figure 15.13. Note that address 3 contains the final destination of the frame (in another BSS).

Case 4

In this case, *To DS* = 1 and *From DS* = 1. This is the case in which the distribution system is also wireless. The frame is going from one AP to another AP in a wireless

Copyrighted material

Figure 15.13 *Addressing mechanism: case 3*

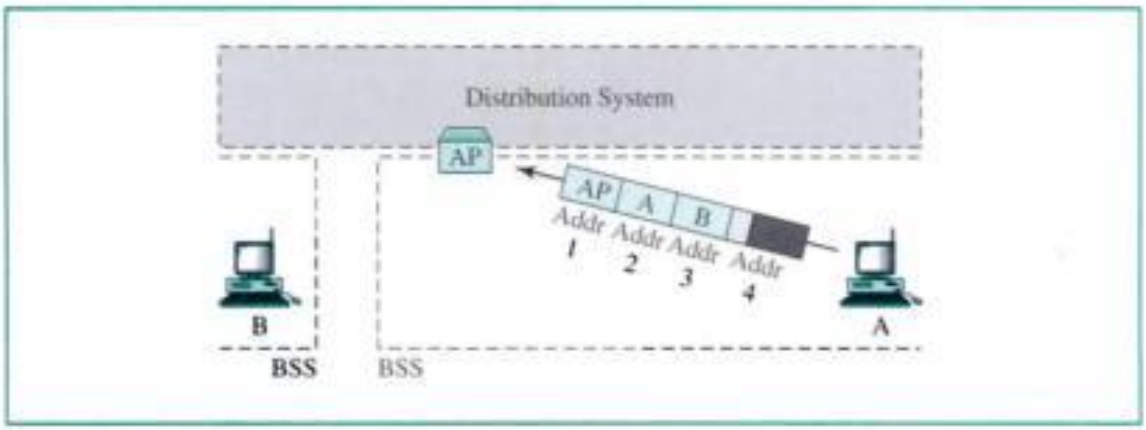

distribution system. We do not need to define addresses if the distribution system is a wired LAN because the frame in these cases has the format of a wired LAN frame (Ethernet, for example). Here, we need four addresses to define the original sender, the final destination, and two intermediate APs. Figure 15.14 shows the situation.

Figure 15.14 *Addressing mechanism: case 4*

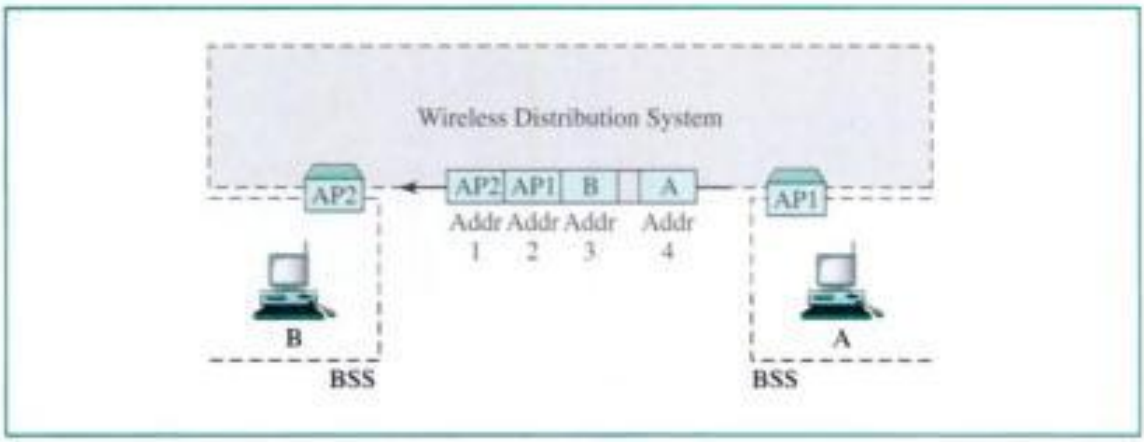

15.2 BLUETOOTH

Bluetooth is a wireless LAN technology designed to connect devices of different functions such as telephones, notebooks, computers (desktop and laptop), cameras, printers, coffee makers, and so on. A Bluetooth LAN is an ad hoc network, which means that the network is formed spontaneously; the devices, sometimes called gadgets, find each other and make a network called piconet. A Bluetooth LAN can even be connected to the Internet if one of the gadgets has this capability. A Bluetooth LAN, by nature, cannot be large. If there are many gadgets that try to connect, there is chaos.

Bluetooth technology has several applications. Peripheral devices of a computer can communicate with the computer through this technology (wireless mouse or keyboard).

Copyrighted material

Monitoring devices can communicate with sensor devices in a small health care center. Home security devices can use this technology to connect different sensors to the main security controller. Conference attendees can synchronize their palmtop computers at a conference.

Bluetooth was originally started as a project by the Ericsson Company. It is named for Harald Blaatand, the king of Denmark (940-981) who united Denmark and Norway. *Blaatand* translates to *Bluetooth* in English.

Today, Bluetooth technology is the implementation of a protocol defined by the IEEE 802.15 standard. The standard defines a wireless personal-area network (PAN) operable in an area the size of a room or a hall.

Architecture

Bluetooth defines two types of networks: piconets and scatternet.

Piconets

A Bluetooth network is called a **piconet,** or a small net. A piconet can have up to eight stations, one of which is called the **master;** the rest are called **slaves.** All the slave stations synchronize their clocks and hopping sequence with the master slave. Note that a piconet can have only one master station. The communication between the master and the slaves can be one-to-one or one-to-many. Figure 15.15 shows a piconet.

Figure 15.15 *Piconet*

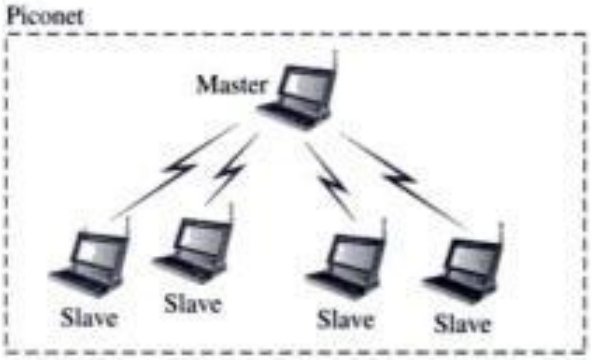

Although a piconet can have a maximum of seven slaves, an additional eight slaves can be in the *parked state*. A slave in a parked state is synchronized with the master, but cannot take part in communication until it is moved from the parked state. Because only eight stations can be active in a piconet, activating a station from the parked state means that an active station must go to the parked state.

Scatternet

Piconets can be combined to form what is called a **scatternet.** A slave station in one piconet can become the master in another piconet. This station can receive messages

Copyrighted material

from the master in the first piconet (as a slave) and, acting as a master, deliver it to slaves in the second piconet. A station can be a member of two piconets. Figure 15.16 illustrates a scatternet.

Figure 15.16 *Scatternet*

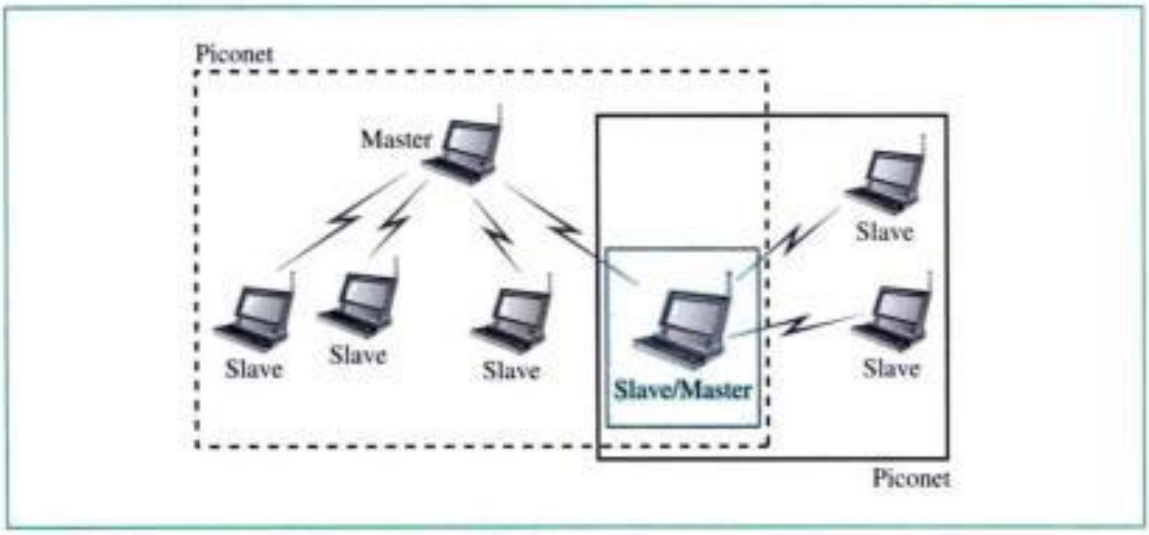

Bluetooth Devices

A Bluetooth device has a built-in short-range radio transmitter. The current data rate is 1 Mbps with a 2.4-GHz bandwidth. This means that there is a possibility of interference between the IEEE 802.11b wireless LANs and Bluetooth LANs.

Bluetooth Layers

Bluetooth uses several layers that do not exactly match those of the Internet model we have defined in this book. Figure 15.17 shows these layers.

Figure 15.17 *Bluetooth layers*

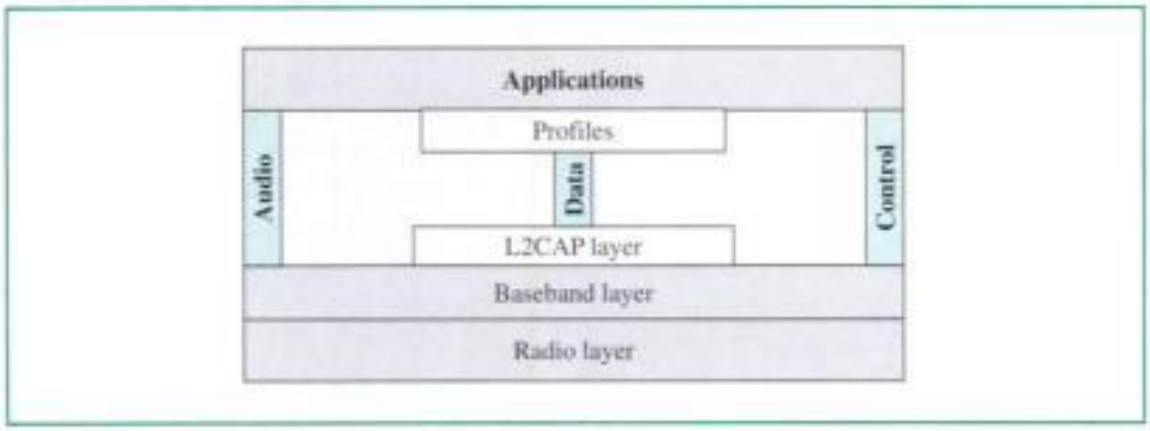

Copyrighted material

Radio Layer

The radio layer is roughly equivalent to the physical layer of the Internet model. Bluetooth devices are low-power and have a range of 10 m.

Band

Bluetooth uses a 2.4-GHz ISM band divided into 79 channels of 1 MHz each.

FHSS

Bluetooth uses the frequency-hopping spread spectrum method in the physical layer to avoid interference from other devices or other networks. Bluetooth hops 1600 times per second, which means that each device changes its modulation frequency 1600 times per second. A device uses a frequency for only 625 μs (1/1600 s) before it hops to another frequency; the dwell time is 625 μs.

Modulation

To transform bits to a signal, Bluetooth uses a sophisticated version of FSK, called GFSK (FSK with Gaussian bandwidth filtering; a discussion of this topic is beyond the scope of this book). FSK has a carrier frequency. Bit 1 is represented by a frequency deviation above the carrier; bit 0 is represented by a frequency deviation below the carrier. The carrier frequencies, in megahertz, are defined according to the following formula for each channel:

$$f_c = 2402 + n \qquad n = 0, 1, 2, 3, \ldots, 78$$

For example, the first channel uses carrier frequency 2402 MHz (2.402 GHz), and the second channel uses carrier frequency 2403 MHz (2.403 GHz).

Baseband Layer

The baseband layer is roughly equivalent to the MAC sublayer in LANs. The access method is TDMA (see Chapter 13). The master and slave communicate with each other using time slots. The length of a time slot is exactly the same as the dwell time, 625 μs. This means that during the time that one frequency is used, a sender sends a frame to a slave, or a slave sends a frame to the master. Note that the communication is only between the master and a slave; slaves cannot communicate directly with one another.

TDMA

Bluetooth uses a form of TDMA (see Chapter 13) that is called **TDD-TDMA (time-division duplexing TDMA).** TDD is a kind of half-duplex communication in which the slave and receiver send and receive data, but not at the same time (half-duplex); however, the communication for each direction uses different hops. This is similar to walkie-talkies using different carrier frequencies.

Single-Slave Communication If the piconet has only one slave, the TDMA operation is very simple. The time is divided into slots of 625 μs. The master uses even-numbered

Copyrighted material

slots (0, 2, 4, . . .); the slave uses odd-numbered slots (1, 3, 5, . . .). TDD-TDMA allows the master and the slave to communicate in half-duplex mode. In slot 0, the master sends, and the slave receives; in slot 1, the slave sends, and the master receives. The cycle is repeated. Figure 15.18 shows the concept.

Figure 15.18 *Single-slave communication*

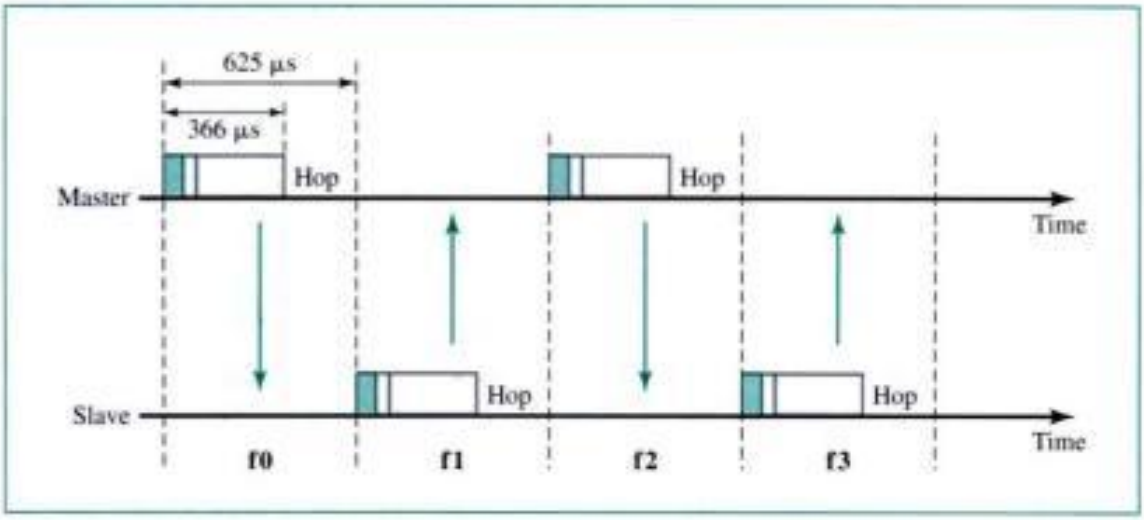

Multiple-Slave Communication The process is a little more complex if there is more than one slave in the piconet. Again, the master uses the even-numbered slots, but a slave sends in the next odd-numbered slot if the packet in the previous slot was addressed to it. All slaves listen on even-numbered slots, but only one slave sends in any odd-numbered slot. Figure 15.19 shows a scenario.

Figure 15.19 *Multiple-slave communication*

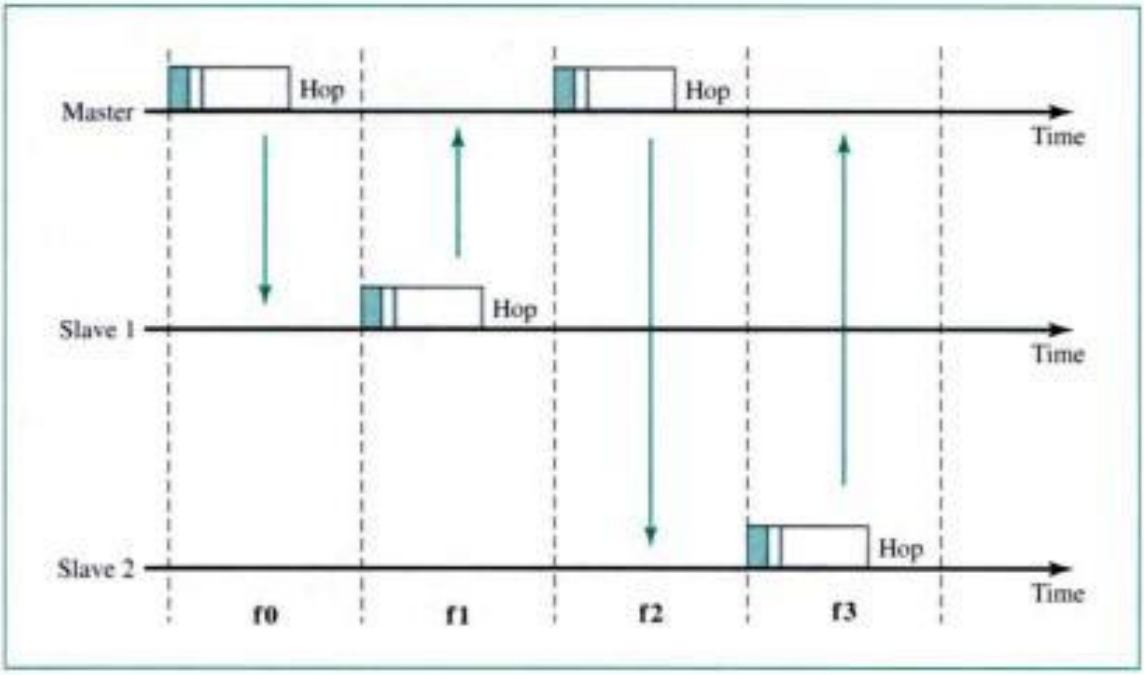

Copyrighted material

Let us elaborate on the figure.

1. In slot 0, the master sends a frame for slave 1.
2. In slot 1, only slave 1 sends a frame to the master because the previous frame was addressed to slave 1; other slaves are silent.
3. In slot 2, the master sends a frame for slave 2.
4. In slot 3, only slave 2 sends a frame to the master because the previous frame was addressed to slave 2; other slaves are silent.
5. The cycle continues.

We can say that this access method is similar to a poll/select operation with reservations. When the master selects a slave, it also polls it. The next time slot is reserved for the polled station to send its frame. If the polled slave has no frame to send, the channel is silent.

Physical Links

Two types of links can be created between a master and a slave: SCO links and ACL links.

SCO A **synchronous connection-oriented (SCO) link** is used when avoiding latency (delay in data delivery) is more important than integrity (error-free delivery). In SCO, a physical link is created between a master and a slave by reserving specific slots at regular intervals. The basic unit of connection is two slots, one for each direction. In SCO, if a packet is damaged, it is never retransmitted. SCO is used for real-time audio where avoiding delay is all-important. A slave can create up to three SCO links with the master, sending 64 Kbps digitized audio (PCM) in each link.

ACL An **asynchronous connectionless link (ACL)** is used when data integrity is more important than avoiding latency. In this type of link, if a payload encapsulated in the frame is corrupted, it is retransmitted. A slave returns an ACL frame in the available odd-numbered slot if and only if the previous slot has been addressed to it. ACL can use one, three, or more slots and can achieve a data rate up to 721 KbpsKbps.

Frame Format

A frame in the baseband layer can be one of three types: one-slot, three-slot, or five-slot. A slot, as we said before, is 625 μs. However, in a one-slot frame exchange, 259 μs is needed for hopping and control mechanisms. This means that a one-slot frame can last only 625 − 259, or 366 μs. With a 1-MHz bandwidth and 1 bit/Hz, the size of a one-slot frame is 366 bits.

A three-slot frame occupies three slots. However, since 259 μs is used for hopping, the length of the frame is $3 \times 625 - 259$ or 1616 μs or 1616 bits. A device that uses a three-slot frame remains at the same hop (at the same carrier frequency) for three slots. Even though only one hop number is used, three hop numbers are consumed. That means the hop number for each frame is equal to the first slot of the frame.

A five-slot frame also uses 259 bits for hopping, which means that the length of the frame is $5 \times 625 - 259$, or 2866, bits.

Figure 15.20 shows the format of the three frame types.

Copyrighted material

Figure 15.20 *Frame format types*

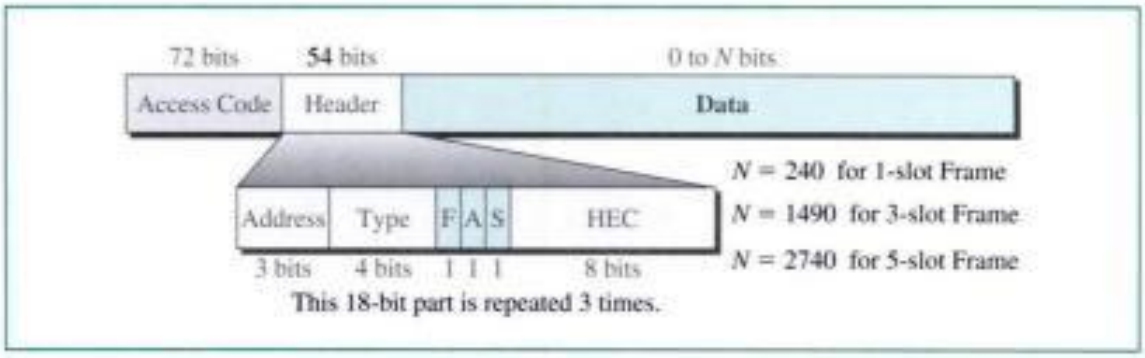

The following describes each field:

- **Access code.** This 72-bit field normally contains synchronization bits and the identifier of the master to distinguish the frame of one piconet from another.
- **Header.** This 54-bit field is a repeated 18-bit pattern. Each pattern has the following subfields:
  - **Address.** The 3-bit address subfield can define up to seven slaves (1 to 7). If the address is zero, it is used for broadcast communication from the master to all slaves.
  - **Type.** The 4-bit type subfield defines the type of data coming from the upper layers. We discuss these types later.
  - **F.** This 1-bit subfield is for flow control. When set (1), it indicates that the device is unable to receive more frames (buffer is full).
  - **A.** This 1-bit subfield is for acknowledgment. Bluetooth uses Stop-and-Wait ARQ; 1 bit is enough for acknowledgment.
  - **S.** This 1-bit subfield holds a sequence number. Bluetooth uses Stop-and-Wait ARQ; 1 bit is enough for sequence numbering.
  - **HEC.** The 8-bit header error correction subfield is a checksum to detect errors in each 18-bit header section.

  The header has three 18-bit sections, which the sender creates exactly the same. The receiver compares these three sections, bit by bit. If each of the three corresponding bits is the same, the bit is accepted; if not, the majority opinion wins. This is a form of forward error correction (for the header only). This double error control is needed because the nature of the communication, via air, is very noisy. Note that there is no retransmission in this sublayer.
- **Payload.** This subfield can be 0 to 2740 bits long. It contains data or control coming from the upper layers.

L2CAP

The **Logical Link Control and Adaptation Protocol,** or **L2CAP** (L2 here means LL) is roughly equivalent to the LLC sublayer in LANs. It is used for data exchange on an ACL link; SCO channels do not use L2CAP. Figure 15.21 shows the format of the data packet in this level.

Copyrighted material

Figure 15.21 *L2CAP data packet format*

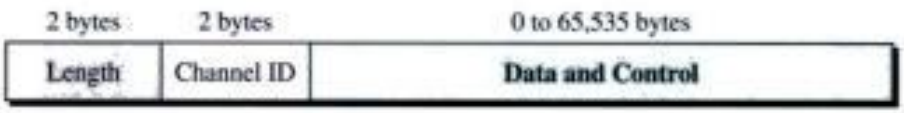

The 16-bit length field defines the size of the data, in bytes, coming from the upper layers. Data can be up to 65,535 bytes. The channel ID (CID) defines a unique identifier for the virtual channel created at this level (see below).

The L2CAP has several specific duties: multiplexing, segmentation and reassembly, quality of service, and group management.

Multiplexing

The L2CAP can do multiplexing. At the sender site, it accepts data from one of the upper-layer protocols, frames them, and delivers them to the baseband layer for delivery. At the receiver site, it accepts a frame from the baseband layer, extracts the data, and delivers them to the appropriate protocol layer. It creates a kind of virtual channel that we will discuss in future chapters on higher-level protocols.

Segmentation and Reassembly

The maximum size of the payload field in the baseband layer is 2774 bits, or 343 bytes. This includes 4 bytes to define the packet and packet length. Therefore, the size of the packet that can arrive from an upper layer can only be 339 bytes. However, application layers sometimes need to send a data packet that can be up to 65,535 bytes (an Internet packet, for example). The L2CAP divides these large packets into segments and adds extra information to define the location of the segments in the original packet. The L2CAP segments the packet at the source and reassembles them at the destination.

QoS

Bluetooth allows the stations to define a quality of service level. We discuss quality of service in Chapter 23. For the moment, it is enough to know that if no quality of service level is defined, Bluetooth defaults to what is called *best-effort* service; it will do its best under the circumstances.

Group Management

Another functionality of L2CAP is to allow devices to create a type of logical addressing between them. This is similar to multicasting. For example, two or three slave devices can be part of a multicast group to receive data from the master.

Other Upper Layers

Bluetooth defines several protocols for the upper layers that use the services of L2CAP; these protocols are specific for different purposes. They are very complex and involved and will not be discussed here.

Copyrighted material

15.3 KEY TERMS

access point (AP)
asynchronous connectionless link (ACL)
basic service set (BSS)
Bluetooth
BSS-transition mobility
complementary code keying (CCK)
direct sequence spread spectrum (DSSS)
distributed coordination function (DCF)
distributed interframe space (DIFS)
ESS-transition mobility
extended service set (ESS)
frequency-hopping spread spectrum (FHSS)
handshaking period
high-rate direct sequence spread spectrum (HR-DSSS)
IEEE 802.11
Logical Link Control and Adaptation Protocol (L2CAP)
master
network allocation vector (NAV)
no-transition mobility
orthogonal frequency-division multiplexing (OFDM)
piconet
point coordination function (PCF)
scatternet
short interframe space (SIFS)
slave
synchronous connection-oriented (SCO) link
time-division duplexing TDMA (TDD-TDMA)
wireless LAN

15.4 SUMMARY

- The IEEE 802.11 standard for wireless LANs defines two services: basic service set (BSS) and extended service set (ESS). An ESS consists of two or more BSSs; each BSS must have an access point (AP).
- The physical layer methods used by wireless LANs include frequency-hopping spread spectrum (FHSS), direct sequence spread spectrum (DSSS), orthogonal frequency-division multiplexing (OFDM), and high-rate direct sequence spread spectrum (HR-DSSS).
- FHSS is a signal generation method in which repeated sequences of carrier frequencies are used for protection against hackers.
- One bit is replaced by a chip code in DSSS.
- OFDM specifies that one source must use all the channels of the bandwidth.
- HR-DSSS is DSSS with an encoding method called complementary code keying (CCK).
- The wireless LAN access method is CSMA/CA.
- The network allocation vector (NAV) is a timer for collision avoidance.
- The MAC layer frame has nine fields. The addressing mechanism can include up to four addresses.
- Wireless LANs use management frames, control frames, and data frames.
- Bluetooth is a wireless LAN technology that connects devices (called gadgets) in a small area.
- A Bluetooth network is called a piconet. Multiple piconets form a network called a scatternet.

Copyrighted material

- The Bluetooth radio layer performs functions similar to those in the Internet model's physical layer.
- The Bluetooth baseband layer performs functions similar to those in the Internet model's MAC sublayer.
- A Bluetooth network consists of one master device and up to seven slave devices.
- A Bluetooth frame consists of data as well as hopping and control mechanisms. A frame is one, three, or five slots in length with each slot equal to 625 μs.

15.5 PRACTICE SET

Review Questions

1. What is the difference between a BSS and an ESS?
2. Discuss the three types of mobility in a wireless LAN.
3. What is FHSS?
4. What is DSSS?
5. How is OFDM different from FDM?
6. What is the access method used by wireless LANs?
7. What is the purpose of the NAV?
8. What are the three types of frames used by wireless LANs?
9. How does a control frame differ from a management frame?
10. Name two applications for a Bluetooth network.
11. Compare a piconet and a scatternet.
12. Match the layers in Bluetooth and the Internet model.
13. What are the two types of links between a Bluetooth master and a Bluetooth slave?
14. In multiple-slave communication, who uses the even-numbered slots and who uses the odd-numbered slots?
15. How much time in a Bluetooth one-slot frame is used for the hopping mechanism? What about a three slot frame and a five slot frame?
16. What is the purpose of L2CAP?

Multiple-Choice Questions

17. A wireless LAN using FHSS hops 10 times per cycle. If the bandwidth of the original signal is 10 MHz, the spread spectrum is _____ MHz.
    a. 10
    b. 100
    c. 1000
    d. 10,000

Copyrighted material

18. A wireless LAN using FHSS hops 10 times per cycle. If the bandwidth of the original signal is 10 MHz and 2 GHz is the lowest frequency, the highest frequency of the system is _____ GHz.
    a. 1.0
    b. 2.0
    c. 2.1
    d. 3.0
19. An FHSS wireless LAN has a spread spectrum of 1 GHz. The bandwidth of the original signal is 250 MHz, and there are _____ hops per cycle.
    a. 1
    b. 2
    c. 3
    d. 4
20. A wireless LAN using DSSS with an 8-bit chip code needs _____ MHz for sending data that originally required a 10-MHz bandwidth.
    a. 2
    b. 8
    c. 20
    d. 80
21. A wireless LAN using DSSS with _____-bit chip code needs 320 MHz for sending data that originally required a 20-MHz bandwidth.
    a. A 2
    b. An 8
    c. A 16
    d. A 32
22. A wireless LAN using DSSS with a 4-bit chip code needs 10 MHz for sending data that originally required a _____-MHz bandwidth.
    a. 2.5
    b. 20
    c. 25
    d. 40
23. In an ESS the _____ station is not mobile.
    a. AP
    b. Server
    c. BSS
    d. None of the above
24. In an ESS the _____ stations are part of a wired LAN.
    a. AP
    b. Server
    c. BSS
    d. All the above

Copyrighted material

25. A station with _____ mobility can move from one BSS to another.
    a. No-transition
    b. BSS-transition
    c. ESS-transition
    d. (b) and (c)
26. A station with _____ mobility can move from one ESS to another.
    a. No-transition
    b. BSS-transition
    c. ESS-transition
    d. (b) and (c)
27. A station with _____ mobility is either stationary or moving only inside a BSS.
    a. No-transition
    b. BSS
    c. ESS
    d. (a) and (b)
28. A _____ frame usually precedes a CTS frame.
    a. DIFS
    b. SIFS
    c. RTS
    d. Any of the above
29. A _____ frame usually precedes an RTS frame.
    a. DIFS
    b. CIFS
    c. CTS
    d. None of the above
30. Stations do not sense the medium during _____ time.
    a. RTS
    b. CTS
    c. SIFS
    d. NAV
31. Wireless transmission is _____ prone to error than/as wired transmission.
    a. More
    b. Less
    c. Half as
    d. None of the above
32. Which MAC sublayer does IEEE 802.11 define?
    a. LLC
    b. PCF
    c. DCF
    d. (b) and (c)

Copyrighted material

33. What is the basic access method for wireless LANs as defined by IEEE 802.11?
    a. LLC
    b. DCF
    c. PCF
    d. BFD
34. The access method for wireless LANs as defined by IEEE 802.11 is based on _____.
    a. CSMA
    b. CSMA/CD
    c. CSMA/CA
    d. Token passing
35. FHSS, DSSS, and OFDM are _____ layer specifications.
    a. Physical
    b. Data link
    c. Network
    d. Transport
36. In the _____ method, the sender hops from frequency to frequency in a specific order.
    a. FHSS
    b. DSSS
    c. OFDM
    d. HR-DSSS
37. A wireless LAN uses _____ frames for acknowledgment.
    a. Management
    b. Control
    c. Data
    d. None of the above
38. A wireless LAN uses _____ frames for the initial communication between stations and the access points.
    a. Management
    b. Control
    c. Data
    d. None of the above
39. A Bluetooth network can have _____ master(s).
    a. One
    b. Two
    c. Three
    d. Eight
40. _____ combine to form a scatternet.
    a. BSSs
    b. ESSs
    c. APs
    d. Piconets

Copyrighted material

41. Bluetooth uses _____ in the physical layer.
    a. FHSS
    b. DSSS
    c. DHSS
    d. OFDM
42. A Bluetooth frame needs _____ μs for hopping and control mechanisms.
    a. 625
    b. 259
    c. 3
    d. A multiple of 259

Exercises

43. Use Table 15.4 to compare and contrast the three types of mobility for a station defined in IEEE 802.11.

Table 15.4 *Exercise 43*

Types of Mobility	*Movement Inside BSS*	*Movement Between BSSs*	*Movement Between ESSs*
No transition			
BSS transition			
ESS transition			

44. Compare and contrast CSMA/CD with CSMA/CA.
45. Use Table 15.5 to compare and contrast the fields in IEEE 802.3 and 802.11.

Table 15.5 *Exercise 45*

Fields	*IEEE 802.3 Field Size*	*IEEE 802.11 Field Size*
Destination address		
Source address		
Address 1		
Address 2		
Address 3		
Address 4		
FC		
D/ID		
SC		
PDU length		
Data and padding		
Frame body		
FCS (CRC)		

Copyrighted material

Copyrighted material

CHAPTER 16

Connecting LANs, Backbone Networks, and Virtual LANs

LANs do not normally operate in isolation. They are connected to one another or to the Internet. To connect LANs, or segments of LANs, we use connecting devices. Connecting devices can operate in different layers of the Internet model. In this chapter, we discuss only those that operate in the physical and data link layer; we discuss those that operate in the first three layers in Chapter 19.

After discussing some connecting devices, we show how they are used to create backbone networks. Finally, we discuss virtual local area networks (VLANs).

16.1 CONNECTING DEVICES

There are five kinds of **connecting devices:** repeaters, hubs, bridges, and two- and three-layer switches. Repeaters and hubs operate in the first layer of the Internet model. Bridges and two-layer switches operate in the first two layers. Routers and three-layer switches operate in the first three layers. Figure 16.1 shows the layers in which each device operates.

Figure 16.1 *Connecting devices*

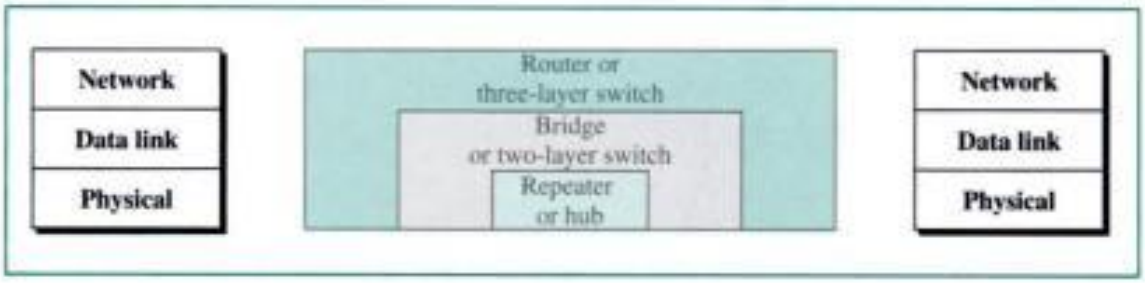

Repeaters

A **repeater** is a device that operates only in the physical layer. Signals that carry information within a network can travel a fixed distance before attenuation endangers the integrity of the data. A repeater receives a signal and, before it becomes too weak or

Copyrighted material

corrupted, regenerates the original bit pattern. The repeater then sends the refreshed signal. A repeater can extend the physical length of a LAN, as shown in Figure 16.2.

Figure 16.2 *Repeater*

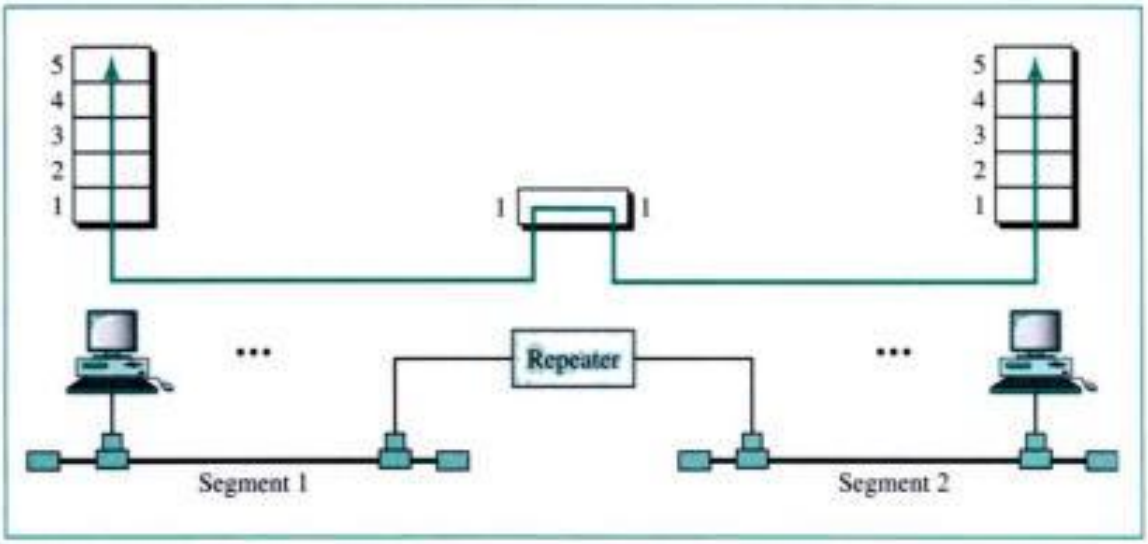

A repeater does not actually connect two LANs; it connects two segments of the same LAN. The segments connected are still part of one single LAN. A repeater is not a device that can connect two LANs of different protocols.

A repeater connects segments of a LAN.

A repeater can overcome the 10Base5 Ethernet length restriction. In this standard, the length of the cable is limited to 500 m. To extend this length, we divide the cable into segments and install repeaters between segments. Note that the whole network is still considered one LAN, but the portions of the network separated by repeaters are called **segments.** The repeater acts as a two-port node, but operates only in the physical layer. When it receives a frame from any of the ports, it regenerates and forwards it to the other port.

A repeater forwards every frame; it has no filtering capability.

It is tempting to compare a repeater to an amplifier, but the comparison is inaccurate. An **amplifier** cannot discriminate between the intended signal and noise; it amplifies equally everything fed into it. A repeater does not amplify the signal; it regenerates the signal. When it receives a weakened or corrupted signal, it creates a copy, bit for bit, at the original strength.

A repeater is a regenerator, not an amplifier.

Copyrighted material

The location of a repeater on a link is vital. A repeater must be placed so that a signal reaches it before any noise changes the meaning of any of its bits. A little noise can alter the precision of a bit's voltage without destroying its identity (see Fig. 16.3). If the corrupted bit travels much farther, however, accumulated noise can change its meaning completely. At that point, the original voltage is not recoverable, and the error needs to be corrected. A repeater placed on the line before the legibility of the signal becomes lost can still read the signal well enough to determine the intended voltages and replicate them in their original form.

Figure 16.3 *Function of a repeater*

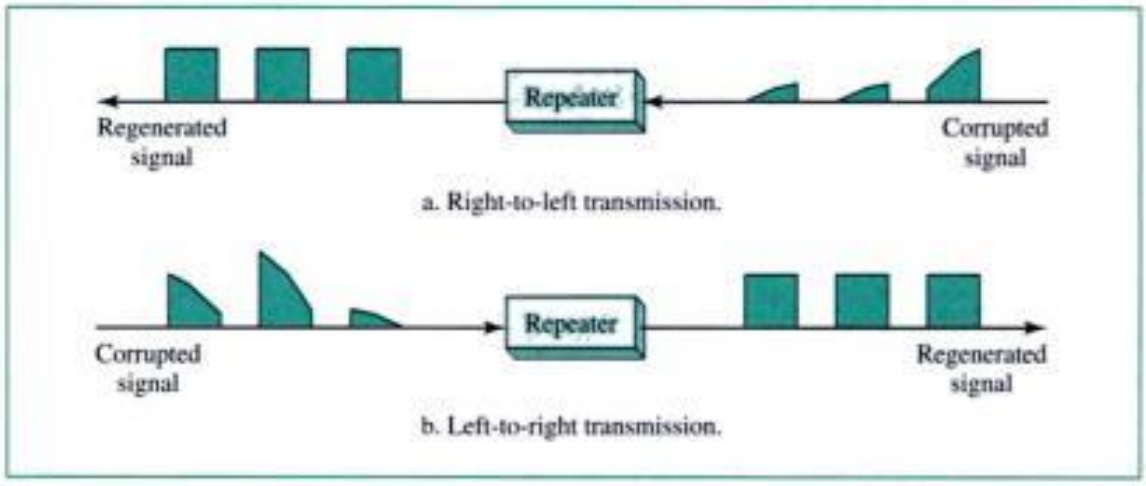

Hubs

Although, in a general sense, the word *hub* can refer to any connecting device, it does have a specific meaning. A **hub** is actually a multiport repeater. It is normally used to create connections between stations in a physical star topology. We have seen examples of hubs in some Ethernet implementations (10Base-T, for example). However, hubs can also be used to create multiple levels of hierarchy, as shown in Figure 16.4.

The hierarchical use of hubs removes the length limitation of 10Base-T (100 m).

Figure 16.4 *Hubs*

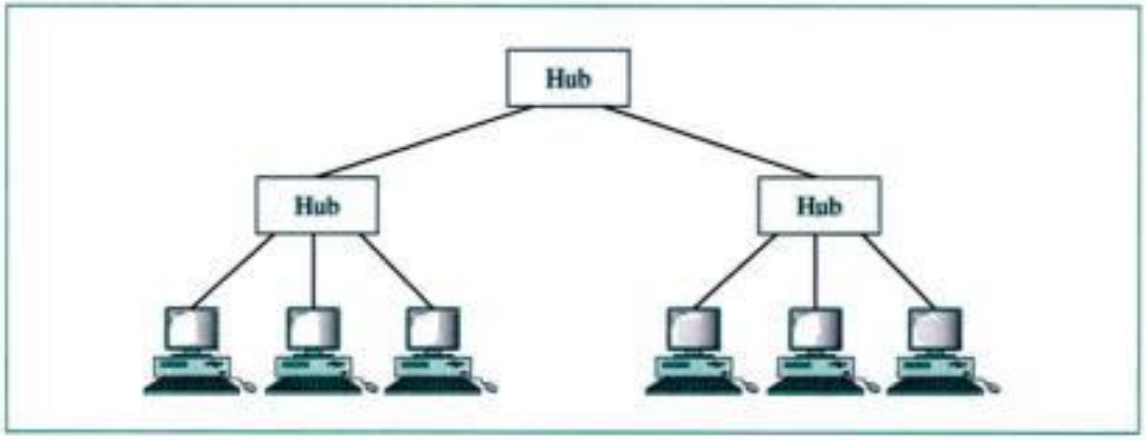

Copyrighted material

Bridges

A **bridge** operates in both the physical and the data link layers. As a physical-layer device, it regenerates the signal it receives. As a data link layer device, the bridge can check the physical (MAC) addresses (source and destination) contained in the frame.

Filtering

One may ask, What is the difference in functionality between a bridge and a repeater? A bridge has **filtering** capability. It can check the destination address of a frame and decide if the frame should be forwarded or dropped. If the frame is to be forwarded, the decision must specify the port. A bridge has a table that maps addresses to ports.

A bridge has a table used in filtering decisions.

Let us give an example. In Figure 16.5, two LANs are connected by a bridge.

Figure 16.5 *Bridge*

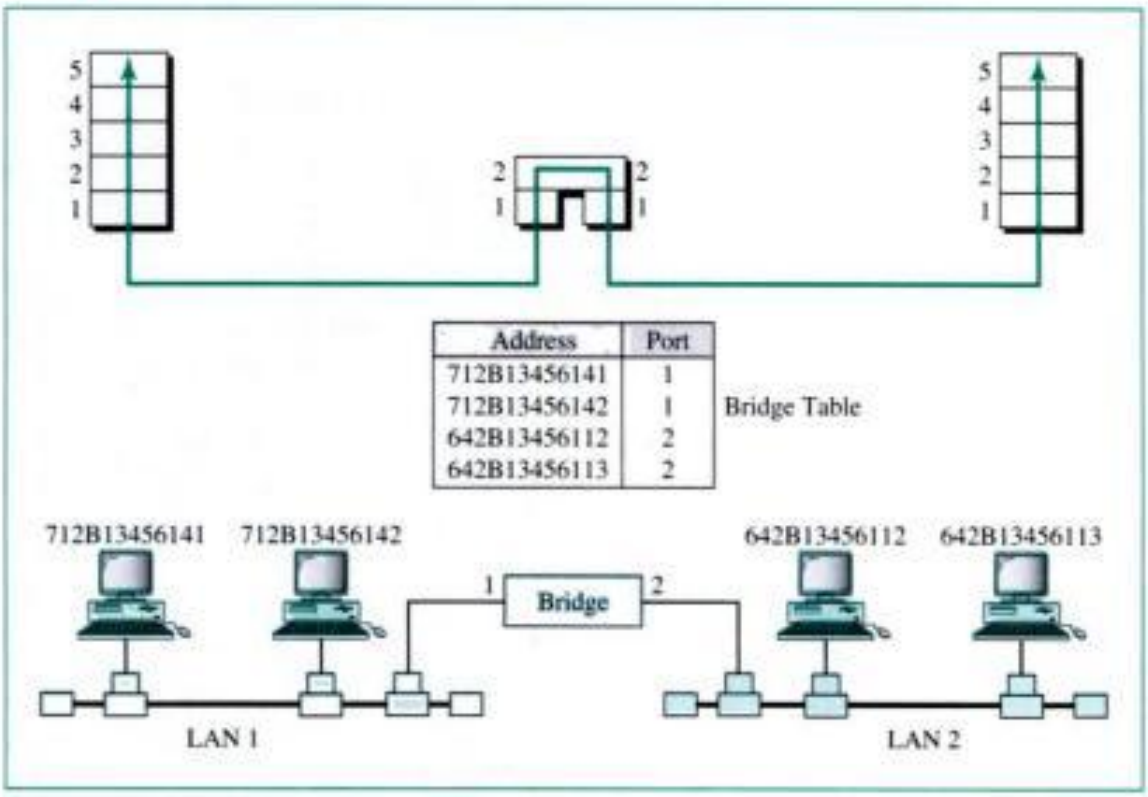

If a frame destined for station 712B1345642 arrives at port 1, the bridge consults its table to find the departing port. According to its table, frames for 712B1345642 leave through port 1; therefore, there is no need for forwarding; the frame is dropped. On the other hand, if a frame for 712B1345641 arrives at port 2, the departing port is port 1 and the frame is forwarded. In the first case, LAN 2 remains free of traffic; in the

Copyrighted material

second case, both LANs have traffic. In our example, we show a two-port bridge; in reality a bridge usually has more ports.

Note also that a bridge does not change the physical addresses contained in the frame.

A bridge does not change the physical (MAC) addresses in a frame.

Transparent Bridges

A **transparent bridge** is a bridge in which the stations are completely unaware of the bridge's existence. If a bridge is added or deleted from the system, reconfiguration of the stations is unnecessary. According to the IEEE 802.1d specification, a system equipped with transparent bridges must meet three criteria:

1. Frames must be forwarded from one station to another.
2. The forwarding table is automatically made by learning frame movements in the network.
3. Loops in the system must be prevented.

Forwarding A transparent bridge must correctly forward the frames, as discussed in the previous section.

Learning The earliest bridges had forwarding tables that were static. The systems administrator would manually enter each table entry during bridge setup. Although the process was simple, it was not practical. If a station was added or deleted, the table had to be modified manually. The same was true if a station's MAC address changed, which is not a rare event. For example, putting in a new network card means a new MAC address.

A better solution to the static table is a dynamic table that maps addresses to ports automatically. To make a table dynamic, we need a bridge that gradually learns from the frame movements. To do this, the bridge inspects both the destination and the source addresses. The destination address is used for the forwarding decision (table lookup); the source address is used for adding entries to the table and for updating purposes. Let us elaborate on this process using Figure 16.6.

1. When station A sends a frame to station D, the bridge does not have an entry for either D or A. The frame goes out from all three ports; the frame floods the network. However, by looking at the source address, the bridge learns that station A must be located on the LAN connected to port 1. This means that frames destined for A, in the future, must be sent out through port 1. The bridge adds this entry to its table. The table has its first entry now.
2. When station E sends a frame to station A, the bridge has an entry for A, so it forwards the frame only to port 1. There is no flooding. In addition, it uses the source address of the frame, E, to add a second entry to the table.
3. When station B sends a frame to C, the bridge has no entry for C, so once again it floods the network and adds one more entry to the table.
4. The process of learning continues as the bridge forwards frames.

Copyrighted material

Figure 16.6 *Learning bridge*

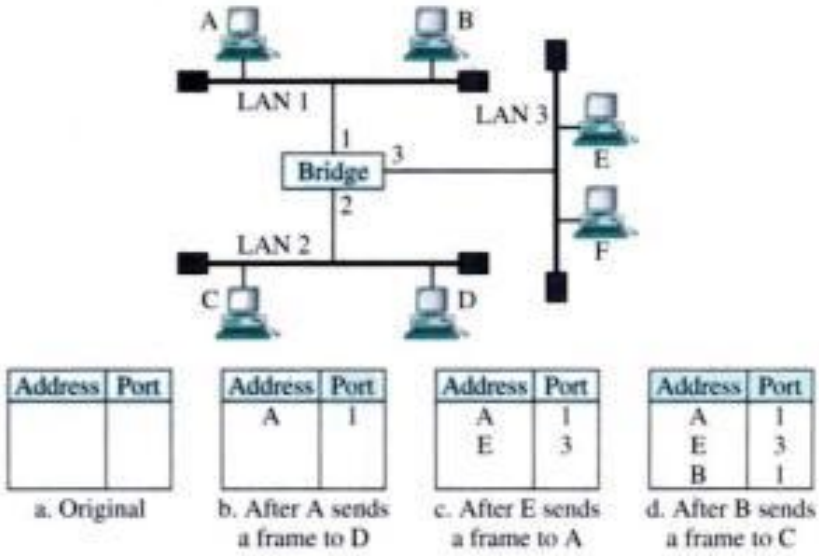

Loop Problem Transparent bridges work fine as long as there are no redundant bridges in the system. Systems administrators, however, like to have redundant bridges (more than one bridge between a pair of LANs) to make the system more reliable. If a bridge fails, another bridge takes over until the failed one is repaired or replaced. Redundancy can create loops in the system, which is very undesirable. Figure 16.7 shows a very simple example of a loop created in a system with two LANs connected by two bridges.

1. Station A sends a frame to station D. The tables of both bridges are empty. Both forward the frame and update their tables based on the source address A.
2. Now there are two copies of the frame on LAN 2. The copy sent out by bridge 1 is received by bridge 2, which does not have any information about the destination address D; it floods the bridge. The copy sent out by bridge 2 is received by bridge 1 and is sent out for lack of information about D. Note that each frame is handled separately because bridges, as two nodes on a network sharing the medium, use an access method such as CSMA/CD. The tables of both bridges are updated, but still there is no information for destination D.
3. Now there are two copies of the frame on LAN 1. Step 2 is repeated, and both copies flood the network.
4. The process continues on and on. Note that bridges are also repeaters and regenerate frames. So in each iteration, there are newly generated fresh copies of the frames.

To solve the looping problem, the IEEE specification requires that bridges use the spanning tree algorithm to create a loopless topology.

Spanning Tree

In graph theory, a **spanning tree** is a graph in which there is no loop. In a bridged LAN, this means creating a topology in which each LAN can be reached from any other LAN

Copyrighted material

Figure 16.7 *Loop problem*

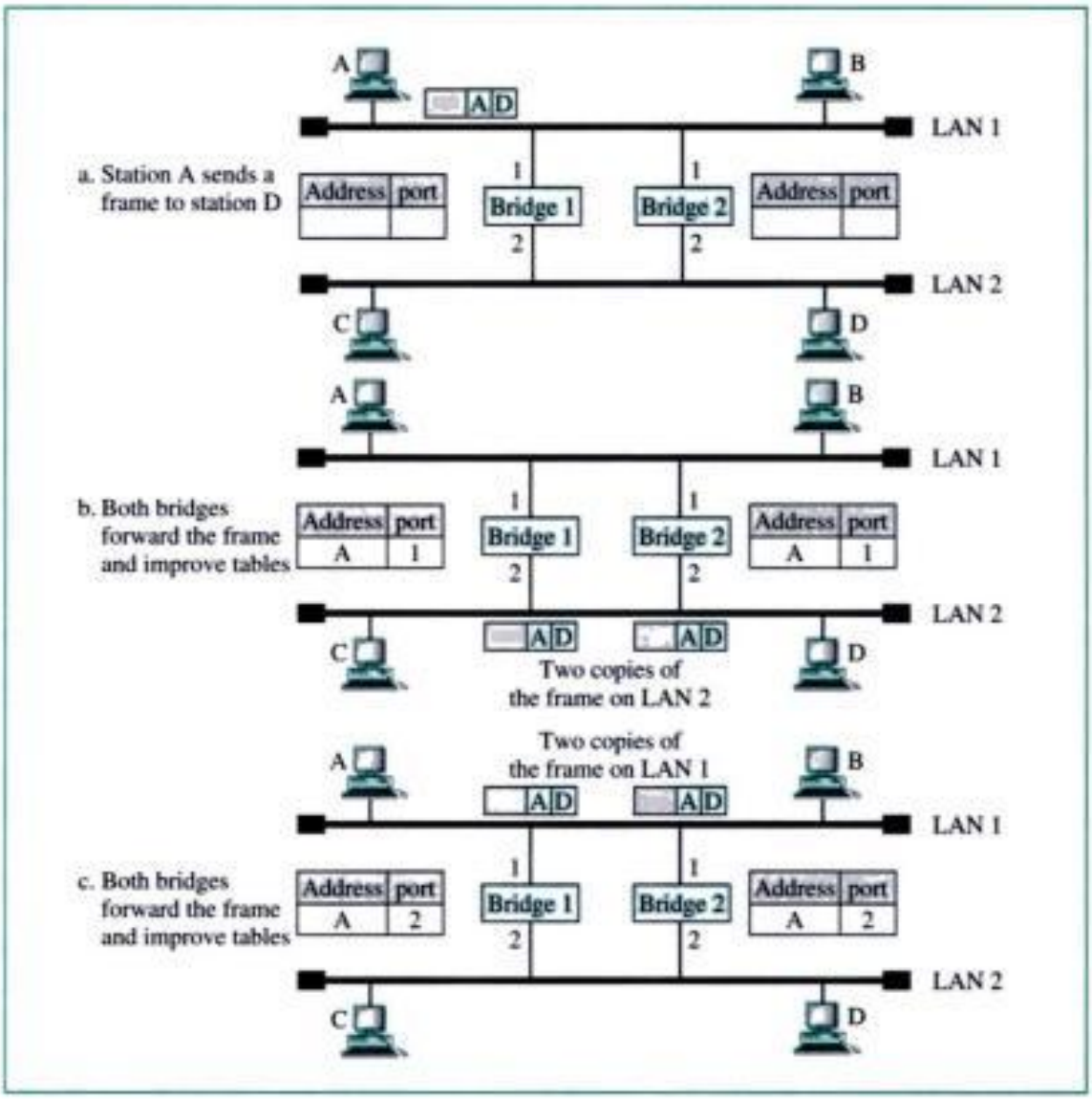

through one path only (no loop). We cannot change the physical topology of the system because of physical connections between cables and bridges, but we can create a logical topology that overlays the physical one. The process involves three steps:

1. Every bridge has a built-in ID. The one with the smallest ID is selected as the *root* bridge (as the root of the tree).
2. Mark one port of each bridge (except for the root bridge) as the *root* port. A root port is the port with the least-cost path from the bridge to the root bridge. The interpretation of the least-cost path is left up to the systems administrator. It may be the minimum number of hops (going from a bridge to a LAN); it may be the path with minimum delay or the path with maximum bandwidth. If two ports have the same least-cost value, the systems administrator just chooses one.
3. Choose a *designated* bridge for each LAN. A designated bridge has the least-cost path between the LAN and the root bridge. Make the corresponding port (the port

Copyrighted material

that connects the LAN to its designated bridge) the *designated* port. If two bridges have the same least-cost value, choose the one with the smaller ID.

4. Mark the root port and designated port as *forwarding* ports, the others as *blocking* ports. A **forwarding port** forwards a frame that it receives; a **blocking port** does not.

Let us give an example. The algorithm written in the C language can be found in Gilberg and Forouzan, *Data Structures: With Pseudocode Using C*, Thomson Learning. In Figure 16.8 we have four LANs and five bridges.

Figure 16.8 *Prior to spanning tree application*

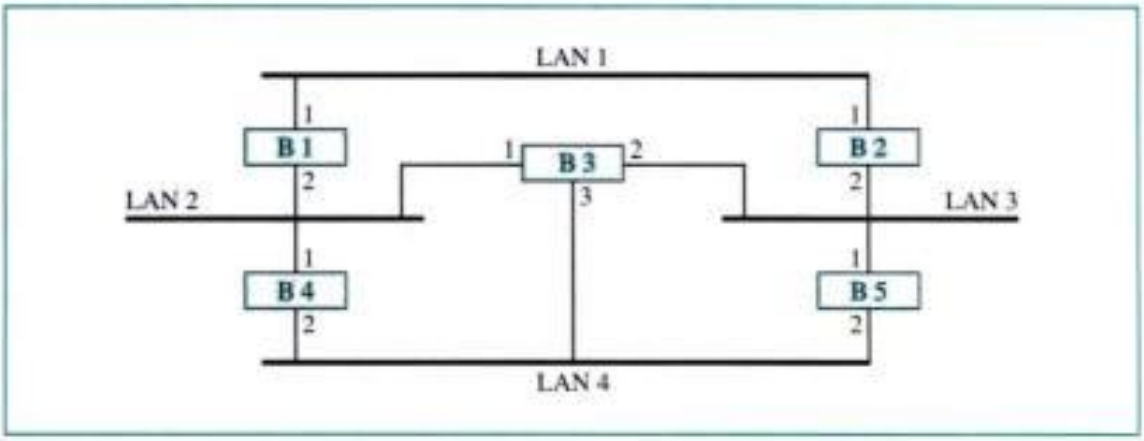

Figure 16.9 shows the first three steps. Assuming it has the least ID, we have chosen B1 as the root bridge. The root ports are marked with one star. The designated bridges have an arrow pointing to them from the corresponding LAN. Finally, designated ports are marked by two stars.

Figure 16.9 *Applying spanning tree*

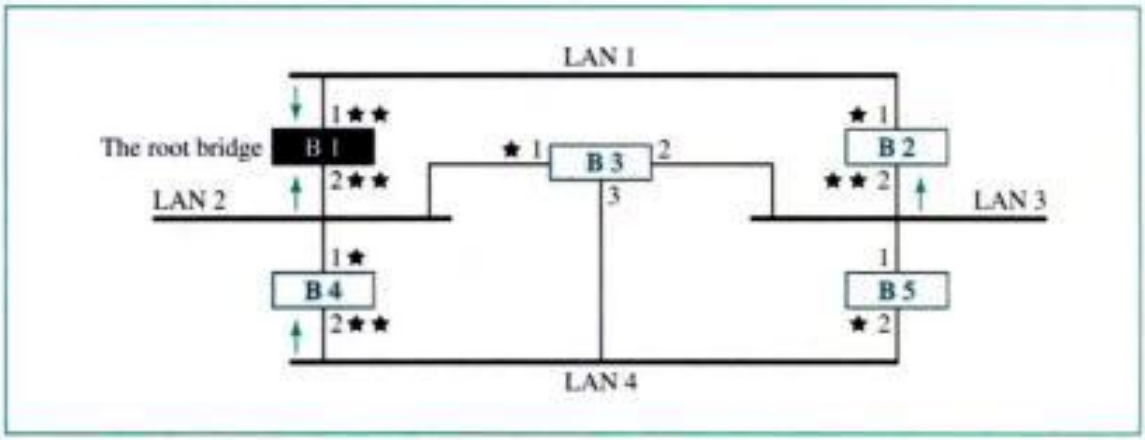

Now we can mark the root ports and the designated ports as forwarding ports; the others are blocking ports. In Figure 16.10 we show a blocking port with a broken line. The physical connection is there, but the bridge never forwards any frame from these ports.

Copyrighted material

Figure 16.10 *Forwarding ports and blocking ports*

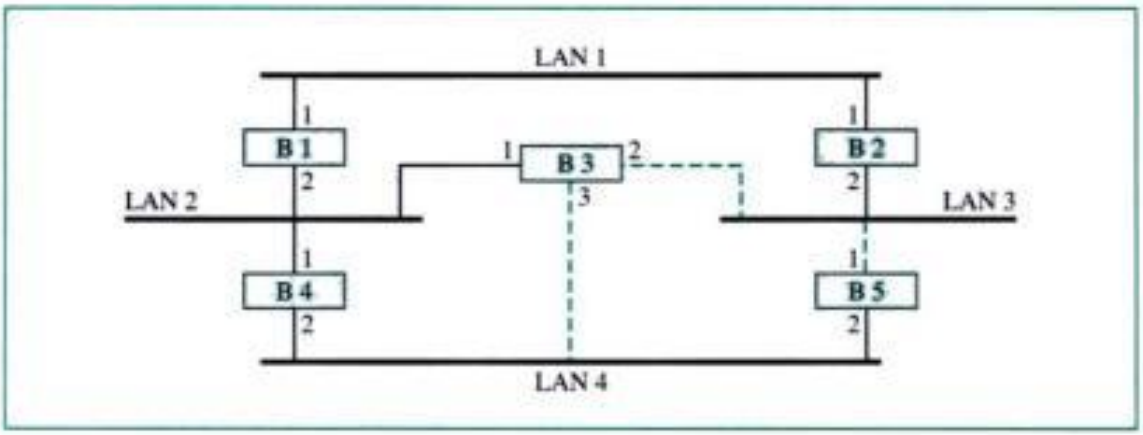

Note that there is only one single path from any LAN to any other LAN in the spanning tree system. This means there is only one single path from one LAN to any other LAN. No loops are created. You can prove to yourself that there is only one path from LAN 1 to LAN 2, LAN 3, or LAN 4. Similarly, there is only one path from LAN 2 to LAN 1, LAN 3, and LAN 4. The same is true for LAN 3 and LAN 4.

Dynamic Algorithm We have described the spanning tree algorithm as though it requires manual entries. This is not true. Each bridge is equipped with a software package that does this process dynamically. The bridges send special messages to each other, called bridge protocol data units (BPDUs), to update the spanning tree. The spanning tree is updated when there is a change in the system such as a failure of a bridge or an addition or deletion of bridges.

Source Routing Bridges

Another way to prevent loops in a system with redundant bridges is to use **source routing bridges.** A transparent bridge's duties includes filtering frames, forwarding, and blocking. In a system that has source routing bridges, these duties are performed by the source station and, to some extent, the destination station.

In source routing, a sending station defines the bridges that the frame must visit. The addresses of these bridges are included in the frame. In other words, the frame contains not only the source and destination addresses, but also the addresses of all bridges to be visited.

The source gets these bridge addresses through the exchange of special frames with the destination prior to sending the data frame.

Source routing bridges were designed by IEEE to be used with Token Ring LANs. These LANs are not very common today.

Bridges Connecting Different LANs

Theoretically a bridge should be able to connect LANs using different protocols at the data link layer, such as an Ethernet LAN to a wireless LAN. However, there are many issues to be considered:

- **Frame format.** Each LAN type has its own frame format (compare an Ethernet frame with a wireless LAN frame).

Copyrighted material

- **Maximum data size.** If an incoming frame's size is too large for the destination LAN, the data must be fragmented into several frames. The data then need to be reassembled at the destination. However, no protocol at the data link layer allows the fragmentation and reassembly of frames. We will see in Chapter 19 that this is allowed in the network layer. The bridge must therefore discard any frames too large for its system.
- **Data rate.** Each LAN type has its own data rate. (Compare the 10-Mbps data rate of an Ethernet with the 1-Mbps data rate of a wireless LAN.) The bridge must buffer the frame to compensate for this difference.
- **Bit order.** Each LAN type has its own strategy in the sending of bits. Some send the most significant bit in a byte first; others send the least significant bit first.
- **Security.** Some LANs, such as wireless LANs, implement security measures in the data link layer. Other LANs, such as Ethernet, do not. Security often involves encryption (see Chapter 29). When a bridge receives a frame from a wireless LAN, it needs to decrypt the message before forwarding it to an Ethernet LAN.
- **Multimedia support.** Some LANs support multimedia and the quality of services needed for this type of communication; others do not.

Two-Layer Switch

When we use the term *switch,* we must be careful because a switch can mean two different things. We must clarify the term by adding the level at which the device operates. We can have a two-layer switch or a three-layer switch. A **three-layer switch** is used at the network layer; it is a kind of router. The **two-layer switch** performs at the physical and data link layer.

A two-layer switch is a bridge, a bridge with many ports and a design that allows better (faster) performance. A bridge with a few ports can connect a few LANs together. A bridge with many ports may be able to allocate a unique port to each station, with each station on its own independent entity. This means no competing traffic (no collision as we saw in Ethernet). In this book, to avoid confusion, we use the term *bridge* for a two-layer switch.

More information about switches will be given in our discussion on routers in Chapter 19 and Appendix F.

Router and Three-Layer Switches

A discussion of **routers** and **three-layer switches** is postponed until we cover the network layer in Chapters 19, 21, and Appendix F.

16.2 BACKBONE NETWORKS

Some of the connecting devices discussed in this chapter can be used to connect LANs in a backbone network. A backbone network allows several LANs to be connected. In a backbone network, no station is directly connected to the backbone; the stations are

Copyrighted material

part of a LAN, and the backbone connects the LANs. The backbone is itself a LAN that uses a LAN protocol such as Ethernet; each connection to the backbone is itself another LAN.

Although many different architectures can be used for a backbone, we discuss only the two most common: the bus and the star.

Bus Backbone

In a **bus backbone,** the topology of the backbone is a bus. The backbone itself can use one of the protocols that supports a bus topology such as 10Base5 or 10Base2.

In a bus backbone, the topology of the backbone is a bus.

Bus backbones are normally used as a distribution backbone to connect different buildings in an organization. Each building can comprise either a single LAN or another backbone (normally a star backbone). A good example of a bus backbone is one that connects single- or multiple-floor buildings on a campus. Each single-floor building usually has a single LAN. Each multiple-floor building has a backbone (usually a star) that connects each LAN on a floor. A bus backbone can interconnect these LANs and backbones. Figure 16.11 shows an example of a bridge-based backbone with four LANs.

Figure 16.11 *Bus backbone*

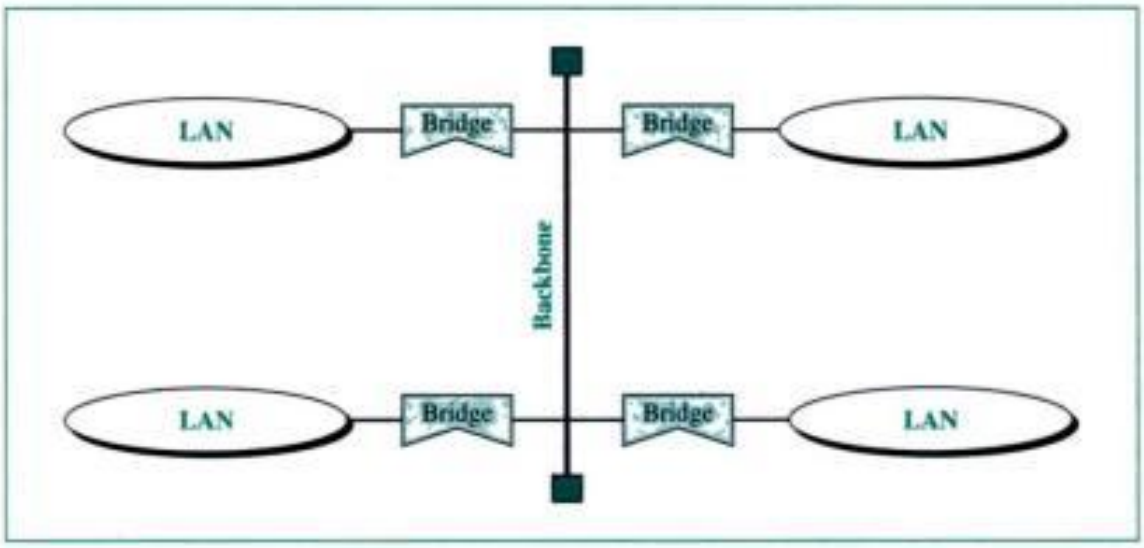

In the figure, if a station in a LAN needs to send a frame to another station in the same LAN, the corresponding bridge blocks the frame; the frame never reaches the backbone. However, if a station needs to send a frame to a station in another LAN, the bridge passes the frame to the backbone, which is received by the appropriate bridge and is delivered to the destination LAN. Each bridge connected to the backbone has a

Copyrighted material

table that shows the stations on the LAN side of the bridge. The blocking or delivery of a frame is based on the contents of this table.

Star Backbone

In a **star backbone,** sometimes called a collapsed or switched backbone, the topology of the backbone is a star. In this configuration, the backbone is just one switch (that is why it is called, erroneously, a collapsed backbone) that connects the LANs.

In a star backbone, the topology of the backbone is a star; the backbone is just one switch.

Figure 16.12 shows a star backbone. Note that, in this configuration, the switch does the job of the backbone and, at the same time connects the LANs.

Figure 16.12 *Star backbone*

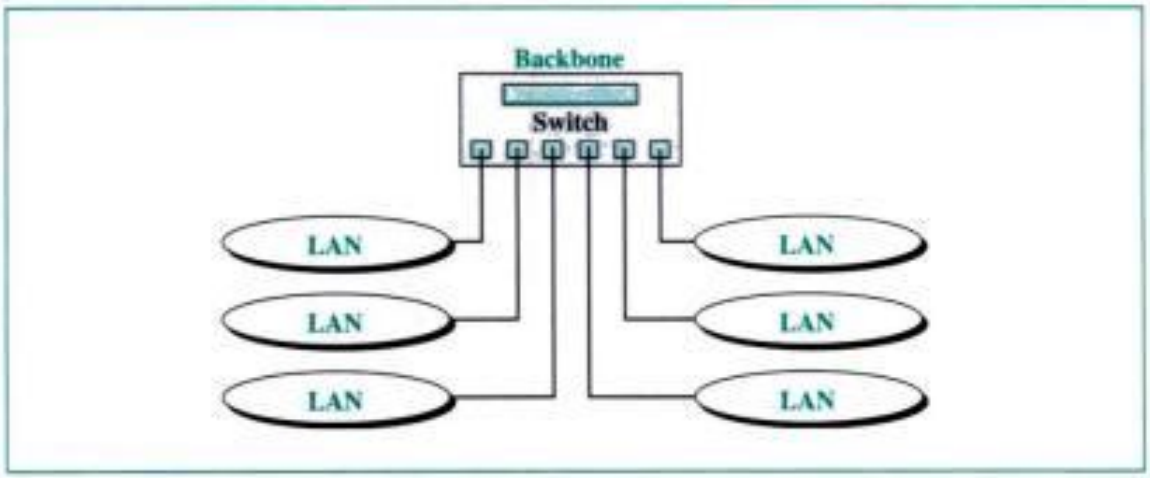

Star backbones are mostly used as a distribution backbone inside a building. In a multifloor building, we usually find one LAN that serves each particular floor. A star backbone connects these LANs. The backbone network, which is just a switch, can be installed in the basement or the first floor, and separate cables can run from the switch to each LAN. If the individual LANs have a physical star topology, either the hubs (or switches) can be installed in a closet on the corresponding floor, or all can be installed close to the switch. We often find a rack or chassis in the basement where the backbone switch and all hubs or switches are installed.

Connecting Remote LANs

Another common application for a backbone network is to connect remote LANs. This type of backbone network is useful when a company has several offices with LANs and needs to connect them. The connection can be done through bridges, sometimes called **remote bridges.** The bridges act as connecting devices connecting LANs and point-to-point networks, such as leased telephone lines or ADSL lines.

Copyrighted material

The point-to-point network in this case is considered a LAN without stations. The point-to-point link can use a protocol such as PPP. Figure 16.13 shows a backbone connecting remote LANs.

Figure 16.13 *Connecting remote LANs*

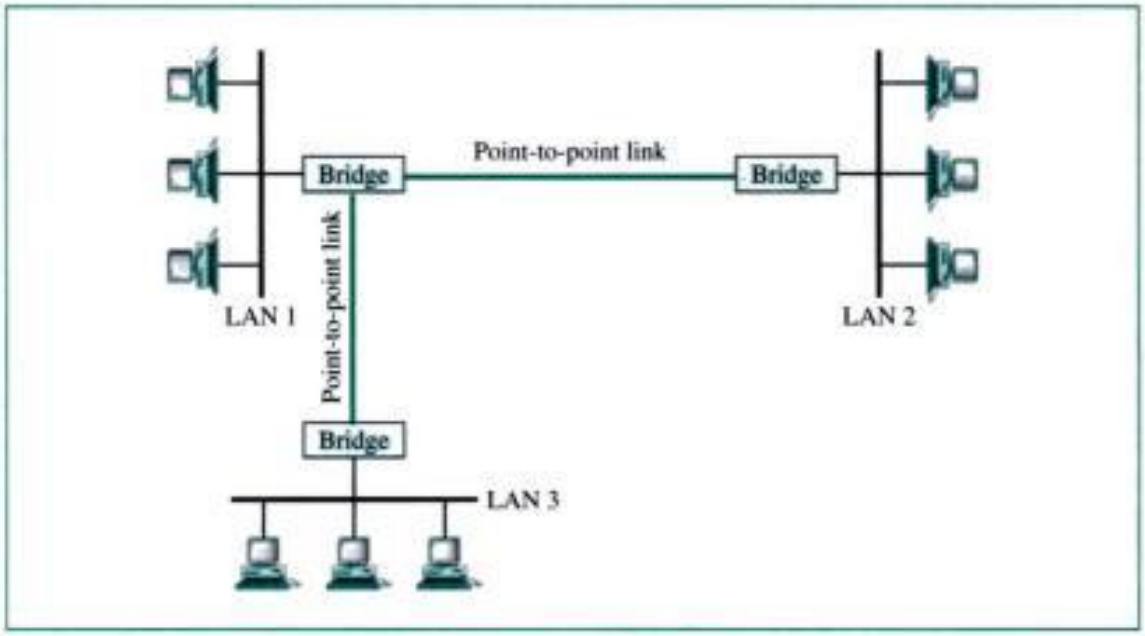

A point-to-point link acts as a LAN in a remote backbone connected by remote bridges.

16.3 VIRTUAL LANS

A station is considered part of a LAN if it physically belongs to that LAN. The criterion of membership is geographic. What happens if we need a virtual connection between two stations belonging to two different physical LANs? We can roughly define a **virtual local area network (VLAN)** as a local area network configured by software, not by physical wiring.

Let us use an example to elaborate on this definition. Figure 16.14 shows a switched LAN in an engineering firm in which 10 stations are grouped into three LANs that are connected by a switch. The first four engineers work together as the first group, the next three engineers work together as the second group, and the last three engineers work together as the third group. The LAN is configured to allow this arrangement.

But what would happen if the administrators needed to move two engineers from the first group to the third group to speed up the project being done by the third group? The LAN configuration would need to be changed. The network technician must rewire. The problem is repeated if in another week, the two engineers move back to their previous group. In a switched LAN, changes in the workgroup mean physical changes in the network configuration.

Copyrighted material

Figure 16.14 *A switch connecting three LANs*

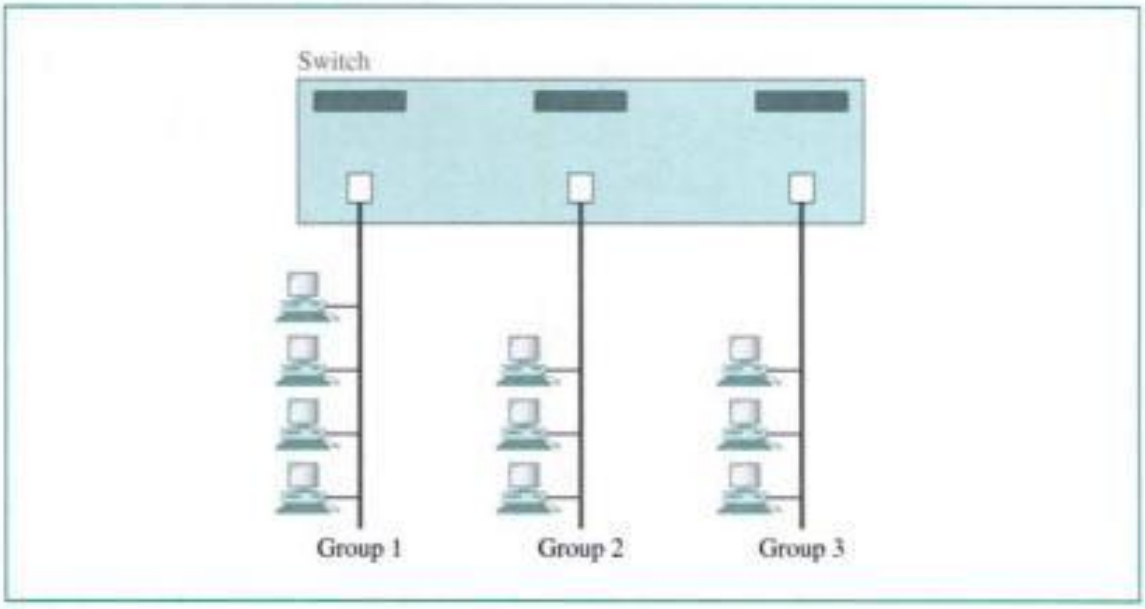

Figure 16.15 *A switch using VLAN software*

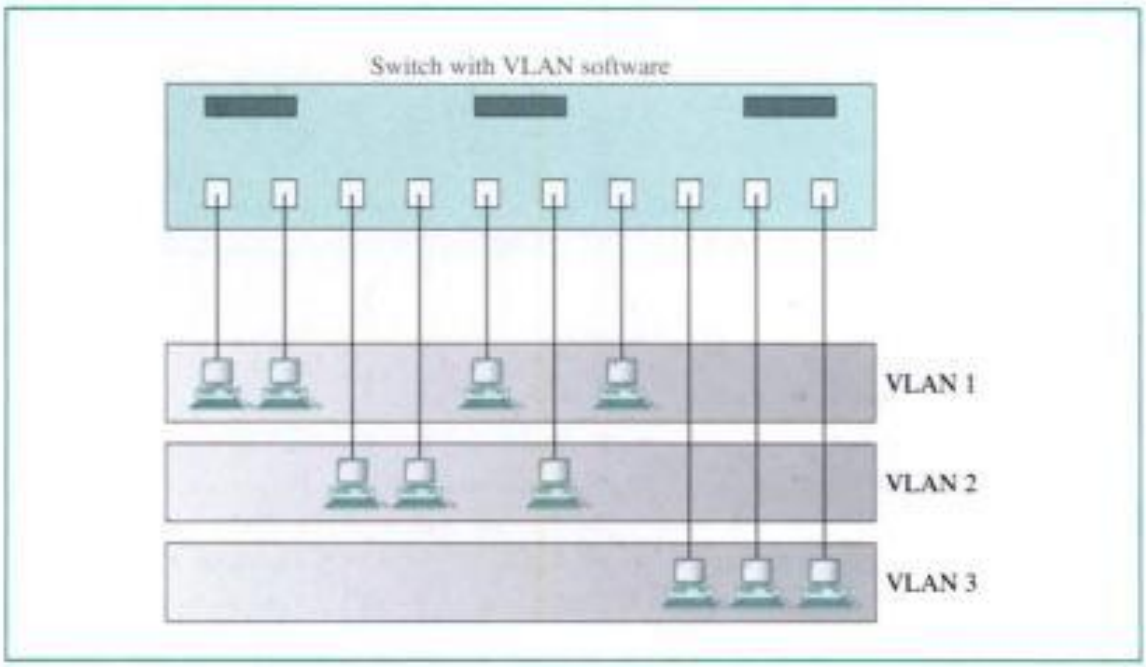

Figure 16.15 shows the same switched LAN divided into VLANs. The whole idea of VLAN technology is to divide a LAN into logical, instead of physical, segments. A LAN can be divided into several logical LANs called VLANs. Each VLAN is a workgroup in the organization. If a person moves from one group to another, there is no need to change the physical configuration. The group membership in VLANs is defined by software, not hardware. Any station can be logically moved to another VLAN. All members belonging to a VLAN can receive broadcast messages sent to that particular VLAN. This means if a station moves from VLAN 1 to VLAN 2, it receives broadcast messages sent to VLAN 2, but no longer receives broadcast messages sent to VLAN 1.

Copyrighted material

It is obvious that the problem in our previous example can easily be solved by using VLANs. Moving engineers from one group to another through software is easier than changing the configuration of the physical network.

VLAN technology even allows the grouping of stations connected to different switches in a VLAN. Figure 16.16 shows a backbone local area network with two switches and three VLANs. Stations from switches A and B belong to each VLAN.

Figure 16.16 *Two switches in a backbone using VLAN software*

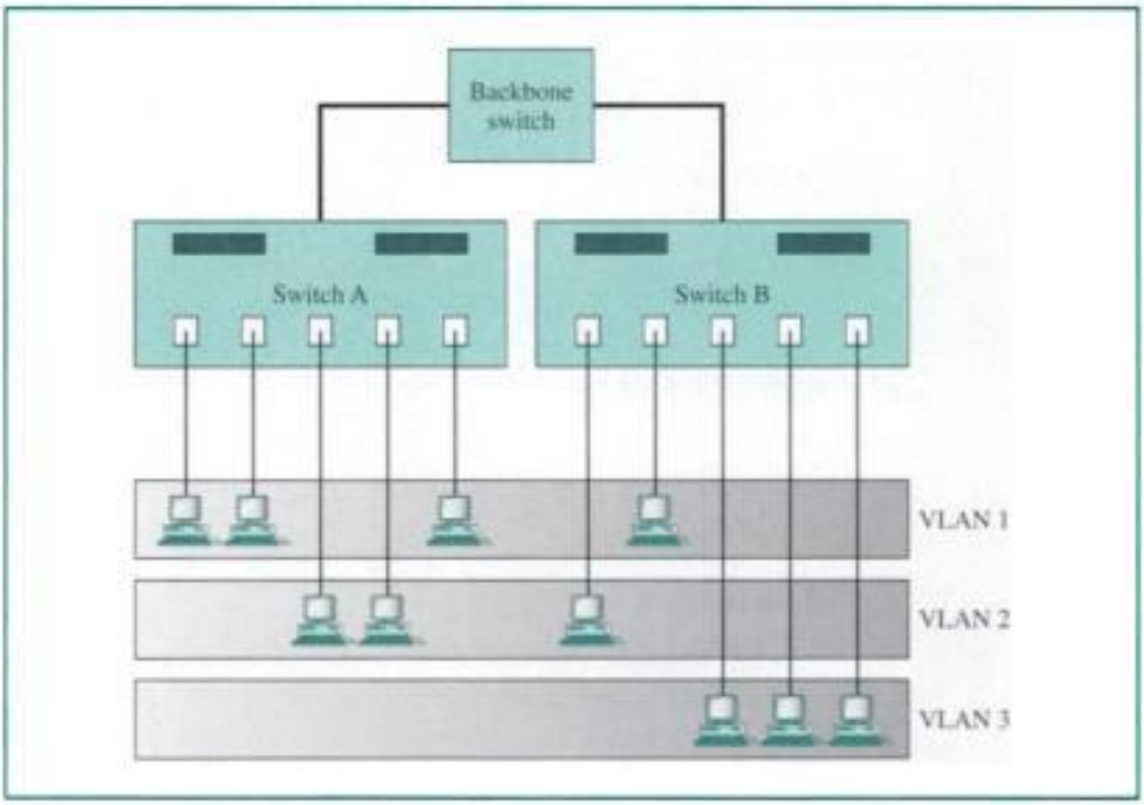

This is a good configuration for a company with two separate buildings. Each building can have its own switched LAN connected by a backbone. People in the first building and people in the second building can be in the same workgroup even though they are connected to different physical LANs.

From these three examples, we can define a VLAN characteristic:

VLANs create broadcast domains.

VLANs group stations belonging to one or more physical LANs into broadcast domains. The stations in a VLAN communicate with one another as though they belonged to a physical segment.

Membership

What characteristic can be used to group stations in a VLAN? Vendors use different characteristics such as port numbers, MAC addresses, IP addresses, IP multicast address, or a combination of two or more of the above.

Copyrighted material

Port Numbers

Some VLAN vendors use switch port numbers as a membership characteristic. For example, the administrator can define that stations connecting to ports 1, 2, 3, and 7 belong to VLAN 1; stations connecting to ports 4, 10, and 12 belong to VLAN 2; and so on.

MAC Addresses

Some VLAN vendors use the 48-bit MAC address as a membership characteristic. For example, the administrator can define that stations having MAC addresses E21342A12334 and F2A123BCD341 belong to VLAN 1.

IP Addresses

Some VLAN vendors use the 32-bit IP address (see Chapter 19) as a membership characteristic. For example, the administrator can define that stations having IP addresses 181.34.23.67, 181.34.23.72, 181.34.23.98, and 181.34.23.112 belong to VLAN 1.

Multicast IP Addresses

Some VLAN vendors use the multicast IP address (see Chapter 19) as a membership characteristic. Multicasting at the IP layer is now translated to multicasting at the data link layer.

Combination

Recently, the software available from some vendors allows all these characteristics to be combined. The administrator can choose one or more characteristics when installing the software. In addition, the software can be reconfigured to change the settings.

Configuration

How are the stations grouped into different VLANs? Stations are configured in one of three ways: manual, semiautomatic, and automatic.

Manual Configuration

In a manual configuration, the network administrator uses the VLAN software to manually assign the stations into different VLANs at setup. Later migration from one VLAN to another is also done manually. Note that this is not a physical configuration; it is a logical configuration. The term *manually* here means that the administrator types the port numbers, the IP addresses, or other characteristics using the VLAN software.

Automatic Configuration

In an automatic configuration, the stations are automatically connected or disconnected from a VLAN using criteria defined by the administrator. For example, the administrator can define the project number as the criterion for being a member of a group. When a user changes the project, he or she automatically migrates to a new VLAN.

Copyrighted material

Semiautomatic Configuration

A semiautomatic configuration is somewhere between a manual configuration and an automatic configuration. Usually, the initializing is done manually, with migrations done automatically.

Communication Between Switches

In a multiswitched backbone, each switch must know not only which station belongs to which VLAN, but also the membership of stations connected to other switches. For example, in Figure 16.16, switch A must know the membership status of stations connected to switch B, and switch B must know the same about switch A. Three methods have been devised for this purpose: table maintenance, frame tagging, and time-division multiplexing.

Table Maintenance

In this method, when a station sends a broadcast frame to its group members, the switch creates an entry in a table and records station membership. The switches send their tables to each other periodically for updating.

Frame Tagging

In this method, when a frame is traveling between switches, an extra header is added to the MAC frame to define the destination VLAN. The frame tag is used by the receiving switches to determine the VLANs to be receiving the broadcast message.

Time-Division Multiplexing (TDM)

In this method, the connection (trunk) between switches is divided into timeshared channels (see TDM in Chapter 6). For example, if the total number of VLANs in a backbone is five, each trunk is divided into five channels. The traffic destined for VLAN 1 travels in channel 1, the traffic destined for VLAN 2 travels in channel 2, and so on. The receiving switch determines the destination VLAN by checking the channel from which the frame arrived.

IEEE Standard

In 1996, the IEEE 802.1 subcommittee passed a standard called 802.1Q that defines the format for frame tagging. The standard also defines the format to be used in multiswitched backbones and enables the use of multivendor equipment in VLANs. IEEE 802.1Q has opened the way for further standardization in other issues related to VLANs. Most vendors have already accepted the standard.

Advantages

There are several advantages to using VLANs.

Cost and Time Reduction

VLANs can reduce the migration cost of stations going from one group to another. Physical reconfiguration takes time and is costly. Instead of physically moving one station to

Copyrighted material

another segment or even to another switch, it is much easier and quicker to move it using software.

Creating Virtual Workgroups

VLANs can be used to create virtual workgroups. For example, in a campus environment, professors working on the same project can send broadcast messages to one another without the necessity of belonging to the same department. This can reduce traffic if the multicasting capability of IP was previously used.

Security

VLANs provide an extra measure of security. People belonging to the same group can send broadcast messages with the guaranteed assurance that users in other groups will not receive these messages.

16.4 KEY TERMS

amplifier
blocking port
bridge
bus backbone
connecting device
filtering
forwarding port
hub
remote bridge
repeater
router
segment
source routing bridge
spanning tree
star backbone
three-layer switch
transparent bridge
two-layer switch
virtual local area network (VLAN)

16.5 SUMMARY

- A repeater is a connecting device that operates in the physical layer of the Internet model. A repeater regenerates a signal, connects segments of a LAN, and has no filtering capability.
- A bridge is a connecting device that operates in the physical and data link layers of the Internet model.
- A transparent bridge can forward and filter frames and automatically build its forwarding table.
- A bridge can use the spanning tree algorithm to create a loopless topology.
- A backbone LAN allows several LANs to be connected.
- A backbone is usually a bus or a star.
- A virtual local area network (VLAN) is configured by software, not by physical wiring.
- Membership in a VLAN can be based on port numbers, MAC addresses, IP addresses, IP multicast addresses, or a combination of these features.

Copyrighted material

- VLANs are cost- and time-efficient, can reduce network traffic, and provide an extra measure of security.

16.6 PRACTICE SET

Review Questions

1. How is a repeater different from an amplifier?
2. What do we mean when we say that a bridge can filter traffic? Why is filtering important?
3. What is a transparent bridge?
4. How does a repeater extend the length of a LAN?
5. How is a hub related to a repeater?
6. What is the difference between a root bridge and a designated bridge?
7. What is the difference between a forwarding port and a blocking port?
8. What is the difference between a bus backbone and a star backbone?
9. How does a VLAN save a company time and money?
10. How does a VLAN provide extra security for a network?
11. How does a VLAN reduce network traffic?
12. What is the basis for membership in a VLAN?
13. How is TDM involved in VLAN communication?

Multiple-Choice Questions

14. Which of the following is a connecting device?
    a. Bridge
    b. Repeater
    c. Hub
    d. All the above
15. A bridge forwards or filters a frame by comparing the information in its address table to the frame's _____.
    a. Layer 2 source address
    b. Source node's physical address
    c. Layer 2 destination address
    d. Layer 3 destination address
16. A bridge can _____.
    a. Filter a frame
    b. Forward a frame
    c. Extend a LAN
    d. Do all the above

Copyrighted material

17. Repeaters function in the _____ layer(s).
    a. Physical (MAC)
    b. Data link
    c. Network
    d. (a) and (b)
18. A _____ is actually a multiport repeater.
    a. Bridge
    b. Router
    c. VLAN
    d. Hub
19. Bridges function in the _____ layer(s).
    a. Physical (MAC)
    b. Data link
    c. Network
    d. (a) and (b)
20. A repeater takes a weakened or corrupted signal and _____ it.
    a. Amplifies
    b. Regenerates
    c. Resamples
    d. Reroutes
21. A bridge has access to the _____ address of a station on the same network.
    a. Physical (MAC)
    b. Network
    c. Service access point
    d. All the above
22. A system with redundant bridges might have a problem with _____ in the system.
    a. Loops
    b. Filters
    c. Spanning trees
    d. All the above
23. A _____ bridge has the smallest ID.
    a. Root
    b. Designated
    c. Forwarding
    d. Blocking
24. The bridge with the least-cost path between the LAN and the root bridge is called the _____ bridge.
    a. Designated
    b. Forwarding
    c. Blocking
    d. (a) and (b)

Copyrighted material

25. A bridge never forwards frames out of the _____ port.
    a. Root
    b. Designated
    c. Forwarding
    d. Blocking
26. Which type of bridge builds and updates its tables from address information on frames?
    a. Simple
    b. Transparent
    c. (a) and (b)
    d. None of the above
27. VLAN technology divides a LAN into _____ groups.
    a. Physical
    b. Logical
    c. Multiplexed
    d. Framed
28. Which station characteristic can be used to group stations into a VLAN?
    a. Port numbers
    b. MAC addresses
    c. IP addresses
    d. All the above
29. In a VLAN, stations are separated into groups by _____.
    a. Physical methods
    b. Software methods
    c. Location
    d. Switches

Exercise

30. Complete the table in Figure 16.6 after each station has sent a packet to another station.
31. Create a system of 3 LANs with 4 bridges. The bridges (B1 to B4) connect the LANs as follows:
    a. B1 connects LAN 1 and LAN 2
    b. B1 connects LAN 1 and LAN 3
    c. B3 connects LAN 2 and LAN 3
    d. B4 connects LAN 1, LAN 2, and LAN 3

    Choose B1 as the root bridge. Show the forwarding and blocking ports after applying the spanning tree procedure.

Copyrighted material

Copyrighted material

CHAPTER 17

Cellular Telephone and Satellite Networks

We discussed wireless LANs in Chapter 15. Wireless technology is also used in cellular telephony and satellite networks. We discuss the former in this chapter as well as examples of channelization access methods (see Chapter 13). We also briefly discuss satellite networks, a technology that eventually will be linked to cellular telephony to access the Internet directly.

17.1 CELLULAR TELEPHONY

Cellular telephony is designed to provide communications between two moving units, called mobile stations (MSs), or between one mobile unit and one stationary unit, often called a land unit. A service provider must be able to locate and track a caller, assign a channel to the call, and transfer the channel from base station to base station as the caller moves out of range.

To make this tracking possible, each cellular service area is divided into small regions called cells. Each cell contains an antenna and is controlled by a small office, called the base station (BS). Each base station, in turn, is controlled by a switching office, called a **mobile switching center (MSC).** The MSC coordinates communication between all the base stations and the telephone central office. It is a computerized center that is responsible for connecting calls, recording call information, and billing (see Fig. 17.1).

Cell size is not fixed and can be increased or decreased depending on the population of the area. The typical radius of a cell is 1 to 12 miles. High-density areas require more geographically smaller cells to meet traffic demands than do lower-density areas. Once determined, cell size is optimized to prevent the interference of adjacent cell signals. The transmission power of each cell is kept low to prevent its signal from interfering with those of other cells.

Frequency-Reuse Principle

In general, neighboring cells cannot use the same set of frequencies for communication because it may create interference for the users located near the cell boundaries. However,

Copyrighted material

Figure 17.1 *Cellular system*

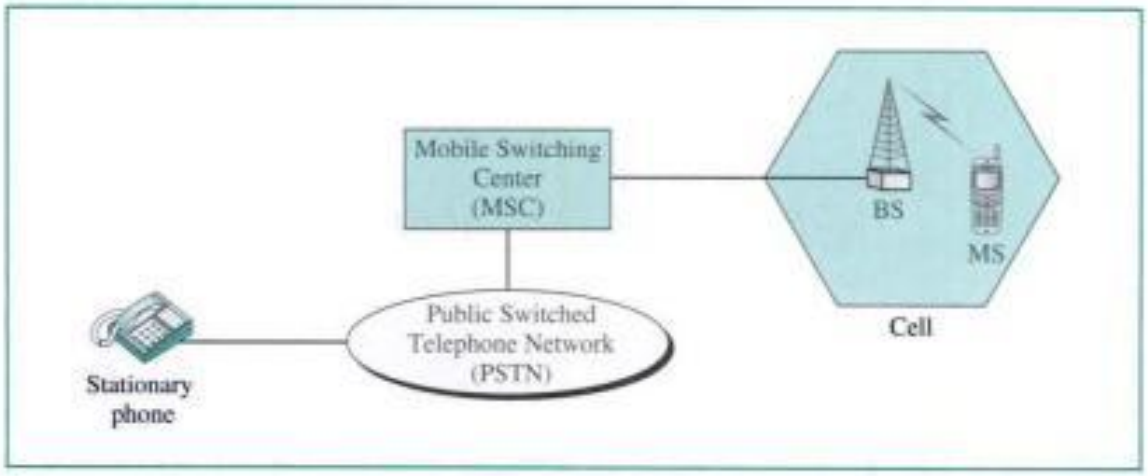

the set of frequencies available is limited, and frequencies need to be reused. A frequency reuse pattern is a configuration of N cells, N being the **reuse factor,** in which each cell uses a unique set of frequencies. When the pattern is repeated, the frequencies can be reused. There are several different patterns. Figure 17.2 shows two of them.

Figure 17.2 *Frequency reuse patterns*

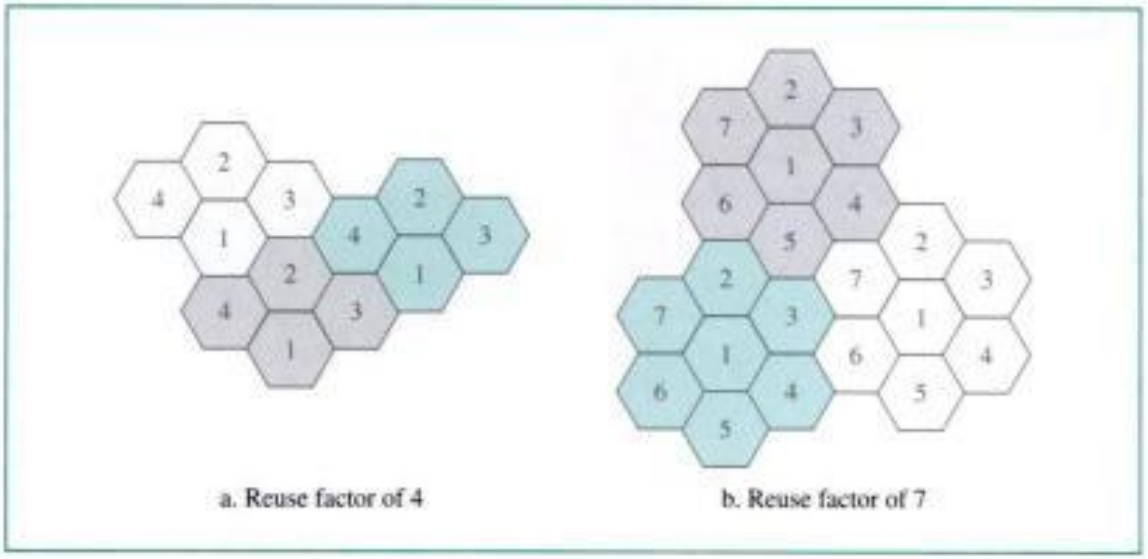

The cells with the same number in a pattern can use the same set of frequencies. We call these cells the *reusing cells*. As the figure shows, in a pattern with reuse factor 4, only one cell separates the cells using the same set of frequencies. In the pattern with reuse factor 7, two cells separate the reusing cells.

Transmitting

To place a call from a mobile station, the caller enters a code of 7 or 10 digits (a phone number) and presses the send button. The mobile station then scans the band, seeking a

Copyrighted material

setup channel with a strong signal, and sends the data (phone number) to the closest base station using that channel. The base station relays the data to the MSC. The MSC sends the data on to the telephone central office. If the called party is available, a connection is made and the result is relayed back to the MSC. At this point, the MSC assigns an unused voice channel to the call, and a connection is established. The mobile station automatically adjusts its tuning to the new channel, and communication can begin.

Receiving

When a mobile phone is called, the telephone central office sends the number to the MSC. The MSC searches for the location of the mobile station by sending query signals to each cell in a process called *paging*. Once the mobile station is found, the MSC transmits a ringing signal and, when the mobile station answers, assigns a voice channel to the call, allowing voice communication to begin.

Handoff

It may happen that, during a conversation, the mobile station moves from one cell to another. When it does, the signal may become weak. To solve this problem, the MSC monitors the level of the signal every few seconds. If the strength of the signal diminishes, the MSC seeks a new cell that can better accommodate the communication. The MSC then changes the channel carrying the call (hands the signal off from the old channel to a new one).

Hard Handoff Early systems used a hard **handoff.** In a hard handoff, a mobile station only communicates with one base station. When the MS moves from one cell to another, communication must first be broken with the previous base station before communication can be established with the new one. This may create a rough transition.

Soft Handoff New systems use a soft handoff. In this case, a mobile station can communicate with two base stations at the same time. This means that, during handoff, a station may continue with the new base station before breaking from the old one.

Roaming

One feature of cellular telephony is called **roaming.** Roaming means, in principle, that a user can have access to communication or can be reached where there is coverage. A service provider usually has limited coverage. Neighboring service providers can provide extended coverage through a roaming contract. The situation is similar to snail mail between countries. The charge for delivery of a letter between two countries can be divided upon agreement by the two countries.

First Generation

Cellular telephony is now in its second generation with the third on the horizon. The first generation was designed for voice communication using analog signals. We discuss one first-generation mobile system used in North America, AMPS.

Copyrighted material

AMPS

Advanced Mobile Phone System (AMPS) is one of the leading analog cellular systems in North America. It uses FDMA to separate channels in a link.

AMPS is an analog cellular phone system using FDMA.

Bands AMPS operates in the ISM 800-MHz band. The system uses two separate analog channels for forward (base station to mobile station) and reverse (mobile station to base station) communication. The band between 824 and 849 MHz carries reverse communication; the band between 869 and 894 MHz carries forward communication. See Figure 17.3.

Figure 17.3 *Cellular bands for AMPS*

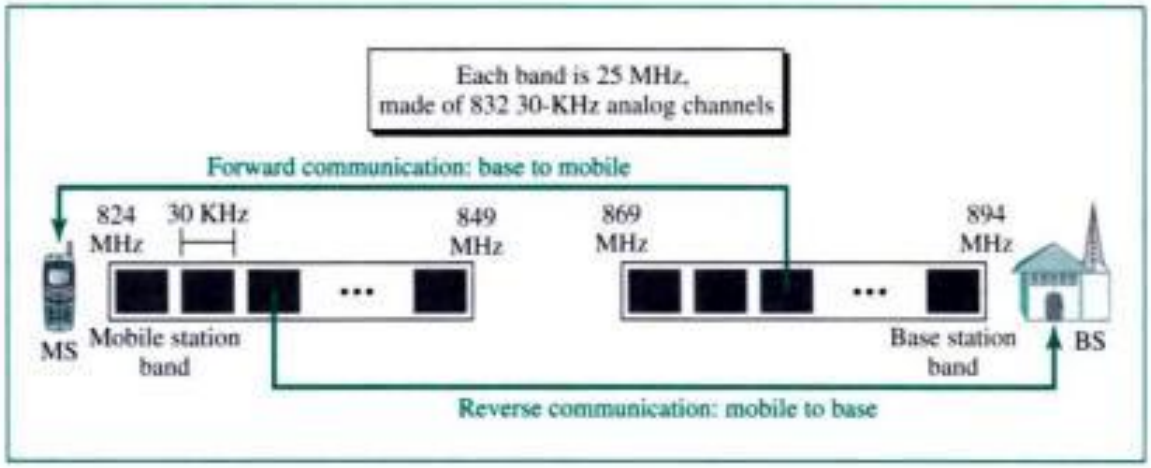

Each band is divided into 832 channels. However, two providers can share an area, which means 416 channels in each cell for each provider. Out of these 416, 21 channels are used for control, which leaves 395 channels. AMPS has a frequency reuse factor of 7; this means only one-seventh of these 395 traffic channels are actually available in a cell.

Transmission AMPS uses FM and FSK for modulation. Figure 17.4 shows the transmission in the reverse direction. Voice channels are modulated using FM, and control channels use FSK to create 30-KHz analog signals. AMPS uses FDMA to divide each 25-MHz band into 30-KHz channels.

Second Generation

To provide higher-quality (less noise-prone) mobile voice communications, the second generation of the cellular phone network was developed. While the first generation was designed for analog voice communication, the second generation was mainly designed for digitized voice. Three major systems evolved in the second generation, as shown in Figure 17.5. We will discuss each system separately.

Copyrighted material

Figure 17.4 *AMPS reverse communication band*

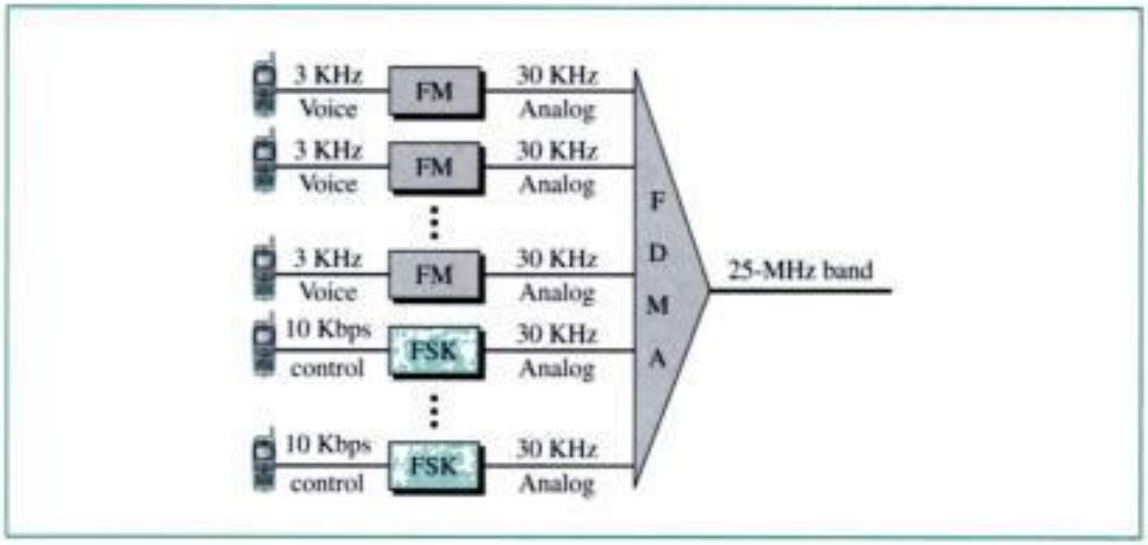

Figure 17.5 *Second-generation cellular phone systems*

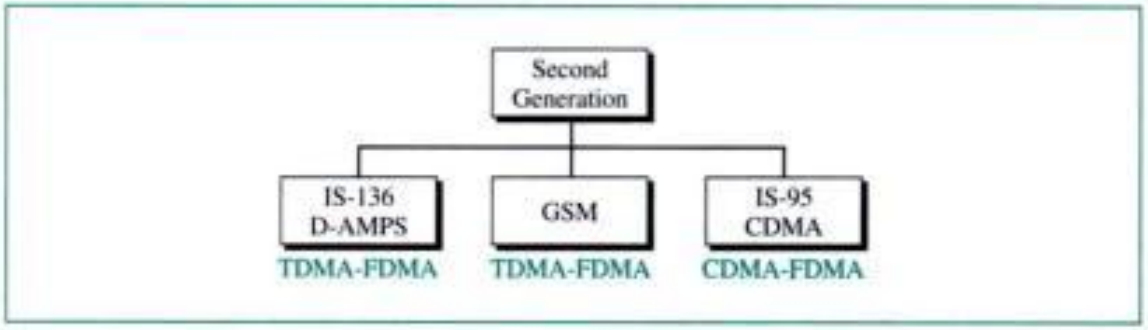

D-AMPS

The product of the evolution of the analog AMPS into a digital system is **digital AMPS (D-AMPS).** D-AMPS was designed to be backward-compatible with AMPS. This means that in a cell, one telephone can use AMPS and another D-AMPS. D-AMPS was first defined by IS-54 (Interim Standard 54) and later revised by IS-136.

Band D-AMPS uses the same bands and channels as AMPS.

Transmission Each voice channel is digitized using a very complex PCM and compression technique. A voice channel is digitized to 7.95 Kbps. Three 7.95-Kbps digital voice channels are combined using TDMA. The result is 48.6 Kbps of digital data; much of this is overhead.

As Figure 17.6 shows, the system sends 25 frames per second, with 1944 bits per frame. Each frame lasts 40 ms (1/25) and is divided into six slots shared by three digital channels; each channel is allotted two slots.

Each slot holds 324 bits. However, only 159 bits comes from the digitized voice; 64 bits for control, and 101 bits for error correction. In other words, each channel drops 159 bits of data in each of the two channels assigned to it. The system adds 64 control bits and 101 error-correcting bits.

Copyrighted material

Figure 17.6 *D-AMPS*

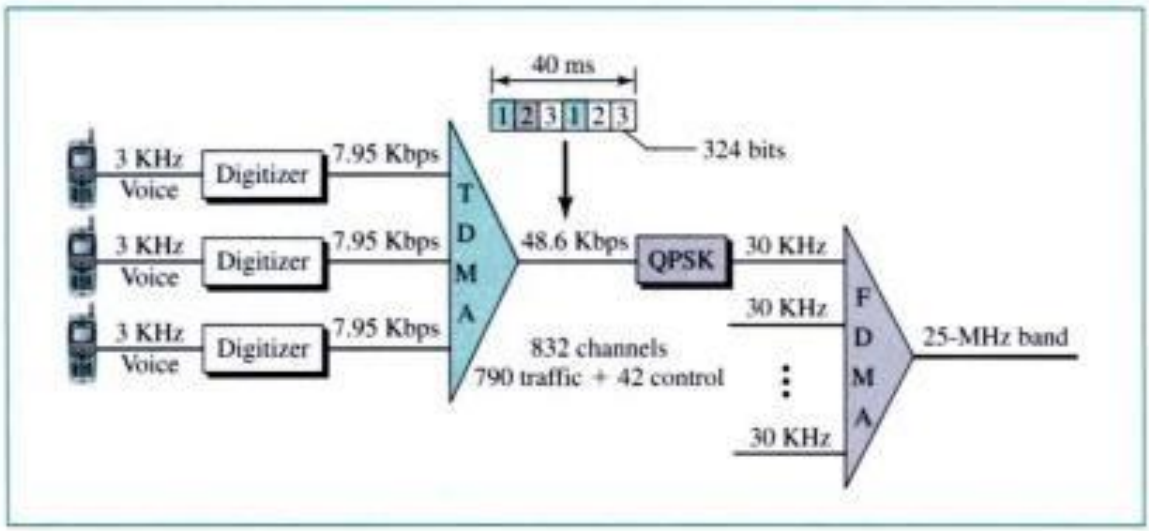

The resulting 48.6 Kbps of digital data modulates a carrier using QPSK; the result is a 30-KHz analog signal. Finally, the 30-KHz analog signals are frequency-multiplexed in the 25-MHz band. D-AMPS has a frequency reuse factor of 7.

D-AMPS, or IS-136, is a digital cellular phone system using TDMA and FDMA.

GSM

The **Global System for Mobile Communication (GSM)** is a European standard that was developed to provide a common second-generation technology for all of Europe. The aim was to replace a number of incompatible first-generation technologies.

Bands GSM uses two bands for duplex communication. Each band is 25 MHz in width, shifted toward 900 MHz, as shown in Figure 17.7. Each band is divided into 124 channels of 200 KHz separated by guard bands.

Transmission Figure 17.8 shows a GSM system. Each voice channel is digitized and compressed to a 13-Kbps digital signal. Each slot carries 156.25 bits. Eight slots are

Figure 17.7 *GSM bands*

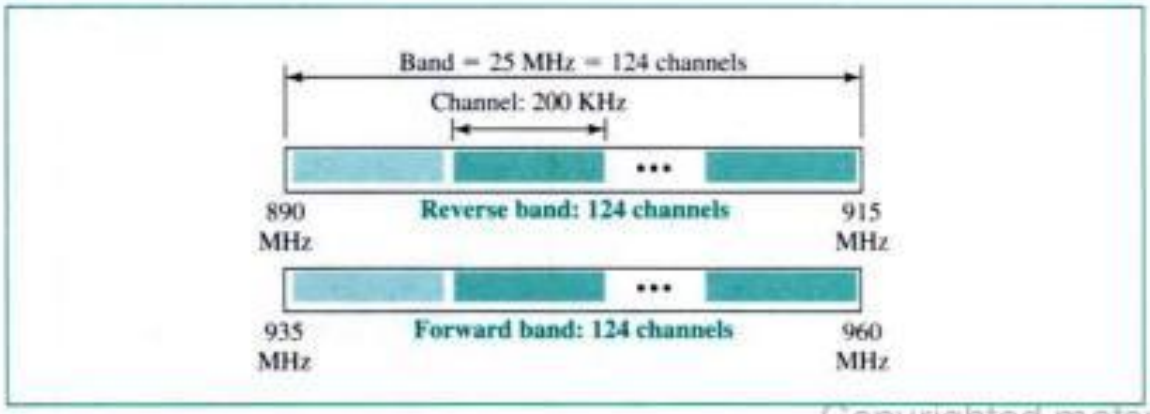

Copyrighted material

Figure 17.8 *GSM*

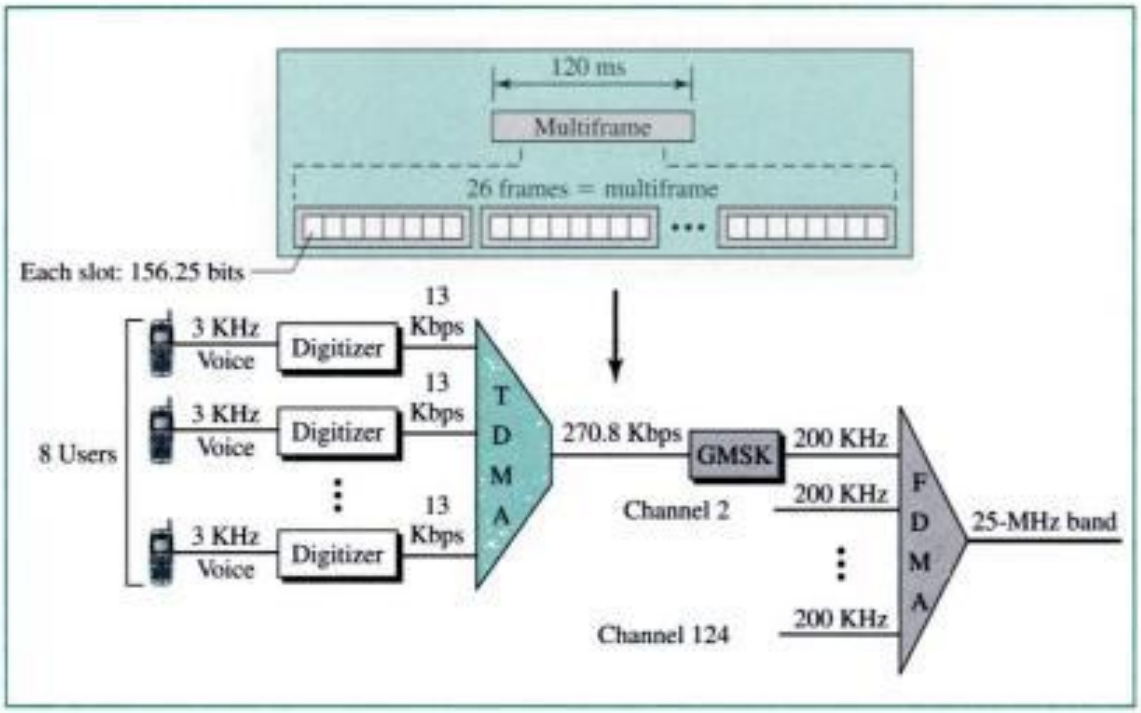

multiplexed together, creating a TDM frame. Twenty-six frames are combined to form a multiframe. We can calculate the bit rate of each channel as follows:

$$\text{Channel data rate} = (1/120 \text{ ms}) \times 26 \times 8 \times 156.25 = 270.8 \text{ Kbps}$$

Each 270.8-Kbps digital channel modulates a carrier using GMSK (a form of FSK used mainly in European systems); the result is a 200-KHz analog signal. Finally 124 analog channels of 200 KHz are multiplexed together using FDMA. The result is a 25-MHz band.

Figure 17.9 shows the user data and overhead in a multiframe.

Figure 17.9 *Multiframe components*

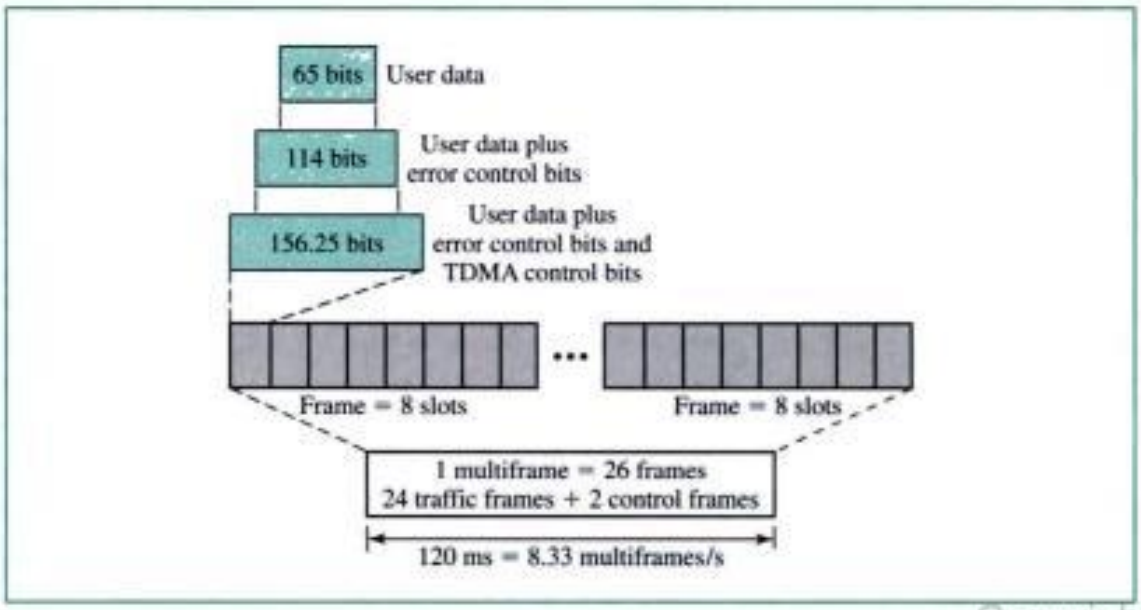

Copyrighted material

The reader may have noticed the large amount of overhead in TDMA. The user data is only 65 bits per slot. The system adds extra bits for error correction to make it 114 bits per slot. To this, control bits are added to bring it up to 156.25 bits per slot. Eight slots are encapsulated in a frame. Twenty-four traffic frames and two additional control frames make a multiframe. A multiframe has a duration of 120 ms. However, the architecture does define superframes and hyperframes that do not add any overhead; we will not discuss them here.

Reuse Factor Because of the complex error correction mechanism, GSM allows a reuse factor as low as 3.

GSM is a digital cellular phone system using TDMA and FDMA.

IS-95

One of the dominating second-generation standards in North America is **Interim Standard 95 (IS-95).** It is based on CDMA and DSSS.

Bands and Channels IS-95 uses two bands for duplex communication. The bands can be the traditional ISM 800-MHz band or the ISM 1900-MHz band. Each band is divided into 20 channels of 1.228 MHz separated by guard bands. Each service provider is allotted 10 channels. IS-95 can be used in parallel with AMPS. Each IS-95 channel is equivalent to 41 AMPS channels (41×30 KHz = 1.23 MHz).

Synchronization All base channels need to be synchronized to use CDMA. To provide synchronization, bases use the services of GPS (Global Positioning System), a satellite system that we discuss in the next section.

Forward Transmission IS-95 has two different transmission techniques: one for use in the forward (base to mobile) direction and another for use in the reverse (mobile to base) direction. In the forward direction, communications between the base and all mobiles are synchronized; the base sends synchronized data to all mobiles. Figure 17.10 shows a simplified diagram for the forward direction.

Each voice channel is digitized, producing data at a basic rate of 9.6 Kbps. After adding error-correcting and repeating bits, and interleaving, the result is a signal of 19.2 ksps (kilosignals per seconds). This output is now scrambled using a 19.2-ksps signal. The scrambling signal is produced from a long code generator that uses the electronic serial number (ESN) of the mobile station and generates 2^{42} pseudorandom chips, each chip having 42 bits. Note that the chips are generated pseudorandomly, not randomly, because the pattern repeats itself. The output of the long code generator is fed to a decimator, which chooses 1 bit out of 64 bits. The output of the decimator is used for scrambling. The scrambling is used to create privacy; the ESN is unique for each station.

The result of the scrambler is fed to the CDMA multiplexer. For each traffic channel, one Walsh 64×64 row chip is selected. The result is a signal of 1.288 Mcps (megachips per second).

$$19.2 \text{ Ksps} \times 64 \text{ cps} = 1.288 \text{ Mcps}$$

Copyrighted material

Figure 17.10 *IS-95 forward transmission*

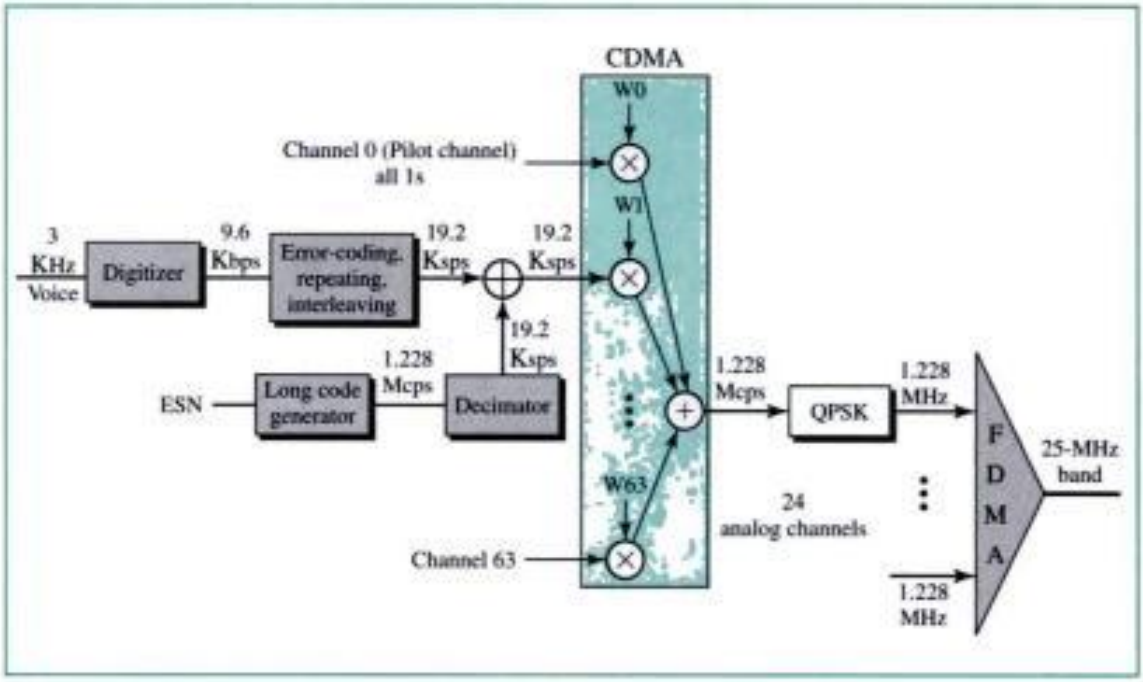

The CDMA-multiplexed signal is fed into a QPSK modulator to produce a signal of 1.288 MHz. The resulting bandwidth is shifted appropriately, using FDMA.

An analog channel creates 64 digital channels, of which 55 channels are traffic channels (carrying digitized voice). Nine channels are used for control and synchronization:

- Channel 0 is a pilot channel. This channel sends a continuous stream of 1s to mobile stations. The stream provides bit synchronization, serves as a phase reference for demodulation, and allows the mobile station to compare the signal strength of neighboring bases for handoff decisions.
- Channel 32 gives information about the system to the mobile station.
- Channels 1 to 7 are used for paging, to send messages to one or more mobile stations.
- Channels 8 to 31 and 33 to 63 are traffic channels carrying digitized voice from the base station to the corresponding mobile station.

Reverse Transmission The use of CDMA in the forward direction is possible because the pilot channel sends a continuous sequence of 1s to synchronize transmission. The synchronization is not used in the reverse direction because we need an entity to do that, which is not feasible. Instead of CDMA, the reverse channels use DSSS (direct sequence spread spectrum), which we discussed in Chapter 15. Figure 17.11 shows a simplified diagram for reverse transmission.

Each voice channel is digitized, producing data at a rate of 9.6 Kbps. However, after adding error-correcting and repeating bits, plus interleaving, the result is a signal of 28.8 Ksps. The output is now passed through a 6/64 symbol modulator. The symbols are divided into six-symbol chunks, and each chunk is interpreted as a binary number (from 0 to 63). The binary number is used as the index to a 64×64 Walsh matrix for

Copyrighted material

Figure 17.11 *IS-95 reverse transmission*

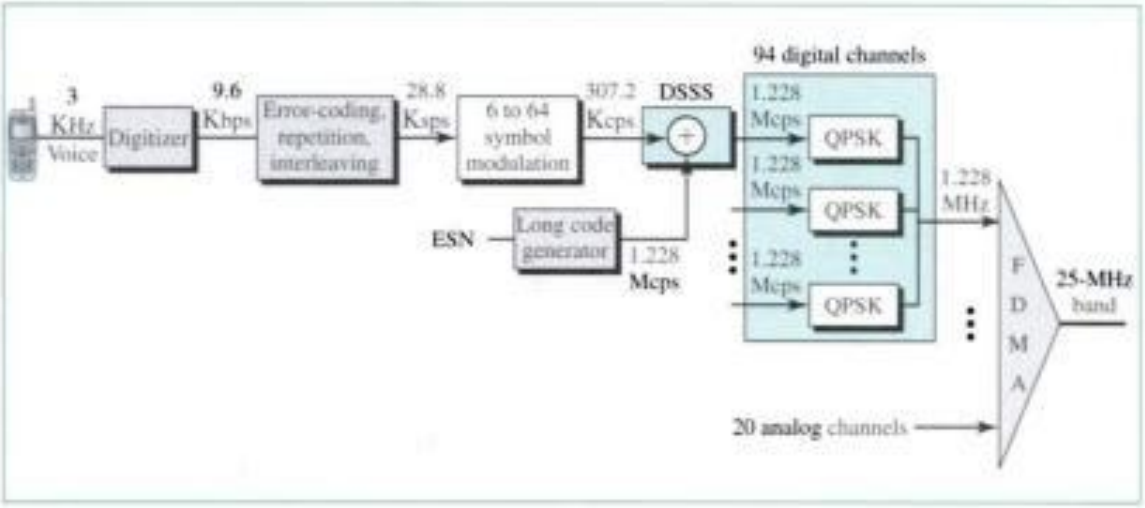

selection of a row of chips. Note that this procedure is not CDMA; each bit is not multiplied by the chips in a row. Each six-symbol chunk is replaced by a 64-chip code. This is done to provide a kind of orthogonality; it differentiates the streams of chips from the different mobile stations. The result creates a signal of 307.2 kcps or $(28.8/6) \times 64$.

Spreading is the next step; each chip is spread into 4. Again the ESN of the mobile station creates a long code of 42 bits at a rate of 1.228 Mcps, which is 4 times 307.2. After spreading, each signal is modulated using QPSK, which is slightly different from the one used in the forward direction; we do not go into details here. Note that there is no multiple-access mechanism here; all reverse channels send their analog signal into the air, but the correct chips will be received by the base station due to spreading.

Although we can create $2^{42} - 1$ digital channels in the reverse direction (because of the long code generator), normally 94 channels are used; 62 are traffic channels, and 32 are channels used to gain access to the base station.

IS-95 is a digital cellular phone system using CDMA/DSSS and FDMA.

Two Data Rate Sets IS-95 defines two data rate sets, with four different rates in each set. The first set defines 9600, 4800, 2400, and 1200 bps. If, for example, the selected rate is 1200 bps, each bit is repeated 8 times to provide a rate of 9600 bps. The second set defines 14,400, 7200, 3600, and 1800 bps. This is possible by reducing the number of bits used for error correction. The bit rates in a set are related to the activity of the channel. If the channel is silent, only 1200 bits can be transferred, which improves the spreading by repeating each bit 8 times.

Frequency Reuse Factor In an IS-95 system, the frequency reuse factor is normally 1 because the interference from neighboring cells cannot affect CDMA or DSSS transmission.

Soft Handoff Every base station continuously broadcasts signals using its pilot channel. This means a mobile station can detect the pilot signal from its cell and neighboring cells. This enables a mobile station to do a soft handoff in contrast to a hard handoff.

Copyrighted material

PCS

Before we leave the discussion on second-generation cellular telephones, let us explain a term generally heard in relation to this generation: PCS. **Personal Communications System (PCS)** does not refer to a single technology such as GSM, IS-136, or IS-95. It is a generic name for a commercial system that offers several kinds of communication services. Common features of these systems can be summarized:

1. They may use any second-generation technology (GSM, IS-136, or IS-95).
2. They use the 1900-MHz band, which means that a mobile station needs more power because higher frequencies have a shorter range than lower ones. However, since a station's power is limited by the FCC, the base station and the mobile station need to be close to each other (smaller cells).
3. They offer communication services such as short message service (SMS) and limited Internet access.

Third Generation

The third generation of cellular telephony refers to a combination of technologies that provide a variety of services. Ideally, when it matures, the third generation can provide both digital data and voice communication. Using a small portable device, a person should be able to talk to anyone else in the world with a voice quality similar to that of the existing fixed telephone network. A person can download and watch a movie, can download and listen to music, can surf the Internet or play games, can have a video conference, and can do much more. One of the interesting characteristics of a third-generation system is that the portable device is always connected; you do not need to dial a number to connect to the Internet.

The third-generation concept started in 1992, when ITU issued a blueprint called **Internet Mobile Communication for year 2000 (IMT-2000).** The blueprint defines some criteria for 3G technology as outlined below:

- Voice quality comparable to that of the existing public telephone network.
- Data rate of 144 Kbps for access in a moving vehicle (car), 384 Kbps for access as the user walks (pedestrians), and 2 Mbps for the stationary user (office or home).
- Support for packet-switched and circuit-switched data services.
- A band of 2 GHz.
- Bandwidths of 2 MHz.
- Interface to the Internet.

The main goal of third-generation cellular telephony is to provide universal personal communication.

IMT-2000 Radio Interface

Figure 17.12 shows the radio interfaces (wireless standards) adopted by IMT-2000. All five are developed from second-generation technologies. The first two evolve from CDMA technology. The third evolves from a combination of CDMA and TDMA. The fourth evolves from TDMA, and the last evolves from both FDMA and TDMA.

Copyrighted material

Figure 17.12 *IMT-2000 radio interfaces*

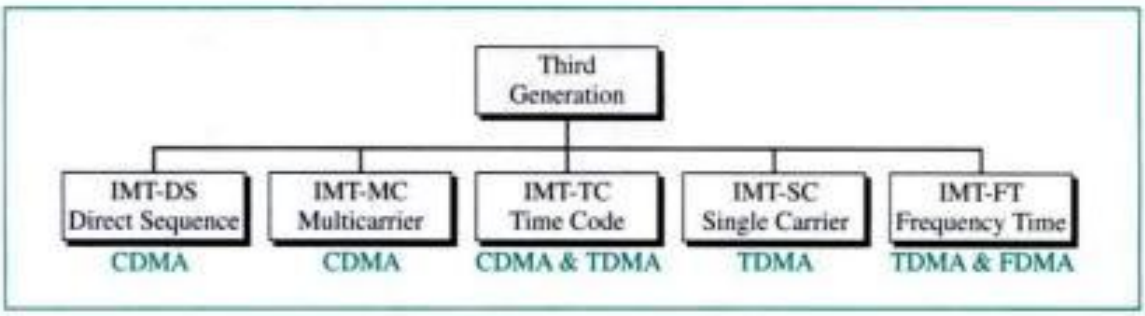

IMT-DS This approach uses a version of CDMA called wideband CDMA or W-CDMA. W-CDMA uses a 5-MHz bandwidth. It was developed in Europe, and it is compatible with the CDMA used in IS-95.

IMT-MC This approach was developed in North America and is known as CDMA 2000. It is an evolution of CDMA technology used in IS-95 channels. It combines the new wideband (15-MHz) spread spectrum with the narrowband (1.25-MHz) CDMA of IS-95. It is backward-compatible with IS-95. It allows communication on multiple 1.25-MHz channels (1, 3, 6, 9, 12 times), up to 15 MHz. The use of the wider channels allows it to reach the 2-Mbps data rate defined for the third generation.

IMT-TC This standard uses a combination of W-CDMA and TDMA. The standard tries to reach the IMT-2000 goals by adding TDMA multiplexing to W-CDMA.

IMT-SC This standard only uses TDMA.

IMT-FT This standard uses a combination of FDMA and TDMA.

17.2 SATELLITE NETWORKS

A **satellite network** is a combination of nodes that provides communication from one point on the earth to another. A node in the network can be a satellite, an earth station, or an end-user terminal or telephone. Although a real satellite, such as the moon, can be used as a relaying node in the network, the use of artificial satellites is preferred because we can install electronic equipment on the satellite to regenerate the signal that has lost its energy during travel. Another restriction on using natural satellites is their distances from the earth, which create a long delay in communication.

Satellite networks are like cellular networks in that they divide the planet into large cells. Satellites can provide transmission capability to and from any location on earth, no matter how remote. This advantage makes high-quality communication available to undeveloped parts of the world without requiring a huge investment in ground-based infrastructure.

Orbits

An artificial satellite needs to have an **orbit,** the path in which it travels around the earth. The orbit can be equatorial, inclined, or polar, as shown in Figure 17.13.

Copyrighted material

Figure 17.13 *Satellite orbits*

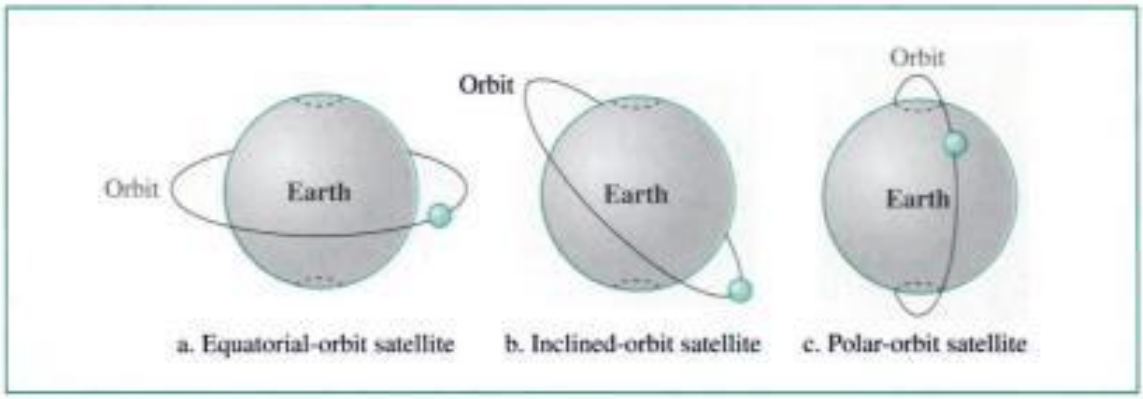

The period of a satellite, the time required for a satellite to make a complete trip around the earth, is determined by Kepler's law, which defines the period as a function of the distance of the satellite from the center of the earth.

$$\text{Period} = C \times \text{distance}^{1.5}$$

Here C is a constant approximately equal to 1/100. The period is in seconds and the distance in kilometers.

Example 1

What is the period of the moon according to Kepler's law?

Solution

The moon is located approximately 384,000 km above the earth. The radius of the earth is 6378 km. Applying the formula, we get

$$\text{Period} = (1/100)\,(384{,}000 + 6378)^{1.5} \longrightarrow 2{,}439{,}090 \text{ s} \longrightarrow 1 \text{ month}$$

Example 2

According to Kepler's law, what is the period of a satellite that is located at an orbit approximately 35,786 km above the earth?

Solution

Applying the formula, we get

$$\text{Period} = (1/100)\,(35{,}786 + 6378)^{1.5} \longrightarrow 86{,}579 \text{ s} \longrightarrow 24 \text{ h}$$

This means that a satellite located at 35,786 km has a period of 24 h, which is the same as the rotation period of the earth. A satellite like this is said to be *stationary* to the earth. The orbit, as we will see, is called a geosynchronous orbit.

Footprint

Satellites process microwaves with bidirectional antennas (line-of-sight). Therefore, the signal from a satellite is normally aimed at a specific area called the **footprint.** The

Copyrighted material

signal power at the center of the footprint is maximum. The power decreases as we move from the footprint center. The boundary of the footprint is the location where the power reaches a predefined threshold.

Three Categories of Satellites

Based on the location of the orbit, satellites can be divided into three categories: GEO, LEO, and MEO. Figure 17.14 shows the taxonomy.

Figure 17.14 *Satellite categories*

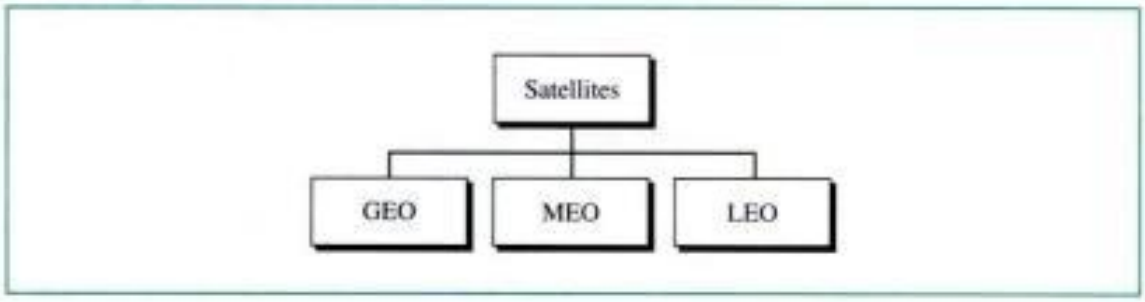

Figure 17.15 shows the satellite altitudes with respect to the surface of the earth. There is only one orbit, at an altitude of 35,786 km for the GEO satellite. MEO satellites are located at altitudes between 5000 and 15,000 km. LEO satellites are normally below an altitude of 2000 km.

Figure 17.15 *Satellite orbit altitudes*

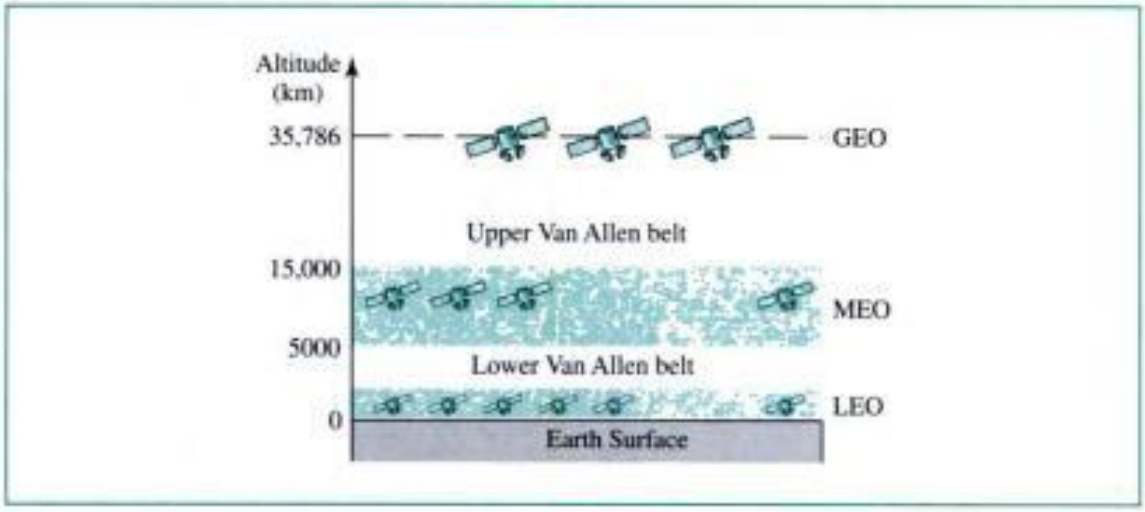

One reason for having different orbits is due to the existence of two Van Allen belts. A Van Allen belt is a layer that contains charged particles. A satellite orbiting in one of these two belts would be totally destroyed by the energetic charged particles. The MEO orbits are located between these two belts.

Copyrighted material

Frequency Bands for Satellite Communication

The frequencies reserved for satellite microwave communication are in the gigahertz (GHz) range. Each satellite sends and receives over two different bands. Transmission from the earth to the satellite is called **uplink.** Transmission from the satellite to the earth is called **downlink.** Table 17.1 gives the band names and frequencies for each range.

Table 17.1 *Satellite frequency bands*

Band	*Downlink, GHz*	*Uplink, GHz*	*Bandwidth, MHz*
L	1.5	1.6	15
S	1.9	2.2	70
C	4	6	500
Ku	11	14	500
Ka	20	30	3500

GEO Satellites

Line-of-sight propagation requires that the sending and receiving antennas be locked onto each other's location at all times (one antenna must have the other in sight). For this reason, a satellite that moves faster or slower than the earth's rotation is useful only for short periods of time. To ensure constant communication, the satellite must move at the same speed as the earth so that it seems to remain fixed above a certain spot. Such satellites are called *geosynchronous.*

Because orbital speed is based on distance from the planet, only one orbit can be geosynchronous. This orbit occurs at the equatorial plane and is approximately 22,000 miles from the surface of the earth.

But one geosynchronous satellite cannot cover the whole earth. One satellite in orbit has line-of-sight contact with a vast number of stations, but the curvature of the earth still keeps much of the planet out of sight. It takes a minimum of three satellites equidistant from each other in **geosynchronous Earth orbit (GEO)** to provide full global transmission. Figure 17.16 shows three satellites, each 120° from another in geosynchronous orbit around the equator. The view is from the North Pole.

Figure 17.16 *Satellites in geosynchronous orbit*

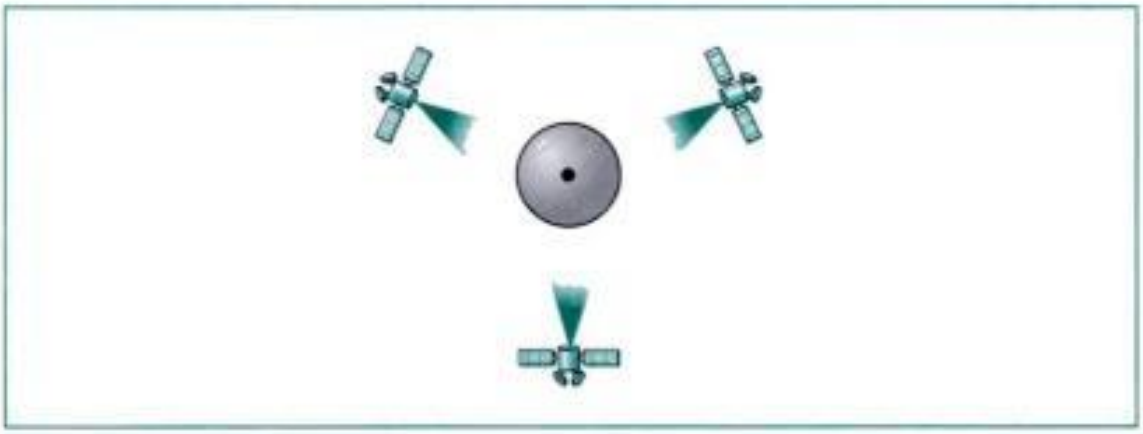

Copyrighted material

MEO Satellites

Medium-Earth orbit (MEO) satellites are positioned between the two Van Allen belts. A satellite at this orbit takes approximately 6 hours to circle the earth.

GPS

One example of a MEO satellite system is the **Global Positioning System (GPS)** orbiting at an altitude about 18,000 km (11,000 miles) above the Earth. Although GPS was put in place by the Department of Defense, it is now a public system. The system consists of 24 satellites and is used for land and sea navigation to provide time and locations for vehicles and ships. The GPS is not used for communications.

GPS is based on a principle called **triangulation.** On a plane, if we know our distance from three points, we know exactly where we are. Let us say that we are 10 miles away from point A, 12 miles away from point B, and 15 miles away from point C. If we draw three circles with the centers at A, B, and C, we must be somewhere on circle A, somewhere on circle B, and somewhere on circle C. These three circles meet at one single point (if our distances are correct), our position. Figure 17.17 shows the concept. In space, however, the situation is different. Three spheres meet in two points; we need four spheres. If we know our distance from four points, we can find out where we are.

Figure 17.17 *Triangulation*

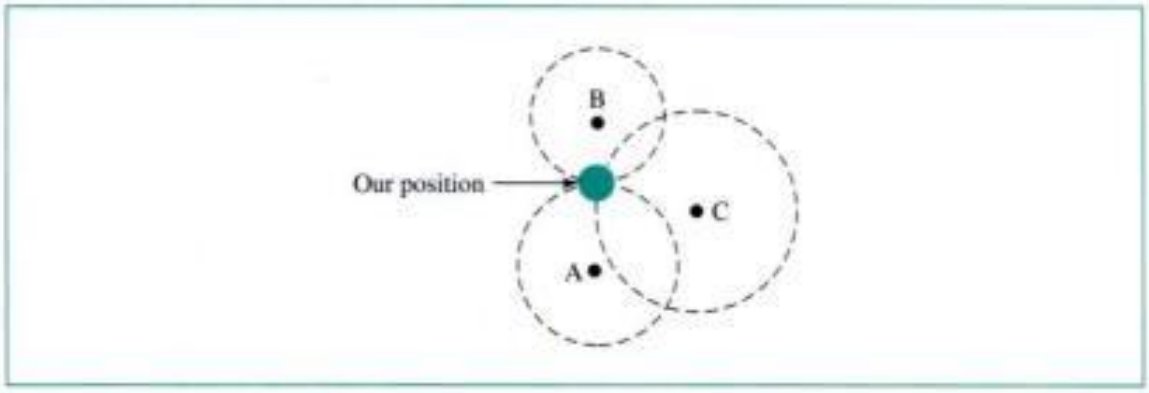

GPS uses 24 satellites in six orbits, as shown in Figure 17.18. The orbits and the locations of the satellites in each orbit are designed in such a way that, at any time, four satellites are visible from any point on Earth. A GPS receiver has an almanac that tells the current position of a satellite. It then sends a signal to four satellites and measures how long it takes for the signal to return. It calculates your position on the Earth. A GPS receiver can also show you where you are on a map.

GPS is used by military forces. For example, thousands of portable GPS receivers were used during the Persian Gulf war by foot soldiers, vehicles, and helicopters. Another use of GPS is in navigation. The driver of a car can find the location of the car. The driver can then consult a database in the memory of the automobile to be directed to the destination. In other words, GPS gives the location of the car, and the database uses this information to find a path to the destination. As we mentioned previously, the IS-95 cellular telephone system uses GPS to create synchronization between the base stations.

Copyrighted material

Figure 17.18 *GPS*

LEO Satellites

Low-Earth orbit (LEO) satellites have polar orbits. The altitude is between 500 to 2000 km, with a rotation period of 90 to 120 min. The satellite has a speed of 20,000 to 25,000 km/h. An LEO system usually has a cellular type of access, similar to the cellular telephone system. The footprint normally has a diameter of 8000 km. Because LEO satellites are close to the Earth, the round-trip time propagation delay is normally less than 20 ms, which is acceptable for audio communication.

A LEO system is made of a constellation of satellites that work together as a network; each satellite acts as a switch. Satellites that are close to each other are connected through intersatellite links (ISLs). A mobile system communicates with the satellite through a user mobile link (UML). A satellite can also communicate with an earth station (gateway) through a gateway link (GWL). Figure 17.19 shows a typical LEO satellite network.

LEO satellites can be divided into three categories: little LEOs, big LEOs, and broadband LEOs. The little LEOs operate under 1 GHz. They are mostly used for low-data-rate messaging. The big LEOs operate between 1 and 3 GHz. Globalstar and Iridium systems are examples of big LEOs. The broadband LEOs provide communication similar to fiber-optic networks. The first broadband LEO system was Teledesic.

Figure 17.19 *LEO satellite system*

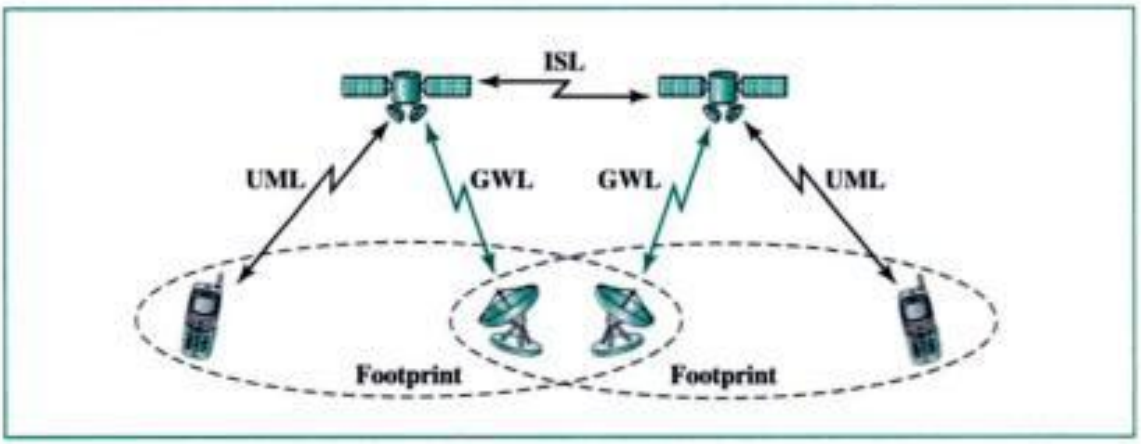

Copyrighted material

Iridium System

The concept of the **Iridium** system, a 77-satellite network, was started by Motorola in 1990. The project took 8 years to materialize. During this period, the number of satellites was reduced. Finally, in 1998, the service started with 66 satellites. The original name, Iridium, came from the name of the 77th chemical element; a more appropriate name is Dysprosium (the name of element 66).

Iridium has gone through rough times. The system was halted in 1999 due to financial problems; it was sold and restarted in 2001 under new ownership.

The system has 66 satellites divided into six orbits, with 11 satellites in each orbit. The orbits are at an altitude of 750 km. The satellites in each orbit are separated from one another by approximately 32° of latitude. Figure 17.20 shows a schematic diagram of the constellation.

Figure 17.20 *Iridium constellation*

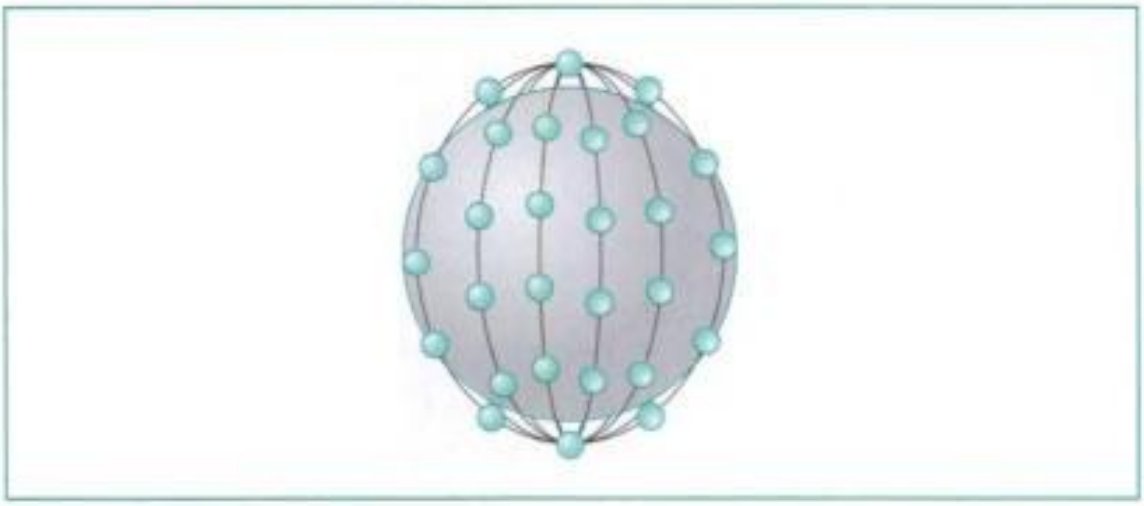

The Iridium system has 66 satellites in six LEO orbits, each at an altitude of 750 km.

Since each satellite has 48 spot beams, the system can have up to 3168 beams. However, some of the beams are turned off as the satellite approaches the pole. The number of active spot beams at any moment is approximately 2000. Each spot beam covers a cell on the earth, which means that the earth is divided into approximately 2000 (overlapping) cells.

In the Iridium system, communication between two users takes place through satellites. When a user calls another user, the call can go through several satellites before reaching the destination. This means that relaying is done in space and each satellite needs to be sophisticated enough to do relaying. This strategy eliminates the need for many terrestrial stations.

The whole purpose of Iridium is to provide direct worldwide communication using handheld terminals (same concept as cellular telephony). The system can be used for voice, data, paging, fax, and even navigation. The system can provide connectivity between users at locations where other types of communication are not possible. The system provides 2.4- to 4.8-Kbps voice and data transmission between portable telephones.

Copyrighted material

Transmission occurs in the 1.616- to 1.6126-GHz frequency band. Intersatellite communication occurs in the 23.18- to 23.38-GHz frequency band.

Iridium is designed to provide direct worldwide voice and data communication using handheld terminals, a service similar to cellular telephony but on a global scale.

Globalstar

Globalstar is another LEO satellite system. The system uses 48 satellites in six polar orbits with each orbit hosting eight satellites. The orbits are located at an altitude of almost 1400 km.

The Globalstar system is similar to the Iridium system; the main difference is the relaying mechanism. Communication between two distant users in the Iridium system requires relaying between several satellites; Globalstar communication requires both satellites and earth stations, which means that ground stations can create more powerful signals.

Teledesic

Teledesic is a system of satellites that provides fiber-optic-like (broadband channels, low error rate, and low delay) communication. Its main purpose is to provide broadband Internet access for users all over the world. It is sometimes called "Internet in the sky."

The project was started in 1990 by Craig McCaw and Bill Gates; later, other investors joined the consortium. The project is scheduled to be fully functional in 2005.

Constellation Teledesic provides 288 satellites in 12 polar orbits with each orbit hosting 24 satellites. The orbits are at an altitude of 1350 km, as shown in Figure 17.21.

Figure 17.21 *Teledesic*

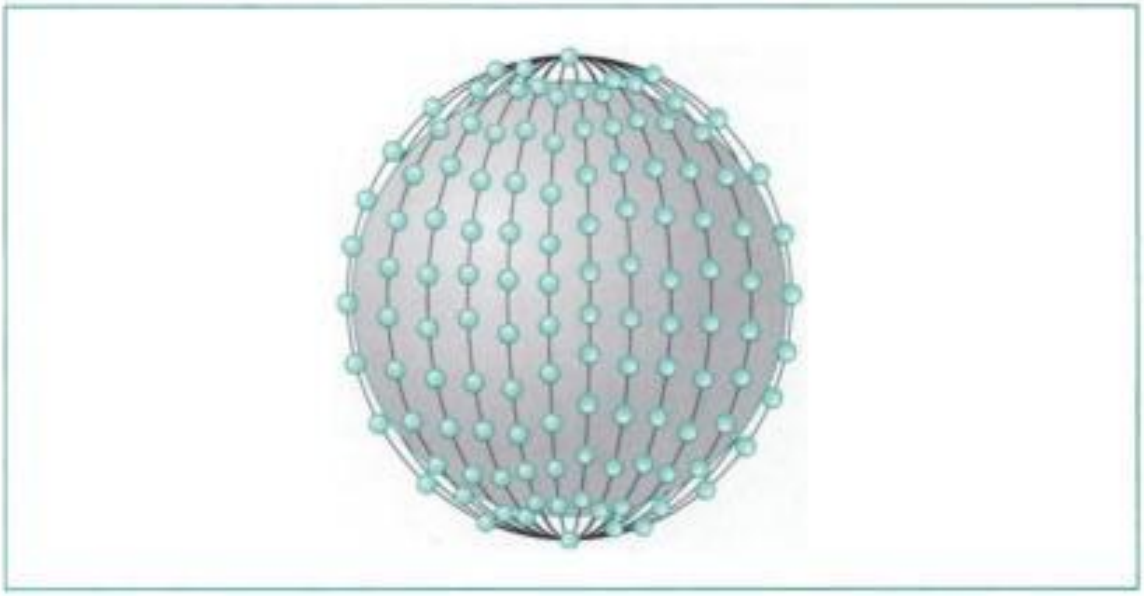

Teledesic has 288 satellites in 12 LEO orbits, each at an altitude of 1350 km.

Copyrighted material

Communication The system provides three types of communication. Intersatellite communication allows eight neighboring satellites to communicate with one another. Communication is also possible between a satellite and an earth gateway station. Users can communicate directly with the network using terminals. The earth is divided into tens of thousands of cells. Each cell is assigned a time slot, and the satellite focuses its beam to the cell at the corresponding time slot. The terminal can send data during its time slot. A terminal receives all packets intended for the cell, but selects only those intended for its address.

Bands Transmission occurs in the Ka bands.

Data Rate The data rate is up to 155 Mbps for the uplink and up to 1.2 Gbps for the downlink.

17.3 KEY TERMS

Advanced Mobile Phone System (AMPS)
cellular telephony
digital AMPS (D-AMPS)
downlink
footprint
geosynchronous Earth orbit (GEO)
Global Positioning System (GPS)
Global System for Mobile Communication (GSM)
Globalstar
handoff
Interim Standard 95 (IS-95)
Internet Mobile Communication for year 2000 (IMT-2000)
Iridium
low-Earth orbit (LEO)
medium-Earth orbit (MEO)
mobile switching center (MSC)
orbit
personal communications system (PCS)
reuse factor
roaming
satellite network
Teledesic
triangulation
uplink

17.4 SUMMARY

- Cellular telephony provides communication between two devices. One or both may be mobile.
- A cellular service area is divided into cells.
- Advanced Mobile Phone System (AMPS) is a first-generation cellular phone system.
- Digital AMPS (D-AMPS) is a second-generation cellular phone system that is a digital version of AMPS.
- Global System for Mobile Communication (GSM) is a second-generation cellular phone system used in Europe.
- Interim Standard 95 (IS-95) is a second-generation cellular phone system based on CDMA and DSSS.

Copyrighted material

- The third-generation cellular phone system will provide universal personal communication.
- A satellite network uses satellites to provide communication between any points on earth.
- A geosynchronous Earth orbit (GEO) is at the equatorial plane and revolves in phase with the earth.
- Global Positioning System (GPS) satellites are medium-Earth-orbit (MEO) satellites that provide time and location information for vehicles and ships.
- Iridium satellites are low-Earth-orbit (LEO) satellites that provide direct universal voice and data communications for handheld terminals.
- Teledesic satellites are low-Earth-orbit satellites that will provide universal broadband Internet access.

17.5 PRACTICE SET

Review Questions

1. What is the relationship between a base station and a mobile switching center?
2. What are the functions of a mobile switching center?
3. Which is better, a low reuse factor or a high reuse factor? Explain your answer.
4. What is the difference between a hard handoff and a soft handoff?
5. What is AMPS?
6. What is the relationship between D-AMPS and AMPS?
7. What is GSM?
8. What is the function of the CDMA multiplexer in IS-95?
9. What are the three types of orbits?
10. Which type of orbit does a GEO satellite have? Explain your answer.
11. What is a footprint?
12. What is the relationship between the Van Allen belts and satellites?
13. Compare an uplink with a downlink.
14. What is the purpose of GPS?
15. What is the main difference between Iridium and Globalstar?

Multiple-Choice Questions

16. A _____ is a computerized center that is responsible for connecting calls, recording call information, and billing.
    a. Base station
    b. Mobile switching center
    c. Cell
    d. Mobile station

Copyrighted material

17. In _____, a mobile station always communicates with just one base station.
    a. Roaming
    b. A hard handoff
    c. A soft handoff
    d. A roaming handoff
18. _____ is a first-generation cellular phone system.
    a. AMPS
    b. D-AMPS
    c. GSM
    d. IS-95
19. _____ is a second-generation cellular phone system.
    a. D-AMPS
    b. GSM
    c. IS-95
    d. All the above
20. AMPS uses _____ for modulation.
    a. FM
    b. FSK
    c. PM
    d. (a) and (b)
21. _____ separates the AMPS voice channels.
    a. CDMA
    b. TDMA
    c. FDMA
    d. (b) and (c)
22. _____ is a cellular telephone system popular in Europe.
    a. AMPS
    b. D-AMPS
    c. GSM
    d. IS-95
23. D-AMPS uses _____ for multiplexing.
    a. CDMA
    b. TDMA
    c. FDMA
    d. (b) and (c)
24. GSM uses _____ for multiplexing.
    a. CDMA
    b. TDMA
    c. FDMA
    d. (b) and (c)

Copyrighted material

25. DSSS is used by the _____ cellular phone system.
    a. AMPS
    b. D-AMPS
    c. GSM
    d. IS-95
26. _____ base stations use GPS for synchronization.
    a. AMPS
    b. D-AMPS
    c. GSM
    d. IS-95
27. IS-95 has a frequency reuse factor of _____.
    a. 1
    b. 5
    c. 7
    d. 95
28. The path that a satellite makes around the world is called _____.
    a. A period
    b. A footprint
    c. An orbit
    d. An uplink
29. A GEO satellite has _____ orbit.
    a. An equatorial
    b. A polar
    c. An inclined
    d. An equilateral
30. The signal from a satellite is aimed at a specific area called the _____.
    a. Period
    b. Footprint
    c. Orbit
    d. Uplink
31. Which orbit has the highest altitude?
    a. GEO
    b. MEO
    c. LEO
    d. HEO
32. MEO satellites orbit _____ Van Allen belts.
    a. In the
    b. Between the
    c. Above both
    d. Below both

Copyrighted material

33. Transmission from the Earth to the satellite is called the _____.
    a. Footlink
    b. Up print
    c. Downlink
    d. Uplink
34. The _____ is not used for voice communication.
    a. IS-95 system
    b. Globalstar system
    c. GPS
    d. Iridium system
35. _____ is often used for navigation purposes.
    a. AMPS
    b. IS-95
    c. Iridium
    d. GPS
36. An LEO satellite has _____ orbit.
    a. An equatorial
    b. An inclined
    c. A polar
    d. All the above
37. Teledesic is a _____ LEO satellite system.
    a. Little
    b. Big
    c. Passband
    d. Broadband
38. _____ has 66 satellites in six LEOs.
    a. Globalstar
    b. Iridium
    c. Teledesic
    d. GPS
39. _____ has 48 satellites in six polar orbits.
    a. Globalstar
    b. Iridium
    c. Teledesic
    d. GPS
40. _____ will have 288 satellites in 12 polar orbits.
    a. Globalstar
    b. Iridium
    c. Teledesic
    d. GPS

Copyrighted material

Exercises

41. Draw a cell pattern with a frequency reuse factor of 3.
42. What is the maximum number of callers in each cell in AMPS?
43. What is the maximum number of callers in each cell in an IS-136 (D-AMPS) system?
44. What is the maximum number of callers in each cell in a GSM?
45. What is the maximum number of callers in each cell in an IS-95 system?
46. What is the efficiency of AMPS in terms of callers per megahertz of bandwidth?
47. What is the efficiency of D-AMPS in terms of callers per megahertz of bandwidth?
48. What is the efficiency of GSM in terms of callers per megahertz of bandwidth?
49. What is the efficiency of IS-95 in terms of callers per megahertz of bandwidth?
50. Guess the relationship between a 3-KHz voice channel and a 30-KHz modulated channel in a stem using AMPS.
51. How many slots are sent in each second in a system using D-AMPS? How many slots are sent by each user in 1 s?
52. Can you find out why the basic user data rate is only 13 Kbps for GSM?
53. In IS-95, how many digital channels are available in each cell?
54. What happens if a satellite is placed above the GEO?
55. Use Kepler's formula to check the accuracy of a given period and altitude for a GPS satellite.
56. Use Kepler's formula to check the accuracy of a given period and altitude for an Iridium satellite.
57. Use Kepler's formula to check the accuracy of a given period and altitude for a Globalstar satellite.

Copyrighted material

Copyrighted material

CHAPTER 18

Virtual Circuit Switching: Frame Relay and ATM

This is our last chapter on the data link layer. Previously, we introduced flow and error control and data link layer protocols such as HDLC. We explained multiple-access mechanism in wired LANs and wireless LANs. We need to discuss one last issue: switching in WANs.

First we introduce the concept of **virtual circuit switching,** the technique used in a switched WAN. We show how it is different from circuit switching at the physical layer.

Two common WAN technologies use virtual circuit switching. Frame Relay is a relatively high-speed protocol that can provide some services not available in other WAN technologies such as DSL, cable TV, and T lines.

ATM, as a high-speed protocol, can be the superhighway of communication when it deploys physical layer carriers such as SONET.

18.1 VIRTUAL CIRCUIT SWITCHING

In Chapter 8, we discussed circuit switching. Circuit switching is mostly used at the physical layer to create *real* circuits, dedicated lines, between a source and destination. Real circuits were designed for real-time audio (telephony). For data communication, packet switching networks were designed; data are packetized and sent packet by packet. The main difference between a circuit-switched and a packet-switched network is that in the latter the links are shared, channelized between different communication paths. A link between switch 1 and 2 may carry several packets at the same time, each sent by a different source and going to different destinations.

Packet switching uses two different approaches: the datagram approach and the virtual circuit approach. The datagram approach is mostly used in the network layer; therefore, we postpone its discussion until later chapters. The virtual circuit approach is a data link layer technology; we discuss this approach in this chapter.

Figure 18.1 is an example of a virtual circuit wide area network. The network has switches that allow traffic from sources to destinations. A source or destination can be a computer, router, bridge, or any other device that connects other networks (LANs, for example) to the switched WAN.

Copyrighted material

Figure 18.1 *Virtual circuit wide area network*

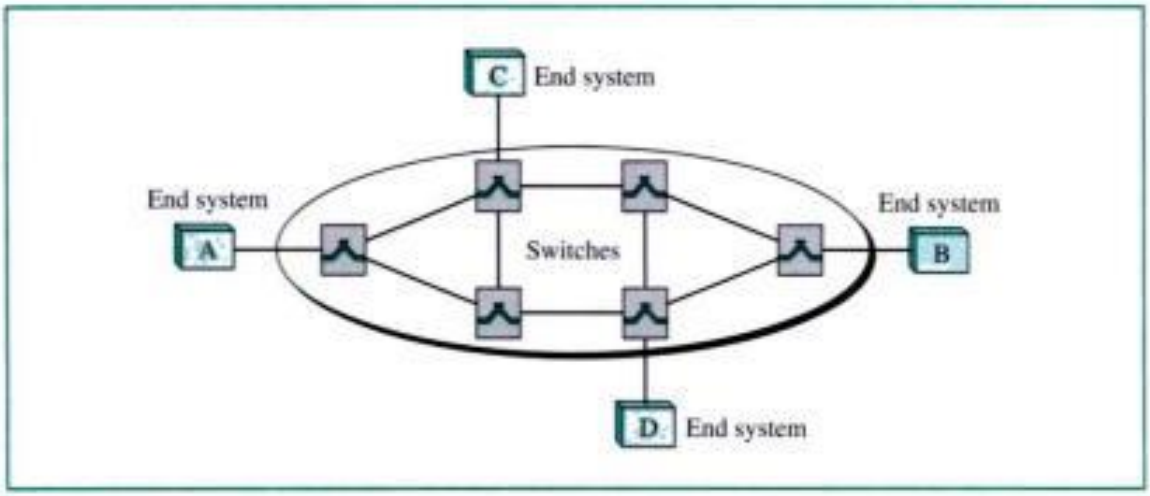

Global Addressing

A source or a destination needs to have a global address, an address that can be unique in the scope of the WAN or internationally if the WAN is used as part of an international network. However, we will see that global addressing in virtual circuit networks is used only to create a virtual circuit identifier, as discussed next.

Virtual Circuit Identifier

The identifier that is actually used for data transfer is called the **virtual circuit identifier (VCI).** A VCI, unlike a global address, is a small number that only has switch scope; it is used by a frame between two switches. When a frame arrives at a switch, it has one VCI; when it leaves, it has another. Figure 18.2 shows how the VCI in a data frame changes from one switch to another.

Figure 18.2 *VCI*

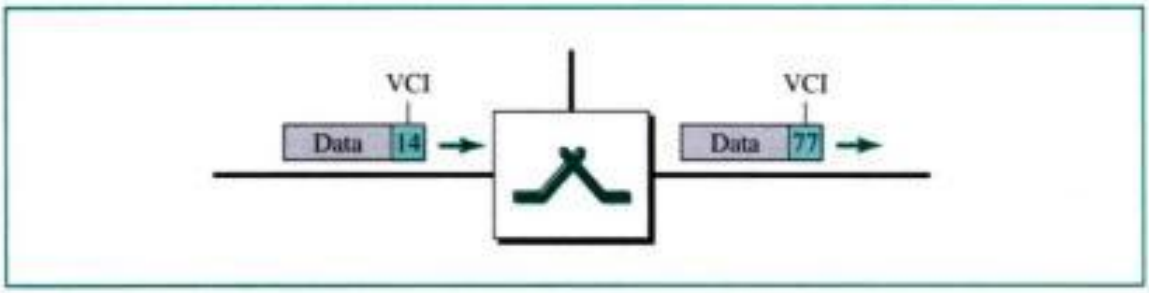

Note that a VCI does not need to be a large number since each switch can use its own unique set of VCIs.

Three Phases

To communicate, a source and destination need to go through three phases: **setup, data transfer,** and **teardown,** as shown in Figure 18.3.

Copyrighted material

Figure 18.3 *VCI phases*

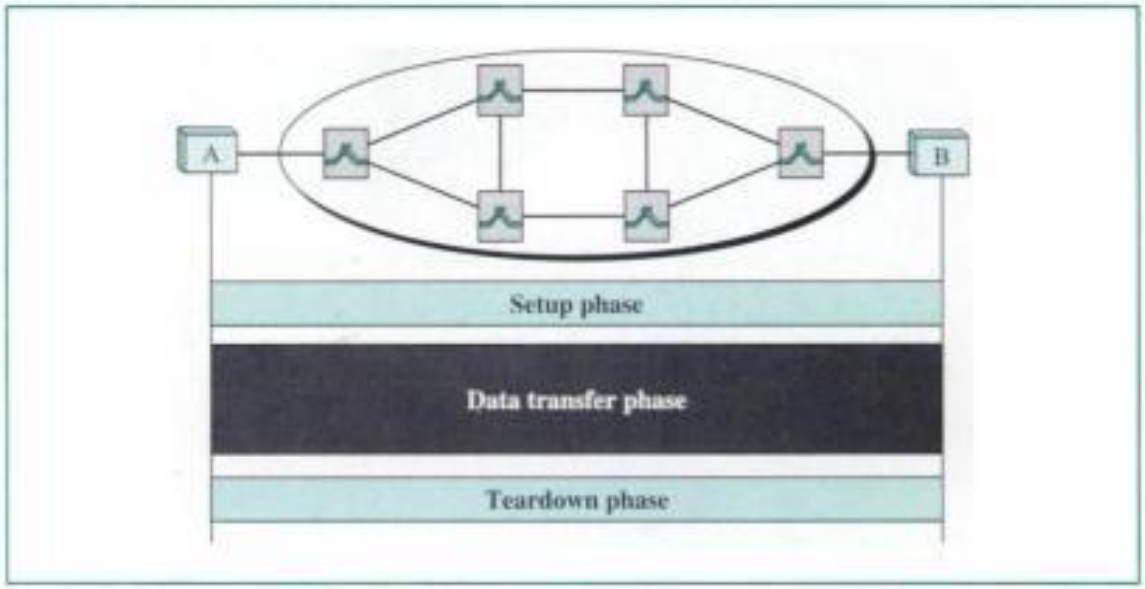

In the setup phase, the source and destination use their global addresses to help switches make table entries for the connection. In the teardown phase, the source and destination inform the switches to erase the corresponding entry. Data transfer occurs between these two phases. We first discuss the data transfer phase, which is more straightforward; we then talk about the setup and teardown phases.

Data Transfer Phase

To transfer a frame from a source to its destination, all switches need to have a table entry for this virtual circuit. The table, in its simplest form, has four columns. This means that the switch holds four pieces of information for each virtual circuit that is already set up. We show later how the switches make their table entries, but for the moment we assume that each switch has a table with entries for all active virtual circuits. Figure 18.4 shows such a switch and its corresponding table.

The figure shows a frame arriving at port 1 with a VCI of 14. When the frame arrives, the switch looks in its table to find port 1, and VCI 14. When it is found, the switch knows to change the VCI to 22 and send out the frame from port 3.

Figure 18.5 shows how a frame from source A reaches destination B and how its VCI changes during the trip. Each switch changes the VCI and routes the frame.

The data transfer phase is active until the source sends all its frames to the destination. The procedure at the switch is the same for each frame of a message. The process creates a virtual circuit, not a real circuit, between the source and destination.

Setup Phase

The setup phase is interesting. How does a switch create an entry for a virtual circuit? There are two approaches here: the **permanent virtual circuit (PVC)** approach and the **switched virtual circuit (SVC)** approach.

Copyrighted material

Figure 18.4 *Switch and table*

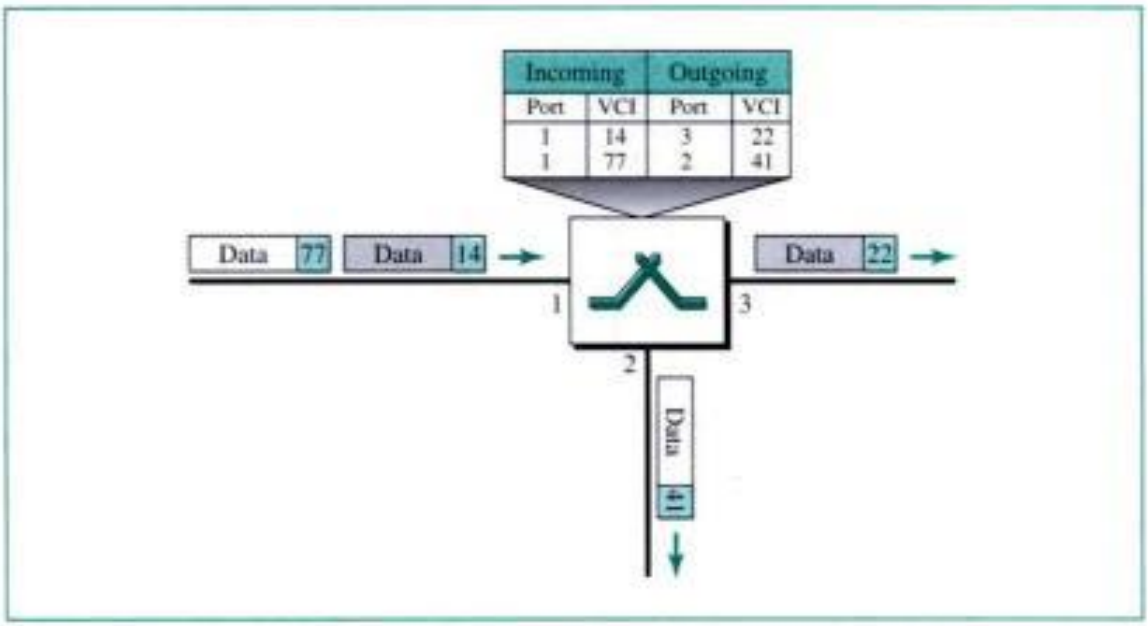

Figure 18.5 *Source-to-destination data transfer*

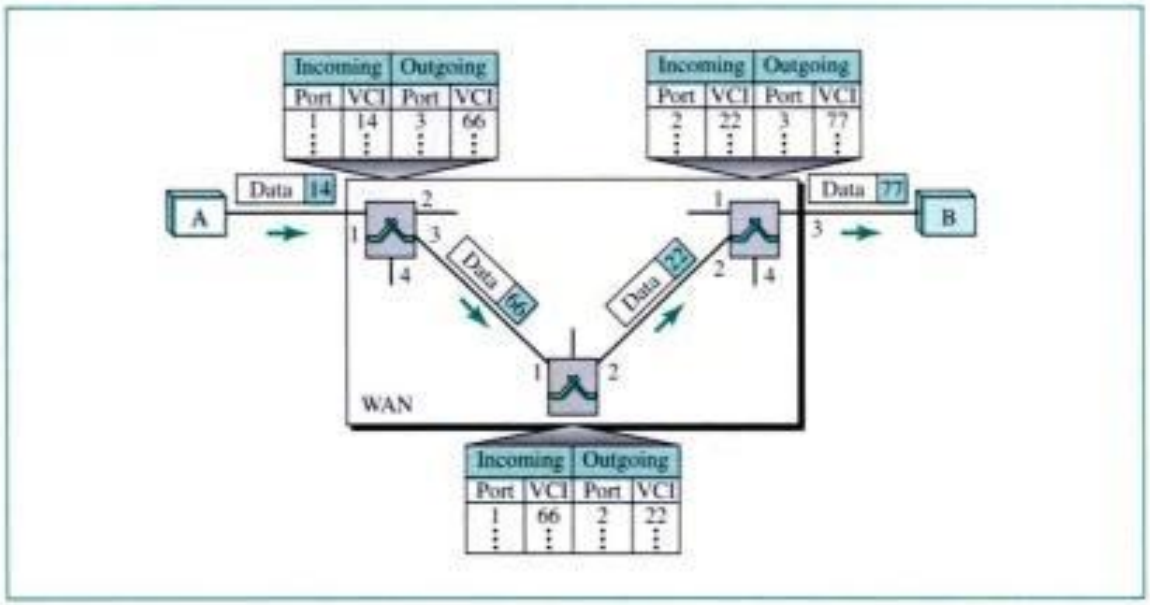

Permanent Virtual Circuit

A source and a destination may choose to have a permanent virtual circuit. In this case, the connection setup is simple. The corresponding table entry is recorded for all switches by the administrator (of course remotely and electronically). An outgoing VCI is given to the source, and an incoming VCI is given to the destination. The source always uses this VCI to send frames to that particular destination; the destination knows that the frame is coming from that particular source if the frame carries the corresponding incoming VCI. If there is a need for duplex communication, two virtual circuits are established. The PVC is like a leased telephone line. If there is a leased

Copyrighted material

telephone line between party A and party B, A can pick up the receiver and talk with B without dialing.

Switched Virtual Circuit

PVC connections have two drawbacks. First, they are costly because two parties pay for the connection all the time even when it is not in use. Second, a connection is created from one source to one single destination. If a source needs connections with several destinations, it needs a PVC for each connection. An alternate approach is the SVC. The SVC creates a temporary, short connection that exists only when data are being transferred between source and destination. An SVC requires a connection phase.

Suppose source A needs to create a virtual circuit to B. Two steps are required, the setup request and the acknowledgment.

Setup Request A setup request frame is sent from the source to the destination. Figure 18.6 shows the process.

Figure 18.6 *SVC setup request*

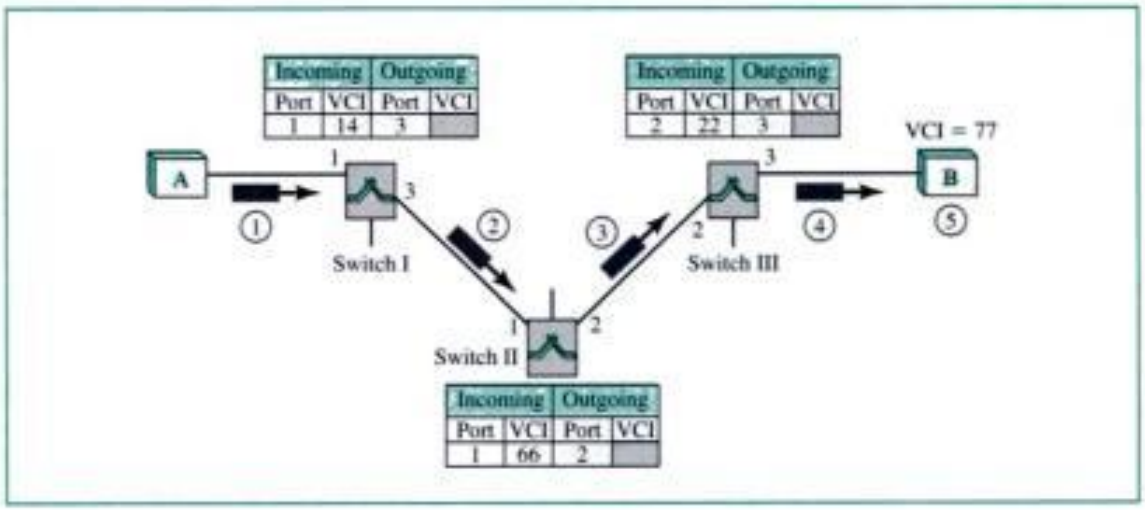

1. Source A sends a setup frame to switch I.
2. Switch I receives the setup request frame. It knows that a frame going from A to B goes out through port 3. How the switch has this information is a point covered in future chapters. The switch, in the setup phase, acts as a router; it has a routing table which is different from the switching table. For the moment, assume that it knows the output port. The switch creates an entry in its table for this virtual circuit, but it is only able to fill three of the four columns. The switch assigns the incoming port (1) and chooses an available incoming VCI (14) and the outgoing port (3). It does not yet know the outgoing VCI, which will be found during the acknowledgment step. The switch then forwards the frame through port 3 to switch II.
3. Switch II receives the setup request frame. The same events happen here as at switch I; three columns of the table are completed: in this case, incoming port (1), incoming VCI (66), and outgoing port (2).

Copyrighted material

4. Switch III receives the setup request frame. Again, three columns are completed: incoming port (2), incoming VCI (22), and outgoing port (3).
5. Destination B receives the setup frame, and if it is ready to receive frames from A, it assigns a VCI to the incoming frames that come from A, in this case 77. This VCI lets the destination know that the frames come from A, and not other sources.

Acknowledgment A special frame, called the acknowledgment frame, can complete the entries in the switching tables. Figure 18.7 shows the process.

Figure 18.7 *SVC setup acknowledgment*

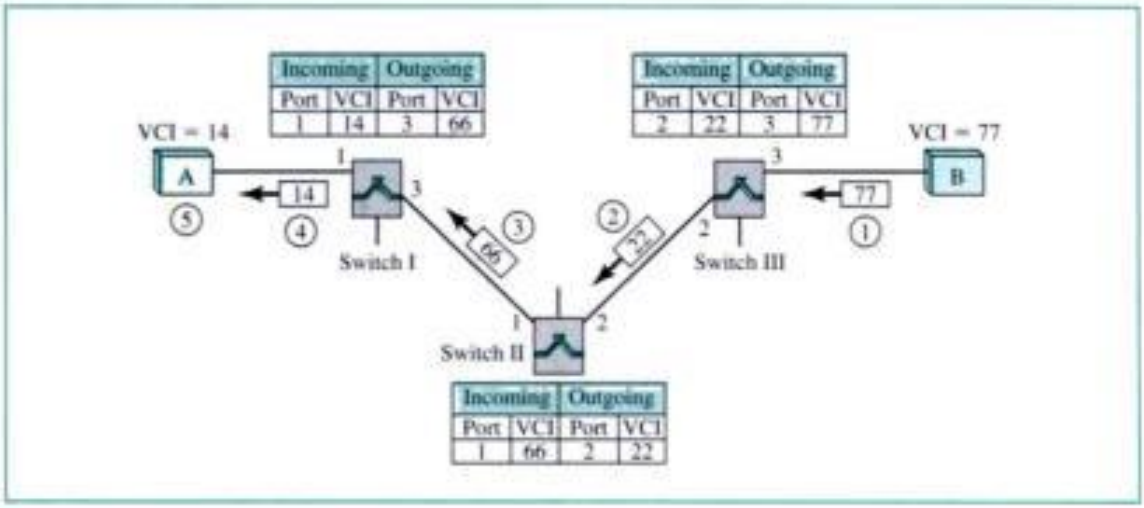

1. The destination sends an acknowledgment to switch III. The acknowledgment carries the global source and destination addresses so the switch knows which entry in the table is to be completed. The frame also carries VCI 77, chosen by the destination as the incoming VCI for frames from A. Switch III uses this VCI to complete the outgoing VCI column for this entry. Note that 77 is the incoming VCI for destination B, but outgoing VCI for switch III.
2. Switch III sends an acknowledgment to switch II that contains its incoming VCI in the table, chosen in the previous step. Switch II uses this as the outgoing VCI in the table.
3. Switch II sends an acknowledgment to switch I that contains its incoming VCI in the table, chosen in the previous step. Switch I uses this as the outgoing VCI in the table.
4. Finally switch I sends an acknowledgment to source A that contains its incoming VCI in the table, chosen in the previous step.
5. The source uses this as the outgoing VCI for the data frames to be sent to destination B.

Teardown Phase

In this phase, source A, after sending all frames to B, sends a special frame called a teardown request. Destination B responds with a teardown confirmation frame. All switches erase the corresponding entry from their tables.

Copyrighted material

18.2 FRAME RELAY

Frame Relay is a virtual circuit wide area network that was designed to respond to demands for a new type of WAN in the late 1980s and early 1990s.

1. Prior to Frame Relay, some organizations were using a virtual circuit switching network called **X.25** that performed switching at the network layer. For example, the Internet, which needs wide area networks to carry its packets from one place to another, used X.25. X.25 is still being used by the Internet, but it is being replaced by other WANs. However, X.25 has several drawbacks:
   a. X.25 has a low 64-Kbps data rate. By the 1990s, there was a need for higher-data-rate WANs.
   b. X.25 has extensive flow and error control at both the data link layer and the network layer. This was so because X.25 was designed in 1970s, when the available transmission media were more prone to errors. Flow and error control at both layers create a large overhead and slow down transmissions. X.25 requires acknowledgments for both data link layer frames and network layer packets that are sent between nodes and between source and destination.
   c. Originally X.25 was designed for private use, not for the Internet. X.25 has its own network layer. This means that the user's data are encapsulated in the network-layer packets of X.25. The Internet, however, has its own network layer, which means if the Internet wants to use X.25, the Internet must deliver its network-layer packet, called a datagram, to X.25 for encapsulation in the X.25 packet. This doubles the overhead.
2. Disappointed with X.25, some organizations started their own private WAN by leasing T-1 or T-3 lines from public service providers. This approach also has some drawbacks.
   a. If an organization has n branches spread over an area, it needs $n(n-1)/2$ T-1 or T-3 lines. The organization pays for all these lines although it may use the lines only 10 percent of the time. This can be very costly.
   b. The services provided by T-1 and T-3 lines assume that the user has fixed-rate data all the time. For example, a T-1 line is designed for a user who wants to use the line at a consistent 1.544 Mbps. This type of service is not suitable for the many users today that need to send **bursty data.** For example, a user may want to send data at 6 Mbps for 2 s, 0 Mbps (nothing) for 7 s, and 3.44 Mbps for 1 s for a total of 15.44 Mbits during a period of 10 s. Although the average data rate is still 1.544 Mbps, the T-1 line cannot accept this type of demand because it is designed for fixed-rate data, not bursty data. Bursty data requires what is called **bandwidth on demand.** The user needs different bandwidth allocations at different times.

In response to the above drawbacks, Frame Relay was designed. Frame Relay is a wide area network with the following features:

1. Frame Relay operates at a higher speed (1.544 Mbps and recently 44.376 Mbps). This means that it can easily be used instead of a mesh of T-1 or T-3 lines.
2. Frame Relay operates in just the physical and data link layers. This means it can easily be used as a backbone network to provide services to protocols that already have a network layer protocol, such as the Internet.

Copyrighted material

3. Frame Relay allows bursty data.
4. Frame Relay allows a frame size of 9000 bytes, which can accommodate a area network frame sizes.
5. Frame Relay is less expensive than other traditional WANs.
6. Frame Relay has error detection at the data link layer only. There is no flo trol or error control. There is not even a retransmission policy if a frame aged; it is silently dropped. Frame Relay was designed in this way to prov transmission capability for more reliable media and for those protocols th flow and error control at the higher layers.

Architecture

Frame Relay provides permanent virtual circuits and switched virtual circuits. Figu shows an example of a Frame Relay network connected to the Internet. The rou used, as we will see in Chapter 19, to connect LANs and WANs in the Internet figure, Frame Relay WAN is used as one link in the global Internet.

Figure 18.8 *Frame Relay network*

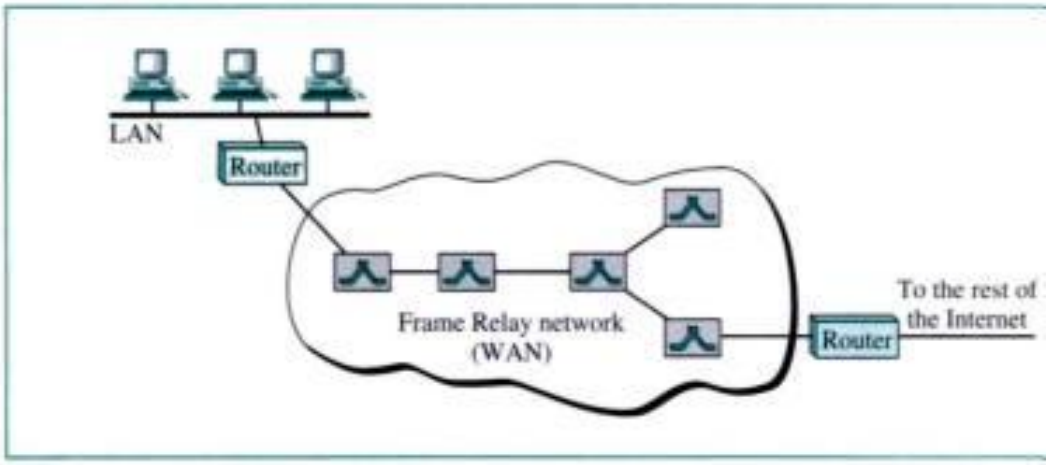

Virtual Circuits

Frame Relay is a virtual circuit network. A virtual circuit in Frame Relay is id by a number called a **data link connection identifier (DLCI).** Frame Relay us PVCs and SVCs.

VCIs in Frame Relay are called DLCIs.

Switches

Each switch in a Frame Relay network has a table to route frames. The table r an incoming port–DLCI combination with an outgoing port–DLCI combinatio described for general virtual circuit networks. The only difference is that V replaced by DLCIs.

Copyrighted material

Frame Relay Layers

Figure 18.9 shows the Frame Relay layers. Frame Relay has only physical and data link layers.

Figure 18.9 *Frame Relay layers*

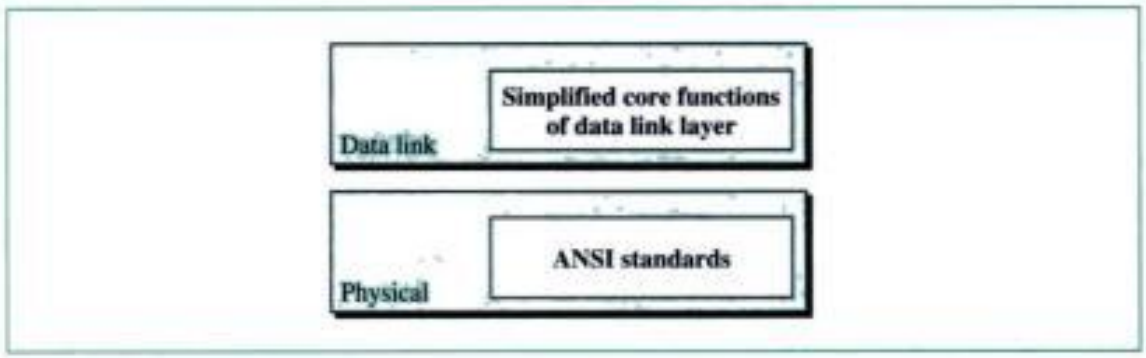

Frame Relay operates only at the physical and data link layers.

Physical Layer

No specific protocol is defined for the physical layer in Frame Relay. Instead, it is left to the implementer to use whatever is available. Frame Relay supports any of the protocols recognized by ANSI.

Data Link Layer

At the data link layer, Frame Relay employs a simplified version of HDLC. The simpler version is used because HDLC provides extensive error and flow control fields that are not needed in Frame Relay.

Figure 18.10 shows the format of a Frame Relay frame. The frame is similar to that of HDLC. In fact, the flag, FCS, and information fields are the same. However, the control field is missing because this field was needed for flow and error control which is not provided by Frame Relay. The address field defines the DLCI as well as some bits used to control congestion and traffic.

Figure 18.10 *Frame Relay frame*

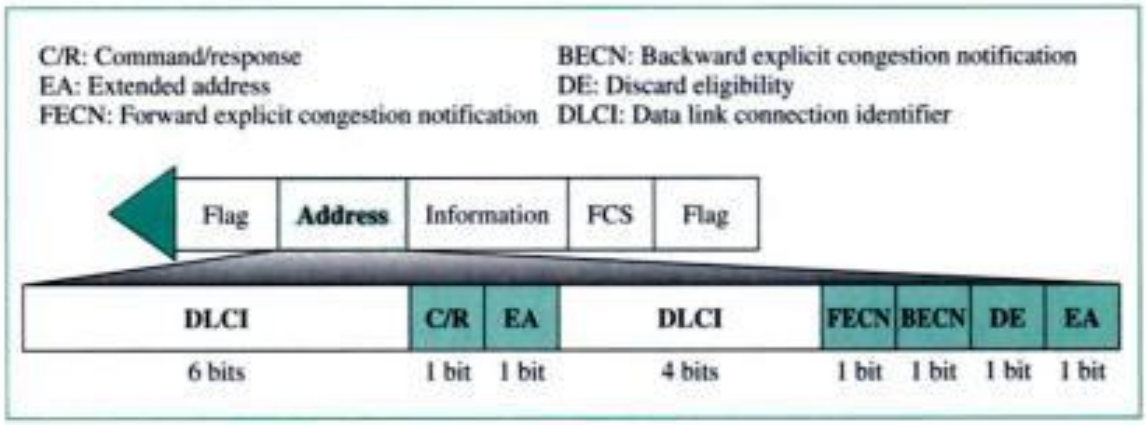

Copyrighted material

The descriptions of the fields are as follows:

- **Address (DLCI) field.** The first 6 bits of the first byte make up part 1 of the DLCI. The second part of the DLCI uses the first 4 bits of the second byte. These bits are part of the 10-bit data link connection identifier defined by the standard. The function of the DLCI was discussed previously. We will discuss extended addressing at the end of this section.
- **Command/response (C/R).** The command/response (C/R) bit is provided to allow upper layers to identify a frame as either a command or a response. It is not used by the Frame Relay protocol.
- **Extended address (EA).** The extended address (EA) bit indicates whether the current byte is the final byte of the address. An EA of 0 means that another address byte is to follow. An EA of 1 means that the current byte is the final one.
- **Forward explicit congestion notification (FECN).** The **forward explicit congestion notification (FECN)** bit can be set by any switch to indicate that traffic is congested in the direction in which the frame is traveling. This bit informs the destination that congestion has occurred. We will discuss the use of this bit when we discuss congestion control in Chapter 23.
- **Backward explicit congestion notification (BECN).** The **backward explicit congestion notification (BECN)** bit is set to indicate a congestion problem in the direction opposite to the one in which the frame is traveling. This bit informs the sender that congestion has occurred. We will discuss the use of this bit when we discuss congestion control in Chapter 23.
- **Discard eligibility (DE).** The **discard eligibility (DE)** bit indicates the priority level of the frame. In emergency situations, switches may have to discard frames to relieve bottlenecks and keep the network from collapsing due to overload. When set (DE 1), this bit tells the network to discard this frame if there is congestion. This bit can be set either by the sender of the frames (user) or by any switch in the network. We will discuss the use of this bit when we discuss congestion control in Chapter 23.

Frame Relay does not provide flow or error control; they must be provided by the upper-layer protocols.

Extended Address

To increase the range of DLCIs, the Frame Relay address has been extended from the original 2-byte address to 3- or 4-byte addresses. Figure 18.11 shows the different addresses. Note that the EA field defines the number of bytes; it is 1 in the last byte of the address, and it is 0 in the other bytes. Note that in the 3- and 4-byte formats, the bit before the last bit is set to 0.

FRADs

To handle frames arriving from other protocols, Frame Relay uses a device called a **Frame Relay assembler/disassembler (FRAD).** A FRAD assembles and disassembles frames coming from other protocols to allow them to be carried by Frame Relay frames.

Copyrighted material

Figure 18.11 *Three address formats*

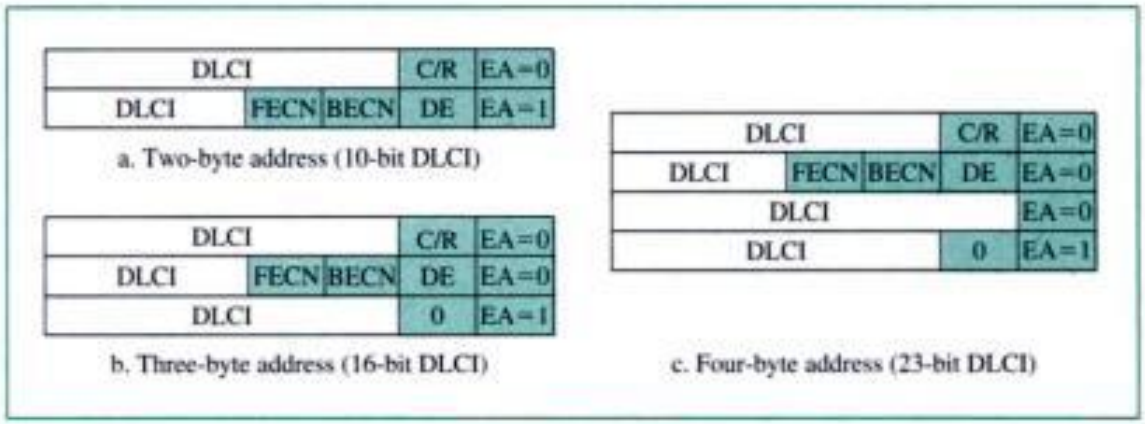

Figure 18.12 *FRAD*

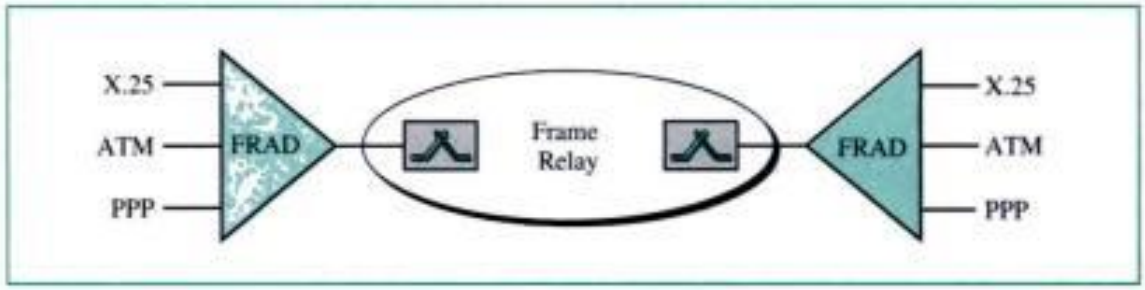

A FRAD can be implemented as a separate device or as part of a switch. Figure 18.12 shows two FRADs connected to a Frame Relay network.

VOFR

Frame Relay networks offer an option called **Voice Over Frame Relay (VOFR)** that sends voice through the network. Voice is digitized using PCM and then compressed. The result is sent as data frames over the network. This feature allows the inexpensive sending of voice over long distances. However, note that the quality of voice is not as good as voice over a circuit-switched network such as the telephone network. Also, the varying delay mentioned earlier sometimes corrupts real-time voice.

LMI

Frame Relay was originally designed to provide PVC connections. There was not, therefore, a provision for controlling or managing interfaces. **Local management information (LMI)** is a protocol added recently to the Frame Relay protocol to provide more management features. In particular, LMI can provide

- A keep-alive mechanism to check if data are flowing.
- A multicast mechanism to allow a local end system to send frames to more than one remote end system.
- A mechanism to allow an end system to check the status of a switch (e.g., to see if the switch is congested).

Copyrighted material

Congestion Control and Quality of Service

One of the nice features of Frame Relay is that it provides **congestion control** and **quality of service.** We have not discussed these features yet. In Chapter 23, we introduce these two important aspects of networking and discuss how they are implemented in Frame Relay and some other networks.

18.3 ATM

Asynchronous Transfer Mode (ATM) is the **cell relay** protocol designed by the ATM Forum and adopted by the ITU-T. The combination of ATM and SONET will allow high-speed interconnection of all the world's networks. In fact, ATM can be thought of as the "highway" of the information superhighway.

Design Goals

Among the challenges faced by the designers of ATM, six stand out.

1. Foremost is the need for a transmission system to optimize the use of high-data-rate transmission media, in particular optical fiber. In addition to offering large bandwidths, newer transmission media and equipment are dramatically less susceptible to noise degradation. A technology is needed to take advantage of both factors and thereby maximize data rates.
2. The system must interface with existing systems and provide wide area interconnectivity between them without lowering their effectiveness or requiring their replacement.
3. The design must be implemented inexpensively so that cost would not be a barrier to adoption. If ATM is to become the backbone of international communications, as intended, it must be available at low cost to every user who wants it.
4. The new system must be able to work with and support the existing telecommunications hierarchies (local loops, local providers, long-distance carriers, and so on).
5. The new system must be connection-oriented to ensure accurate and predictable delivery.
6. Last but not least, one objective is to move as many of the functions to hardware as possible (for speed) and eliminate as many software functions as possible (again for speed).

Problems

Before we discuss the solutions to these design requirements, it is useful to examine some of the problems associated with existing systems.

Frame Networks

Before ATM, data communications at the data link layer had been based on frame switching and frame networks. Different protocols use frames of varying size and

Copyrighted material

intricacy. As networks become more complex, the information that must be carried in the header becomes more extensive. The result is larger and larger headers relative to the size of the data unit. In response, some protocols have enlarged the size of the data unit to make header use more efficient (sending more data with the same size header). Unfortunately, large data fields create waste. If there is not much information to transmit, much of the field goes unused. To improve utilization, some protocols provide variable frame sizes to users.

Mixed Network Traffic

As you can imagine, the variety of frame sizes makes traffic unpredictable. Switches, multiplexers, and routers must incorporate elaborate software systems to manage the various sizes of frames. A great deal of header information must be read, and each bit counted and evaluated to ensure the integrity of every frame. Internetworking among the different frame networks is slow and expensive at best, and impossible at worst.

Another problem is that of providing consistent data rate delivery when frame sizes are unpredictable and can vary so dramatically. To get the most out of broadband technology, traffic must be time-division-multiplexed onto shared paths. Imagine the results of multiplexing frames from two networks with different requirements (and frame designs) onto one link (see Fig. 18.13). What happens when line 1 uses large frames (usually data frames) while line 2 uses very small frames (the norm for audio and video information)?

Figure 18.13 *Multiplexing using different frame sizes*

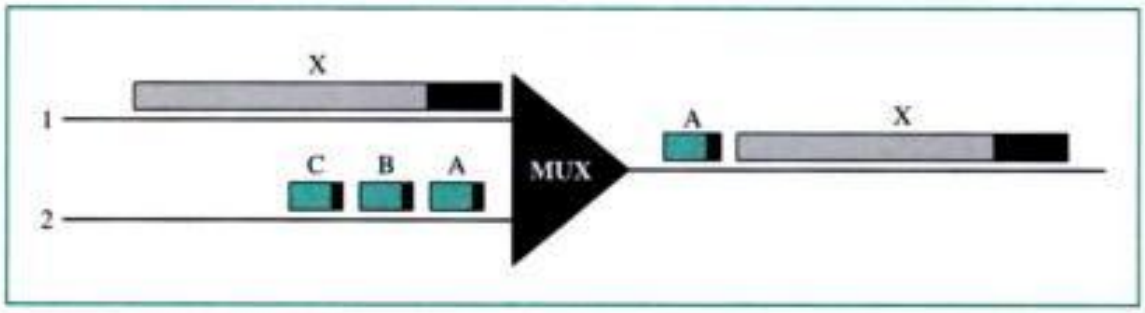

If line 1's gigantic frame X arrives at the multiplexer even a moment earlier than line 2's frames, the multiplexer puts frame X onto the new path first. After all, even if line 2's frames have priority, the multiplexer has no way of knowing to wait for them and processes the frame that has arrived. Frame A must therefore wait for the entire X bit stream to move into place before it can follow. The sheer size of X creates an unfair delay for frame A. The same imbalance can affect all the frames from line 2.

Because audio and video frames ordinarily are small, mixing them with conventional data traffic often creates unacceptable delays of this type and makes shared frame links unusable for audio and video information. Traffic must travel over different paths, in much the same way that automobile and train traffic does. But to fully utilize broad bandwidth links, we need to be able to send all kinds of traffic over the same links.

Copyrighted material

Cell Networks

Many of the problems associated with frame internetworking are solved by adopting a concept called cell networking. A cell is a small data unit of fixed size. In a **cell network,** which uses the **cell** as the basic unit of data exchange, all data are loaded into identical cells that can be transmitted with complete predictability and uniformity. As frames of different sizes and formats reach the cell network from a tributary network, they are split into multiple small data units of equal length and are loaded into cells. The cells are then multiplexed with other cells and routed through the cell network. Because each cell is the same size and all are small, the problems associated with multiplexing different-sized frames are avoided.

A cell network uses the cell as the basic unit of data exchange. A cell is defined as a small, fixed-sized block of information.

Figure 18.14 shows the multiplexer from Figure 18.13 with the two lines sending cells instead of frames. Frame X has been segmented into three cells: X, Y, and Z. Only the first cell from line 1 gets put on the link before the first cell from line 2. The cells from the two lines are interleaved so that none suffers a long delay.

Figure 18.14 *Multiplexing using cells*

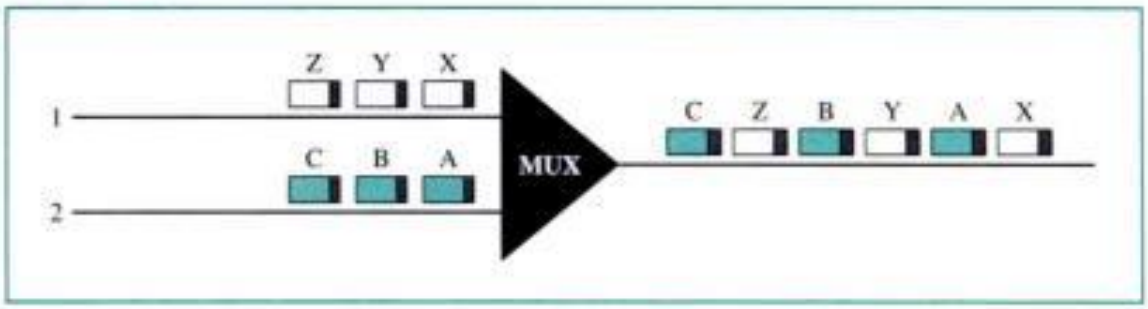

A second point in this same scenario is that the high speed of the links coupled with the small size of the cells means that, despite interleaving, cells from each line arrive at their respective destinations in an approximation of a continuous stream (much as a movie appears to your brain to be continuous action when in fact it is really a series of separate still photographs). In this way, a cell network can handle real-time transmissions, such as a phone call, without the parties being aware of the segmentation or multiplexing at all.

Asynchronous TDM

ATM uses asynchronous time-division multiplexing—that is why it is called Asynchronous Transfer Mode—to multiplex cells coming from different channels. It uses fixed-size slots (size of a cell). ATM multiplexers fill a slot with a cell from any input channel that has a cell; the slot is empty if none of the channels has a cell to send.

Figure 18.15 shows how cells from three inputs are multiplexed. At the first tick of the clock, channel 2 has no cell (empty input slot), so the multiplexer fills the slot with

Copyrighted material

Figure 18.15 *ATM multiplexing*

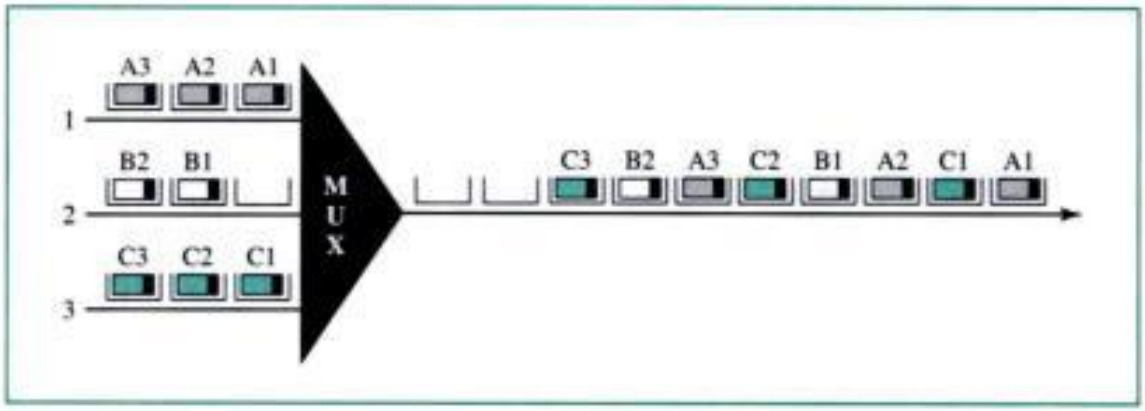

a cell from the third channel. When all the cells from all the channels are multiplexed, the output slots are empty.

Architecture

ATM is a cell-switched network. The user access devices, called the endpoints, are connected through a **user-to-network interface (UNI)** to the switches inside the network. The switches are connected through **network-to-network interfaces (NNIs).** Figure 18.16 shows an example of an ATM network.

Figure 18.16 *Architecture of an ATM network*

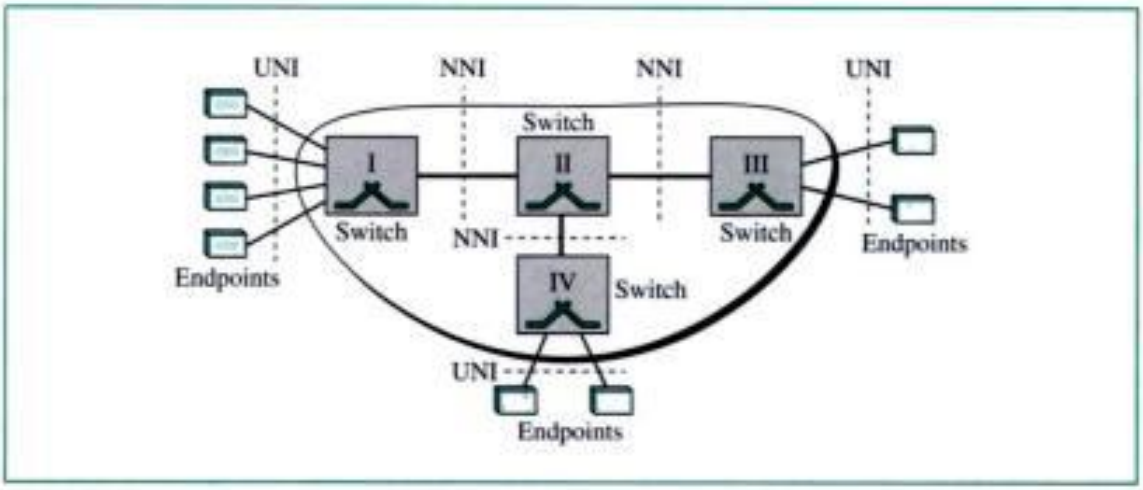

Virtual Connection

Connection between two endpoints is accomplished through transmission paths (TPs), virtual paths (VPs), and virtual circuits (VCs). A **transmission path (TP)** is the physical connection (wire, cable, satellite, and so on) between an endpoint and a switch or between two switches. Think of two switches as two cities. A transmission path is the set of all highways that directly connects the two cities.

A transmission path is divided into several virtual paths. A **virtual path (VP)** provides a connection or a set of connections between two switches. Think of a virtual

Copyrighted material

path as a highway that connects two cities. Each highway is a virtual path; the set of all highways is the transmission path.

Cell networks are based on **virtual circuits (VCs).** All cells belonging to a single message follow the same virtual circuit and remain in their original order until they reach their destination. Think of a virtual circuit as the lanes of a highway (virtual path). Figure 18.17 shows the relationship between a transmission path (a physical connection), virtual paths (a combination of virtual circuits that are bundled together because parts of their paths are the same), and virtual circuits that logically connect two points.

Figure 18.17 *TP, VPs, and VCs*

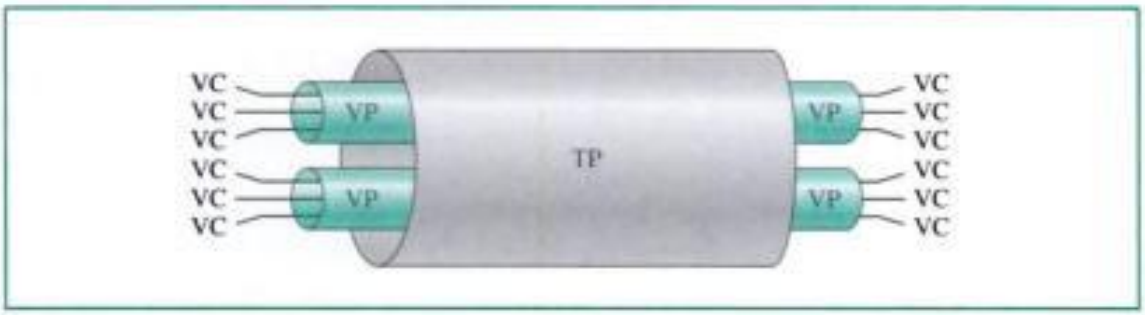

To better understand the concept of VPs and VCs, look at Figure 18.18. In this figure, eight endpoints are communicating using four VCs. However, the first two VCs seem to share the same virtual path from switch I to switch III, so it is reasonable to bundle these two VCs together to form one VP. On the other hand, it is clear that the other two VCs share the same path from switch I to switch IV, so it is also reasonable to combine them to form one VP.

Figure 18.18 *Example of VPs and VCs*

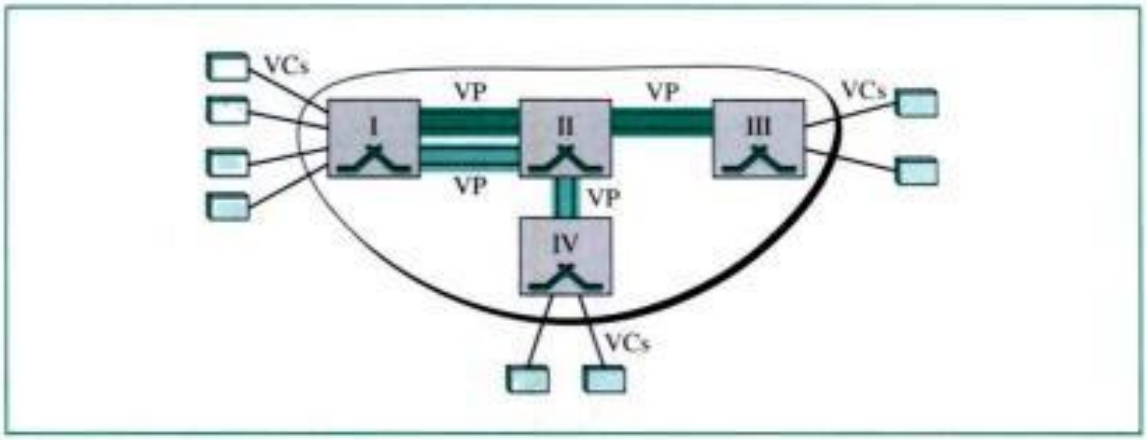

Identifiers

In a virtual circuit network, to route data from one endpoint to another, the virtual connections need to be identified. For this purpose, the designers of ATM created a

Copyrighted material

hierarchical identifier with two levels: a **virtual path identifier (VPI)** and a **virtual circuit identifier (VCI).** The VPI defines the specific VP, and the VCI defines a particular VC inside the VP. The VPI is the same for all virtual connections that are bundled (logically) into one VP.

Note that a virtual connection is defined by a pair of numbers: the VPI and the VCI.

Figure 18.19 shows the VPIs and VCIs for a transmission path. The rationale for dividing an identifier into two parts will become clear when we discuss routing in an ATM network.

Figure 18.19 *Connection identifiers*

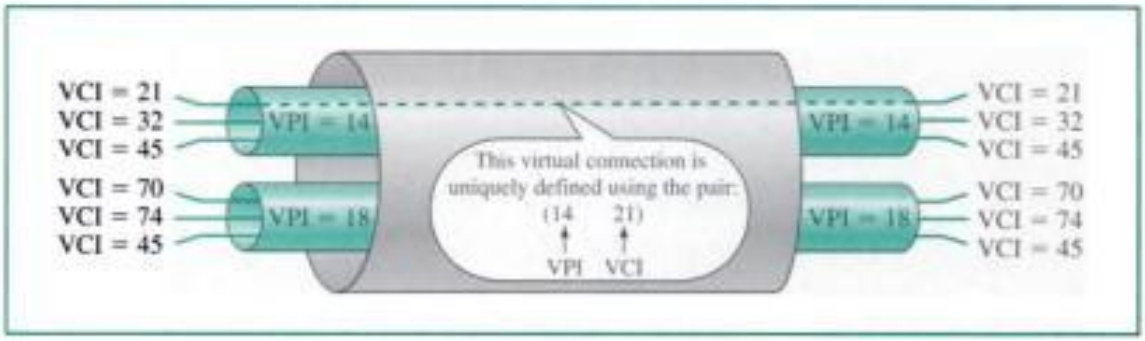

The lengths of the VPIs for UNIs and NNIs are different. In a UNI, the VPI is 8 bits, whereas in an NNI, the VPI is 12 bits. The length of the VCI is the same in both interfaces (16 bits). We therefore can say that a virtual connection is identified by 24 bits in a UNI and by 28 bits in an NNI (see Fig. 18.20).

The whole idea behind dividing a virtual connection identifier into two parts is to allow hierarchical routing. Most of the switches in a typical ATM network are routed using VPIs. The switches at the boundaries of the network, those that interact directly with the endpoint devices, use both VPIs and VCIs.

Figure 18.20 *Virtual connection identifiers in UNIs and NNIs*

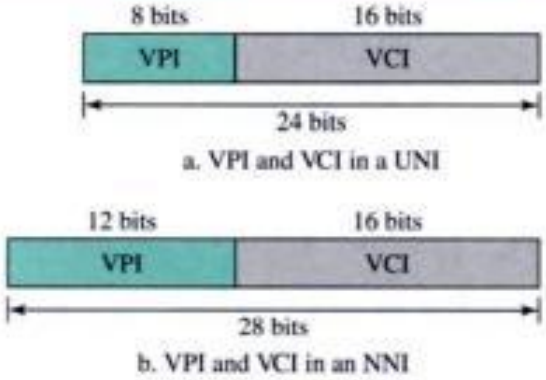

Copyrighted material

Cells

The basic data unit in an ATM network is called a cell. A cell is only 53 bytes long with 5 bytes allocated to header and 48 bytes carrying payload (user data may be less than 48 bytes). We will study in detail the fields of a cell, but for the moment it suffices to say that most of the header is occupied by the VPI and VCI that define the virtual connection through which a cell should travel from an endpoint to a switch or from a switch to another switch. Figure 18.21 shows the cell structure.

Figure 18.21 *An ATM cell*

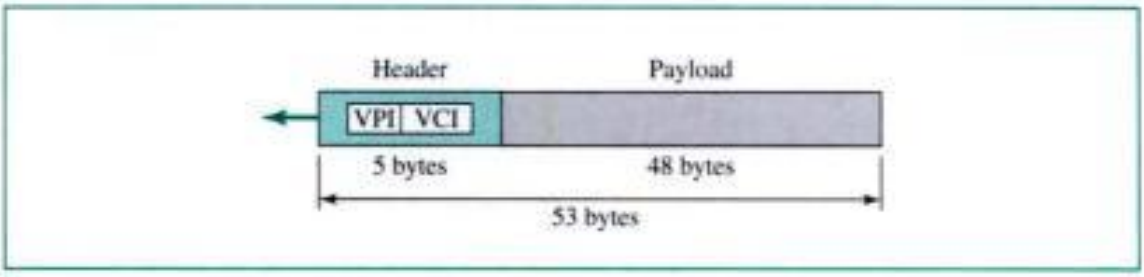

Connection Establishment and Release

Like Frame Relay, ATM uses two types of connections: PVC and SVC.

PVC A permanent virtual circuit connection is established between two endpoints by the network provider. The VPIs and VCIs are defined for the permanent connections, and the values are entered for the tables of each switch.

SVC In a switched virtual circuit connection, each time an endpoint wants to make a connection with another endpoint, a new virtual circuit must be established. ATM cannot do the job by itself, but needs network layer addresses and the services of another protocol (such as IP). The signaling mechanism of this other protocol makes a connection request using the network layer addresses of the two endpoints. The actual mechanism depends on the network layer protocol.

Switching

ATM uses switches to route the cell from a source endpoint to the destination endpoint. A switch routes the cell using both the VPIs and the VCIs. The routing requires the whole identifier. Figure 18.22 shows how a VPC switch routes the cell. A cell with a VPI of 153 and VCI of 67 arrives at switch interface (port) 1. The switch checks its switching table, which stores six pieces of information per row: arrival interface number, incoming VPI, incoming VCI, corresponding outgoing interface number, the new VPI, and the new VCI. The switch finds the entry with the interface 1, VPI 153, and VCI 67 and discovers that the combination corresponds to output interface 3, VPI 140, and VCI 92. It changes the VPI and VCI in the header to 140 and 92, respectively, and sends the cell out through interface 3.

Switching Fabric

The switching technology has created many interesting features to increase the speed of switches to handle data. Because switches are used in both data link layer and

Copyrighted material

Figure 18.22 *Routing with a switch*

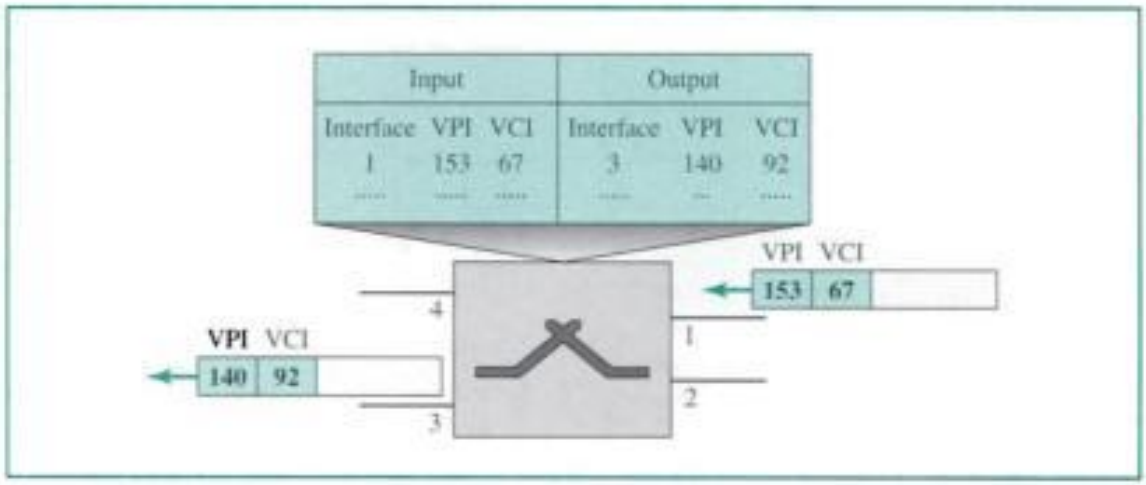

network layer, we do not discuss these variations here. For more information, see Appendix F.

ATM Layers

The ATM standard defines three layers. They are, from top to bottom, the application adaptation layer, the ATM layer, and the physical layer (see Fig. 18.23).

Figure 18.23 *ATM layers*

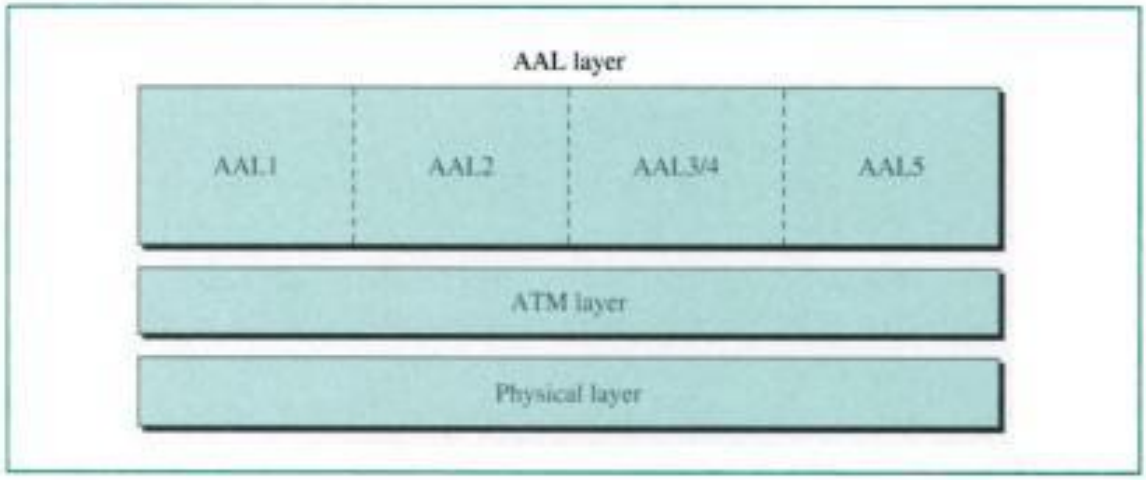

The endpoints use all three layers while the switches use only the two bottom layers (see Fig. 18.24).

Physical Layer

Like Ethernet and wireless LANs, ATM cells can be carried by any physical layer carrier.

SONET The original design of ATM was based on **SONET** (see Chapter 9) as the physical layer carrier. SONET is preferred for two reasons. First, the high data rate

Copyrighted material

Figure 18.24 *ATM layers in endpoint devices and switches*

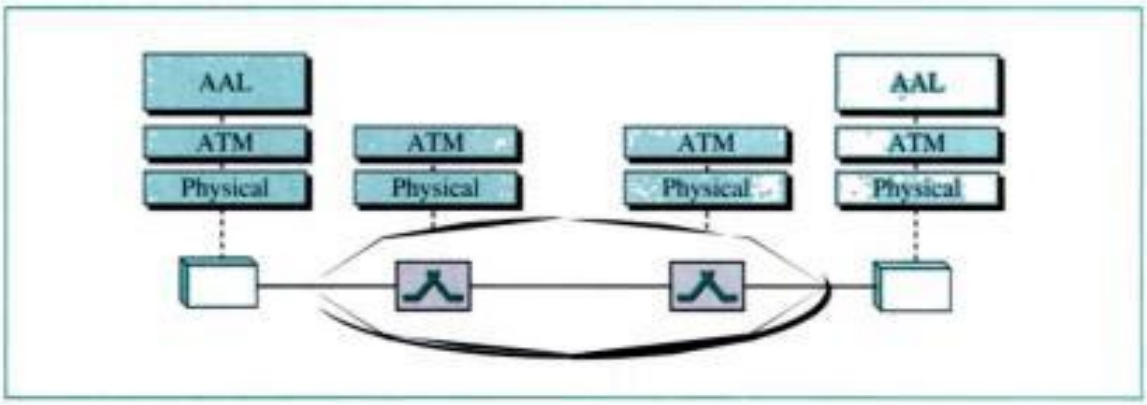

of SONET's carrier reflects the design and philosophy of ATM. Second, in using SONET, the boundaries of cells can be clearly defined. As we saw in Chapter 9, SONET specifies the use of a pointer to define the beginning of a payload. If the beginning of the first ATM cell is defined, the rest of the cells in the same payload can easily be identified because there are no gaps between cells. Just count 53 bytes ahead to find the next cell.

Other Physical Technologies ATM does not limit the physical layer to SONET. Other technologies, even wireless, may be used. However, the problem of cell boundaries must be solved. One solution is for the receiver to guess the end of the cell and apply the CRC to the 5-byte header. If there is no error, the end of the cell is found, to a high probability, correctly. Count 52 bytes back to find the beginning of the cell.

ATM Layer

The **ATM layer** provides routing, traffic management, switching, and multiplexing services. It processes outgoing traffic by accepting 48-byte segments from the AAL sublayers and transforming them into 53-byte cells by the addition of a 5-byte header (see Fig. 18.25).

Header Format ATM uses two formats for this header, one for user-to-network interface (UNI) cells and another for network-to-network interface (NNI) cells. Figure 18.26

Figure 18.25 *ATM layer*

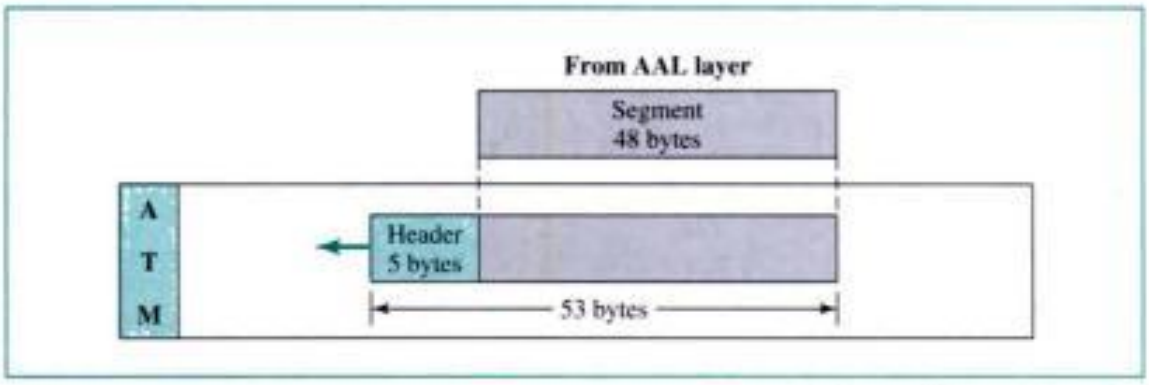

Copyrighted material

Figure 18.26 *ATM headers*

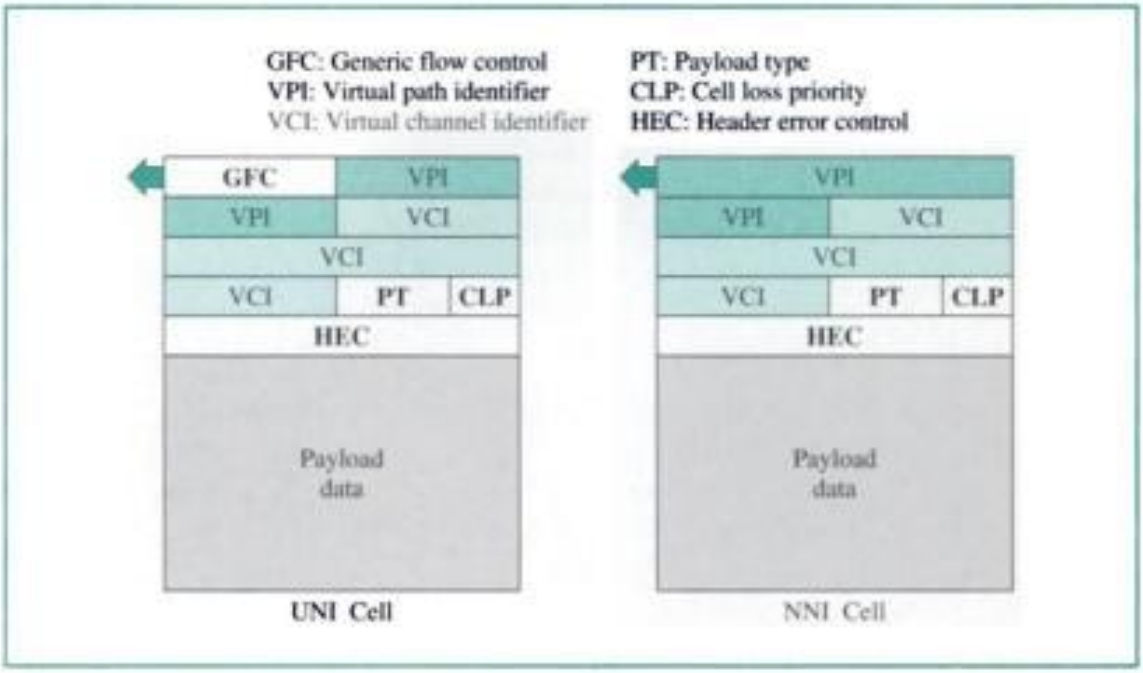

shows these headers in the byte-by-byte format preferred by the ITU-T (each row represents a byte).

- **Generic flow control (GFC).** The 4-bit GFC field provides flow control at the UNI level. The ITU-T has determined that this level of flow control is not necessary at the NNI level. In the NNI header, therefore, these bits are added to the VPI. The longer VPI allows more virtual paths to be defined at the NNI level. The format for this additional VPI has not yet been determined.
- **Virtual path identifier (VPI).** The VPI is an 8-bit field in a UNI cell and a 12-bit field in an NNI cell (see above).
- **Virtual channel identifier (VCI).** The VCI is a 16-bit field in both frames.
- **Payload type (PT).** In the three-bit PT field, the first bit defines the payload as user data or managerial information. The interpretation of the last 2 bits depends on the first bit.
- **Cell loss priority (CLP).** The 1-bit CLP field is provided for congestion control. A cell with its CLP bit set to 1 must be retained as long as there are cells with a CLP of 0. We discuss congestion control and quality of service in an ATM network in Chapter 23.
- **Header error correction (HEC).** The HEC is a code computed for the first 4 bytes of the header. It is a CRC with the divisor $x^8 + x^2 + x + 1$ that is used to correct single-bit errors and a large class of multiple-bit errors.

Application Adaptation Layer (AAL)

The **application adaptation layer (AAL)** was designed to enable two ATM concepts. First, ATM must accept any type of payload, both data frames and streams of bits. A data frame can come from an upper-layer protocol that creates a clearly defined frame to be sent to a carrier network such as ATM. A good example is the Internet. ATM

Copyrighted material

must also carry multimedia payload. It can accept continuous bit streams and break them into chunks to be encapsulated into a cell at the ATM layer. AAL uses two sublayers to accomplish these tasks.

Whether the data are a data frame or a stream of bits, the payload must be segmented into 48-byte segments to be carried by a cell. At the destination, these segments need to be reassembled to recreate the original payload. The AAL defines a sublayer, called a **segmentation and reassembly (SAR)** sublayer, to do so. Segmentation is at the source; reassembly, at the destination.

Before data are segmented by SAR, they must be prepared to guarantee the integrity of the data. This is done by a sublayer called the **convergence sublayer (CS).**

ATM defines four versions of the AAL: **AAL1, AAL2, AAL3/4,** and **AAL5.**

AAL1 **AAL1** supports applications that transfer information at constant bit rates, such as video and voice. It allows ATM to connect existing digital telephone networks such as voice channels and T-lines. Figure 18.27 shows how a bit stream of data is chopped into 47-byte chunks and encapsulated in cells.

Figure 18.27 *AAL1*

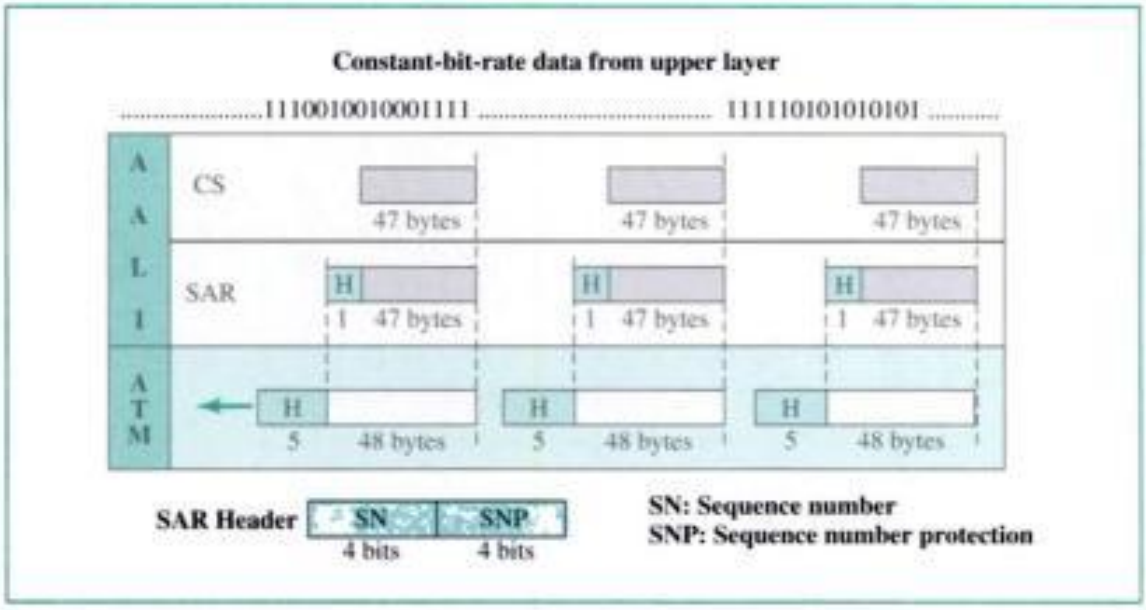

The CS sublayer divides the bit stream into 47-byte segments and passes them to the SAR sublayer below. Note that the CS sublayer does not add a header.

The SAR sublayer adds 1 byte of header and passes the 48-byte segment to the ATM layer. The header has two fields:

- **Sequence number (SN).** This 4-bit field defines a sequence number to order the bits. The first bit is sometimes used for timing, which leaves 3 bits for sequencing (modulo 8).
- **Sequence number protection (SNP).** The second 4-bit field protects the first field. The first 3 bits automatically correct the SN field. The last bit is a parity bit that detects error over all 8 bits.

Copyrighted material

AAL2 **AAL2** was originally intended to support a variable-data-rate bit stream, but it has been redesigned. It is now used for low-bit-rate traffic and short-frame traffic such as audio (compressed or uncompressed), video, or fax. A good example of AAL2 use is in mobile telephony. AAL2 allows the multiplexing of short frames into one cell.

Figure 18.28 shows the process of encapsulating a short frame from the same source (the same user of mobile phone) or from several sources (several users of mobile telephones) into one cell.

Figure 18.28 *AAL2*

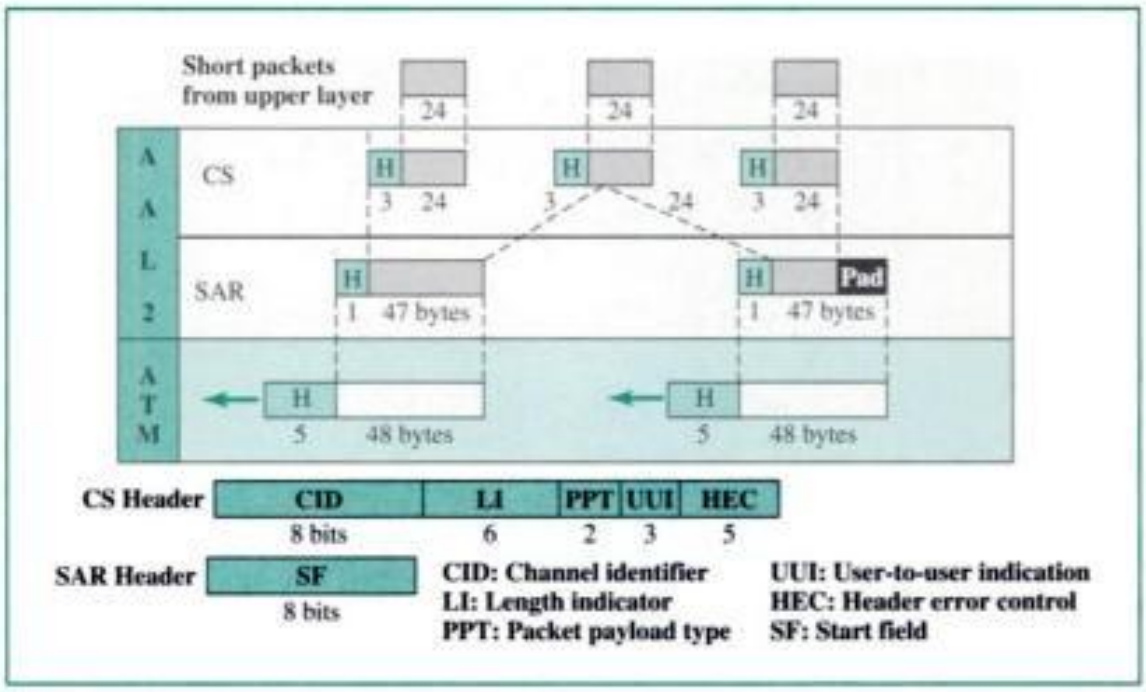

The CS layer overhead consists of five fields:

- **Channel identifier (CID).** The 8-bit CID field defines the channel (user) of the short packet.
- **Length indicator (LI).** The 6-bit LI field indicates how much of the final packet is data.
- **Packet payload type (PPT).** The PPT field defines the type of the packet.
- **User-to-user indicator (UUI).** The UUI field can be used by end-to-end users.
- **Header error control (HEC).** The last 5 bits are used to correct errors in the header.

The only overhead at the SAR layer is the start field (SF) that defines the offset from the beginning of the packet.

AAL3/4 Initially, AAL3 was intended to support connection-oriented data services and AAL4 to support connectionless services. As they evolved, however, it became evident that the fundamental issues of the two protocols were the same. They have therefore been combined into a single format called **AAL3/4.** Figure 18.29 shows the AAL3/4 sublayer.

Copyrighted material

Figure 18.29 *AAL3/4*

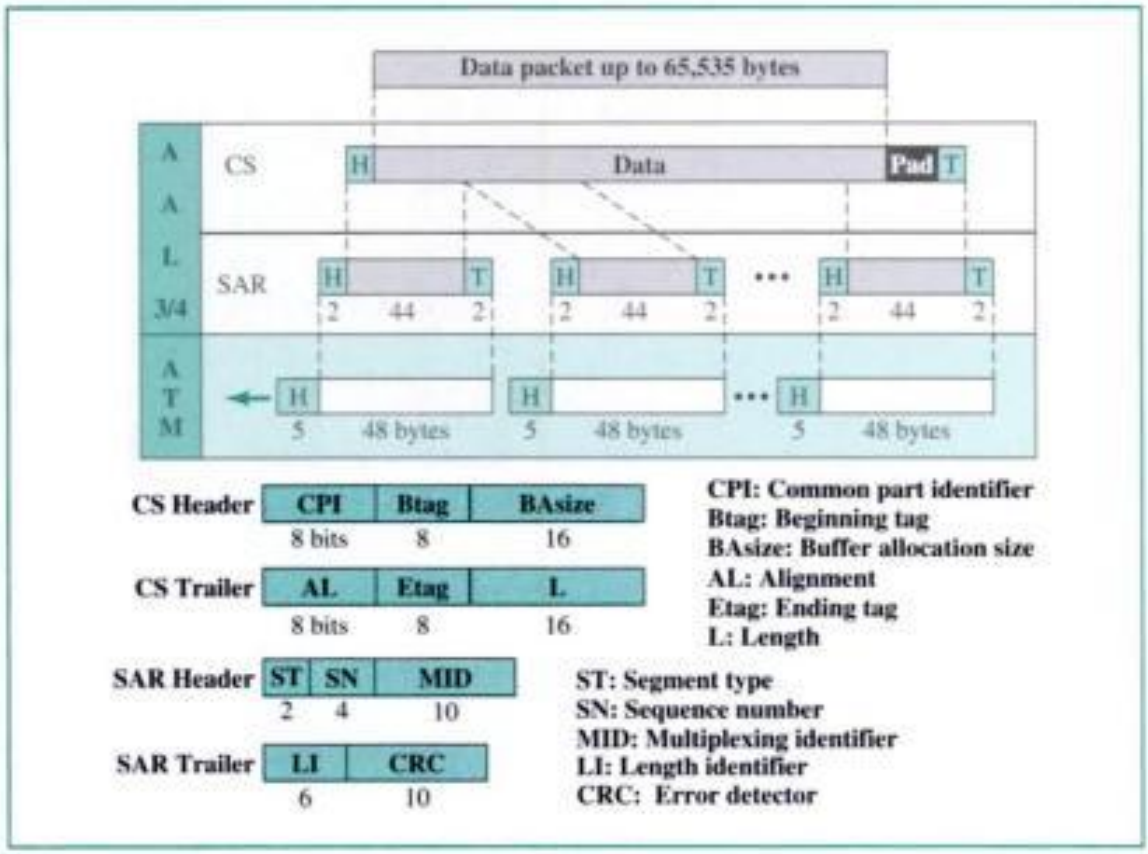

The CS layer header and trailer consists of six fields:

- **Common part identifier (CPI).** The CPI defines how the subsequent fields are to be interpreted. The value at present is 0.
- **Begin tag (Btag).** The value of this field is repeated in each cell to identify all the cells beginning to the same packet. The value is the same as the Etag (see below).
- **Buffer allocation size (BAsize).** The 2-byte BA field tells the receiver what size buffer is needed for the coming data.
- **Alignment (AL).** The 1-byte AL field is included to make the rest of the trailer 4 bytes long.
- **Ending tag (Etag).** The 1-byte ET field serves as an ending flag. Its value is the same as that of the beginning tag.
- **Length (L).** The 2-byte L field indicates the length of the data unit.

The SAR header and trailer consist of five fields:

- **Segment type (ST).** The 2-bit ST identifier specifies the position of the segment in the message: beginning (00), middle (01), or end (10). A single-segment message has an ST of 11.
- **Sequence number (SN).** This field is the same as defined previously.
- **Multiplexing identification (MID).** The 10-bit MID field identifies cells coming from different data flows and multiplexed on the same virtual connection.

Copyrighted material

- **Length indicator (LI).** This field defines how much of the packet is data, not padding.
- **CRC.** The last 10 bits of the trailer is a CRC for the entire data unit.

AAL5 AAL3/4 provides comprehensive sequencing and error control mechanisms that are not necessary for every application. For these applications, the designers of ATM have provided a fifth AAL sublayer, called the **simple and efficient adaptation layer (SEAL). AAL5** assumes that all cells belonging to a single message travel sequentially and that control functions are included in the upper layers of the sending application. Figure 18.30 shows the AAL5 sublayer.

Figure 18.30 *AAL5*

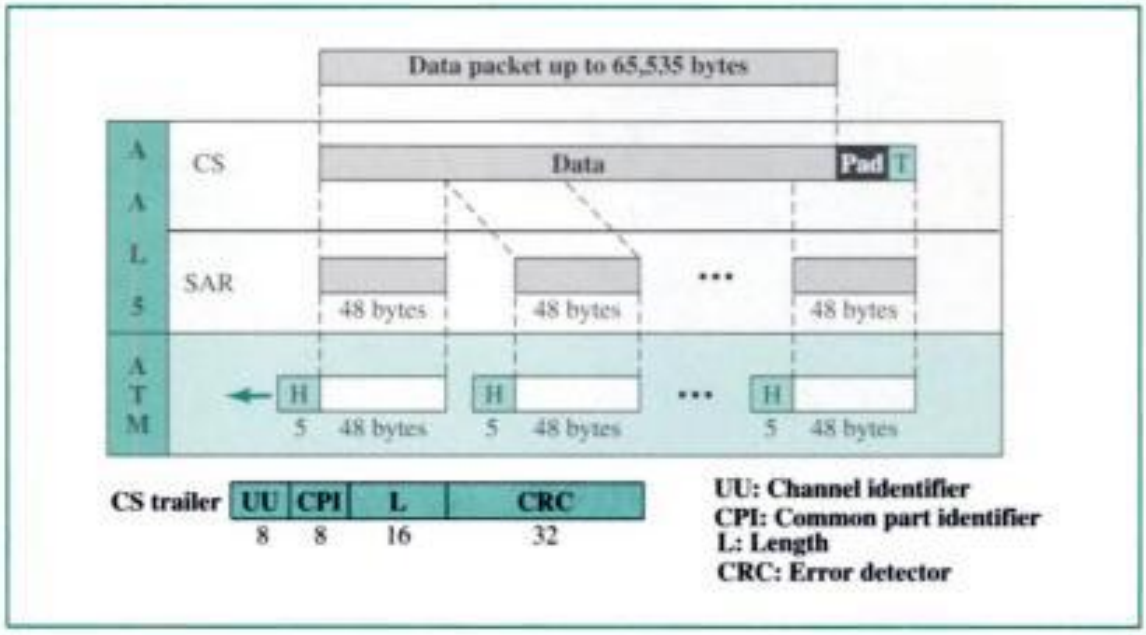

The four trailer fields in the CS layer are

- **User-to-user (UU).** This field is used by end users, as described previously.
- **Common part identifier (CPI).** This field is the same as defined previously.
- **Length (L).** The 2-byte L field indicates the length of the original data.
- **CRC.** The last 4 bytes are for error control on the entire data unit.

Congestion Control and Quality of Service

ATM has a very developed congestion control and quality of service that we discuss in Chapter 23.

ATM LANs

A lot of effort has been made to apply ATM technology to LANs. The result is the ATM LAN. We talk about ATM LANs in Appendix G.

Copyrighted material

18.4 KEY TERMS

AAL1
AAL2
AAL3/4
AAL5
application adaptation layer (AAL)
Asynchronous Transfer Mode (ATM)
ATM layer
bandwidth on demand
bursty data
cell
cell network
cell relay
congestion control
convergence sublayer (CS)
data link connection identifier (DLCI)
data transfer phase
Frame Relay
Frame Relay assembler/disassembler (FRAD)
Local Management Information (LMI)
network-to-network interface (NNI)
permanent virtual circuit (PVC)
quality of service (QoS)
segmentation and reassembly (SAR)
setup phase
Simple and Efficient Adaptation Layer (SEAL)
switched virtual circuit (SVC)
teardown phase
transmission path (TP)
user-to-network interface (UNI)
virtual circuit (VC)
virtual circuit identifier (VCI)
virtual circuit switching
virtual path (VP)
virtual path identifier (VPI)
Voice Over Frame Relay (VOFR)
X.25

18.5 SUMMARY

- Virtual circuit switching is a data link technology in which links are shared.
- A virtual circuit identifer (VCI) identifies a frame between two switches.
- The three phases in virtual circuit switching are setup, data transfer, and teardown.
- The setup phase can use the permanent virtual circuit (PVC) approach or the switched virtual circuit (SVC) approach.
- Frame Relay is a relatively high-speed, cost-effective technology that can handle bursty data.
- Both PVC and SVC connections are used in Frame Relay.
- The data link connection identifier (DLCI) identifies a virtual circuit in Frame Relay.
- Asynchronous Transfer Mode (ATM) is a cell relay protocol that, in combination with SONET, allows high-speed connections.
- A cell is a small, fixed-size block of information.
- The ATM data packet is a cell composed of 53 bytes (5 bytes of header and 48 bytes of payload).
- ATM eliminates the varying delay times associated with different-sized packets.
- ATM can handle real-time transmission.
- A user-to-network interface (UNI) is the interface between a user and an ATM switch.

Copyrighted material

- A network-to-network interface (NNI) is the interface between two ATM switches.
- In ATM, connection between two endpoints is accomplished through transmission paths (TPs), virtual paths (VPs), and virtual circuits (VCs).
- In ATM, a combination of a virtual path identifier (VPI) and a virtual circuit identifier identifies a virtual connection.
- The ATM standard defines three layers:
  a. Application adaptation layer (AAL) accepts transmissions from upper-layer services and maps them into ATM cells.
  b. ATM layer provides routing, traffic management, switching, and multiplexing services.
  c. Physical layer defines the transmission medium, bit transmission, encoding, and electrical-to-optical transformation.
- The AAL is divided into two sublayers: convergence sublayer (CS) and segmentation and reassembly (SAR).
- There are four different AALs, each for a specific data type:
  a. AAL1 for constant-bit-rate stream.
  b. AAL2 for short packets.
  c. AAL3/4 for conventional packet switching (virtual circuit approach or datagram approach).
  d. AAL5 for packets requiring no sequencing and no error control mechanism.

18.6 PRACTICE SET

Review Questions

1. Compare the format of an HDLC protocol frame with a Frame Relay protocol frame. Which fields are missing in the Frame Relay protocol frame? Which fields are added in the Frame Relay protocol frame?
2. Why is the control field from HDLC totally dropped from Frame Relay?
3. HDLC has three types of frames (I-frame, S-frame, and U-frame). Which one corresponds to the Frame Relay frame?
4. There are no sequence numbers in Frame Relay. Why?
5. Can two devices connected to the same Frame Relay network use the same DLCIs?
6. Why is Frame Relay a better solution for connecting LANs than T-1 lines?
7. Compare an SVC with a PVC.
8. Discuss the Frame Relay physical layer.
9. Why is multiplexing more efficient if all the data units are the same size?
10. How does an NNI differ from a UNI?
11. What is the relationship between TPs, VPs, and VCs?
12. How is an ATM virtual-connection identified?
13. Name the ATM layers and their functions.

Copyrighted material

Multiple-Choice Questions

14. Frame Relay operates in the _____.
    a. Physical layer
    b. Data link layer
    c. Physical and data link layers
    d. Physical, data link, and network layers
15. In the data link layer, Frame Relay uses _____.
    a. BSC protocol
    b. A simplified HDLC protocol
    c. LAPB
    d. Any ANSI standard protocol
16. Routing and switching in Frame Relay are performed by the _____ layer.
    a. Physical
    b. Data link
    c. Network
    d. (b) and (c)
17. Frame Relay is unsuitable for _____ due to possible delays in transmission resulting from variable frame sizes.
    a. Real-time video
    b. File transfers
    c. Fixed-rate data communication
    d. All the above
18. Frame Relay provides _____ connections.
    a. PVC
    b. SVC
    c. (a) and (b)
    d. None of the above
19. The Frame Relay address field is _____ in length.
    a. 4 bytes
    b. 2 bytes
    c. 3 bytes
    d. Any of the above
20. A device called a(n) _____ allows frames from an ATM network to be transmitted across a Frame Relay network.
    a. LMI
    b. VOFR
    c. FRAD
    d. DLCI
21. _____ is a protocol to control and manage interfaces in Frame Relay networks.

Copyrighted material

a. LMI
b. VOFR
c. FRAD
d. DLCI

22. _____ is a Frame Relay option that transmits voice through the network.
a. LMI
b. VOFR
c. FRAD
d. DLCI

23. In data communications, ATM is an acronym for _____.
a. Automated Teller Machine
b. Automatic Transmission Model
c. Asynchronous Telecommunication Method
d. Asynchronous Transfer Mode

24. Because ATM _____, which means that cells follow the same path, the cells do not usually arrive out of order.
a. Is asynchronous
b. Is multiplexed
c. Is a network
d. Uses virtual circuit routing

25. Which layer in ATM protocol reformats the data received from other networks?
a. Physical
b. ATM
c. Application adaptation
d. Data adaptation

26. Which layer in ATM protocol has a 53-byte cell as an end product?
a. Physical
b. ATM
c. Application adaptation
d. Cell transformation

27. Which AAL type is designed to support a data stream that has a constant bit rate?
a. AAL1
b. AAL2
c. AAL3/4
d. AAL5

28. Which AAL type is designed to support SEAL?
a. AAL1
b. AAL2
c. AAL3/4
d. AAL5

Copyrighted material

29. In an ATM network, all cells belonging to a single message follow the same _____ and remain in their original order until they reach their destination.
    a. Transmission path
    b. Virtual path
    c. Virtual circuit
    d. None of the above
30. A _____ provides a connection or a set of connections between switches.
    a. Transmission path
    b. Virtual path
    c. Virtual circuit
    d. None of the above
31. A _____ is the physical connection between an endpoint and a switch or between two switches.
    a. Transmission path
    b. Virtual path
    c. Virtual circuit
    d. None of the above
32. The VPI of a UNI is _____ bits in length.
    a. 8
    b. 12
    c. 16
    d. 24
33. The VPI of an NNI is _____ bits in length.
    a. 8
    b. 12
    c. 16
    d. 24

Exercises

34. The address field of a Frame Relay frame is 1011000100010110. What is the DLCI (in decimal)?
35. The address field of a Frame Relay frame is 101100000101001. Is this valid?
36. Find the DLCI value if the first 3 bytes received is 7C 74 E1 in hexadecimal.
37. Find the value of the 2-byte address field in hexadecimal if the DLCI is 178. Assume no congestion.
38. In Figure 18.31 a virtual connection is established between A and B. Show the DLCI for each link.
39. In Figure 18.32 a virtual connection is established between A and B. Show the corresponding entries in the tables of each switch.
40. An AAL1 layer receives data at 2 Mbps. How many cells are created per second by the ATM layer?

Copyrighted material

Figure 18.31 *Exercise 38*

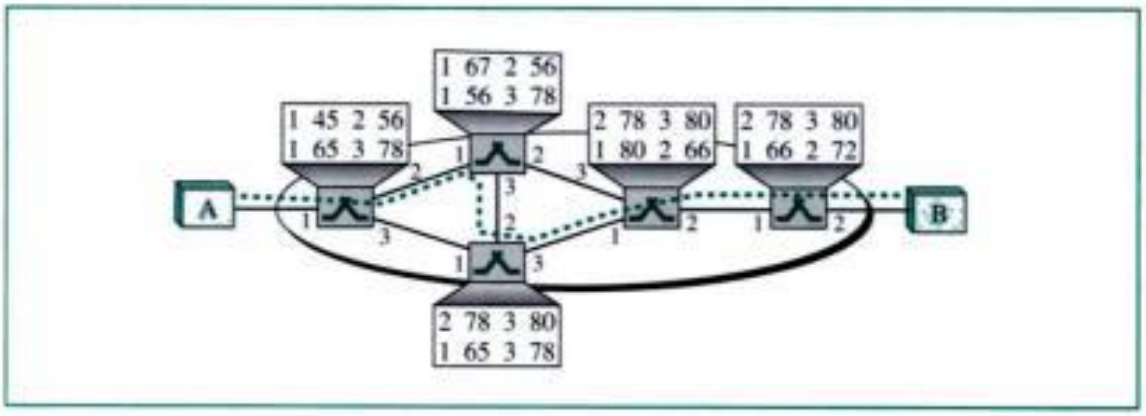

Figure 18.32 *Exercise 39*

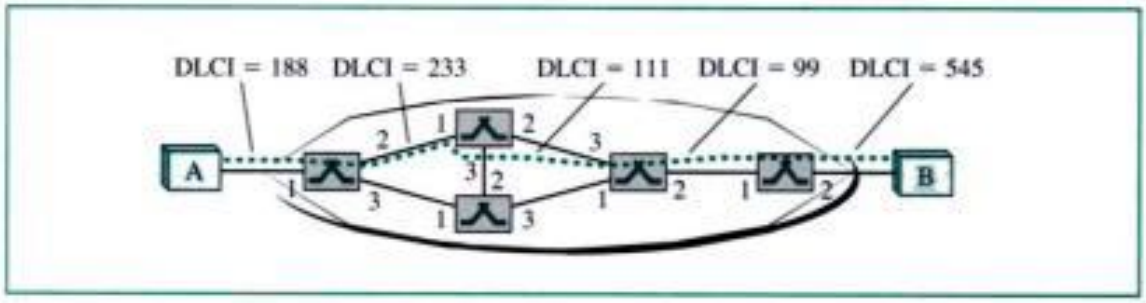

41. What is the total efficiency of ATM using AAL1 (the ratio of received bits to sent bits)?
42. If an application uses AAL3/4 and there are 47,787 bytes of data coming into the CS, how many padding bytes are necessary? How many data units get passed from the SAR to the ATM layer? How many cells are produced?
43. Does the efficiency of ATM using AAL3/4 depend on the size of the packet? Explain your answer.
44. What is the minimum number of cells resulting from an input packet in the AAL3/4 layer? What is the maximum number of cells resulting from an input packet?
45. What is the minimum number of cells resulting from an input packet in the AAL5 layer? What is the maximum number of cells resulting from an input packet?
46. Explain why padding is unnecessary in AAL1, but necessary in other AALs.
47. Using AAL3/4, show the situation where we need _____ of padding.
    a. 0 bytes (no padding)
    b. 40 bytes
    c. 43 bytes
48. Using AAL5, show the situation where we need _____ of padding.
    a. 0 bytes (no padding)
    b. 40 bytes
    c. 47 bytes

Copyrighted material

49. In a 53-byte cell, how many bytes belong to the user in the following (assume no padding)?
    a. AAL1
    b. AAL2
    c. AAL3/4 (not the first or last cell)
    d. AAL5 (not the first or last cell)
50. Complete Table 18.1 by entering the size of the data unit at the SAR sublayer for all AALs.

Table 18.1 *Exercise 50*

Sublayer	*AAL1*	*AAL2*	*AAL3/4*	*AAL5*
SAR				

51. How many virtual connections can be defined in a UNI? How many virtual connections can be defined in an NNI?

Copyrighted material

PART 4

Network Layer

The network layer in the Internet model is responsible for carrying a packet from one computer to another; it is responsible for *host-to-host* delivery. In other words, when we send a packet from San Francisco to Miami, the two network-layer protocols in the two computers cooperate to supervise the delivery of a message.

Figure 1 shows the position of the network layer in the 5-layer Internet model. The network layer is the third layer in the model. It receives services from the data link layer and provides services to the transport layer. The main service it receives from the data link layer is the delivery of data, node-to-node. If there are *N* nodes between the source and destination hosts, there are *N* node-to-node deliveries to achieve a host-to-host delivery at the network layer.

Figure 1 *Position of network layer*

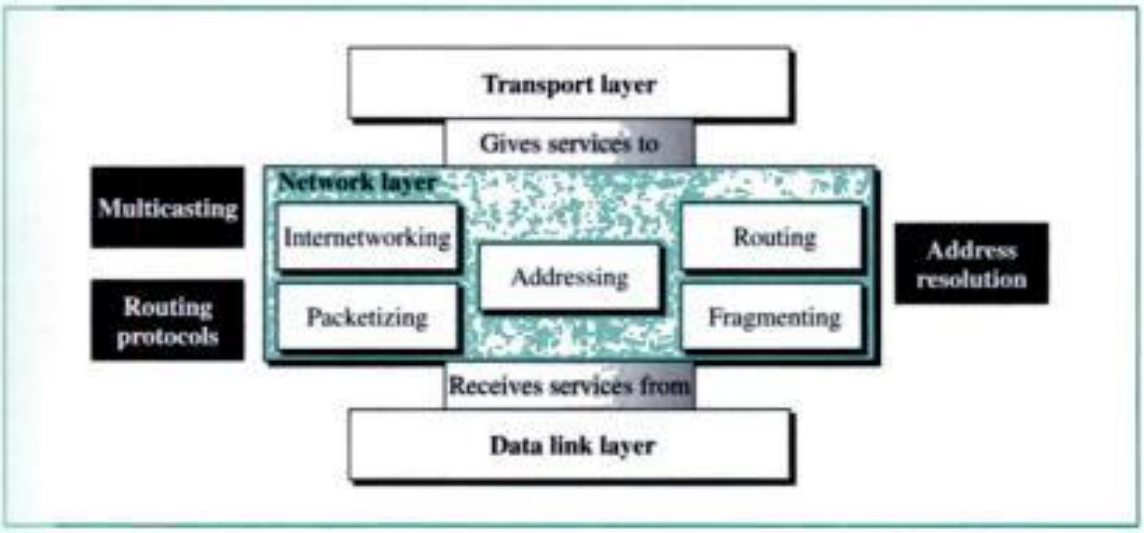

The two hosts are often separated by several physical networks. The data link layer is responsible for carrying data through a physical network; the network layer, or the internetwork layer, as it is sometimes called, is responsible for carrying the packets through the Internet, through several physical networks.

Copyrighted material

Duties

The network layer has a defined set of duties as shown in Figure 2.

Figure 2 *Network layer duties*

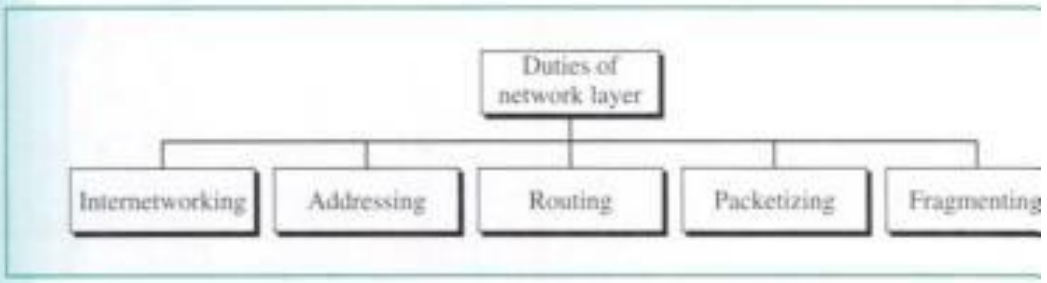

Internetworking

The main duty of the network layer is to provide internetworking, the logical g heterogeneous physical networks together to look like a single network to th transport and application layers.

Addressing

At the network layer, we need to uniquely identify each device on the Internet global communication between all devices. This is analogous to the telephone where each telephone subscriber has a unique telephone number (the country c the area code as part of the identifying scheme must be considered). For exam telephone number 011 86 731 220 8098 uniquely identifies a number in the Changsha in Hunan Province in China.

The addresses used in the network layer must *uniquely* and *universally* de connection of a host (computer) or a router to the Internet. The addresses at the layer must be unique in the sense that each address defines one, and only one, tion to the Internet. Two devices on the Internet can never have the same addres ever, if a device has two connections to the Internet, it has two addresses. We most of Chapter 19 to addressing and all its issues.

Routing

Have you ever been faced with this dilemma? You want to reach a destinat there are several routes from which you can choose. One route is shorter, but the in bad condition. Another route is longer, but safer. One route, which is norma gested during rush hour, connects you to the destination for a fee. Another rou through a mountainous road that may be icy.

Whenever there are multiple routes to a destination, we must make a decis choose one route. Our decision is usually based on some criteria that are impo us. If we have a car that is not so reliable, we might choose the longer road to a danger associated with an icy road. If time is of the essence we might choose th est route. The Internet too is a combination of roads through which the IP packe to reach their destinations. Each IP packet can normally reach its destination via

Copyright© Tata McGraw

Other Supporting Protocols

An internetworking protocol such as IP needs the support of another protocol it achieve host-to-host delivery. This protocol, called the Internet Control M Protocol (ICMP) is discussed in Chapter 20.

Chapters

We have included three chapters in this part of the book. Chapter 19 discu general concept of a network layer; process-to-process communication and Chapter 20 covers the internetworking protocols in the Internet: ARP, IP, ICM IGMP. Chapter 21 is devoted to unicast and multicast routing protocols.

Copyrighted material

Figure 19.3 *Network layer in an internetwork*

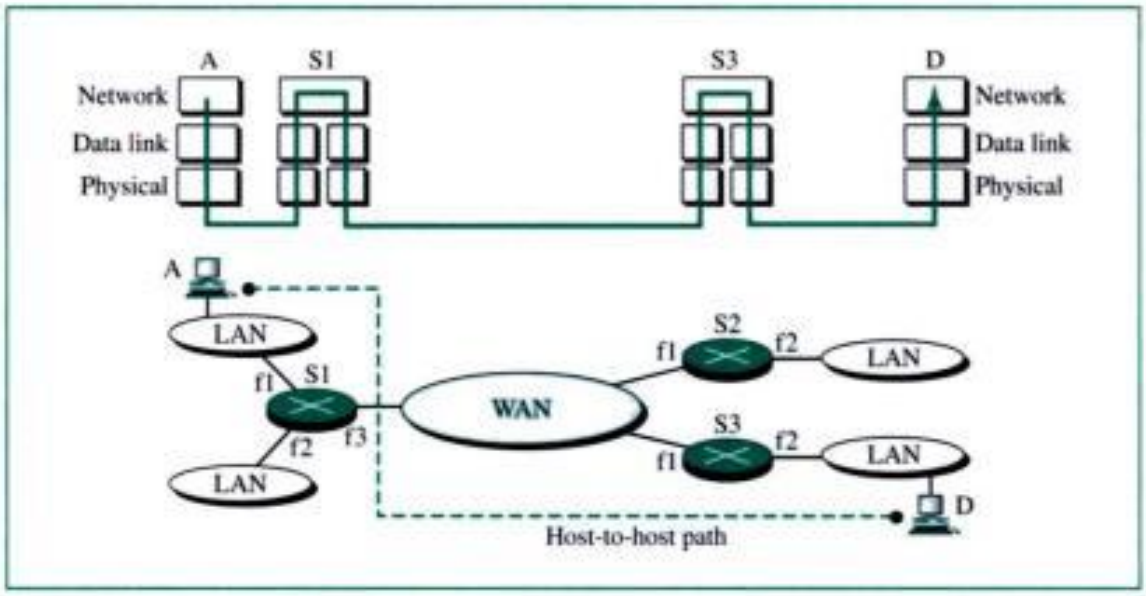

Figure 19.4 *Network layer at the source*

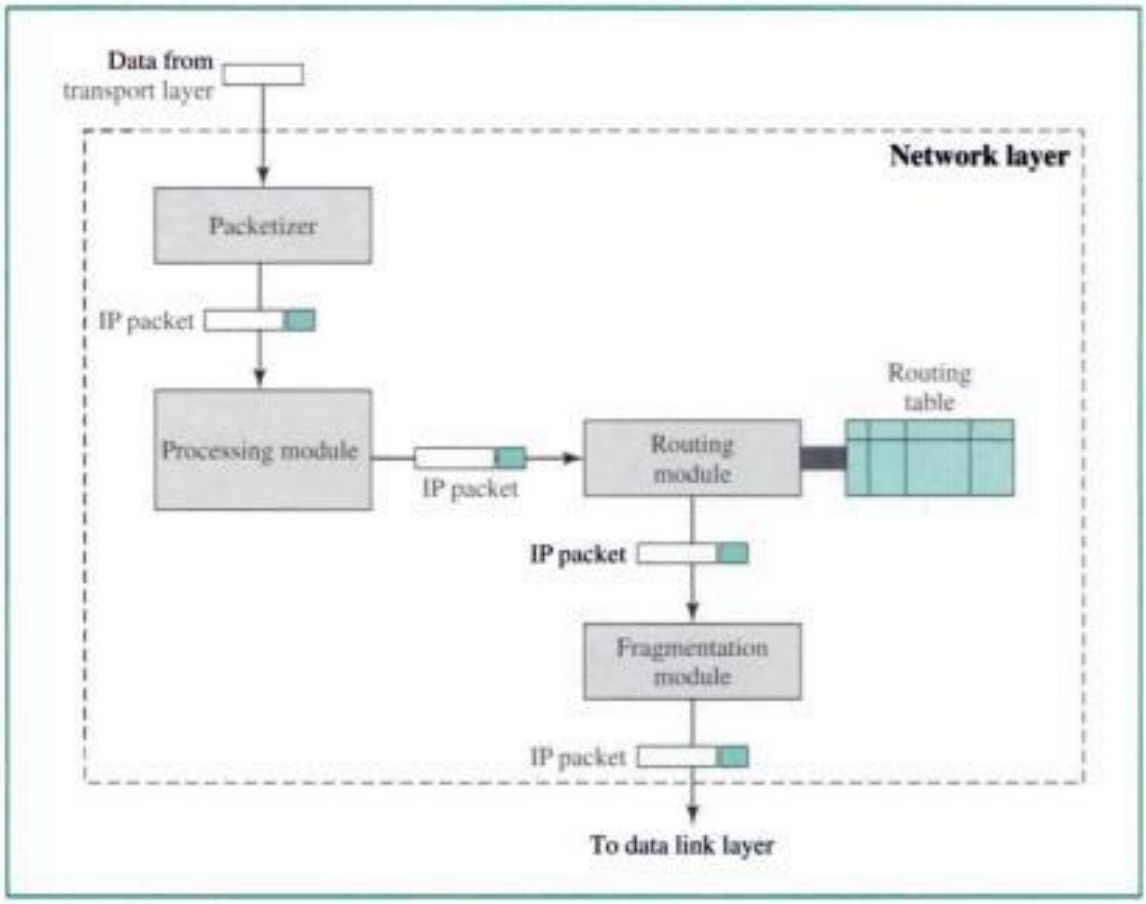

Copyrighted material

Network Layer at Router or Switch

The network layer at the switch or router is responsible for routing the packet. When a packet arrives, the router or switch finds the interface from which the packet must be sent. This is done by using a routing table. In addition, the packet may go through another fragmentation, if necessary. See Figure 19.5.

Figure 19.5 *Network layer at a router*

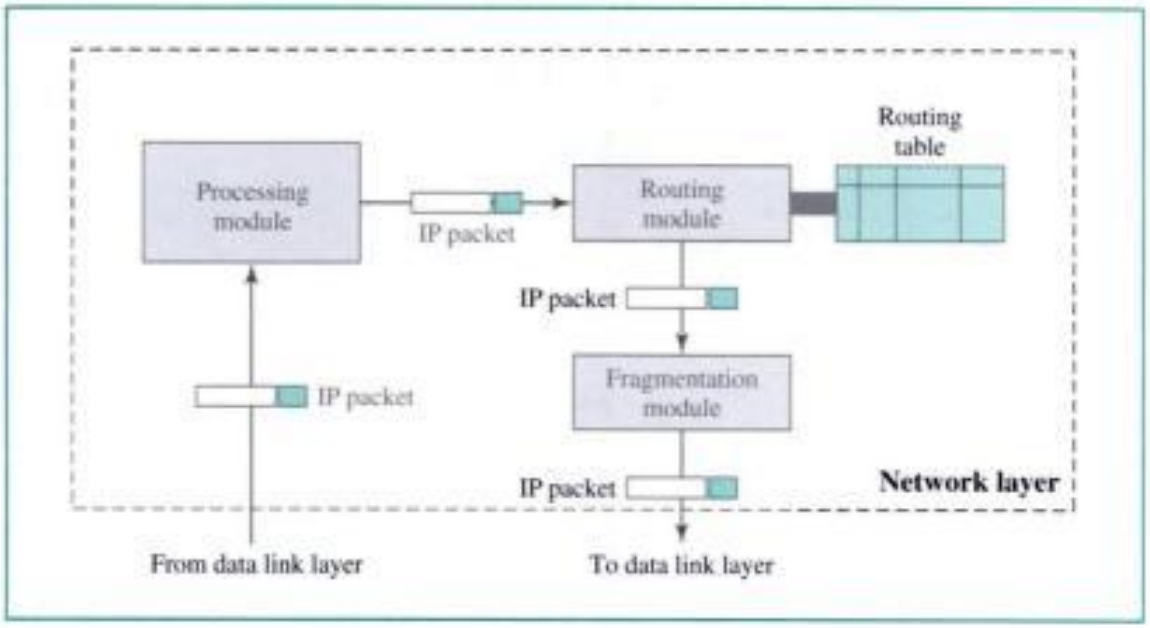

Network Layer at Destination

The network layer at the destination is responsible for address verification; it makes sure that the destination address on the packet is the same as the address of the host. It is also checks to see if the packet has been corrupted during transmission. If it has, the network layer discards the packet. If the packet is a fragment, the network layer waits until all fragments have arrived, and then it reassembles them and delivers the reassembled packet to the transport layer. See Figure 19.6.

Internet as a Packet-Switched Network

The Internet, at the network layer, is a packet-switched network. We discussed switching in Chapters 8 and 18. In general, switching can be divided into two broad categories: circuit switching and packet switching. Packet switching itself uses either the virtual circuit approach or the datagram approach. Figure 19.7 shows the taxonomy.

In circuit switching, a physical link is dedicated between a source and a destination. In this case, data can be sent as a stream of bits without the need for packetizing. In **packet switching,** on the other hand, data are transmitted in discrete units of potentially variable-length blocks called **packets.** The maximum length of the packet is established by the network. Longer transmissions are broken up into multiple packets. Each packet contains not only data but also a header with control information (such as priority codes and source and destination addresses). The packets are sent over the network, node to

Copyrighted material

Figure 19.6 *Network layer at the destination*

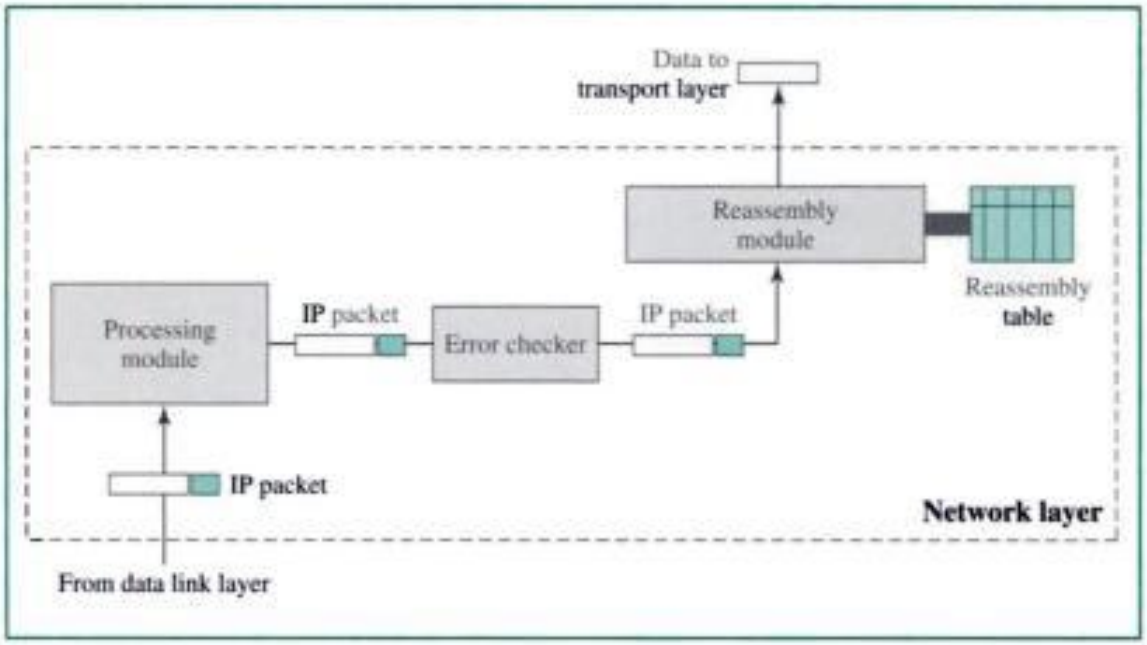

Figure 19.7 *Switching*

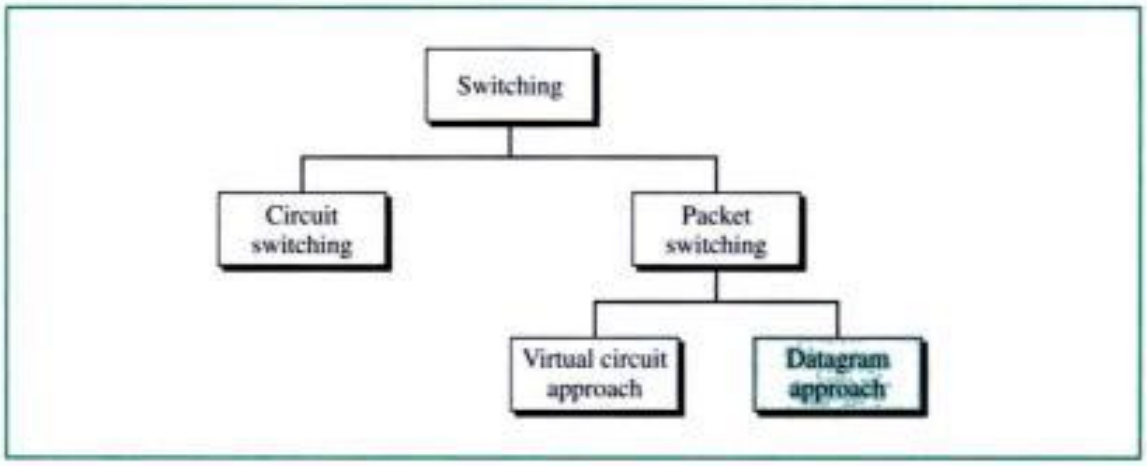

node. At each node, the packet is stored briefly before being routed according to the information in its header. There are two popular approaches to packet switching: the datagram approach and the virtual circuit approach.

Virtual Circuit Approach

In the **virtual circuit approach** to packet switching, the relationship between all packets belonging to a message or session is preserved. A single route is chosen between sender and receiver at the beginning of the session. When the data are sent, all packets of the transmission travel one after another along that route. Wide area networks use the virtual circuit approach to packet switching. As we discussed in Chapter 18, the virtual circuit approach needs a call setup to establish a virtual circuit between the source and destination. A call teardown deletes the virtual circuit. After the setup, routing

Copyrighted material

takes place based on the virtual circuit identifier. This approach is used in WANs, Frame Relay, and ATM and is implemented at the data link layer.

Datagram Approach

In the **datagram approach** to packet switching, each packet is treated independently of all others. Even if one packet is just a piece of a multipacket transmission, the network treats it as though it existed alone. Packets in this approach are referred to as **datagrams.**

Figure 19.8 shows how the datagram approach can be used to deliver four packets from station A to station X. In this example, all four packets (or datagrams) belong to the same message but may go by different paths to reach their destination.

Figure 19.8 *Datagram approach*

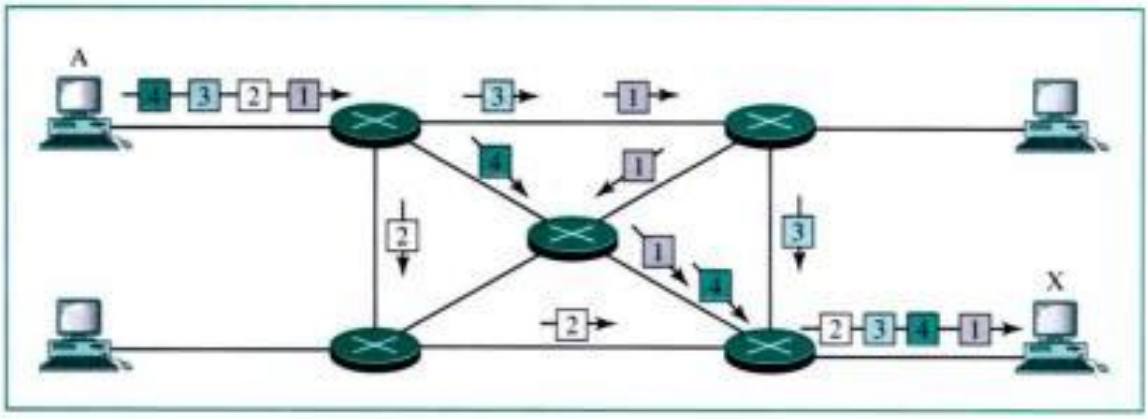

This approach can cause the datagrams of a transmission to arrive at their destination out of order. In most protocols, it is the responsibility of an upper layer to reorder the datagrams before passing them on to the destination port.

The datagram approach has some advantages, too. It does not need call setup and virtual circuit identifiers. The routing and delivery of the packet are based on the source and destination addresses included in the packet itself. The switches or routers each have a routing table that can decide on the route based on these two addresses.

The Internet has chosen the datagram approach to switching in the network layer. It uses the universal addresses defined in the network layer to route packets from the source to the destination.

Switching at the network layer in the Internet is done using the datagram approach to packet switching.

Internet as a Connectionless Network

Delivery of a packet can be accomplished using either a connection-oriented or a connectionless network service. In a **connection-oriented service,** the source first makes a connection with the destination before sending a packet. When the connection is established, a sequence of packets from the same source to the same destination can be sent one after another. In this case, there is a relationship between packets. They are sent on

Copyrighted material

the same path in sequential order. A packet is logically connected to the packet traveling before it and to the packet traveling after it. When all packets of a message have been delivered, the connection is terminated.

In a connection-oriented protocol, the decision about the route of a sequence of packets with the same source and destination addresses can be made only once, when the connection is established. Switches do not recalculate the route for each individual packet. This type of service is used in a virtual circuit approach to packet switching such as in Frame Relay and ATM.

In **connectionless service,** the network layer protocol treats each packet independently, with each packet having no relationship to any other packet. The packets in a message may or may not travel the same path to their destination. This type of service is used in the datagram approach to packet switching. The Internet has chosen this type of service at the network layer.

The reason for this decision is that the Internet is made of so many heterogeneous networks that it is almost impossible to create a connection from the source to the destination without knowing the nature of the networks in advance.

Communication at the network layer in the Internet is connectionless.

19.2 ADDRESSING

From the discussion in Section 19.1, it is obvious that we need addresses and routing mechanisms for delivery at the network layer, from host to host. We discuss addressing in this section and routing in Section 19.3. At the network layer, we need to uniquely identify each device on the Internet to allow global communication between all devices. This is analogous to the telephone system, where each telephone subscriber has a unique telephone number, given that the country code and the area code are part of the identifying scheme.

Internet Address

The identifier used in the network layer of the Internet model to identify each device connected to the Internet is called the **Internet address** or **IP address.** An IP address, in the current version of the protocol, is a 32-bit binary address that *uniquely* and *universally* defines the connection of a host or a router to the Internet.

An IP address is a 32-bit address.

IP addresses are unique. They are unique in the sense that each address defines one, and only one, connection to the Internet. Two devices on the Internet can never have the same address at the same time. However, if a device has two connections to the Internet, via two networks, it has two IP addresses.

The IP addresses are universal in the sense that the addressing system must be accepted by any host that wants to be connected to the Internet.

Copyrighted material

Example 2

Change the following IP addresses from dotted-decimal notation to binary notation.

a. 111.56.45.78

b. 75.45.34.78

Solution

We replace each decimal number with its binary equivalent (see Appendix B):

a. 01101111 00111000 00101101 01001110

b. 01001011 00101101 00100010 01001110

Classful Addressing

IP addresses, when started a few decades ago, used the concept of classes. This architecture is called **classful addressing.** In the mid-1990s, a new architecture, called **classless addressing,** was introduced which will eventually supersede the original architecture. However, most of the Internet is still using classful addressing, and the migration is slow. We first discuss classful addressing.

In classful addressing, the IP address space is divided into five classes: **classes A, B, C, D,** and **E.** Each class occupies some part of the whole **address space.**

In classful addressing, the address space is divided into five classes: A, B, C, D, and E.

We can find the class of an address when the address is given in binary notation or dotted-decimal notation.

Finding the Class in Binary Notation

If the address is given in binary notation, the first few bits can immediately tell us the class of the address, as shown in Figure 19.10.

Figure 19.10 *Finding the class in binary notation*

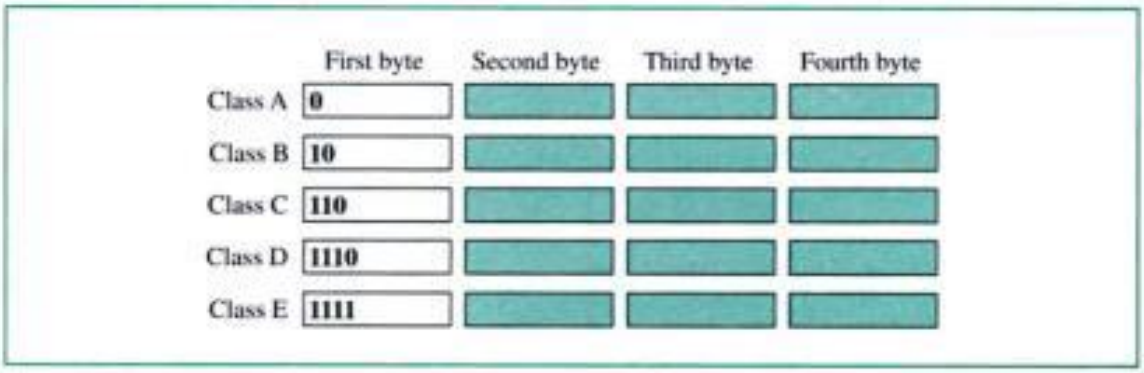

One can follow the procedure shown in Figure 19.11 to systematically check the bits and find the class.

Copyrighted material

Solution

a. The first byte is 227 (between 224 and 239); the class is D.
b. The first byte is 252 (between 240 and 255); the class is E.
c. The first byte is 134 (between 128 and 191); the class is B.

Unicast, Multicast, and Reserved Addresses

Addresses in classes A, B, and C are for unicast communication, from one source to one destination. A host needs to have at least one **unicast address** to be able to send or receive packets.

Addresses in class D are for multicast communication, from one source to a group of destinations. If a host belongs to a group or groups, it may have one or more multicast addresses. A **multicast address** can be used only as a destination address, but never as a source address.

Addresses in class E are reserved. The original idea was to use them for special purposes. They have been used only in a few cases.

Netid and Hostid

In classful addressing, an IP address in classes A, B, and C is divided into **netid** and **hostid.** These parts are of varying lengths, depending on the class of the address. Figure 19.13 shows the netid and hostid bytes. Note that classes D and E are not divided into netid and hostid for reasons that we will discuss later.

Figure 19.13 *Netid and hostid*

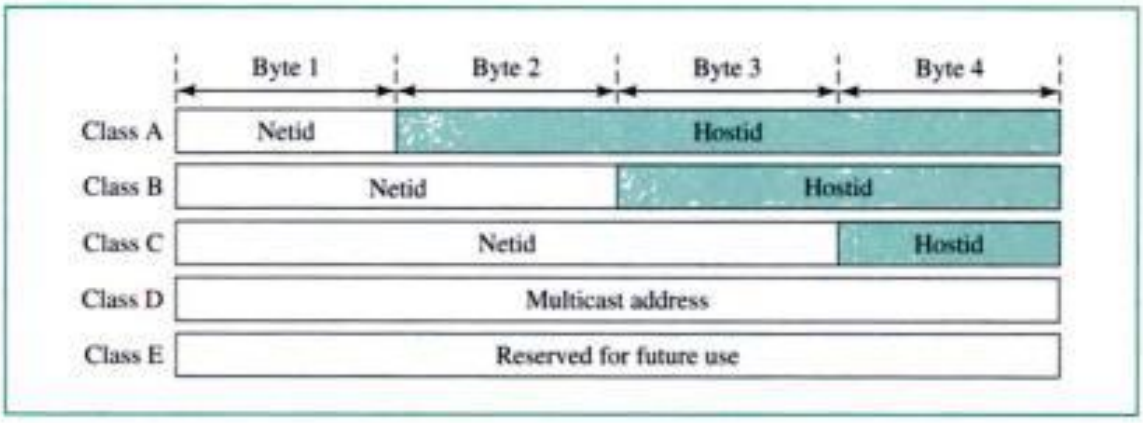

In class A, one byte defines the netid and three bytes define the hostid. In class B, two bytes define the netid and two bytes define the hostid. In class C, three bytes define the netid and one byte defines the hostid.

Classes and Blocks

One problem with classful addressing is that each class is divided into a fixed number of blocks with each block having a fixed size. Let us look at each class.

Class A Class A is divided into 128 blocks with each block having a different netid. The first block covers addresses from **0**.0.0.0 to **0**.255.255.255 (netid **0**). The second

Copyrighted material

block covers addresses from 1.0.0.0 to 1.255.255.255 (netid 1). The last block covers addresses from 127.0.0.0 to 127.255.255.255 (netid 127). Note that for each block of addresses the first byte (netid) is the same, but the other 3 bytes (hostid) can take any value in the given range. Figure 19.14 shows the blocks in class A.

Figure 19.14 *Blocks in class A*

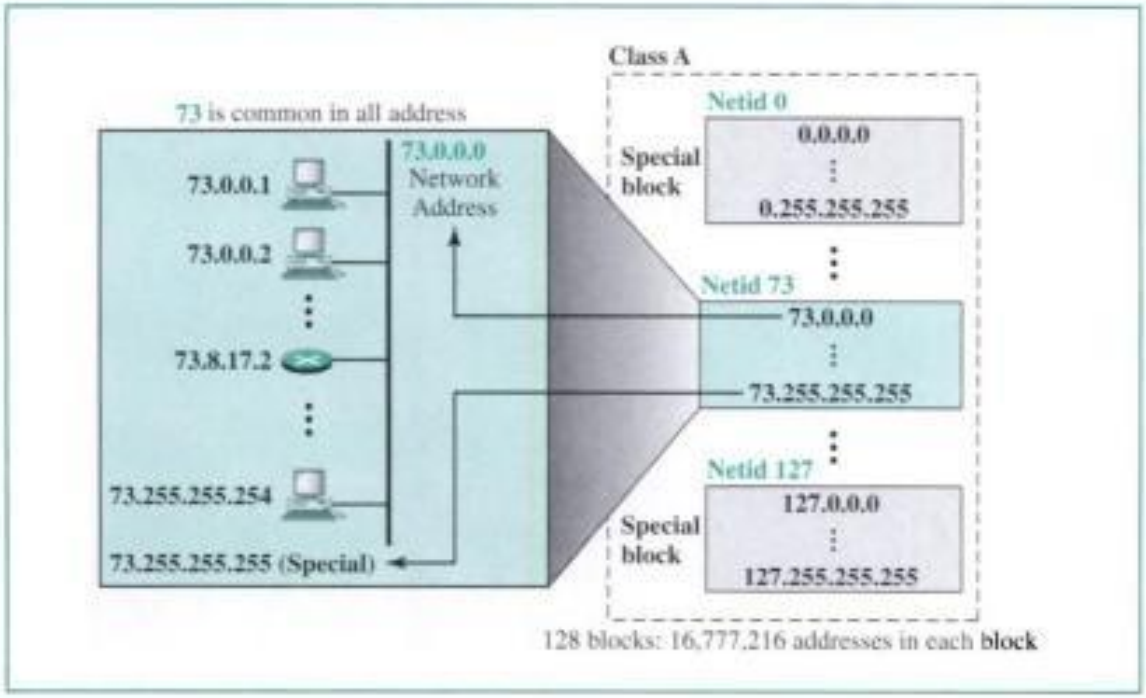

Figure 19.14 also shows how an organization that is granted a block with netid 73 uses its addresses. The first address in the block is used to identify the organization to the rest of the Internet. This address is called the **network address;** it defines the network of the organization, not individual hosts. The organization is not allowed to use the last address; it is reserved for a special purpose, as we will see shortly.

Class A addresses were designed for large organizations with a large number of hosts or routers attached to their network. However, the number of addresses in each block, 16,777,216, is probably larger than the needs of almost all organizations. Many addresses are wasted in this class.

Millions of class A addresses are wasted.

Class B Class B is divided into 16,384 blocks with each block having a different netid. Sixteen blocks are reserved for private addresses, leaving 16,368 blocks for assignment to organizations. The first block covers addresses from 128.0.0.0 to 128.0.255.255 (netid 128.0). The last block covers addresses from 191.255.0.0 to 191.255.255.255 (netid 191.255). Note that for each block of addresses the first 2 bytes (netid) is the same, but the other 2 bytes (hostid) can take any value in the given range.

There are 16,368 blocks that can be assigned. This means that the total number of organizations that can have a class B address is 16,368. However, since each block in

Copyrighted material

Figure 19.15 *Blocks in class B*

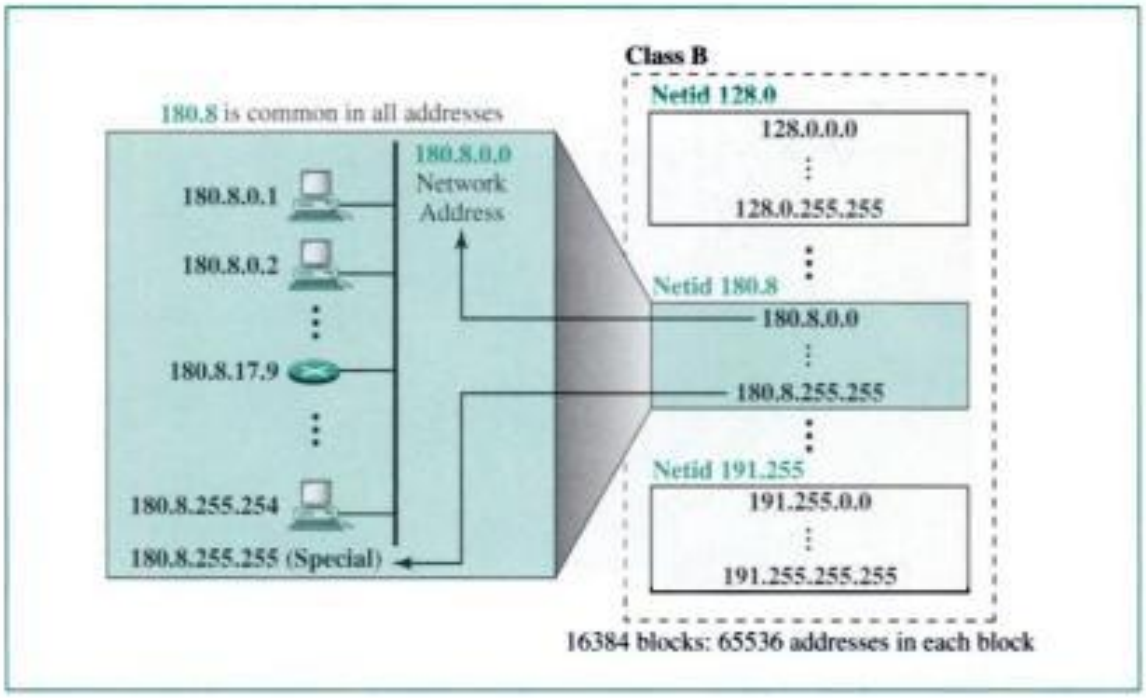

this class contains 65,536 addresses, the organization should be large enough to use all these addresses. Figure 19.15 shows the blocks in class B.

Class B addresses were designed for midsize organizations that may have tens of thousands of hosts or routers attached to their networks. However, the number of addresses in each block, 65,536, is larger than the needs of most midsize organizations. Many addresses are also wasted in this class.

Many class B addresses are wasted.

Class C Class C is divided into 2,097,152 blocks with each block having a different netid. Two hundred fifty-six blocks are used for private addresses, leaving 2,096,896 blocks for assignment to organizations. The first block covers addresses from **192.0.0**.0 to **192.0.0**.255 (netid **192.0.0**). The last block covers addresses from **223.255.255**.0. to **223.255.255**.255 (netid **223.255.255**). Note that for each block of addresses the first 3 bytes (netid) are the same, but the remaining byte (hostid) can take any value in the given range.

There are 2,096,902 blocks that can be assigned. This means that the total number of organizations that can have a class C address is 2,096,902. However, each block in this class contains 256 addresses, which means the organization should be small enough to need less than 256 addresses. Figure 19.16 shows the blocks in class C.

Class C addresses were designed for small organizations with a small number of hosts or routers attached to their networks. The number of addresses in each block is so limited that most organizations do not want a block in this class.

The number of addresses in class C is smaller than the needs of most organizations.

Copyrighted material

Figure 19.16 *Blocks in class C*

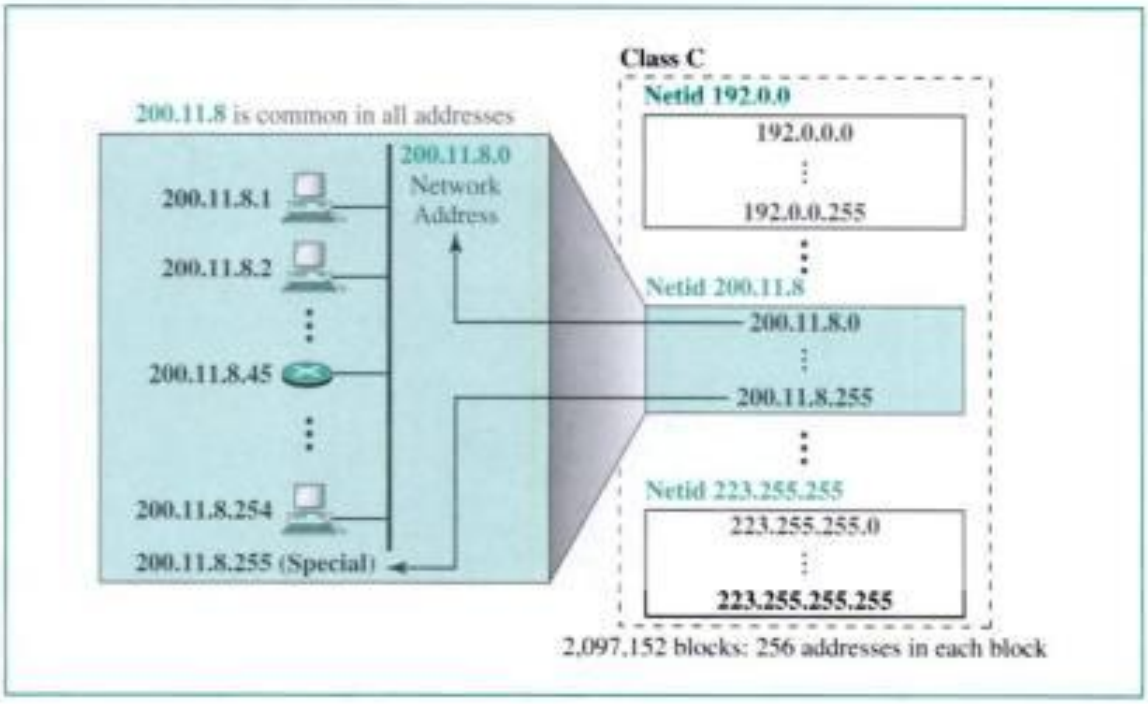

Class D There is just one block of class D addresses. It is designed for multicasting.

Class E There is just one block of class E addresses. It was designed for use as reserved addresses.

Network Address

The network address is an address that defines the network itself; it cannot be assigned to a host. Figure 19.17 shows three examples of network addresses, one for each class.

Figure 19.17 *Network address*

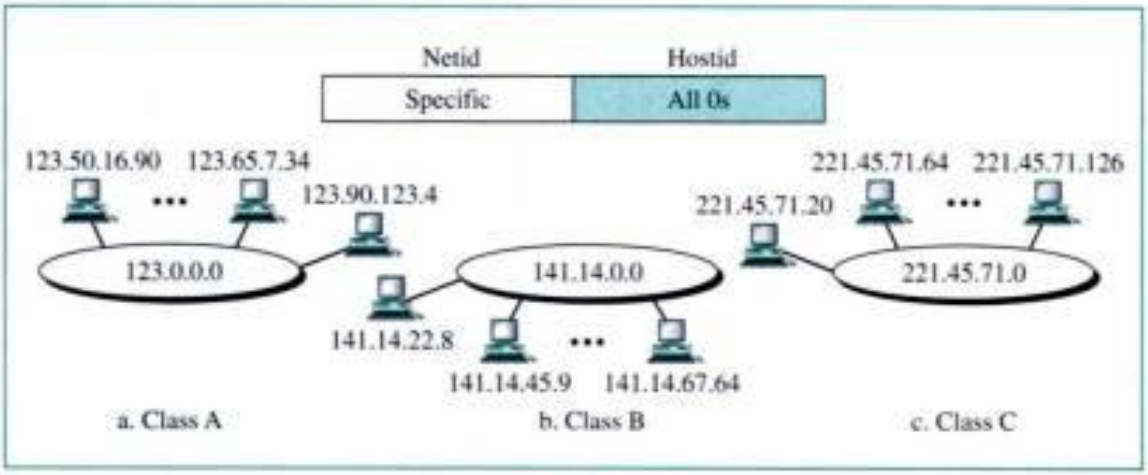

Copyrighted material

Network addresses play a very important role in classful addressing. A network address has several properties:

1. All hostid bytes are 0s.
2. The network address defines the network to the rest of the Internet. Later, we learn that routers can route a packet based on the network address.
3. The network address is the first address in the block.
4. Given the network address, we can find the class of the address.

In classful addressing, the network address is the one that is assigned to the organization.

Example 5

Given the address 23.56.7.91, find the network address.

Solution

The class is A. Only the first byte defines the netid. We can find the network address by replacing the hostid bytes (56.7.91) with 0s. Therefore, the network address is 23.0.0.0.

Example 6

Given the address 132.6.17.85, find the network address.

Solution

The class is B. The first 2 bytes defines the netid. We can find the network address by replacing the hostid bytes (17.85) with 0s. Therefore, the network address is 132.6.0.0.

Example 7

Given the network address 17.0.0.0, find the class.

Solution

The class is A because the netid is only 1 byte.

A network address is different from a netid. A network address has both netid and hostid, with 0s for the hostid.

A Sample Internet with Classful Addresses

Figure 19.18 shows a part of an internet with five networks.

1. A Token Ring LAN with network address 220.3.6.0 (class C).
2. An Ethernet LAN with network address 134.18.0.0 (class B).
3. An Ethernet LAN with network address 124.0.0.0 (class A).
4. A point-to-point WAN (broken line). This network (a T-1 line, for example) just connects two routers; there are no hosts. In this case, to save addresses, no network address is assigned to this type of WAN. A switched WAN (such as Frame Relay or ATM) can be connected to many routers. We have shown three. One router connects the WAN to the Token Ring network. One connects the WAN to one of the Ethernet networks, and one router connects the WAN to the rest of the Internet.

Copyrighted material

Figure 19.18 *Sample internet*

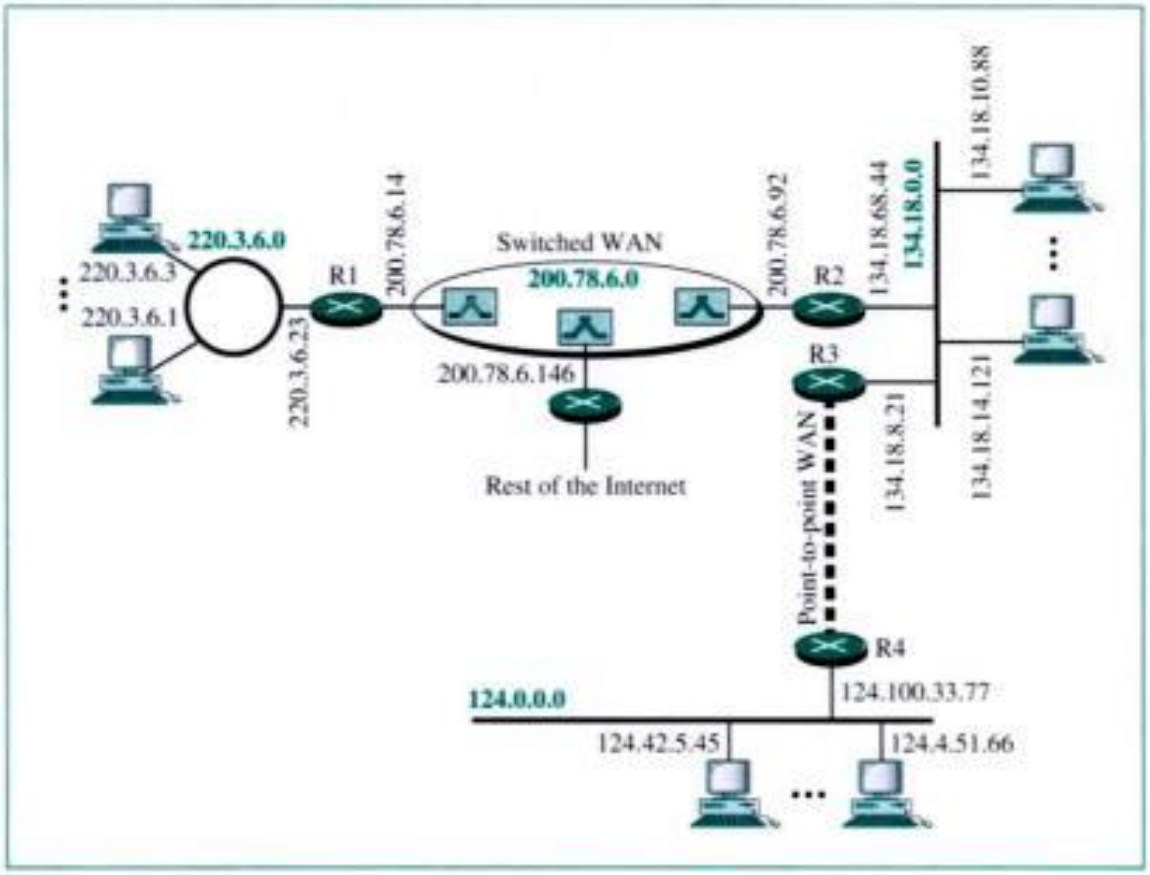

Subnetting

When an organization is given a block of class A, B, or C addresses, the first address in the block defines the network address. This address is used by routers outside the organization, as we see later, to route the packets destined for the network. The outside world, when it comes to routing, recognizes the network, not the individual hosts on the network.

A portion of a 32-bit address indicates the network (netid), and a portion indicates the host (hostid) on the network. This means that there is a sense of hierarchy in IP addressing. To reach a host on the Internet, we must first reach the network by using the first portion of the address (netid). Then we must reach the host itself by using the second portion (hostid). In other words, IP addresses are designed with two levels of hierarchy. Figure 19.19 shows the concept.

IP addresses are designed with two levels of hierarchy.

However, often an organization needs to assemble the hosts into groups; the network needs to be divided into several **subnetworks** (subnets). For example, a university may want to group its hosts according to department. In this case, the university has one network address, but needs several subnetwork addresses. The outside world knows the organization by its network address. Inside the organization each subnetwork is

Copyrighted material

Figure 19.19 *A network with two levels of hierarchy*

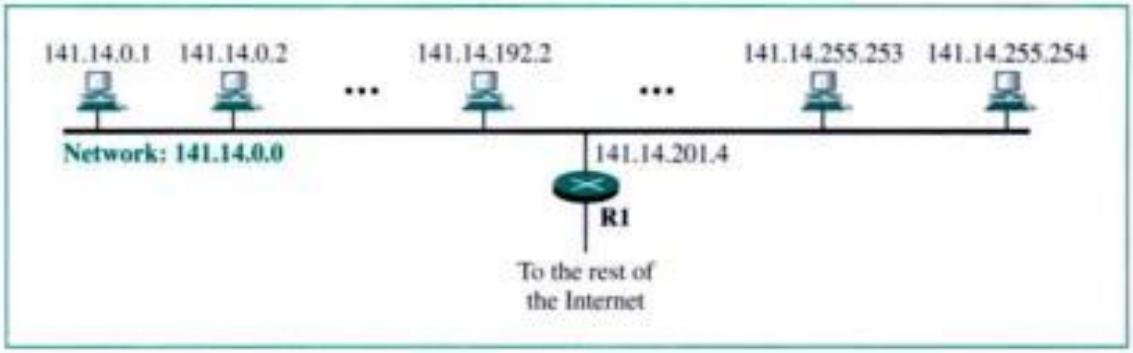

recognized by its subnetwork address. In **subnetting,** a network is divided into several smaller groups with each subnetwork (or subnet) having its own subnetwork address.

When we divide a network into several subnets, we have three levels of hierarchy (see Fig. 19.20). In this figure, the rest of the Internet is not aware that the network is divided into physical subnetworks: The subnetworks still appear as a single network to the rest of the Internet. A packet destined for host 141.14.192.2 still reaches router R1.

Figure 19.20 *A network with three levels of hierarchy (subnetted)*

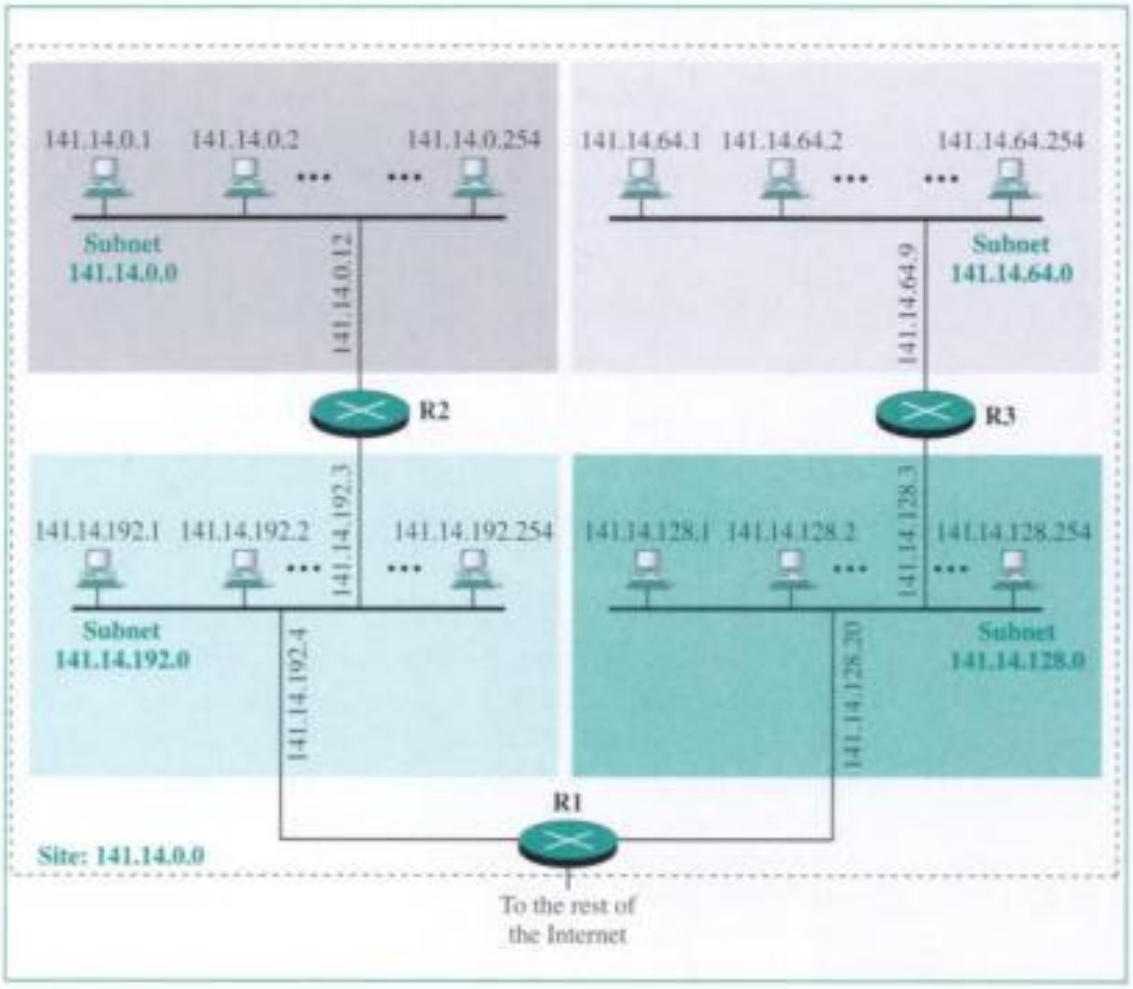

Copyrighted material

a router does not. The router outside the organization has a routing table with one column based on the network addresses; the router inside the organization has a routing table based on the subnetwork addresses. A 32-bit number called the **mask** is the key. The routers outside the organization use a **default mask;** the routers inside the organization use a **subnet mask.**

Default Mask A default mask is a 32-bit binary number that gives the network address when ANDed with an address in the block. For our purpose, it is enough to know that the AND operation does the following:

1. If the bit in the mask is 1, the corresponding bit in the address is retained in the output (no change).
2. If the bit in the mask is 0, a 0 bit in the output is the result.

In other words, the bits in the address corresponding to the 1s in the mask are preserved (remain 0 or 1, as they were), and the bits corresponding to the 0s in the mask change to 0.

Table 19.1 shows the default mask for each class. For class A, the mask is eight 1s and twenty-four 0s. For class B, the mask is sixteen 1s and sixteen 0s. For class C, the mask is twenty-four 1s and eight 0s. The 1s preserve the netid; the 0s set the hostid to 0. Remember that the network address in any class is the netid with the hostid all 0s. An alternative mask notation is a slash followed by the number of 1s. This is called **slash notation.**

Table 19.1 *Default masks*

Class	*In Binary*	*In Dotted-Decimal*	*Using Slash*
A	11111111 00000000 00000000 00000000	255.0.0.0	/8
B	11111111 11111111 00000000 00000000	255.255.0.0	/16
C	11111111 11111111 11111111 00000000	255.255.255.0	/24

Note that the number of 1s in each class matches the number of bits in the netid, and the number of 0s matches the number of bits in the hostid. In other words, when a mask is ANDed with an address, the netid is retained and the hostid is set to 0s.

The network address can be found by applying the default mask to any address in the block (including itself). It retains the netid of the block and sets the hostid to 0s.

Example 8

A router outside the organization receives a packet with destination address 190.240.7.91. Show how it finds the network address to route the packet.

Solution

The router follows three steps:

a. The router looks at the first byte of the address to find the class. It is class B.
b. The default mask for class B is 255.255.0.0. The router ANDs this mask with the address to get 190.240.0.0.
c. The router looks in its routing table to find out how to route the packet to this destination. Later, we will see what happens if this destination does not exist.

Copyrighted material

Classless Addressing

The idea of classful addressing has created many problems. Until the mid-1990s, a range of addresses meant a block of addresses in class A, B, or C. The minimum number of addresses granted to an organization was 256 (class C); the maximum was 16,777,216 (class A). In between these limits an organization could have a class B block or several class C blocks. However, the choices were limited. In addition, what about a small business that needed only 16 addresses? Or a household that needed only two addresses?

During the 1990s, Internet Service Providers (ISPs) came into prominence. An ISP is an organization that provides Internet access for individuals, small businesses, and mid-size organizations that do not want to create an Internet site and become involved in providing Internet services (such as email services) for their employees. An ISP can provide these services. An ISP can be granted several class B or class C blocks and then subdivide the range of addresses (in groups of 2, 4, 8, or 16 addresses), giving a range to a household or a small business. The customers are connected via a dial-up modem, DSL, or cable modem to the ISP. However, each customer still needs an IP address (we will discuss other solutions such as address translation later).

In 1996, the Internet authorities announced a new architecture called **classless addressing** that will eventually render classful addressing obsolete.

Variable-Length Blocks

The whole idea of classless addressing is to have variable-length blocks that belong to no class. We can have a block of 2 addresses, 4 addresses, 128 addresses, and so on. There are some restrictions that we will discuss shortly, but in general a block can range from very small to very large. In this architecture, the whole address space (2^{32} addresses) is divided into blocks of different sizes. An organization will be granted a block suitable for its purposes. There is only one condition on the number of addresses in a block; it must be a power of 2 (2, 4, 8, . . .). A household may be given a block of 2 addresses. A small business may be given 16 addresses. A large organization may be given 1024 addresses. The beginning address must be evenly divisible by the number of addresses. For example, if a block contains 4 addresses, the beginning address, as a 32-bit integer, must be divisible by 4.

Mask

If you remember, when an organization was given a block in classful addressing, the organization was given the beginning address of the block and a mask (default mask). In subnetting, when an organization was assigned a subblock, it was given the first address and the subnet mask. The same concept is carried over to classless addressing. When an organization is given a block, it is given the first address and the mask. These two pieces of information can define the whole block. The mask is normally given in slash notation, as we discussed before.

Finding the Network Address

Can we find the network address (the first address in the block) if one of the addresses is in the block and the mask is given? The answer is definitely yes. When we have the mask, we can AND the mask and the address to find the first address.

Copyrighted material

Subnetting

We can, of course, use subnetting with classless addressing. When an organization is granted a block of addresses, it can create subnets to meet its needs. The network administrator can design a subnet mask just as we discussed in classful addressing. The procedure is even simpler here. The number of 1s in the mask (n) increases to define the subnet mask. For example, if the mask is /17, the subnet mask can be /20 to create eight subnets ($2^3 = 8$).

CIDR

The idea behind classless addressing is **Classless InterDomain Routing (CIDR).** Although classless addressing alleviates the depletion of addresses, we now need classless routing or CIDR instead of classful routing. We discuss this issue in Section 19.3.

Dynamic Address Configuration

Each computer that is attached to the Internet must have the following information:

- Its IP address.
- Its subnet mask.
- The IP address of a router.
- The IP address of a name server.

This information is usually stored in a configuration file and accessed by the computer during the bootstrap (boot) process. But what about a diskless workstation or a computer with a disk that is booted for the first time, or a computer that has moved from one subnet to another? **Dynamic Host Configuration Protocol (DHCP)** is a protocol designed to provide the information dynamically (based on demand). DHCP is also used to assign addresses to a host dynamically. When a computer in an organization needs an address, it can use DHCP.

DHCP is a client-server program, which we will discuss in Chapter 24. Basically, DHCP server has two databases. The first database statically binds physical addresses to IP addresses. The second database makes DHCP dynamic. When a DHCP client requests a temporary IP address, the DHCP server goes to the pool of available (unused) IP addresses and assigns an IP address for a negotiable period of time.

When a DHCP client sends a request to a DHCP server, the server first checks its static database. If an entry with the requested physical address exists in the static database, the permanent IP address of the client is returned. On the other hand, if the entry does not exist in the static database, the server selects an IP address from the available pool, assigns the address to the client, and adds the entry to the dynamic database.

Leasing

The addresses assigned from the pool are temporary addresses. The DHCP server issues a lease for a specific period of time. When the lease expires, the client must either stop using the IP address or renew the lease. The server can choose to agree or disagree to the renewal. If the server disagrees, the client stops using the address.

Copyrighted material

each pair of addresses defines a connection. However, there are still some drawbacks. No more than four connections can be made to the same destination. No private-network host can access two external server programs (e.g., HTTP and FTP) at the same time.

Using Both IP Addresses and Port Numbers To allow a many-to-many relationship between private-network hosts and external server programs, we need more information in the translation table. For example, suppose two hosts inside a private network with addresses 172.18.3.1 and 172.18.3.2 need to access the HTTP server on external host 25.8.3.2. If the translation table has five columns, instead of two, that include the source and destination port numbers of the transport layer protocol, the ambiguity is eliminated. We discuss port numbers in Chapter 22. Table 19.3 shows an example of such a table.

Table 19.3 *Five-column translation table*

Private Address	*Private Port*	*External Address*	*External Port*	*Transport Protocol*
172.18.3.1	1400	25.8.3.2	80	TCP
172.18.3.2	1401	25.8.3.2	80	TCP
...	...	...	...	...

Note that when the response from HTTP comes back, the combination of source address (25.8.3.2) and destination port number (1400) defines the private network host to which the response should be directed. Note also that for this translation to work, the temporary port numbers (1400 and 1401) must be unique.

19.3 ROUTING

As we discussed in Section 19.2, we need addresses and routing to handle delivery of packets. We discussed addressing; we now focus on routing.

Routing Techniques

Routing requires a host or a router to have a **routing table.** When a host has a packet to send or when a router has received a packet to be forwarded, it looks at this table to find the route to the final destination. However, this simple solution is impossible today in an internetwork such as the Internet because the number of entries in the routing table makes table lookups inefficient. Several techniques can make the size of the routing table manageable and handle issues such as security. We will discuss these methods here.

Next-Hop Routing

One technique to reduce the contents of a routing table is called **next-hop routing.** In this technique, the routing table holds only the information that leads to the next hop instead of holding information about the complete route. The entries of a routing

Copyrighted material

table must be consistent with each other. Figure 19.28 shows how routing tables can be simplified by using this technique.

Figure 19.28 *Next-hop routing*

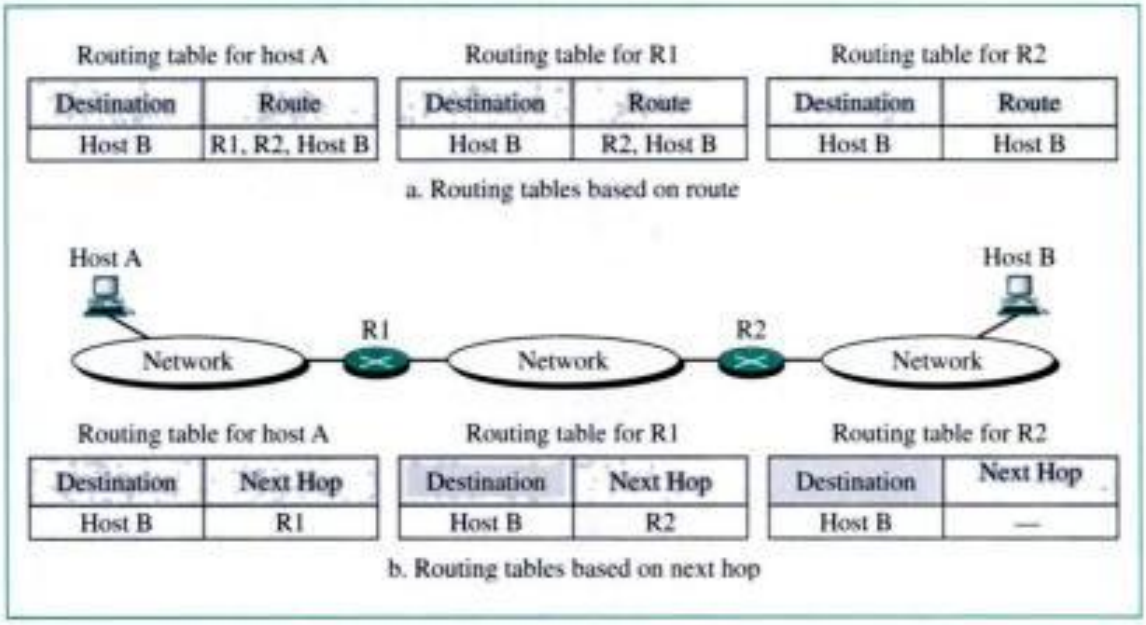

Network-Specific Routing

A second technique to reduce the routing table and simplify the searching process is called **network-specific routing.** Here, instead of having an entry for every host connected to the same physical network, we have only one entry to define the address of the network itself. In other words, we treat all hosts connected to the same network as one single entity. For example, if 1000 hosts are attached to the same network, only one entry exists in the routing table instead of 1000. Figure 19.29 shows the concept.

Figure 19.29 *Network-specific routing*

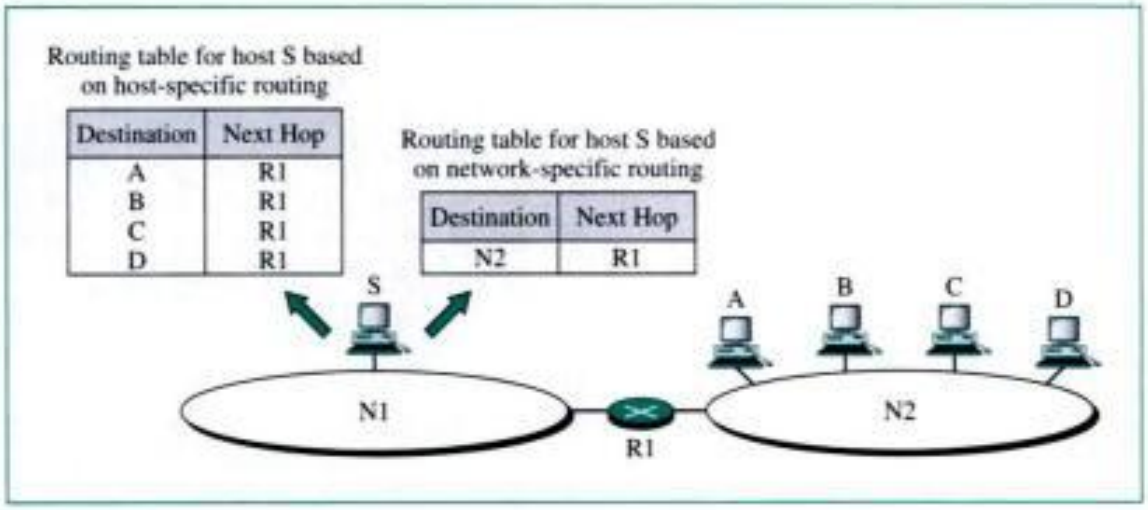

Copyrighted material

Figure 19.31 *Default routing*

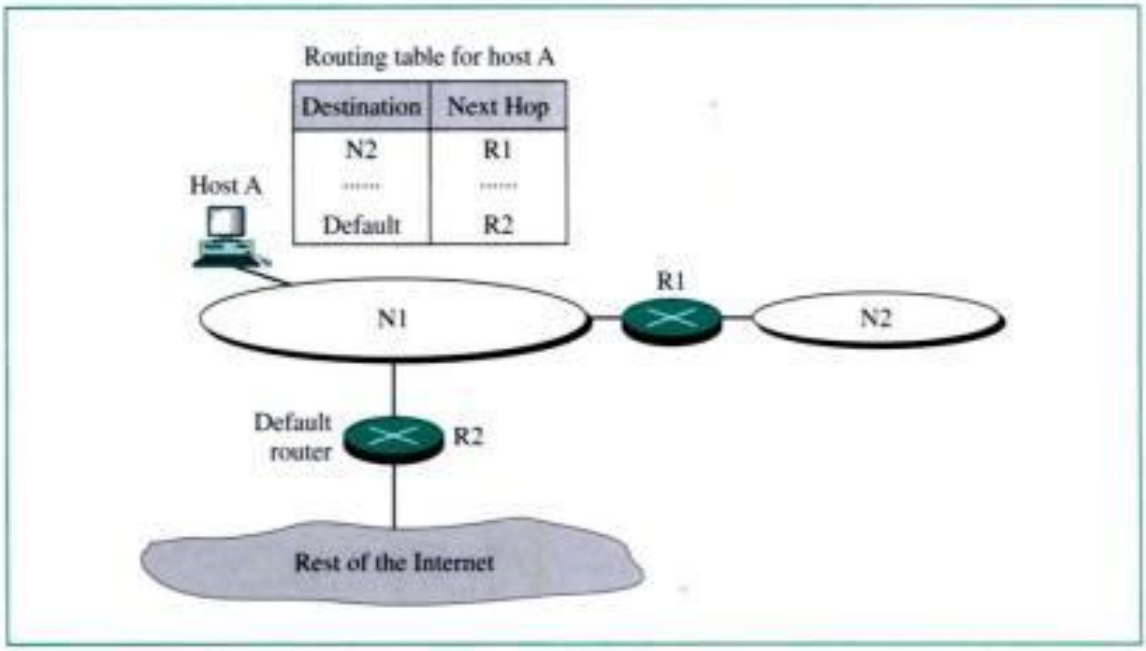

Static Routing Table

A **static routing table** contains information entered manually. The administrator enters the route for each destination into the table. When this type of table is created, it cannot update automatically when there is a change in the Internet. The table must be manually altered by the administrator.

A static routing table can be used in a small internet that does not change very often, or in an experimental internet for troubleshooting. It is not good strategy to use a static routing table in a big internet such as the Internet.

Dynamic Routing Table

A **dynamic routing table** is updated periodically using one of the dynamic routing protocols such as RIP, OSPF, or BGP (see Chapter 21). Whenever there is a change in the Internet, such as a shutdown of a router or breaking of a link, the dynamic routing protocols update all the tables in the routers (and eventually in the host).

The routers in a big internet such as the Internet need to be updated dynamically for efficient delivery of the IP packets. We will discuss in detail three dynamic routing protocols in Chapter 21.

Routing Table for Classful Addressing

In classful addressing, with or without subnetting, a routing table needs a minimum of four columns (it normally has more): mask, destination network address, next-hop address, and interface, as shown in Figure 19.32.

When a packet arrives, the router applies the mask to the **destination address** to find the corresponding destination network address. If found, the packet is sent out from the corresponding interface in the table. If the destination network address is not

Copyrighted material

Figure 19.32 *Classful addressing routing table*

	Mask	Destination address	Next-hop address	Interface
	/8	14.0.0.0	118.45.23.8	m1
Host-specific →	/32	192.16.7.1	202.45.9.3	m0
	/24	193.14.5.0	84.78.4.12	m2
Default →	/0	/0	145.11.10.6	m0

found, the packet is delivered to the default interface which carries the packet to the default router.

Example 10

Using the table in Figure 19.32, the router receives a packet for destination 192.16.7.1. For each row, the mask is applied to the destination address until a match with the destination address is found. In this example, the router sends the packet through interface m0 (host specific).

Example 11

Using the table in Figure 19.32, the router receives a packet for destination 193.14.5.22. For each row, the mask is applied to the destination address until a match with the next-hop address is found. In this example, the router sends the packet through interface m2 (network specific).

Example 12

Using the table in Figure 19.32, the router receives a packet for destination 200.34.12.34. For each row, the mask is applied to the destination address, but no match is found. In this example, the router sends the packet through the default interface m0.

Routing Table for Classless Addressing: CIDR

So far, the discussion on routing tables concentrated on classful addressing. Now we need to consider classless addressing and Classless InterDomain Routing (CIDR). The shift to classless addressing requires changes to the routing table organization and routing algorithms.

Routing Table Size

When we use classful addressing, there is only one entry in the routing table for each site outside the organization. The entry defines the site even if that site is subnetted. When a packet arrives at the router, the router checks the corresponding entry and forwards the packet accordingly.

When we use classless addressing, the number of entries in the router's table can either decrease or increase. It can decrease if the block of addresses assigned to an organization is larger than the block in classful addressing. For example, instead of having four entries for an organization that creates a supernet from four class C blocks, we can have one entry in classless routing.

Copyrighted material

It is more likely, however, that the number of routing table entries will increase. This is so because the intent of classless addressing is to divide up the blocks of class A and class B addresses. For example, instead of assigning over 16 million addresses to just one organization, the addresses can be portioned out to many organizations. The problem is that whereas there was just one routing table entry for a block in a class A address, now there are many entries in classless addressing. For example, if a class B block (over 64,000 addresses) is divided up between 60 organizations, there are now 60 routing table entries where before there was just one.

Hierarchical Routing

To solve the problem of gigantic routing tables, we create a sense of hierarchy in the Internet architecture and create **hierarchical routing** tables. In Chapter 1, we mentioned that the Internet today has a sense of hierarchy. We said that the Internet is divided into international and national ISPs. National ISPs are divided into regional ISPs, and regional ISPs are divided into local ISPs. If the routing table has a sense of hierarchy like the Internet architecture, the routing table can decrease in size.

Let us take the case of a local ISP. A local ISP can be assigned a single, but large block of addresses with a certain mask. The local ISP can divide this block into smaller blocks of different sizes and can assign these to individual users and organizations, both large and small. If the block assigned to the local ISP is A.B.C.D/*n*, the ISP can create blocks of E.F.G.H/*m*, where *m* may vary for each customer and is greater than *n*.

How does this reduce the size of the routing table? The rest of the Internet does not have to be aware of this division. All customers of the local ISP are defined as A.B.C.D/*n* to the rest of the Internet. Every packet destined for one of the addresses in this large block is routed to the local ISP. There is only one entry in every router in the world for all these customers. They all belong to the same group. Of course, inside the local ISP, the router must recognize the subblocks and route the packet to the destined customer. If one of the customers is a large organization, it also can create another level of hierarchy by subnetting and dividing its subblock into smaller subblocks (or sub-subblocks). In classless routing, the levels of hierarchy are unlimited as long as we follow the rules of classless addressing.

Geographic Routing

To decrease the size of the routing table even further, we need to extend hierarchical routing to include **geographic routing.** We must divide the entire address space into a few large blocks. We assign a block to North America, a block to Europe, a block to Asia, a block to Africa, and so on. The routers of ISPs outside of Europe will have only one entry for packets to Europe in their routing tables. The routers of ISPs outside of North America will have only one entry for packets to North America in their routing tables. And so on. Part of this idea has already been implemented for class C addressing. But, for real efficiency, all of classes A and B need to be recycled and reassigned.

Routing Table Search Algorithms

In classless addressing, searching is definitely more complex. We need to change the **search algorithms** to make the CIDR as efficient as possible. Many new algorithms have been proposed, but their discussions are beyond the scope of this book.

Copyrighted material

24. Identify the class of IP address 229.1.2.3.
    a. Class A
    b. Class B
    c. Class C
    d. Class D
25. Identify the class of IP address 191.1.2.3.
    a. Class A
    b. Class B
    c. Class C
    d. Class D
26. A subnet mask in class A can have _____ 1s with the remaining bits 0s.
    a. Nine
    b. Four
    c. Thirty-three
    d. Three
27. A subnet mask in class B can have _____ 1s with the remaining bits 0s.
    a. Nine
    b. Fourteen
    c. Seventeen
    d. Three
28. A subnet mask in class C can have _____ 1s with the remaining bits 0s.
    a. Ten
    b. Twenty-five
    c. Twelve
    d. Seven
29. A subnet mask in class A has fourteen 1s. How many subnets does it define?
    a. 32
    b. 8
    c. 64
    d. 128
30. A subnet mask in class B has nineteen 1s. How many subnets does it define?
    a. 8
    b. 32
    c. 64
    d. 128
31. A subnet mask in class C has twenty-five 1s. How many subnets does it define?
    a. 2
    b. 8
    c. 16
    d. 0

Copyrighted material

32. Given the IP address 201.14.78.65 and the subnet mask 255.255.255.224, what is the subnet address?
    a. 201.14.78.32
    b. 201.14.78.65
    c. 201.14.78.64
    d. 201.14.78.12
33. Given the IP address 180.25.21.172 and the subnet mask 255.255.192.0, what is the subnet address?
    a. 180.25.21.0
    b. 180.25.0.0
    c. 180.25.8.0
    d. 180.0.0.0
34. Given the IP address 18.250.31.14 and the subnet mask 255.240.0.0, what is the subnet address?
    a. 18.0.0.14
    b. 18.31.0.14
    c. 18.240.0.0
    d. 18.9.0.14
35. Class _____ has the greatest number of hosts per given network address.
    a. A
    b. B
    c. C
    d. D
36. _____ is a client-server program that provides an IP address, subnet mask, IP address of a router, and IP address of a name server to a computer.
    a. NAT
    b. CIDR
    c. ISP
    d. DHCP
37. On a network that uses NAT, the _____ has a translation table.
    a. Switch
    b. Router
    c. Server
    d. None of the above
38. On a network that uses NAT, _____ initiates the communication.
    a. An external host
    b. An internal host
    c. The router
    d. (a) or (b)

Copyrighted material

52. In a class A subnet, we know the IP address of one of the hosts and the mask as given below:

IP address:	25.34.12.56
Mask:	255.255.0.0

What is the first address (network address)?

53. In a class B subnet, we know the IP address of one of the hosts and the mask as given below:

IP address:	125.134.112.66
Mask:	255.255.224.0

What is the first address (network address)?

54. In a class C subnet, we know the IP address of one of the hosts and the mask as given below:

IP address:	182.44.82.16
Mask:	255.255.255.192

What is the first address (network address)?

55. Find the masks that create the following number of subnets in class A.
    a. 2
    b. 6
    c. 30
    d. 62
    e. 122
    f. 250
56. Find the masks that create the following number of subnets in class B.
    a. 2
    b. 5
    c. 30
    d. 62
    e. 120
    f. 250
57. What is the maximum number of subnets in class A using the following masks?
    a. 255.255.192.0
    b. 255.192.0.0
    c. 255.255.224.0
    d. 255.255.255.0
58. What is the maximum number of subnets in class B using the following masks?
    a. 255.255.192.0
    b. 255.255.0.0
    c. 255.255.224.0
    d. 255.255.255.0

Copyrighted material

CHAPTER 20

Network Layer Protocols: ARP, IPv4, ICMP, IPv6, and ICMPv6

In the Internet model, or the TCP/IP suite, there are five network layer protocols: ARP, RARP, IP, ICMP, and IGMP, as shown in Figure 20.1.

Figure 20.1 *Protocols at network layer*

The main protocol in this layer is IP, which is responsible for host-to-host delivery of datagrams from a source to a destination. However, IP needs the services of other protocols.

IP needs a protocol called ARP to find the MAC (physical) address of the next hop. This address must be passed to the data link layer, with the IP datagram, to be inserted into the encapsulating frame.

During datagram delivery, IP needs the services of ICMP to handle unusual situations such as the occurrence of an error.

IP is designed for unicast delivery, one source to one destination. Multimedia and other new applications in the Internet need multicasting delivery, one source to many destinations. For multicasting, IP uses the services of another protocol called IGMP.

In this chapter, we discuss only ARP, IP, and ICMP. RARP is becoming obsolete. IGMP is discussed in Chapter 21 when we talk about multicasting.

The current version of IP is called IPv4. The new version, which may or may not become dominant, is IPv6. At the end of this chapter, we give a glance at this new protocol and the rationale for its existence.

Copyrighted material

20.1 ARP

The Internet is made of a combination of physical networks connected by devices such as routers. A packet starting from a source host may pass through several different physical networks before finally reaching the destination host.

The hosts and routers are recognized at the network level by their IP addresses. An **IP address** is an internetwork address. Its jurisdiction is universal. An IP address is universally unique. Every protocol that deals with interconnecting networks requires IP addresses.

However, packets pass through physical networks to reach these hosts and routers. At the physical network, the hosts and routers are recognized by their MAC addresses. A MAC address is a local address. Its jurisdiction is a local network. It should be unique locally, but not necessarily universally.

The MAC address and the IP address are two different identifiers. We need both of them because a physical network, such as Ethernet, can have two different protocols at the network layer, such as IP and IPX (Novell), at the same time. Likewise, a packet at a network layer such as IP may pass through different physical networks, such as Ethernet and Token Ring.

This means that delivery of a packet to a host or a router requires two levels of addressing: IP and MAC. We need to be able to map an IP address to its corresponding MAC address.

Mapping

We can have two types of address mapping: static and dynamic.

Static Mapping

Static mapping means creating a table that associates an IP address with a MAC address. This table is stored in each machine on the network. Each machine that knows, for example, the IP address of another machine but not its MAC address can look it up in the table. This has some limitations because MAC addresses may change in the following ways:

1. A machine could change its network card, resulting in a new MAC address.
2. In some LANs, such as LocalTalk (Apple), the MAC address changes every time the computer is turned on.
3. A mobile computer can move from one physical network to another, resulting in a change in its MAC address.

To implement these changes, a static mapping table must be updated periodically. This overhead could affect the network performance.

Dynamic Mapping

In **dynamic mapping** each time a machine knows one of the two addresses, it can use a protocol to find the other one.

Two protocols have been designed to perform dynamic mapping: **Address Resolution Protocol (ARP)** and **Reverse Address Resolution Protocol (RARP).** The

Copyrighted material

first maps an IP address to a MAC address; the second maps a MAC address to an IP address. However, we discuss only ARP because RARP has been replaced by DHCP (see Chapter 19); it is becoming obsolete.

ARP associates an IP address with its MAC address. On a typical physical network, such as a LAN, each device on a link is identified by a physical or station address that is usually imprinted on the NIC (network interface card).

Anytime a host, or a router, needs to find the MAC address of another host or router on its network, it sends an ARP query packet. The packet includes the physical and IP addresses of the sender and the IP address of the receiver. Because the sender does not know the physical address of the receiver, the query is broadcast over the network (see Fig. 20.2).

Figure 20.2 *ARP operation*

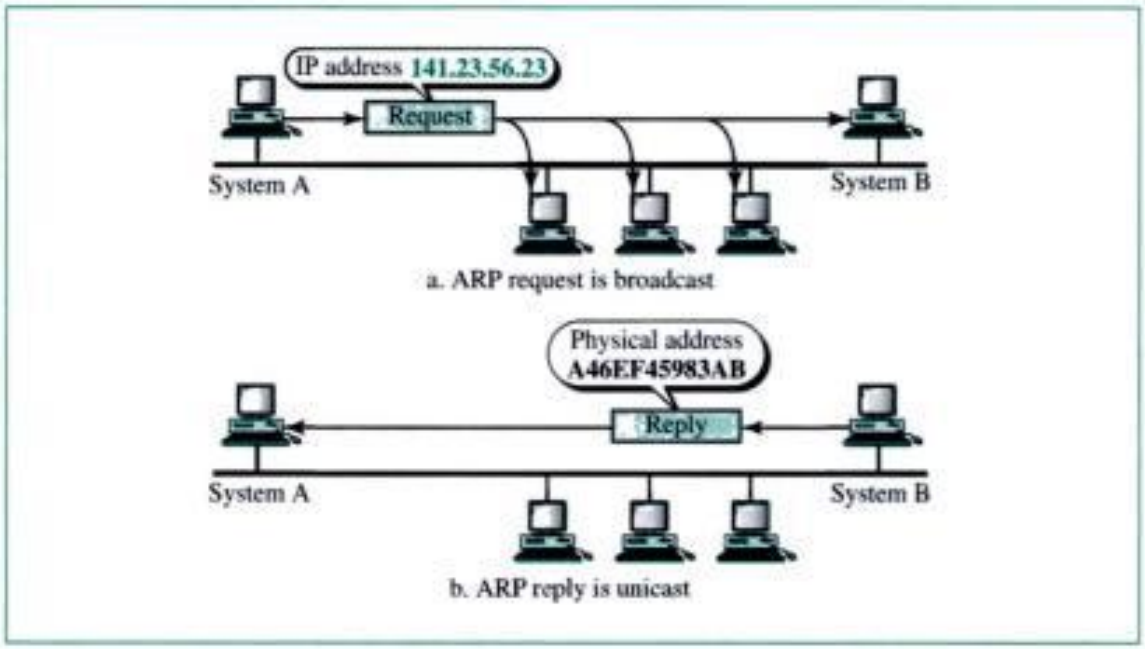

Every host or router on the network receives and processes the ARP query packet, but only the intended recipient recognizes its IP address and sends back an ARP response packet. The response packet contains the recipient's IP and physical addresses. The packet is unicast directly to the inquirer using the physical address received in the query packet.

In Figure 20.2*a*, the system on the left (A) has a packet that needs to be delivered to another system (B) with IP address 141.23.56.23. System A needs to pass the packet to its data link layer for the actual delivery, but it does not know the physical address of the recipient. It uses the services of ARP to send a broadcast request packet to ask for the physical address of a system with an IP address of 141.23.56.23.

This packet is received by every system on the physical network, but only system B will answer it, as shown in Figure 20.2*b*. System B sends an ARP reply packet that includes its physical address. Now system A can send all the packets it has for this destination, using the physical address it received.

Copyrighted material

Packet Format

Figure 20.3 shows the format of an ARP packet.

Figure 20.3 *ARP packet*

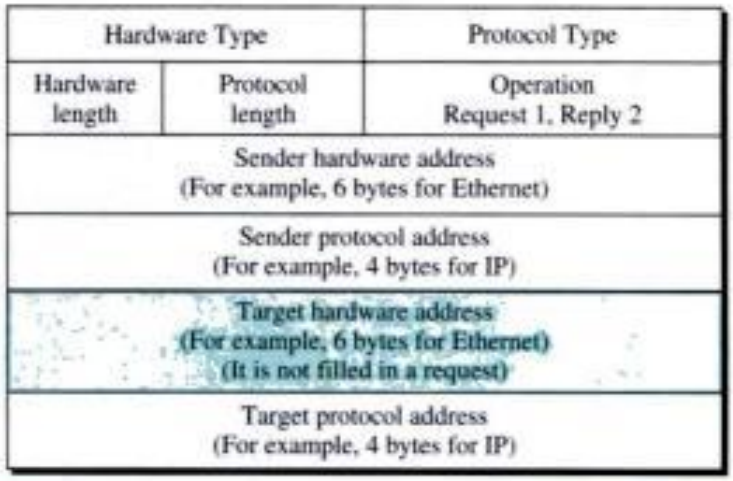

The fields are as follows:

- **HTYPE (hardware type).** This is a 16-bit field defining the type of network on which ARP is running. Each LAN has been assigned an integer based on its type. For example, Ethernet is given type 1. ARP can be used on any physical network.
- **PTYPE (protocol type).** This is a 16-bit field defining the protocol using ARP. For example, the value of this field for the IPv4 protocol is 0800_{16}. ARP can be used with any higher-level protocol.
- **HLEN (hardware length).** This is an 8-bit field defining the length of the physical address in bytes. For example, for Ethernet the value is 6.
- **PLEN (protocol length).** This is an 8-bit field defining the length of the IP address in bytes. For example, for the IPv4 protocol the value is 4.
- **OPER (operation).** This is a 16-bit field defining the type of packet. Two packet types are defined: ARP request (1) and ARP reply (2).
- **SHA (sender hardware address).** This is a variable-length field defining the physical address of the sender. For example, for Ethernet this field is 6 bytes long.
- **SPA (sender protocol address).** This is a variable-length field defining the logical (for example, IP) address of the sender. For the IP protocol, this field is 4 bytes long.
- **THA (target hardware address).** This is a variable-length field defining the physical address of the target. For example, for Ethernet this field is 6 bytes long. For an ARP request message, this field is all 0s because the sender does not know the physical address of the target.
- **TPA (target protocol address).** This is a variable-length field defining the logical (for example, IP) address of the target. For the IPv4 protocol, this field is 4 bytes long.

Copyrighted material

Encapsulation

An ARP packet is **encapsulated** directly into a data link frame. For example, in Figure 20.4 an ARP packet is encapsulated in an Ethernet frame. Note that the type field indicates that the data carried by the frame are an ARP packet.

Figure 20.4 *Encapsulation of ARP packet*

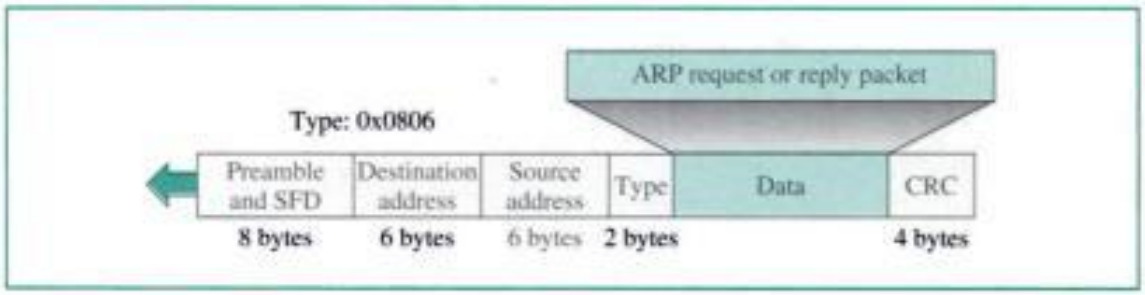

Operation

Let us see how ARP functions on the Internet. First we describe the steps involved. Then we discuss the four cases in which a host or router needs to use ARP.

Steps Involved

These are the steps involved in the delivery of the datagram:

1. The sender knows the IP address of the target. We will see how the sender obtains this shortly.
2. IP asks ARP to create an ARP request message, filling in the sender physical address, the sender IP address, and the target IP address. The target physical address field is filled with 0s.
3. The message is passed to the data link layer where it is encapsulated in a frame, using the physical address of the sender as the source address and the physical broadcast address as the destination address.
4. Every host or router receives the frame. Because the frame contains a broadcast destination address, all stations remove the message and pass it to ARP. All machines except the one targeted drop the packet. The target machine recognizes the IP address.
5. The target machine replies with an ARP reply message that contains its physical address. The message is unicast.
6. The sender receives the reply message. It now knows the physical address of the target machine.
7. The IP datagram, which carries data for the target machine, is now encapsulated in a frame and is unicast to the destination.

Four Different Cases

The following are four different cases in which the services of ARP can be used (see Fig. 20.5).

Copyrighted material

Solution

Figure 20.6 shows the ARP request and reply packets. Note that the ARP data field in this case is 28 bytes, and that the individual addresses do not fit in the 4-byte boundary. That is why we do not show the regular 4-byte boundaries for these addresses. Note that we use hexadecimal for every field except the IP addresses.

Figure 20.6 *Example 1*

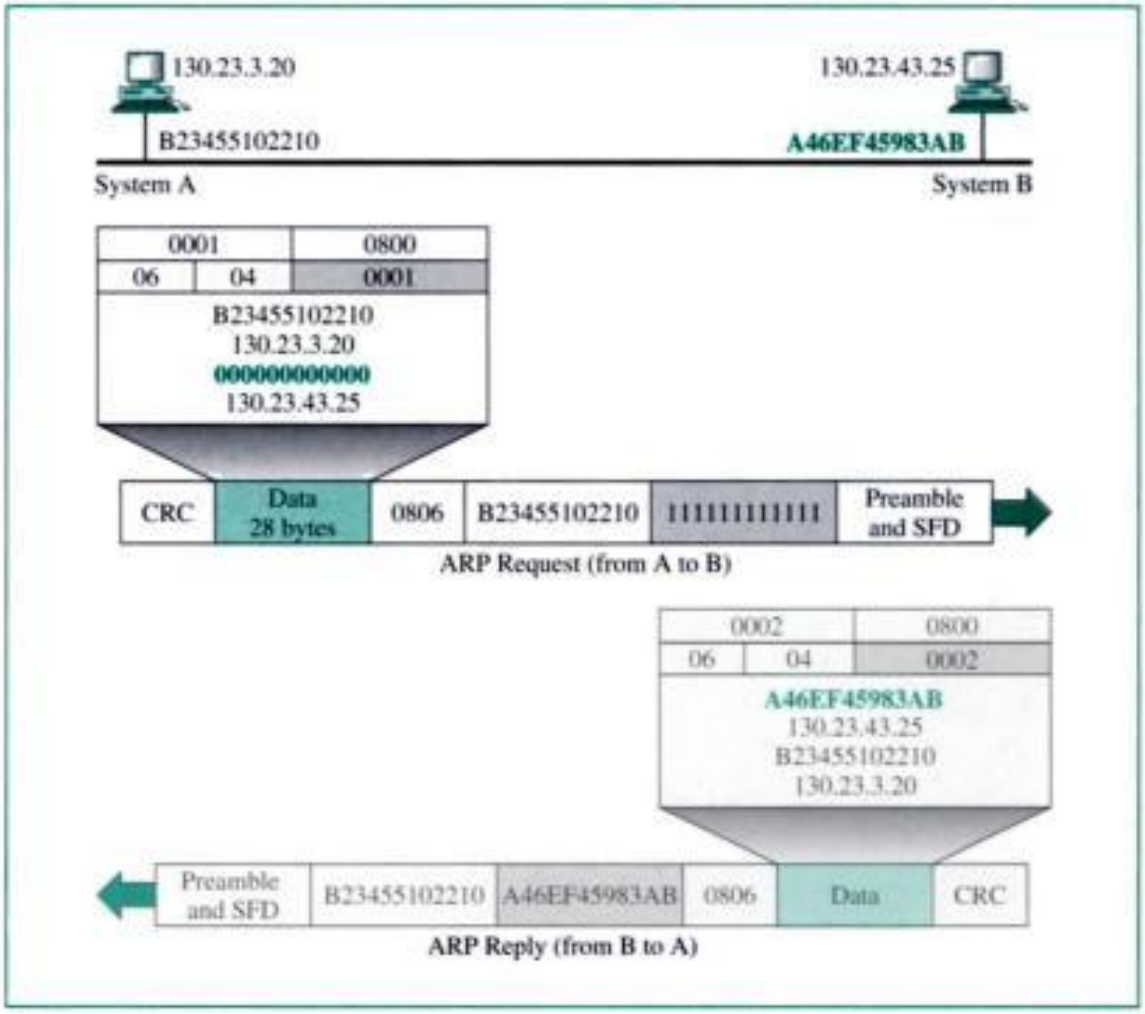

20.2 IP

The **Internet Protocol (IP)** is the host-to-host network layer delivery protocol for the Internet. IP is an unreliable and connectionless datagram protocol—a **best-effort delivery** service. The term *best-effort* means that IP provides no error control or flow control. IP uses only an error detection mechanism and discards the packet if it is corrupted. IP does its best to deliver a packet to its destination, but with no guarantees.

If reliability is important, IP must be paired with a reliable protocol such as TCP (at the transport layer). An example of a more commonly understood best-effort

Copyrighted material

delivery service is the post office. The post office does its best to deliver the mail but might not always succeed. If an unregistered letter is lost, it is up to the sender or would-be recipient to discover the loss and rectify the problem. The post office itself does not keep track of every letter and cannot notify a sender of loss or damage.

IP is also a connectionless protocol for a packet-switching network which uses the datagram approach (see Chapter 19). This means that each datagram is handled independently, and each datagram can follow a different route to the destination. This implies that datagrams sent by the same source to the same destination could arrive out of order. Also, some could be lost or corrupted during transition. Again, IP relies on a higher-level protocol to take care of all these problems.

Datagram

Packets in the IP layer are called **datagrams.** Figure 20.7 shows the IP datagram format. A datagram is a variable-length packet consisting of two parts: header and data. The **header** is 20 to 60 bytes in length and contains information essential to routing and delivery. It is customary in the Internet to show the header in 4-byte sections. A brief description of each field is in order.

Figure 20.7 *IP datagram*

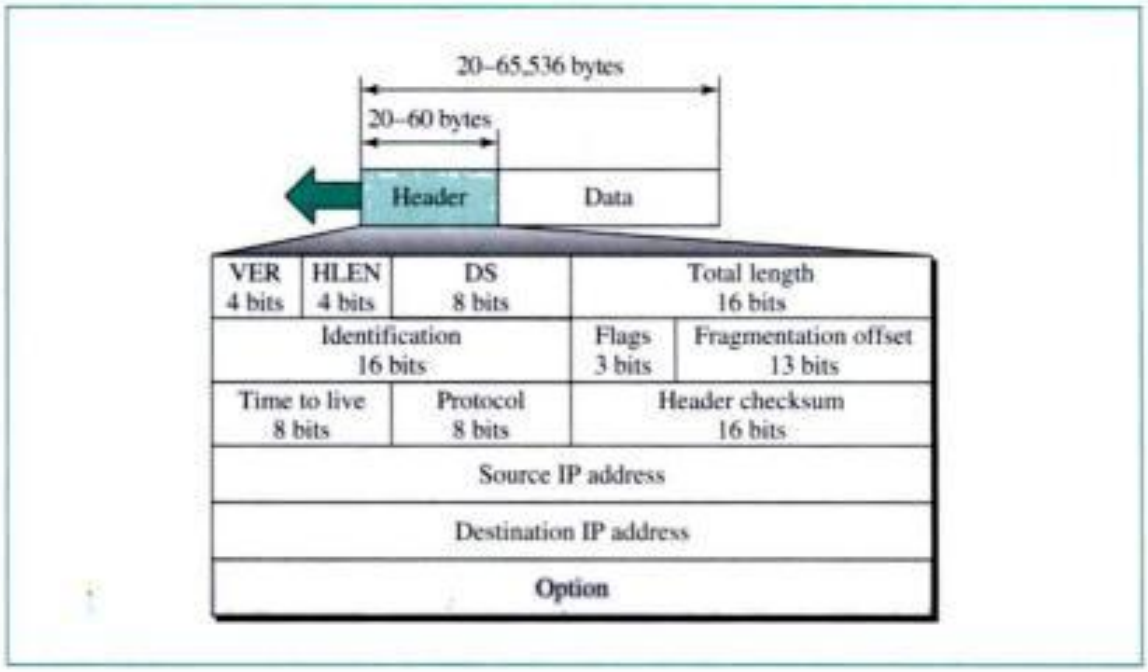

- **Version (VER).** This field defines the version of the IP. Currently the version is 4 (IPv4). However, version 6 (or IPv6) might totally replace version 4 in the near future.
- **Header length (HLEN).** Because of the option field, the length of the header is variable. This field defines the length of the datagram header in 4-byte words. Its value must be multiplied by 4 to give the length in bytes.

Copyrighted material

Table 20.1 *Protocols*

Value	*Protocol*
1	ICMP
2	IGMP
6	TCP
17	UDP
89	OSPF

- **Checksum.** The checksum in the IP packet covers only the header, not the data. There are two good reasons for this. First, all higher-level protocols that encapsulate data in the IP datagram have a checksum field that covers the whole packet. Therefore, the checksum for the IP datagram does not have to check the encapsulated data. Second, the header of the IP packet changes with each visited router, but the data do not. So the checksum includes only the part that has changed. If the data are included, each router must recalculate the checksum for the whole packet, which means increased processing time for each router. Figure 20.9 shows an example of a checksum calculation for an IP header without options. The header is divided into 16-bit sections. The value of the checksum field is set to zero. All the sections are added and the sum is complemented. The result is inserted in the checksum field.

Figure 20.9 *Example of checksum calculation*

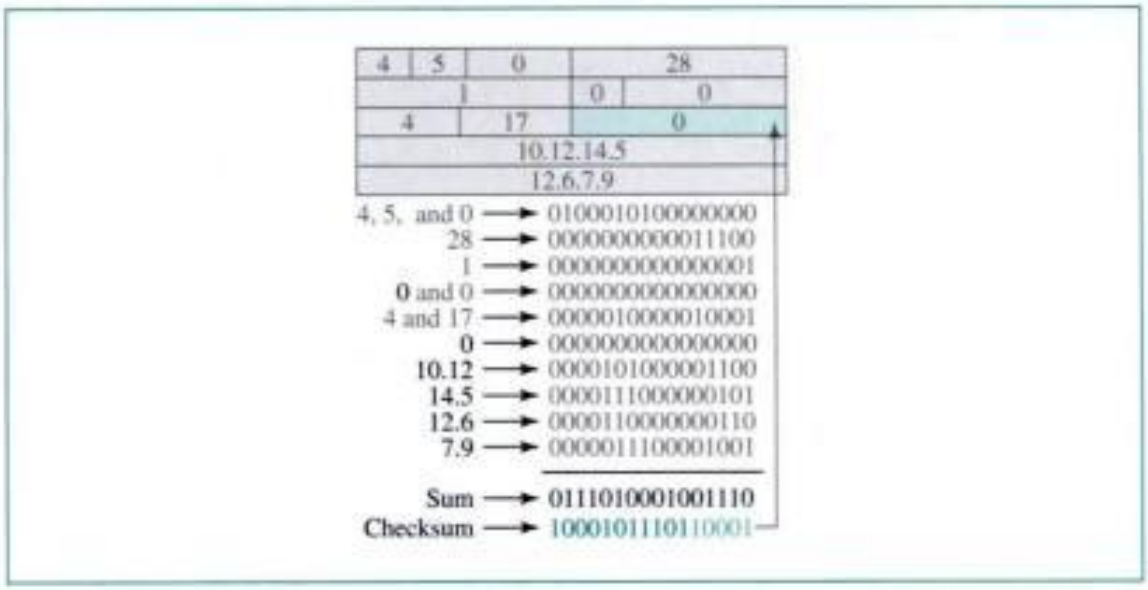

- **Source address.** This field defines the IP address of the source. This field must remain unchanged during the time the IP datagram travels from the source host to the destination host.
- **Destination address.** This field defines the IP address of the destination. This field must remain unchanged during the time the IP datagram travels from the source host to the destination host.

Copyrighted material

- **Options.** Options, as the name implies, are not required for every datagram. They are used for network testing and debugging. Although options are not a required part of the IP header, option processing is required of the IP software. This means that all standards must be able to handle options if they are present in the header. There are several types of options, but we do not discuss them here. For more information see Forouzan, *TCP/IP Protocols Suite*, 2d ed., McGraw-Hill, 2002.

Fragmentation

A datagram can travel through different networks. Each router decapsulates the IP datagram from the frame it receives, processes it, and then encapsulates it in another frame. The format and size of the received frame depend on the protocol used by the physical network through which the frame has just traveled. The format and size of the sent frame depend on the protocol used by the physical network through which the frame is going to travel. For example, if a router connects an Ethernet network to an ATM network, it receives a frame in the Ethernet format and sends a frame in the ATM format.

Maximum Transfer Unit (MTU)

Each data link layer protocol has its own frame format. One of the fields defined in the format is the maximum size of the data field. In other words, when a datagram is encapsulated in a frame, the total size of the datagram must be less than this maximum size, which is defined by the restriction imposed by the hardware and software used in the network (see Fig. 20.10).

Figure 20.10 *MTU*

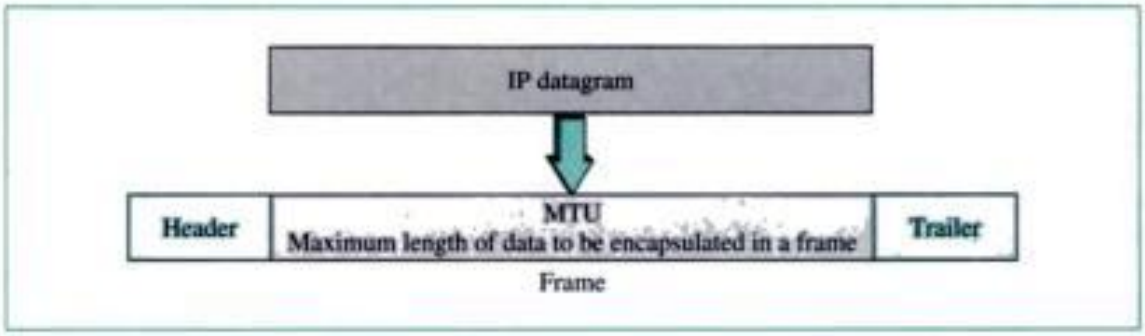

To make the IP independent of the physical network, the packagers decided to make the maximum length of the IP datagram equal to the largest **maximum transfer unit (MTU)** defined so far (65,535 bytes). This makes transmission more efficient if we use a protocol with an MTU of this size. However, for other physical networks, we must divide the datagram to make it possible to pass through these networks. This is called **fragmentation.**

When a datagram is fragmented, each fragment has its own header with most of the fields repeated, but some changed. A fragmented datagram may itself be fragmented if it encounters a network with an even smaller MTU. In other words, a datagram can be fragmented several times before it reaches the final destination.

Copyrighted material

A datagram can be fragmented by the source host or any router in the path. The reassembly of the datagram, however, is done only by the destination host because each fragment becomes an independent datagram. Whereas the fragmented datagram can travel through different routes, and we can never control or guarantee which route a fragmented datagram may take, all the fragments belonging to the same datagram should finally arrive at the destination host. So it is logical to do the reassembly at the final destination.

Fields Related to Fragmentation

The fields that are related to fragmentation and reassembly of an IP datagram are the identification, flags, and fragmentation offset fields.

- **Identification.** This field identifies a datagram originating from the source host. When a datagram is fragmented, the value in the identification field is copied into all fragments. In other words, all fragments have the same identification number, which is also the same as the original datagram. The identification number helps the destination in reassembling the datagram. It knows that all fragments having the same identification value should be assembled into one datagram.
- **Flags.** This is a 3-bit field. The first bit is reserved. The second bit is called the *do not fragment* bit. If its value is 1, the machine must not fragment the datagram. If it cannot pass the datagram through any available physical network, it discards the datagram and sends an ICMP error message to the source host (next section). If its value is 0, the datagram can be fragmented if necessary. The third bit is called the *more fragment* bit. If its value is 1, it means the datagram is not the last fragment; there are more fragments after this one. If its value is 0, it means this is the last or only fragment.
- **Fragmentation offset.** This 13-bit field shows the relative position of this fragment with respect to the whole datagram. It is the offset of the data in the original datagram measured in units of 8 bytes. Figure 20.11 shows a datagram with a data size of 4000 bytes fragmented into three parts. The bytes in the original datagram are numbered 0 to 3999. The first fragment carries bytes 0 to 1399. The offset for this

Figure 20.11 *Fragmentation example*

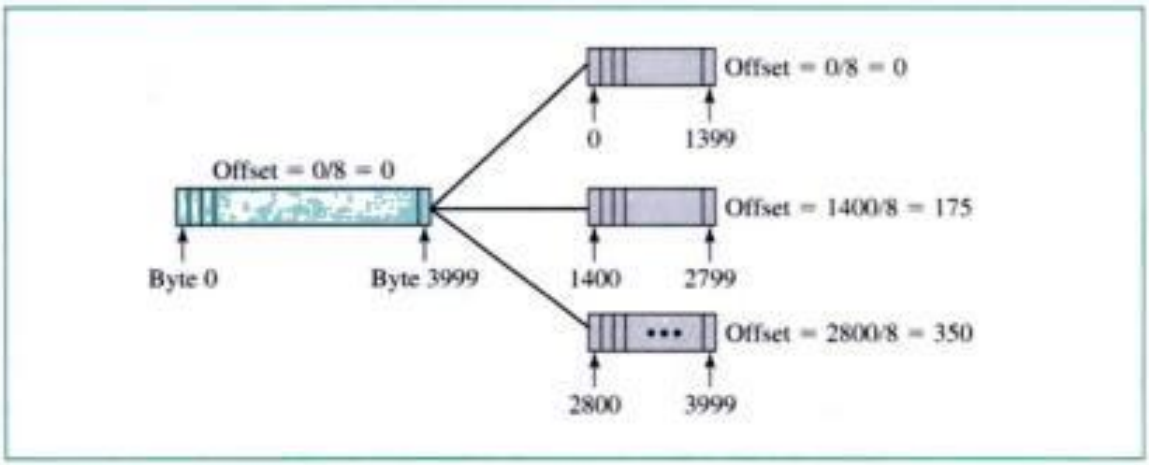

Copyrighted material

datagram is 0/8 = 0. The second fragment carries bytes 1400 to 2799; the offset value for this fragment is 1400/8 = 175. Finally, the third fragment carries bytes 2800 to 3999. The offset value for this fragment is 2800/8 = 350.

Remember that the value of the offset is measured in units of 8 bytes. This is done because the length of the offset field is only 13 bits long and cannot represent a sequence of bytes greater than 8191. This forces hosts or routers that fragment datagrams to choose the size of each fragment so that the first byte number is divisible by 8.

20.3 ICMP

As discussed in Section 20.2, the IP provides unreliable and connectionless datagram delivery. It was designed this way to make efficient use of network resources. IP is a best-effort delivery service that delivers a datagram from its original source to its final destination. However, it has two deficiencies: lack of error control and lack of assistance mechanisms.

IP has no error-reporting or error-correcting mechanism. What happens if something goes wrong? What happens if a router must discard a datagram because it cannot find a router to the final destination, or because the time-to-live field has a zero value? What happens if the final destination host must discard all fragments of a datagram because it has not received all fragments within a predetermined time limit? These are examples of situations where an error has occurred and IP has no built-in mechanism to notify the original host.

IP also lacks a mechanism for host and management queries. A host sometimes needs to determine if a router or another host is alive. And sometimes a network manager needs information from another host or router.

The **Internet Control Message Protocol (ICMP)** has been designed to compensate for the above two deficiencies. It is a companion to the IP.

ICMP itself is a network layer protocol. However, its messages are not passed directly to the data link layer as would be expected. Instead, the messages are first encapsulated inside IP datagrams before going to the lower layer (see Fig. 20.12).

The value of the protocol field in the IP datagram is 1 to indicate that the IP data are an ICMP message.

Figure 20.12 *ICMP encapsulation*

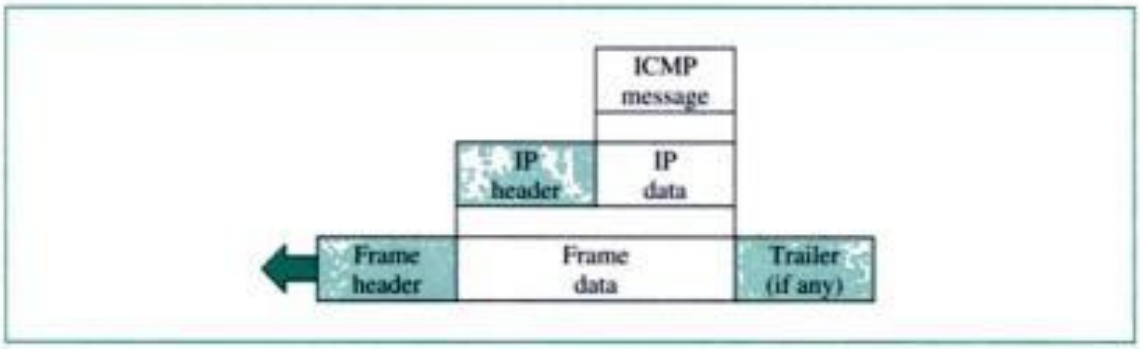

Copyrighted material

Echo Request and Reply The **echo-request** and **echo-reply** messages are designed for diagnostic purposes. Network managers and users utilize this pair of messages to identify network problems. The combination of echo-request and echo-reply messages determines whether two systems (hosts or routers) can communicate with each other.

Time-stamp Request and Reply Two machines (hosts or routers) can use the **time-stamp-request** and **time-stamp-reply messages** to determine the round-trip time needed for an IP datagram to travel between them. It can also be used to synchronize the clocks in two machines.

Address Mask Request and Reply The IP address of a host contains a network address, subnet address, and host identifier. A host may know its full IP address, but it may not know which part of the address defines the network and subnetwork address and which part corresponds to the host identifier. In this case, the host can send an **address mask request message** to a router. The router then sends a mask in an **address mask reply message.**

Router Solicitation and Advertisement As we discussed in the redirection-message section, a host that wants to send data to a host on another network needs to know the address of routers connected to its own network. Also, the host must know if the routers are alive and functioning. The **router-solicitation** and **router-advertisement** messages can help in this situation. A host can broadcast (or multicast) a router-solicitation message. The router or routers that receive the solicitation message broadcast their routing information using the router-advertisement message. A router can also periodically send router-advertisement messages even if no host has solicited. Note that when a router sends out an advertisement, it announces not only its own presence but also the presence of all routers on the network of which it is aware.

20.4 IPV6

The network layer protocol in the Internet is currently **IPv4**. IPv4 provides the host-to-host communication between systems in the Internet. Although IPv4 is well designed, data communication has evolved since the inception of IPv4 in the 1970s. IPv4 has some deficiencies that make it unsuitable for the fast-growing Internet, including the following:

- IPv4 has a two-level address structure (netid and hostid) categorized into five classes (A, B, C, D, and E). The use of address space is inefficient.
- The Internet must accommodate real-time audio and video transmission. This type of transmission requires minimum delay strategies and reservation of resources not provided in the IPv4 design.
- The Internet must accommodate encryption and authentication of data for some applications. Originally, no security mechanism was provided by IPv4.

To overcome these deficiencies, **Internet Protocol, version 6 (IPv6),** also known as **Internetworking Protocol, next generation (IPng),** was proposed and is now a standard. In IPv6, the Internet protocol was extensively modified to accommodate the unforeseen growth of the Internet. The format and the length of the IP addresses were changed along with the packet format.

Copyrighted material

The next-generation IP, or IPv6, has some advantages over IPv4 that can be summarized as follows:

- **Larger address space.** An IPv6 address is 128 bits long. Compared with the 32-bit address of IPv4, this is a huge (2^{96}) increase in the address space.
- **Better header format.** IPv6 uses a new header format in which options are separated from the base header and inserted, when needed, between the base header and the upper-layer data. This simplifies and speeds up the routing process because most of the options do not need to be checked by routers.
- **New options.** IPv6 has new options to allow for additional functionalities.
- **Allowance for extension.** IPv6 is designed to allow the extension of the protocol if required by new technologies or applications.
- **Support for resource allocation.** In IPv6, the type-of-service field has been removed, but a mechanism called **flow label** has been added to enable the source to request special handling of the packet. This mechanism can be used to support traffic such as real-time audio and video.
- **Support for more security.** The encryption and authentication options in IPv6 provide confidentiality and integrity of the packet.

IPv6 Addresses

An IPv6 address consists of 16 bytes (octets); it is 128 bits long (see Fig. 20.15).

Figure 20.15 *IPv6 address*

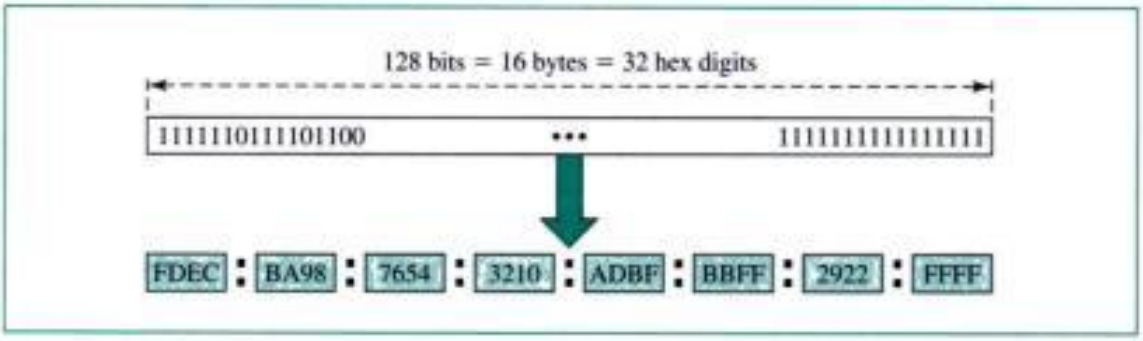

Hexadecimal Colon Notation

To make addresses more readable, IPv6 specifies **hexadecimal colon notation.** In this notation, 128 bits are divided into eight sections, each 2 bytes in length. Two bytes in hexadecimal notation requires four hexadecimal digits. Therefore, the address consists of 32 hexadecimal digits, with every 4 digits separated by a colon.

Abbreviation

Although the IP address, even in hexadecimal format, is very long, many of the digits are zeros. In this case, we can **abbreviate** the address. The leading zeros of a section (four digits between two colons) can be omitted. Only the leading zeros can be dropped, not the trailing zeros. For an example, see Figure 20.16.

Copyrighted material

Figure 20.16 *Abbreviated address*

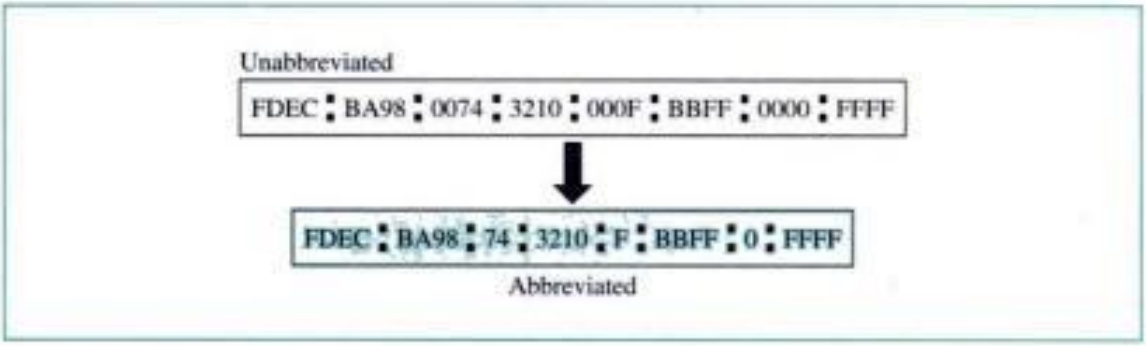

Using this form of abbreviation, 0074 can be written as 74, 000F as F, and 0000 as 0. Note that 3210 cannot be abbreviated. Further abbreviations are possible if there are consecutive sections consisting of zeros only. We can remove the zeros altogether and replace them with a double semicolon. Figure 20.17 shows the concept.

Figure 20.17 *Abbreviated address with consecutive zeros*

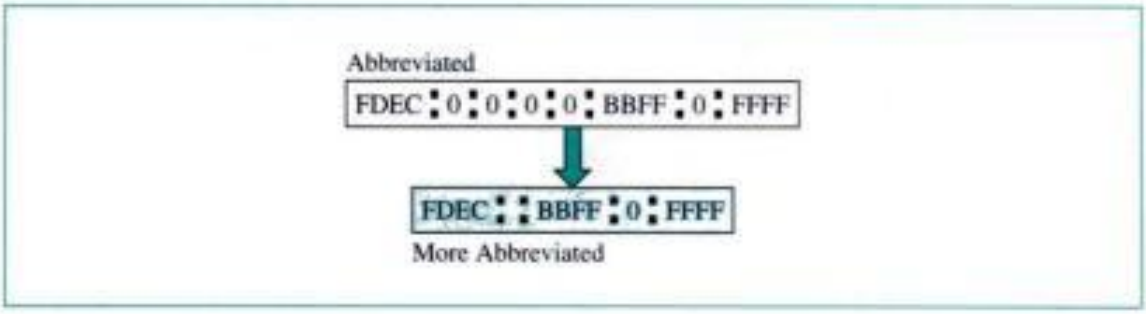

Note that this type of abbreviation is allowed only once per address. If there are two runs of zero sections, only one of them can be abbreviated. Reexpansion of the abbreviated address is very simple: Align the unabbreviated portions and insert zeros to get the original expanded address.

CIDR Notation

IPv6 allows classless addressing and CIDR notation. For example, Figure 20.18 shows how we can define a prefix of 60 bits using CIDR.

Figure 20.18 *CIDR address*

Categories of Addresses

IPv6 defines three types of addresses: unicast, anycast, and multicast.

Copyrighted material

- **Priority.** The 4-bit priority field defines the priority of the packet with respect to traffic congestion.
- **Flow label.** The flow label is a 3-byte (24-bit) field that is designed to provide special handling for a particular flow of data.
- **Payload length.** This 2-byte payload length field defines the total length of the IP datagram excluding the base header.
- **Next header.** The next header is an 8-bit field defining the header that follows the base header in the datagram. The next header is either one of the optional extension headers used by IP or the header for an upper-layer protocol such as UDP or TCP. Each extension header also contains this field.
- **Hop limit.** This 8-bit hop limit field serves the same purpose as the TTL (time to live) field in IPv4.
- **Source address.** The source address field is a 16-byte (128-bit) Internet address that identifies the original source of the datagram.
- **Destination address.** The destination address field is a 16-byte (128-bit) Internet address that usually identifies the final destination of the datagram. However, if source routing is used, this field contains the address of the next router.

Extension Headers

The length of the base header is fixed at 40 bytes. However, to give more functionality to the IP datagram, the base header can be followed by up to six **extension headers.** Many of these headers are options in IPv4. For more details see Forouzan, *TCP/IP Protocol Suite,* 2d ed., McGraw-Hill.

Fragmentation

The concept of fragmentation is the same as that in IPv4. However, the place where fragmentation takes place differs. In IPv4, the source or a router is required to fragment if the size of the datagram is larger than the MTU of the network over which the datagram should travel. In IPv6, only the original source can fragment. A source must use a path MTU discovery technique to find the smallest MTU supported by any network on the path. The source then fragments, using this knowledge.

If the source does not use the path MTU discovery technique, it must fragment the datagram to a size of 576 bytes or smaller. This is the minimum size of MTU required for each network connected to the Internet. Fragmentation in IPv6 is handled by one of the options in the extension header.

Authentication and Privacy

IPv6 provides authentication and privacy using options in the extension header. We will discuss network security in Chapter 31.

ICMPv6

Another protocol that has been modified in version 6 of the Internet is ICMP **(ICMPv6).** This new version follows the same strategy and purposes as version 4. ICMPv4 has been modified to make it more suitable for IPv6. In addition, some protocols

Copyrighted material

that were independent in version 4 are now part of ICMPv6. Figure 20.20 compares the network layer of version 4 to that of version 6.

Figure 20.20 *Comparison of network layers in version 4 and version 6*

ARP and IGMP in version 4 are combined in ICMPv6. RARP is dropped from the suite because it is seldom used.

Transition from IPv4 to IPv6

Because of the huge number of systems on the Internet, the transition from IPv4 to IPv6 cannot happen suddenly. It takes a considerable amount of time before every system in the Internet can move from IPv4 to IPv6. The transition should be smooth to prevent any problems between IPv4 and IPv6 systems.

Three strategies have been devised by the IETF to make the transition period smoother (see Fig. 20.21).

Figure 20.21 *Three transition strategies*

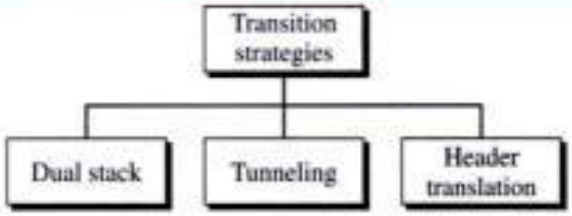

Dual Stack

It is recommended that all hosts, before migrating completely to version 6, have a **dual stack** of protocols. In other words, a station should run IPv4 and IPv6 simultaneously until all the Internet uses IPv6. See Figure 20.22 for the layout of dual-stack configuration.

To determine which version to use when sending a packet to a destination, the source host queries the DNS (see Chapter 25). If the DNS returns an IPv4 address, the source host sends an IPv4 packet. If the DNS returns an IPv6 address, the source host sends an IPv6 packet.

Tunneling

Tunneling is a strategy used when two computers using IPv6 want to communicate with each other when the packet must pass through a region that uses IPv4. To pass through

Copyrighted material

Figure 20.22 *Dual stack*

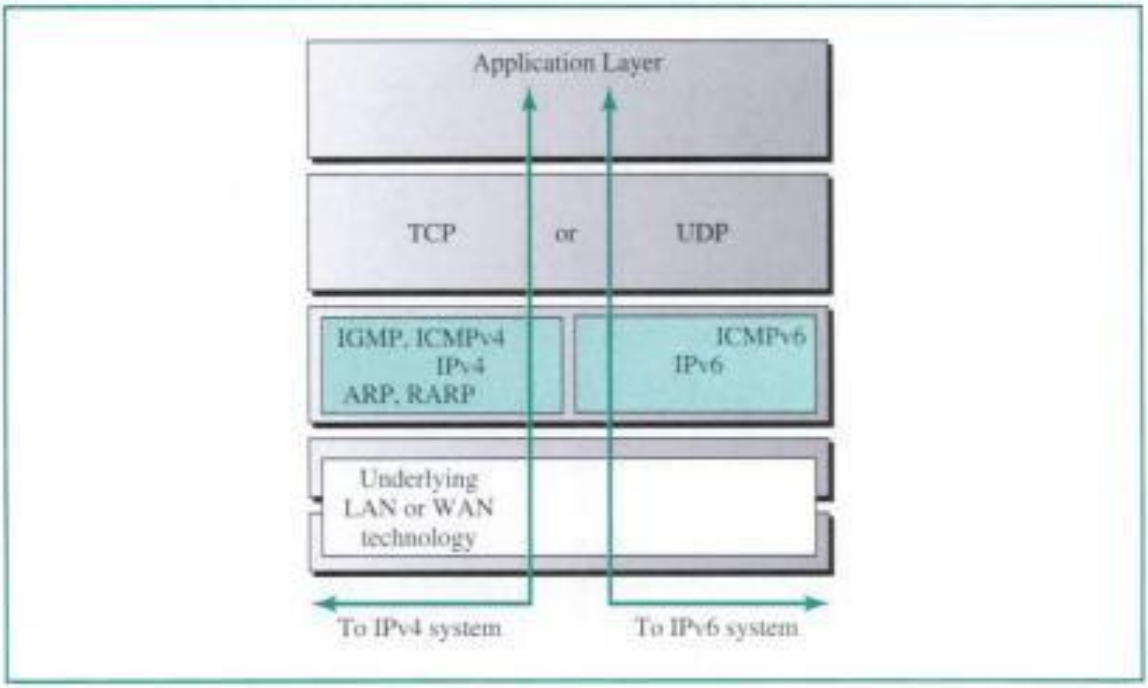

this region, the packet must have an IPv4 address. So the IPv6 packet is encapsulated in an IPv4 packet when it enters the region, and the IPv6 packet leaves its capsule when it exits the region. It seems as if the IPv6 packet enters a tunnel at one end and emerges at the other end. To make it clear that the IPv4 packet is carrying an IPv6 packet as data, the protocol value is set to 41. See Figure 20.23.

Figure 20.23 *Tunneling*

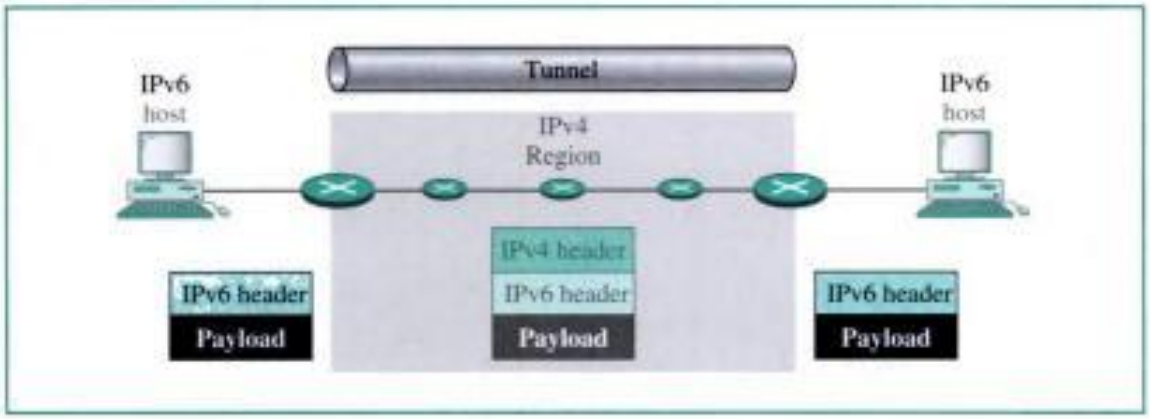

Header Translation

Header translation is necessary when the majority of the Internet has moved to IPv6 but some systems still use IPv4. The sender wants to use IPv6, but the receiver does not understand IPv6. Tunneling does not work in this situation because the packet must be in the IPv4 format to be understood by the receiver. In this case, the header format must be changed totally through header translation. The header of the IPv6 packet is converted to an IPv4 header (see Fig. 20.24).

Copyrighted material

Figure 20.24 *Header translation*

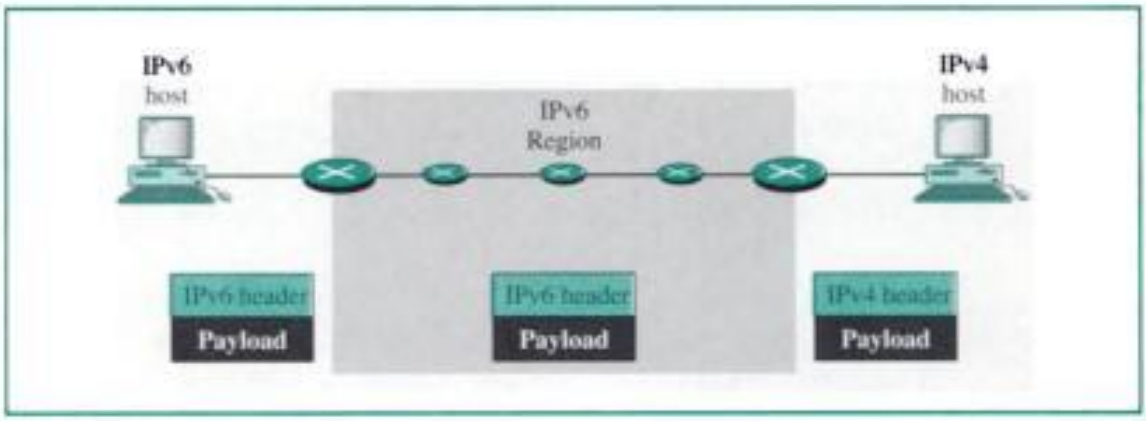

20.5 KEY TERMS

abbreviation
address mask request and reply
Address Resolution Protocol (ARP)
anycast address
base header
best-effort delivery
datagram
destination address
destination-unreachable message
dual stack
dynamic mapping
echo-request and -reply message
error-reporting message
extension header
flow label
fragmentation
fragmentation offset
header translation
hexadecimal colon notation
hop limit
Internet Control Message Protocol (ICMP)
Internet Protocol (IP)
Internetworking Control Message Protocol, version 6 (ICMPv6)
Internetworking Protocol, next generation (IPng)
Internetworking Protocol, version 4 (IPv4)
Internetworking Protocol, version 6 (IPv6)
maximum transfer unit (MTU)
next header
parameter-problem message
query message
redirection message
Reverse Address Resolution Protocol (RARP)
router-solicitation and -advertisement message
source-quench message
static mapping
time to live
time-exceeded message
time-stamp request and reply message
tunneling

20.6 SUMMARY

- The Address Resolution Protocol (ARP) is a dynamic mapping method that finds a physical address, given an IP address.
- An ARP request is broadcast to all devices on the network.
- An ARP reply is unicast to the host requesting the mapping.

Copyrighted material

4. What do we mean when we say IP is a best-effort delivery service?
5. What is the name of a packet in the IP layer?
6. What is purpose of the protocol field in the IP header?
7. Why does the IP checksum cover just the header?
8. What is the MTU and how is fragmentation related to it?
9. Which fields in the IP header remain the same as the packet travels from source host to destination host?
10. What is the function of ICMP?
11. What is the purpose of an ICMP redirection message?
12. How many bits is an IPv4 address? How many bits is an IPv6 address?
13. Name and describe the three types of IPv6 addresses.
14. Why are RARP and IGMP missing from IPv6?
15. What strategies have been devised for the transition of IPv4 to IPv6?

Multiple-Choice Questions

16. _____ is a dynamic mapping protocol in which a physical address is found for a given IP address.
    a. ARP
    b. RARP
    c. ICMP
    d. None of the above
17. A router reads the _____ address on a packet to determine the next hop.
    a. IP
    b. MAC
    c. Source
    d. ARP
18. The target hardware address on an Ethernet is _____ in an ARP request.
    a. 0x000000000000
    b. 0.0.0.0
    c. Variable
    d. Class-dependent
19. An ARP reply is _____ to _____.
    a. Broadcast; all hosts
    b. Multicast; one host
    c. Unicast; all hosts
    d. Unicast; one host
20. An ARP request is _____ to _____.
    a. Broadcast; all hosts
    b. Multicast; one host
    c. Unicast; all hosts
    d. Unicast; one host

Copyrighted material

21. What is the maximum size of the data portion of the IP datagram?
    a. 65,535 bytes
    b. 65,515 bytes
    c. 65,475 bytes
    d. 65,460 bytes
22. A best-effort delivery service such as IP does not include _____.
    a. Error checking
    b. Error correction
    c. Datagram acknowledgment
    d. All the above
23. An HLEN value of decimal 10 means _____.
    a. There is 10 bytes of options
    b. There is 40 bytes of options
    c. There is 10 bytes in the header
    d. There is 40 bytes in the header
24. In IPv4, what is the value of the total length field in bytes if the header is 28 bytes and the data field is 400 bytes?
    a. 428
    b. 407
    c. 107
    d. 427
25. In IPv4, what is the length of the data field given an HLEN value of 12 and total length value of 40,000?
    a. 39,988
    b. 40,012
    c. 40,048
    d. 39,952
26. A datagram is fragmented into three smaller datagrams. Which of the following is true?
    a. The *do not fragment* bit is set to 1 for all three datagrams.
    b. The *more fragment* bit is set to 0 for all three datagrams.
    c. The identification field is the same for all three datagrams.
    d. The offset field is the same for all three datagrams.
27. If the fragment offset has a value of 100, it means that _____.
    a. The datagram has not been fragmented
    b. The datagram is 100 bytes in size
    c. The first byte of the datagram is byte 100
    d. The first byte of the datagram is byte 800
28. What is needed to determine the number of the last byte of a fragment?
    a. Identification number
    b. Offset number

Copyrighted material

c. Total length
d. (b) and (c)

29. The IP header size _____.
a. Is 20 to 60 bytes long
b. Is 20 bytes long
c. Is 60 bytes long
d. Depends on the MTU

30. If a host needs to synchronize its clock with another host, it sends a _____ message.
a. Time-stamp-request
b. Source-quench
c. Router-advertisement
d. Time-exceeded

31. Which of the following types of ICMP messages needs to be encapsulated into an IP datagram?
a. Time-exceeded
b. Multicasting
c. Echo reply
d. All the above

32. The purpose of echo request and echo reply is to _____.
a. Report errors
b. Check node-to-node communication
c. Check packet lifetime
d. Find IP addresses

33. In error reporting the encapsulated ICMP packet goes to _____.
a. The sender
b. The receiver
c. A router
d. Any of the above

34. When the hop-count field reaches zero and the destination has not been reached, a _____ error message is sent.
a. Destination-unreachable
b. Time-exceeded
c. Parameter-problem
d. Redirection

35. When not all fragments of a message have been received within the designated amount of time, a _____ error message is sent.
a. Source-quench
b. Time-exceeded
c. Parameter-problem
d. Time-stamp-request

Copyrighted material

36. Errors in the header or option fields of an IP datagram require a _____ error message.
    a. Parameter-problem
    b. Source-quench
    c. Router-solicitation
    d. Redirection
37. A _____ can learn about network _____ by sending out a router-solicitation packet.
    a. Router; routers
    b. Router; hosts
    c. Host; hosts
    d. Host; routers
38. One method to alert a source host of congestion is the _____ message.
    a. Redirection
    b. Echo-request
    c. Source-quench
    d. Destination-unreachable
39. A time-exceeded message is generated if _____.
    a. The round-trip time between hosts is close to zero
    b. The time-to-live field has a zero value
    c. Fragments of a message do not arrive within a set time
    d. (b) and (c)
40. To determine whether a node is reachable, _____ message can be sent.
    a. An echo-reply
    b. An echo-request
    c. A redirection
    d. A source-quench
41. Which of the following is a necessary part of the IPv6 datagram?
    a. Base header
    b. Extension header
    c. Data packet from the upper layer
    d. (a) and (c)
42. In IPv6, the _____ field in the base header restricts the lifetime of a datagram.
    a. Version
    b. Priority
    c. Next-header
    d. Hop limit
    e. Neighbor-advertisement

Exercises

43. Is the size of the ARP packet fixed? Explain.
44. What is the size of an ARP packet when the protocol is IP and the hardware is Ethernet?

Copyrighted material

CHAPTER 21

Unicast and Multicast Routing: Routing Protocols

An internet is a combination of networks connected by routers. When a packet goes from a source to a destination, it will probably pass through many routers until it reaches the router attached to the destination network. A router consults a routing table when a packet is ready to be forwarded. The routing table specifies the optimum path for the packet. However, the table can be either static or dynamic. A *static table* does not change frequently. A *dynamic table,* on the other hand, is updated automatically when there is a change somewhere in the internet. Today, an internet needs dynamic routing tables. The tables need to be updated as soon as there is a change in the internet. For instance, they need to be updated when a route is down, and they need to be updated whenever a better route has been created.

Routing protocols have been created in response to the demand for dynamic routing tables. A routing protocol is a combination of rules and procedures that lets routers in the internet inform one another of changes. It allows routers to share whatever they know about the internet or their neighborhood. The sharing of information allows a router in San Francisco to know about the failure of a network in Texas. The routing protocols also include procedures for combining information received from other routers.

In this chapter, we first discuss unicast routing, one source to one destination. We then define multicast routing, one source to a group of destinations.

21.1 UNICAST ROUTING

In unicast communication, there is one source and one destination. The relationship between the source and the destination is one-to-one. In this type of communication, both the source and the destination addresses, in the IP datagram, are the unicast addresses assigned to the host (or host port, to be more exact). In Figure 21.1, a unicast packet starts from source S1 and passes through routers to reach destination D1. We have shown the networks as a link between the routers to simplify the figure.

Note that in **unicast routing,** when a router receives a packet, it forwards the packet through only one of its ports (the one belonging to the optimum path) as defined

Copyrighted material

Figure 21.1 *Unicasting*

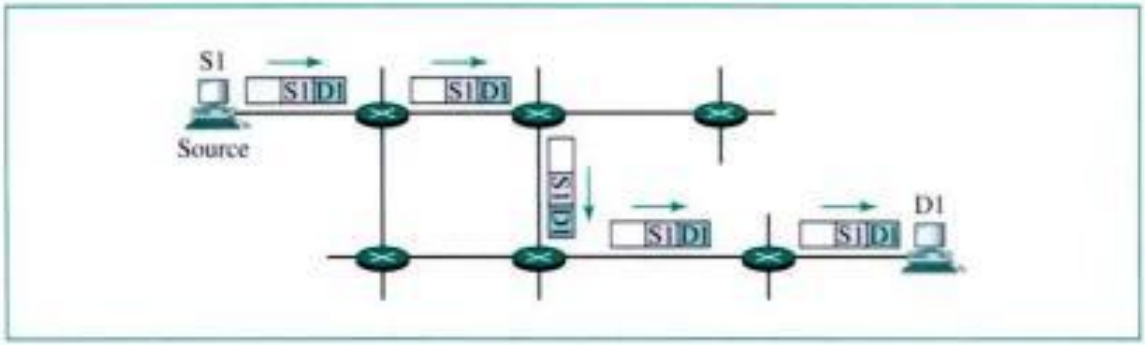

in the routing table. The router may discard the packet if it cannot find the destination address in its routing table.

In unicast routing, the router forwards the received packet through only one of its ports.

Metric

A router receives a packet from a network and passes it to another network. A router is usually attached to several networks. When it receives a packet, to which network should it pass the packet? The decision is based on optimization: Which of the available pathways is the optimum pathway? A **metric** is a cost assigned for passing through a network. The total metric of a particular route is equal to the sum of the metrics of networks that comprise the route. A router chooses the route with the shortest (smallest) metric.

The metric assigned to each network depends on the type of protocol. Some simple protocols, such as the **Routing Information Protocol (RIP),** treat all networks as equals. The cost of passing through each network is the same; it is one hop count. So if a packet passes through 10 networks to reach the destination, the total cost is 10 hop counts.

Other protocols, such as **Open Shortest Path First (OSPF),** allow the administrator to assign a cost for passing through a network based on the type of service required. A route through a network can have different costs (metrics). For example, if maximum throughput is the desired type of service, a satellite link has a lower metric than a fiber-optic line. On the other hand, if minimum delay is the desired type of service, a fiber-optic line has a lower metric than a satellite line. OSPF allows each router to have several routing tables based on the required type of service.

Other protocols define the metric totally differently. In the **Border Gateway Protocol (BGP),** the criterion is the policy, which can be set by the administrator. The policy defines what paths should be chosen.

Interior and Exterior Routing

Today, an internet can be so large that one routing protocol cannot handle the task of updating the routing tables of all routers. For this reason, an internet is divided into autonomous systems. An **autonomous system (AS)** is a group of networks and routers

Copyrighted material

under the authority of a single administration. Routing inside an autonomous system is referred to as **interior routing.** Routing between autonomous systems is referred to as **exterior routing.** Each autonomous system can choose an interior routing protocol to handle routing inside the autonomous system. However, only one exterior routing protocol is usually chosen to handle routing between autonomous systems.

21.2 UNICAST ROUTING PROTOCOLS

Several interior and exterior routing protocols are in use. In this section, we cover only the most popular ones. We discuss two interior routing protocols, RIP and OSPF, and one exterior routing protocol, BGP (see Fig. 21.2).

Figure 21.2 *Popular routing protocols*

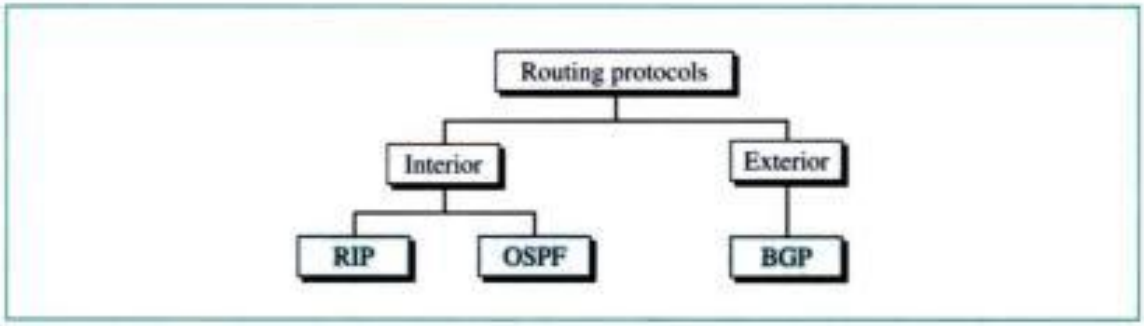

RIP and OSPF can be used to update routing tables inside an autonomous system. BGP can be used to update routing tables for routers that join the autonomous systems together.

In Figure 21.3, routers R1, R2, R3, and R4 use an interior and an exterior routing protocol. The other routers use only interior routing protocols. The solid lines show the

Figure 21.3 *Autonomous systems*

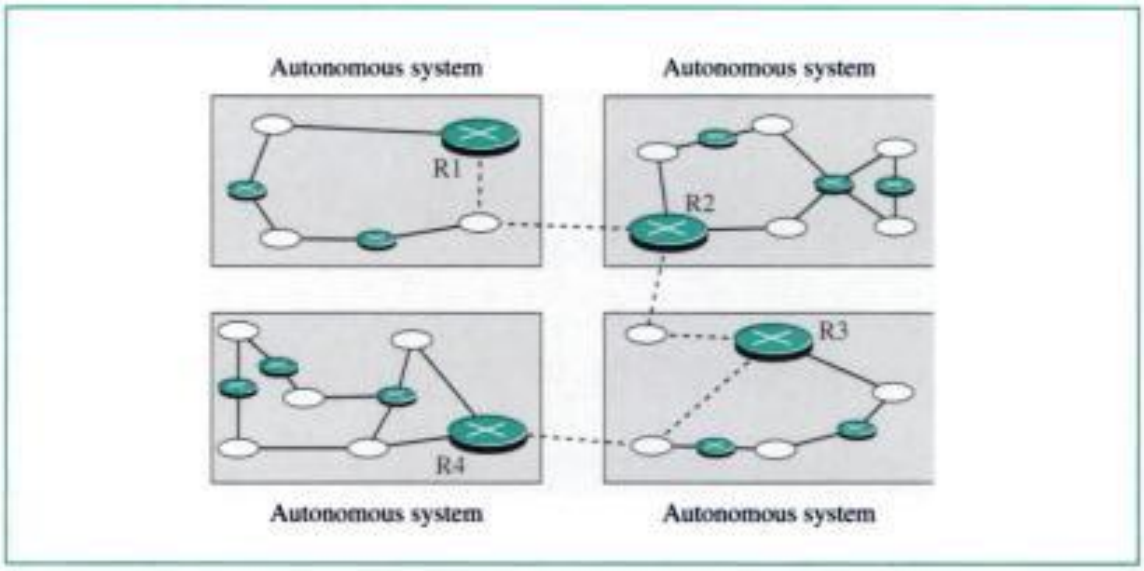

Copyrighted material

RIP Updating Algorithm
Receive: a response RIP message
1. Add one hop to the hop count for each advertised destination.
2. Repeat the following steps for each advertised destination:
1. If (destination not in the routing table)
1. Add the advertised information to the table.
2. Else
1. If (next-hop field is the same)
1. Replace entry in the table with the advertised one.
2. Else
1. If (advertised hop count smaller than one in the table)
1. Replace entry in the routing table.
3. Return.

In Figure 21.4 a router receives a RIP message from router C. The message lists destination networks and their corresponding hop counts. The first step according to the updating algorithm is to increase the hop count by 1. Next, this updated RIP packet and the old routing table are compared. The result is a routing table with an up-to-date hop count for each destination. For Net1 there is no new information, so the Net1 entry remains the same.

For Net2, information in the table and in the message identifies the same next hop (router C). Although the value of the hop count in the table (2) is less than the one in

Figure 21.4 *Example of updating a routing table*

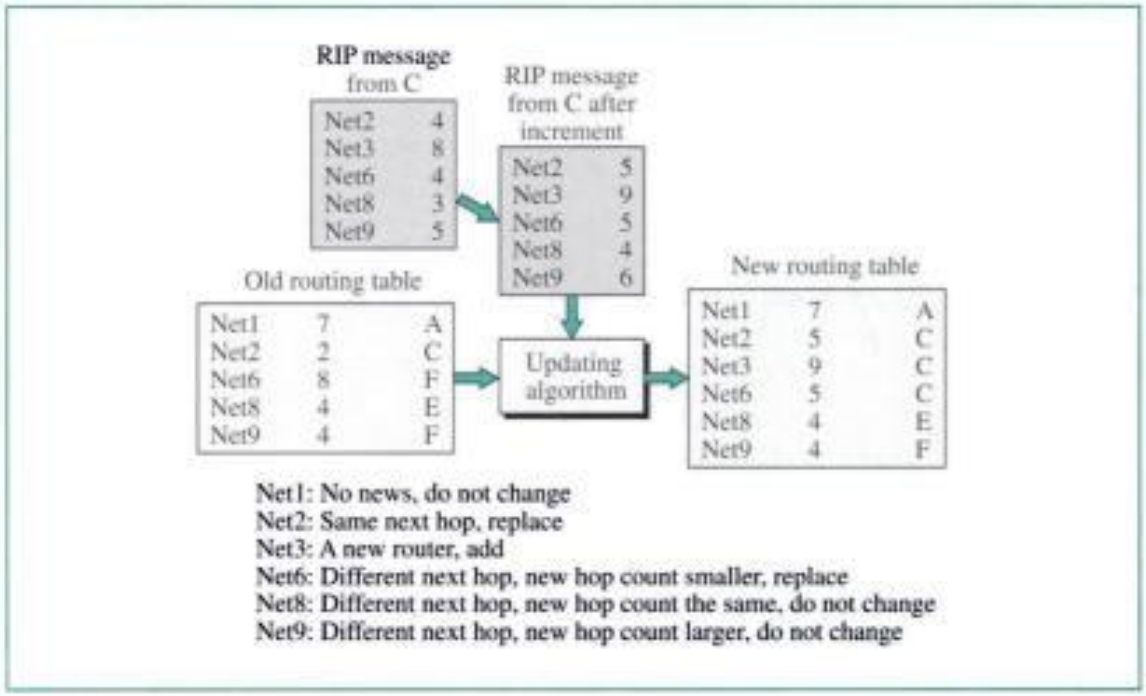

Copyrighted material

the message (5), the algorithm selects the one received in the message because the original value came from router C. This value is now invalid because router C is advertising a new value.

Net3 is added as a new destination. For Net6, the RIP packet contains a lower hop count, and this shows up on the new routing table. Both Net8 and Net9 retain their original values since the corresponding hop counts in the message are not an improvement.

Initializing the Routing Table

When a router is added to a network, it initializes a routing table for itself, using its configuration file. The table contains only the directly attached networks and the hop counts, which are initialized to 1. The next-hop field, which identifies the next router, is empty. Figure 21.5 shows the initial routing tables in a small autonomous system.

Figure 21.5 *Initial routing tables in a small autonomous system*

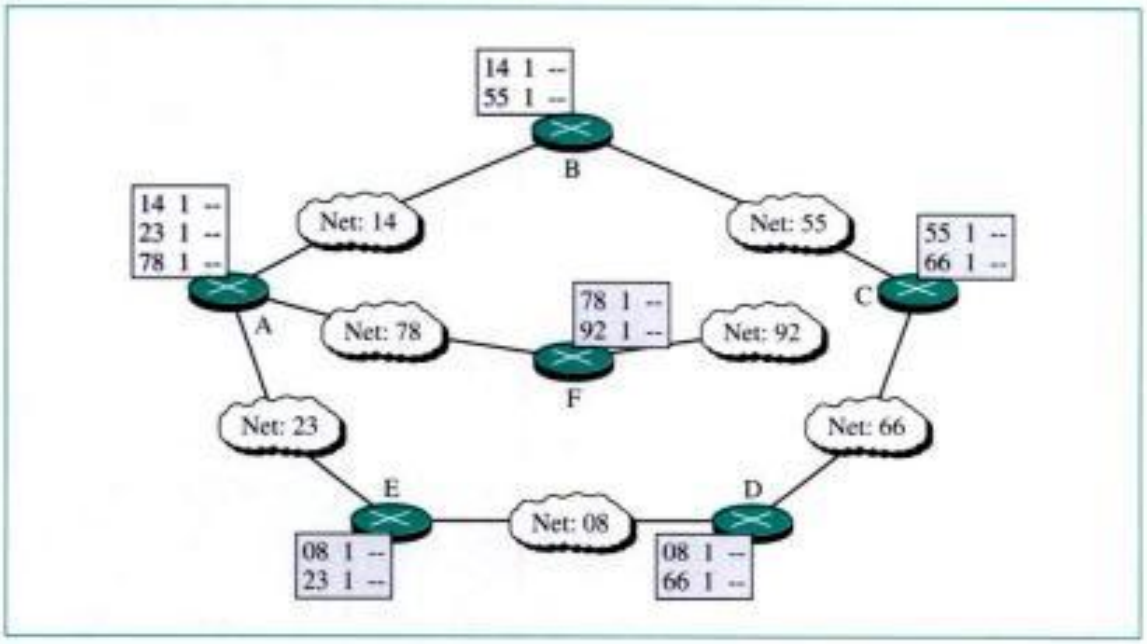

Updating the Routing Table

Each routing table is updated upon receipt of RIP messages using the RIP updating algorithm shown previously. Figure 21.6 shows our previous autonomous system with final routing tables.

OSPF

The **Open Shortest Path First (OSPF)** protocol is another interior routing protocol that is gaining in popularity. Its domain is also an autonomous system. Special routers called **autonomous system boundary routers** are responsible for dissipating information about other autonomous systems into the current system. To handle routing efficiently and in a timely manner, OSPF divides an autonomous system into areas.

Copyrighted material

Figure 21.6 *Final routing tables for Figure 21.5*

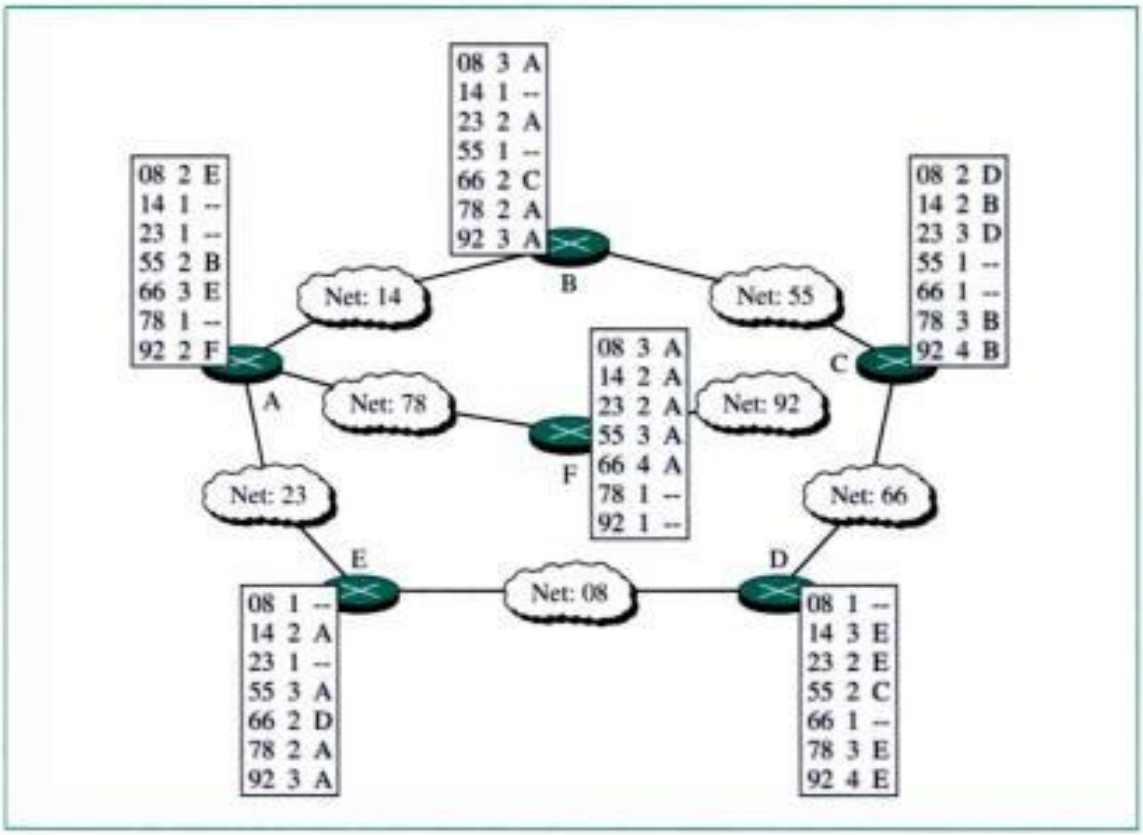

Areas

An **area** is a collection of networks, hosts, and routers all contained within an autonomous system. An autonomous system can also be divided into many different areas. All networks inside an area must be connected.

Routers inside an area flood the area with routing information. At the border of an area, special routers called **area border routers** summarize the information about the area and send it to other areas. Among the areas inside an autonomous system is a special area called the *backbone;* all the areas inside an autonomous system must be connected to the backbone. In other words, the backbone serves as a primary area, and the other areas serve as the secondary areas. However, this does not mean that the routers within areas cannot be connected with one another.

The routers inside the backbone are called the **backbone routers.** Note that a backbone router can also be an area border router.

If, due to some problem, the connectivity between a backbone and an area is broken, a **virtual link** between routers must be created by the administration to allow continuity of the functions of the backbone as the primary area.

Each area has an area identification. The area identification of the backbone is zero. Figure 21.7 shows an autonomous system and its areas.

Metric

The OSPF protocol allows the administrator to assign a cost, called the **metric,** to each route. The metric can be based on a type of service (minimum delay, maximum

Copyrighted material

Figure 21.7 *Areas in an autonomous system*

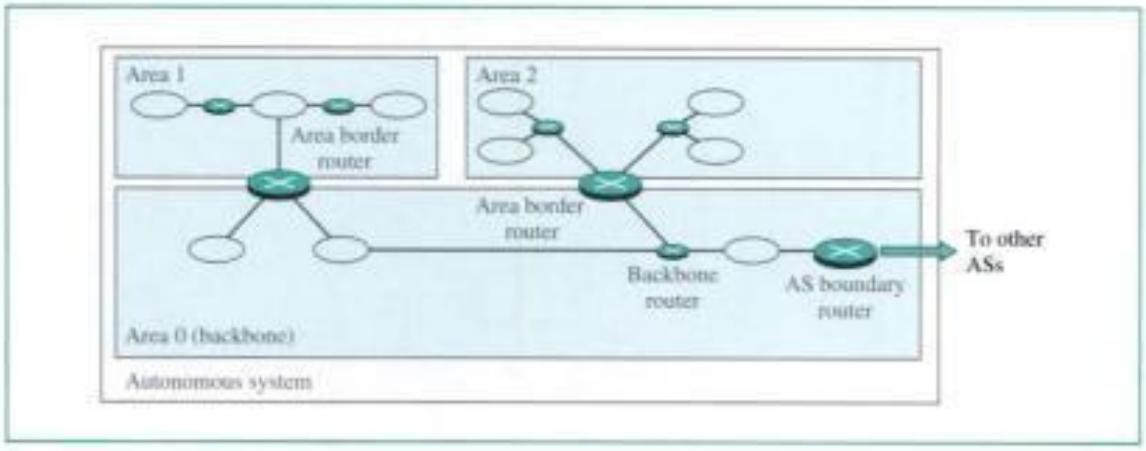

throughput, and so on). As a matter of fact, a router can have multiple routing tables, each based on a different type of service.

Link State Routing

OSPF uses **link state routing** to update the routing tables in an area. Before we discuss the details of the OSPF protocol, let us discuss link state routing, a process by which each router shares its knowledge about its neighborhood with every router in the area. The three keys to understanding how this method works are as follows:

1. **Sharing knowledge about the neighborhood.** Each router sends the *state of its neighborhood* to every other router in the area.
2. **Sharing with every other router.** Each router sends the state of its neighborhood to *every other router in the area*. It does so by **flooding,** a process whereby a router sends its information to all its neighbors (through all its output ports). Each neighbor sends the packet to all its neighbors, and so on. Every router that receives the packet sends copies to each of its neighbors. Eventually, every router (without exception) has received a copy of the same information.
3. **Sharing when there is a change.** Each router shares the state of its neighborhood only when there is a change. This rule contrasts with distance vector routing, where information is sent out at regular intervals regardless of change. This characteristic results in lower internet traffic than that required by distance vector routing.

The idea behind link state routing is that each router should have the exact topology of the internet at every moment. In other words, every router should have the whole "picture" of the internet. From this topology, a router can calculate the shortest path between itself and each network. The topology represented here means a graph consisting of nodes and edges. To represent an internet by a graph, however, we need more definitions.

Types of Links

In OSPF terminology, a connection is called a *link*. Four types of links have been defined: point-to-point, transient, stub, and virtual (see Fig. 21.8).

Copyrighted material

Figure 21.8 *Types of links*

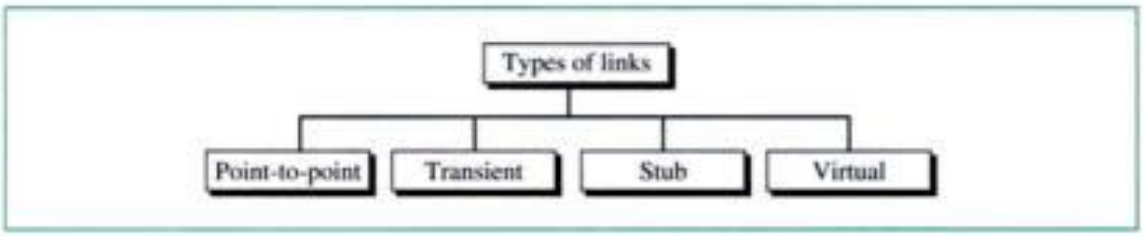

Point-to-Point Link A **point-to-point link** connects two routers without any other host or router in between. In other words, the purpose of the link (network) is just to connect the two routers. An example of this type of link is two routers connected by a telephone line or a T-line. There is no need to assign a network address to this type of link. Graphically, the routers are represented by nodes, and the link is represented by a bidirectional edge connecting the nodes. The metrics, which are usually the same, are shown at the two ends, one for each direction. In other words, each router has only one neighbor at the other side of the link (see Fig. 21.9).

Figure 21.9 *Point-to-point link*

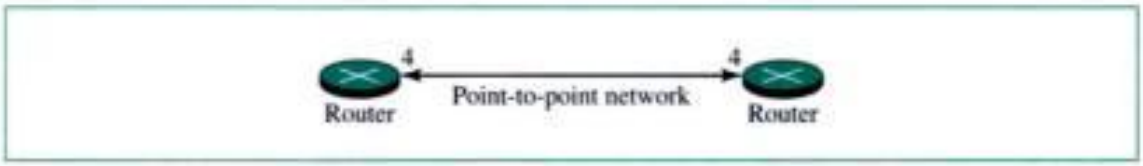

Transient Link A **transient link** is a network with several routers attached to it. The data can enter through any of the routers and leave through any router. All LANs and some WANs with two or more routers are of this type. In this case, each router has many neighbors. For example, consider the Ethernet in Figure 21.10*a*. Router A has routers B, C, D, and E as neighbors. Router B has routers A, C, D, and E as neighbors. If we want to show the neighborhood relationship in this situation, we have the graph shown in Figure 21.10*b*.

Figure 21.10 *Transient link*

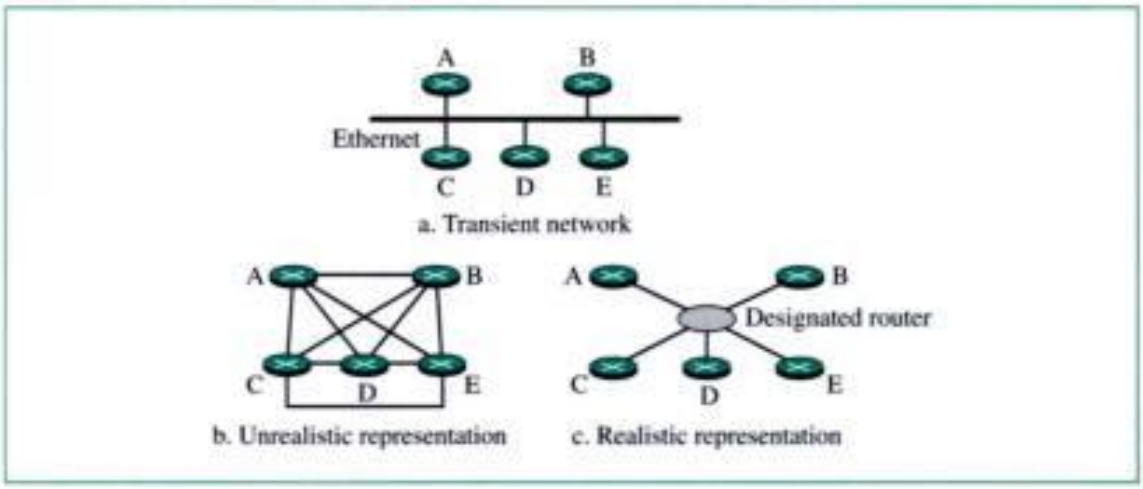

Copyrighted material

This is neither efficient nor realistic. It is not efficient because each router needs to advertise the neighborhood of four other routers, for a total of 20 advertisements. It is not realistic, because there is no single network (link) between each pair of routers; there is only one network that serves as a crossroad between all five routers.

To show that each router is connected to every other router through one single network, the network itself is represented by a node. However, because a network is not a machine, it cannot function as a router. One of the routers in the network takes this responsibility. It is assigned a dual purpose; it is a true router and a designated router. We can use the topology shown in Figure 21.10*c* to show the connections of a transient network.

Now each router has only one neighbor, the designated router (network). On the other hand, the designated router (the network) has five neighbors. We see that the number of neighbor announcements is reduced from 20 to 10. Still, the link is represented as a bidirectional edge between the nodes. However, while there is a metric from each node to the designated router, there is no metric from the designated router to any other node. The reason is that the designated router represents the network. We can only assign a cost to a packet that is passing through the network. We cannot charge for this twice. When a packet enters a network, we assign a cost; when a packet leaves the network to go to the router, there is no charge.

Stub Link A **stub link** is a network that is connected to only one router. The data packets enter the network through this single router and leave the network through this same router. This is a special case of the transient network. We can show this situation using the router as a node and using the designated router for the network. However, the link is only unidirectional, from the router to the network (see Fig. 21.11).

Figure 21.11 *Stub link*

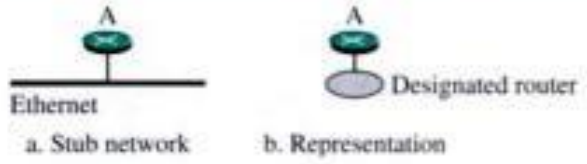

Virtual Link When the link between two routers is broken, the administration may create a virtual link between them, using a longer path that probably goes through several routers.

Graphical Representation

Let us now examine a small internet using link state routing and see how we can represent it graphically. Figure 21.12 shows a small internet with seven networks and six routers. Two of the networks are point-to-point networks. We use symbols such as N1 and N2 for transient and stub networks. There is no need to assign a symbol to a point-to-point network.

Copyrighted material

Figure 21.12 *Example of an internet*

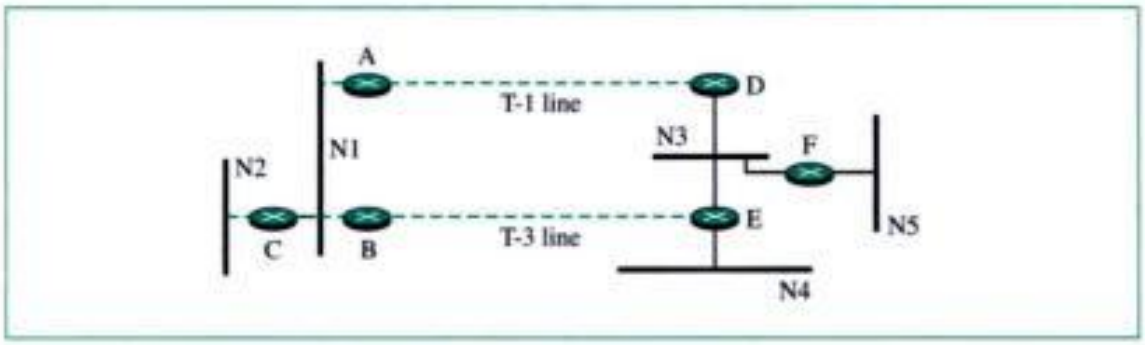

To show the above internet graphically, we use square nodes for the routers and ovals for the networks (represented by designated routers); see Figure 21.13. Note that we have three stub networks.

Figure 21.13 *Graphical representation of an internet*

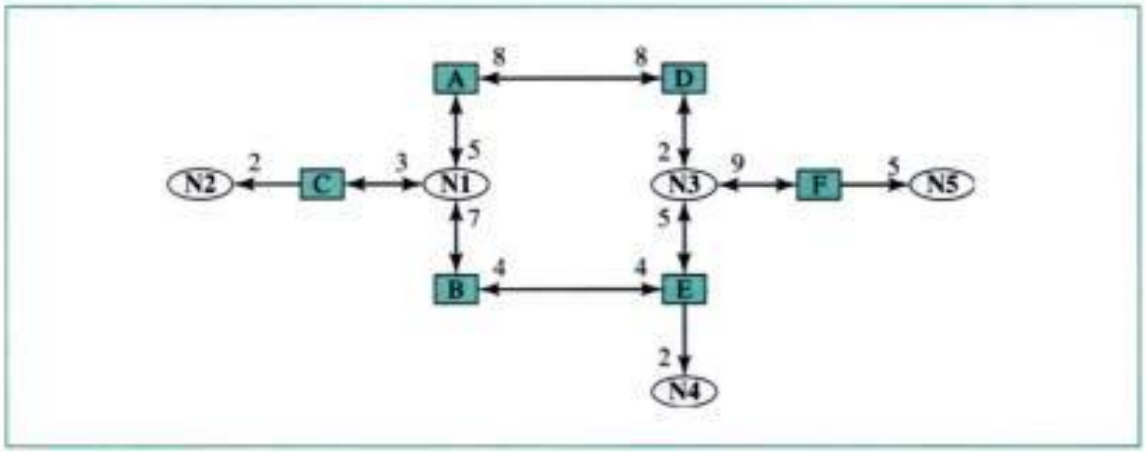

Link State Advertisements

To share information about their neighbors, each entity distributes **link state advertisements (LSAs).** An LSA announces the states of entity links. Depending on the type of entity, we can define five different LSAs (see Fig. 21.14).

Figure 21.14 *Types of LSAs*

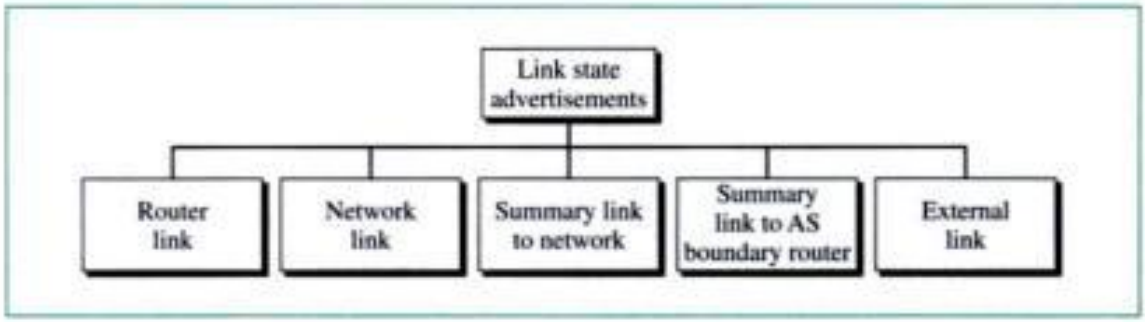

Copyrighted material

Figure 21.17 *Summary link to network*

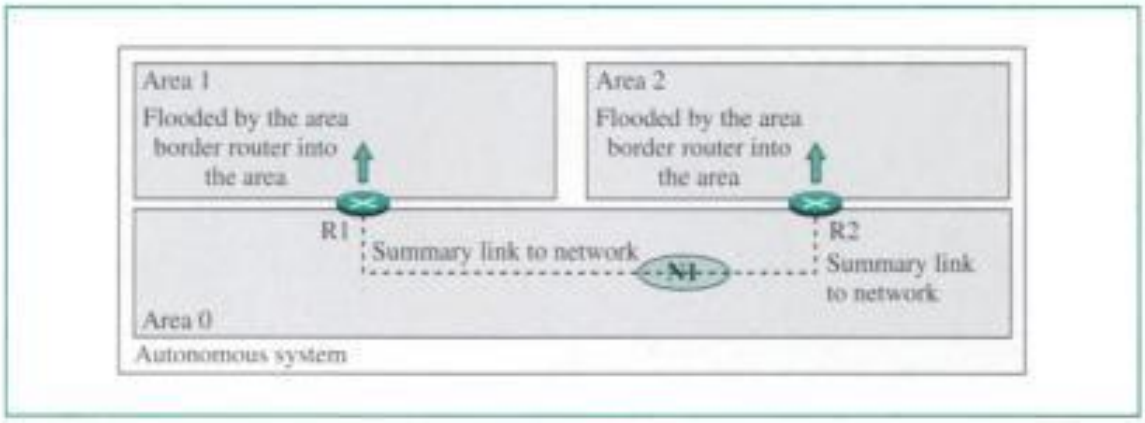

Figure 21.18 *Summary link to AS boundary router*

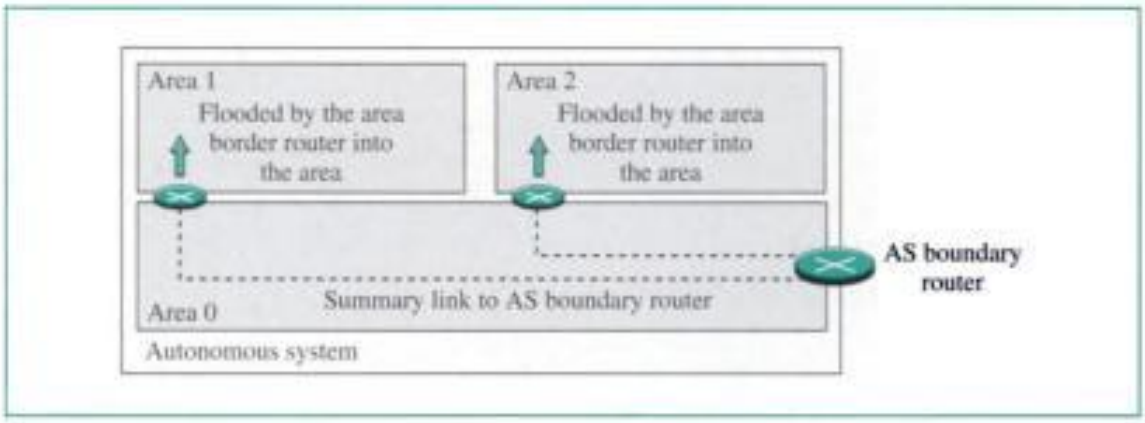

boundary router; the summary link to AS boundary router provides this information. The area border routers flood their areas with this information (see Fig. 21.18).

External Link Although the previous advertisement lets each router know the route to an AS boundary router, this information is not enough. A router inside an autonomous system wants to know which networks are available outside the autonomous system; the external link advertisement provides this information. The AS boundary router floods the autonomous system with the cost of each network outside the autonomous system, using a routing table created by an exterior routing protocol. Each advertisement announces one single network. If there is more than one network, separate announcements are made. Figure 21.19 depicts an external link.

Link State Database

Every router in an area receives the router link and network link LSAs from every other router and forms a **link state database.** Note that every router in the same area has the same link state database.

A link state database is a tabular representation of the topology of the internet inside an area. It shows the relationship between each router and its neighbors including the metrics.

Copyrighted material

Figure 21.19 *External link*

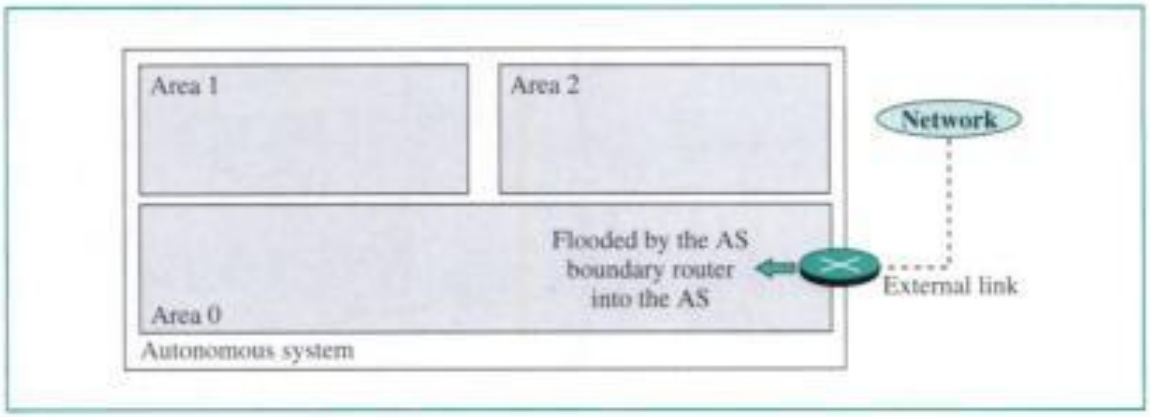

In OSPF, all routers have the same link state database.

Dijkstra Algorithm

To calculate its routing table, each router applies the Dijkstra algorithm to its link state database. The **Dijkstra algorithm** calculates the shortest path between two points on a network, using a graph made up of nodes and edges. The algorithm divides the nodes into two sets: tentative and permanent. It chooses nodes, makes them tentative, examines them, and if they pass the criteria, makes them permanent. We can informally define the algorithm using the following steps:

Dijkstra Algorithm
1. Start with the local node (router): the root of the tree.
2. Assign a cost of 0 to this node and make it the first permanent node.
3. Examine each neighbor node of the node that was the last permanent node.
4. Assign a cumulative cost to each node and make it tentative.
5. Among the list of tentative nodes
1. Find the node with the smallest cumulative cost and make it permanent.
2. If a node can be reached from more than one direction
1. Select the direction with the shortest cumulative cost.
6. Repeat steps 3 to 5 until every node becomes permanent.

Figure 21.20 shows some steps of the Dijkstra algorithm applied to node A of our sample internet in Figure 21.13. The number next to each node represents the cumulative cost from the root node. Note that if a network can be reached through two directions with two cumulative costs, the direction with the smaller cumulative cost is kept, and the other one is deleted.

Routing Table

Each router uses the shortest-path tree method to construct its routing table. The routing table shows the cost of reaching each network in the area. To find the cost of reaching

Copyrighted material

Figure 21.20 *Shortest-path calculation*

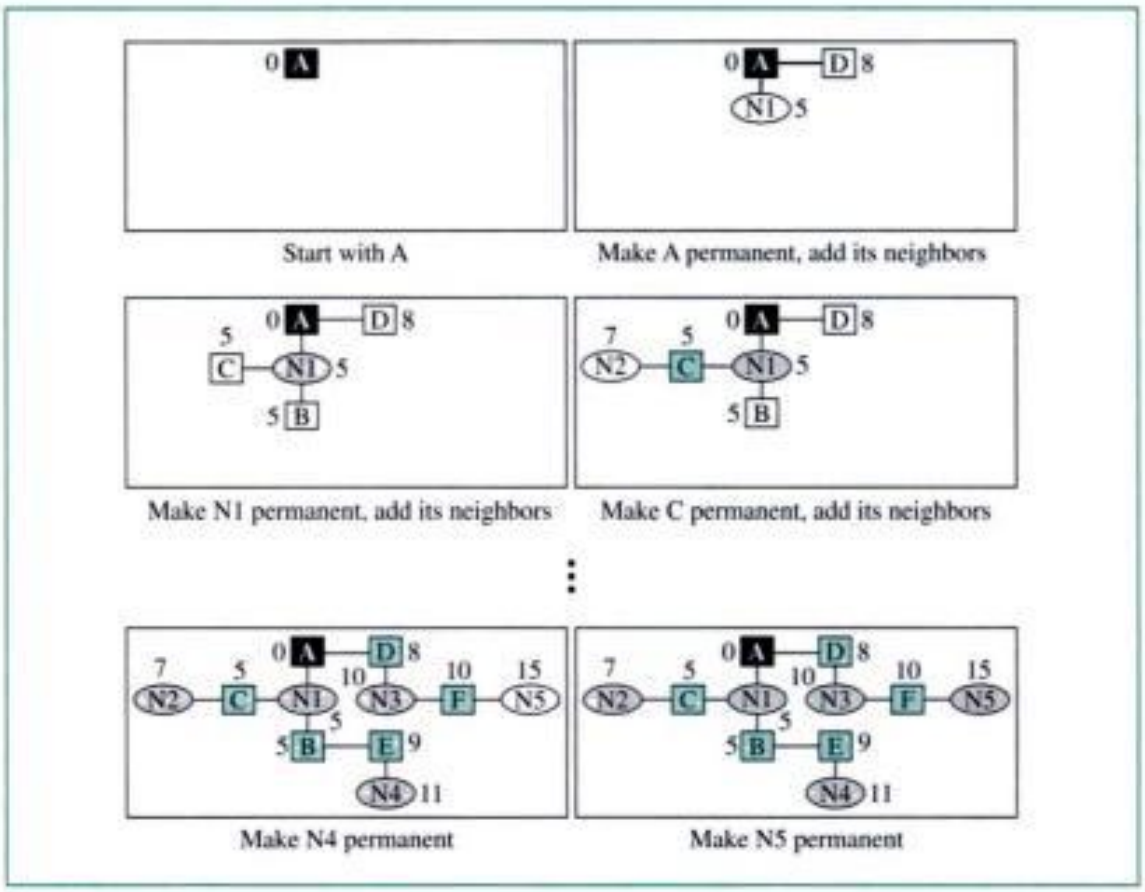

Table 21.2 *Link state routing table for router A*

Network	*Cost*	*Next Router*	*Other Information*
N1	5		
N2	7	C	
N3	10	D	
N4	11	B	
N5	15	D	

networks outside of the area, the routers use the summary link to network, the summary link to boundary router, and the external link advertisements. Table 21.2 shows the routing table for router A.

BGP

Border Gateway Protocol (BGP) is an **interautonomous system routing protocol.** It first appeared in 1989 and has gone through four versions. BGP is based on a routing method called **path vector routing.** However, before we describe the principle behind path vector routing, let us see why the two previously discussed methods—namely, distance vector routing and link state routing—are not good candidates for interautonomous system routing.

Copyrighted material

Distance vector is not a good candidate because there are occasions in which the route with the smallest hop count is not the preferred route. For example, we may not want a packet to pass through an autonomous system that is not secure, even though it is the shortest route. Also, distance vector routing is unstable due to the fact that the routers announce only the number of hop counts to the destination without actually defining the path that leads to that destination. A router that receives a distance vector advertisement packet may be fooled if the shortest path is actually calculated through the receiving router itself.

Link state routing is also not a good candidate for interautonomous system routing because an internet is usually too big for this routing method. To use link state routing for the whole internet would require each router to have a huge link state database. It would also take a long time for each router to calculate its routing table using the Dijkstra algorithm.

Path Vector Routing

Path vector routing is different from both distance vector routing and link state routing. Each entry in the routing table contains the destination network, the next router, and the path to reach the destination. The path is usually defined as an ordered list of autonomous systems that a packet should travel through to reach the destination. Table 21.3 shows an example of a path vector routing table.

Table 21.3 *Path vector routing table*

Network	*Next Router*	*Path*
N01	R01	AS14, AS23, AS67
N02	R05	AS22, AS67, AS05, AS89
N03	R06	AS67, AS89, AS09, AS34
N04	R12	AS62, AS02, AS09

Path Vector Messages

The autonomous boundary routers that participate in path vector routing advertise the reachability of the networks in their own autonomous systems to neighbor autonomous boundary routers. The concept of neighborhood here is the same as the one described in the RIP or OSPF protocol. Two autonomous boundary routers connected to the same network are neighbors.

We should mention here that an autonomous boundary router receives its information from an interior routing algorithm such as RIP or OSPF.

Each router that receives a path vector message verifies that the advertised path is in agreement with its policy (a set of rules imposed by the administrator controlling the routes). If it is, the router updates its routing table and modifies the message before sending it to the next neighbor. The modification consists of adding its AS number to the path and replacing the next router entry with its own identification.

For example, Figure 21.21 shows an internet with four autonomous systems. Router R1 sends a path vector message advertising the reachability of N1. Router R2 receives the message, updates its routing table, and after adding its autonomous system to the path and inserting itself as the next router, sends the message to router R3.

Copyrighted material

Figure 21.21 *Path vector messages*

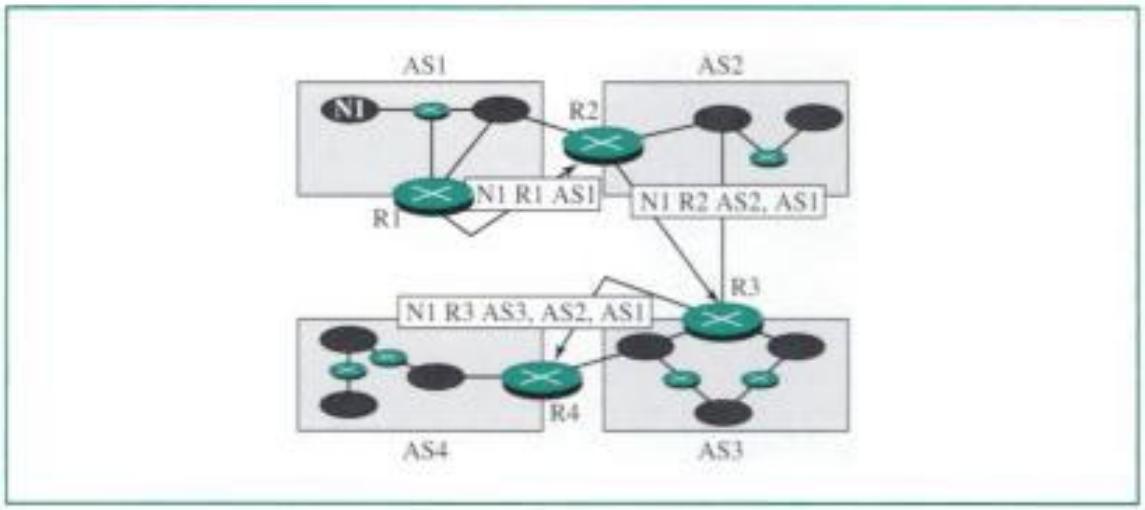

Router R3 receives the message, updates its routing table, and sends the message, after changes, to router R4.

Loop Prevention

The instability of distance vector routing and the creation of loops can be avoided in path vector routing. When a router receives a message, it checks to see if its autonomous system is in the path list to the destination. If it is, looping is involved and the message is ignored.

Policy Routing

Policy routing can be easily implemented through path vector routing. When a router receives a message, it can check the path. If one of the autonomous systems listed in the path is against its policy, the router can ignore that path and that destination. It does not update its routing table with this path, and it does not send this message to its neighbors. This means that the routing tables in path vector routing are not based on the smallest hop count or the minimum metric; they are based on the policy imposed on the router by the administrator.

Path Attributes

In our previous example, we discussed a path for a destination network. The path was presented as a list of autonomous systems, but is, in fact, a list of attributes. Each attribute gives some information about the path. The list of attributes helps the receiving router make a better decision when applying its policy.

Attributes are divided into two broad categories: well-known and optional. A *well-known attribute* is one that every BGP router should recognize. An **optional attribute** is one that need not be recognized by every router.

Well-known attributes are themselves divided into two categories: mandatory and discretionary. A **well-known mandatory attribute** is one that must appear in the description of a route. A **well-known discretionary attribute** is one that must be recognized by each router, but is not required to be included in every update message. One well-known mandatory attribute is ORIGIN. This defines the source of the routing information (RIP,

Copyrighted material

- **Type.** This 8-bit field defines the type of message, as shown in Table 21.4. The value of the type is shown in both hexadecimal and binary notation.

Table 21.4 *IGMP type field*

Type	*Value*
General or special query	0x11 or 00010001
Membership report	0x16 or 00010110
Leave report	0x17 or 00010111

- **Maximum response time.** This 8-bit field defines the amount of time in which a query must be answered. The value is in tenths of a second; for example, if the value is 100, it means 10 s. The value is nonzero in the query message; it is set to zero in the other two message types. We will see its use shortly.
- **Checksum.** This is a 16-bit field carrying the checksum. The checksum is calculated over the 8-byte message.
- **Group address.** The value of this field is 0 for a general query message. The value defines the groupid (multicast address of the group) in the special query, the membership report, and the leave report messages.

Operation

IGMP operates locally. A multicast router connected to a network has a list of multicast addresses of the groups for which the router distributes packets to groups with at least one loyal member in that network (see Fig. 21.26).

Figure 21.26 *IGMP operation*

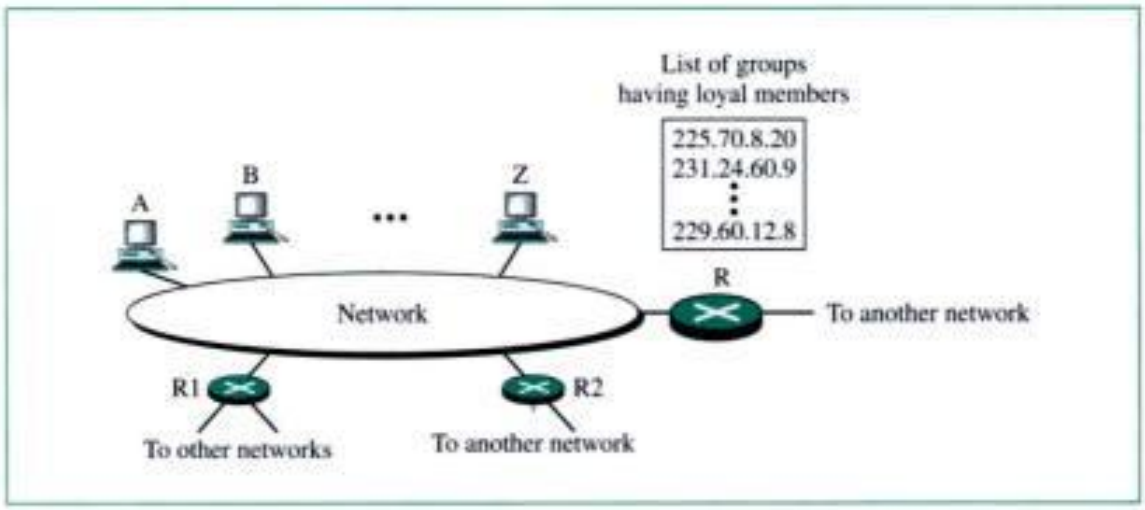

For each group, there is one router which has the duty of distributing the multicast packets destined for that group. This means that if there are three multicast routers connected to a network, their lists of groupids are mutually exclusive. For example, in the figure only router R distributes packets with the multicast address of 225.70.8.20.

Copyrighted material

A host or multicast router can have membership in a group. When a host has membership, it means that one of its processes (an application program) receives multicast packets from some group. When a router has membership, it means that a network connected to one of its other interfaces receives these multicast packets. We say that the host or the router has an *interest* in the group. In both cases, the host and the router keep a list of groupids and relay their interest to the distributing router.

For example, in Figure 21.26, router R is the distributing router. There are two other multicast routers (R1 and R2) which, depending on the group list maintained by router R, could be the recipients of router R in this network. Routers R1 and R2 may be distributors for some of these groups in other networks, but not on this network.

Joining a Group A host or a router can join a group. A host maintains a list of processes that have membership in a group. When a process wants to join a new group, it sends its request to the host. The host adds the name of the process and the name of the requested group to its list. If this is the first entry for this particular group, the host sends a membership report message. If this is not the first entry, there is no need to send the membership report since the host is already a member of the group; it already receives multicast packets for this group.

A router also maintains a list of groupids that shows membership for the networks connected to each interface. When there is new interest in a group for any of these interfaces, the router sends out a membership report. In other words, a router here acts as a host, but its group list is much broader because it is the accumulation of all loyal members that are connected to its interfaces. Note that the membership report is sent out of all interfaces except the one from which the new interest comes. Figure 21.27 shows a membership report sent by a host or a router.

Figure 21.27 *Membership report*

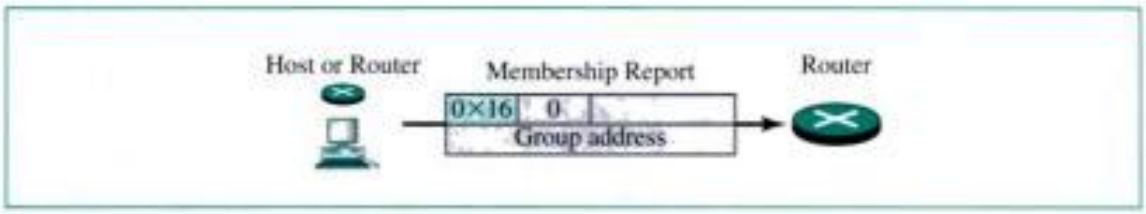

The protocol requires that the membership report be sent twice, one after the other within a few moments. In this way, if the first one is lost or damaged, the second one replaces it.

In IGMP, a membership report is sent twice, one after the other.

Leaving a Group When a host sees that no process is interested in a specific group, it sends a leave report. Similarly, when a router sees that none of the networks connected to its interfaces is interested in a specific group, it sends a leave report about that group.

However, when a multicast router receives a leave report, it cannot immediately purge that group from its list because the report comes from just one host or a router; there may be other hosts or routers that are still interested in that group. To make sure,

Copyrighted material

the router sends a special query message and inserts the groupid (multicast address) related to the group. The router allows a specified response time for any host or router. If, during this time, no interest (membership report) is received, the router assumes that there are no loyal members in the network and it purges the group from its list. Figure 21.28 shows the mechanism for leaving a group.

Figure 21.28 *Leave report*

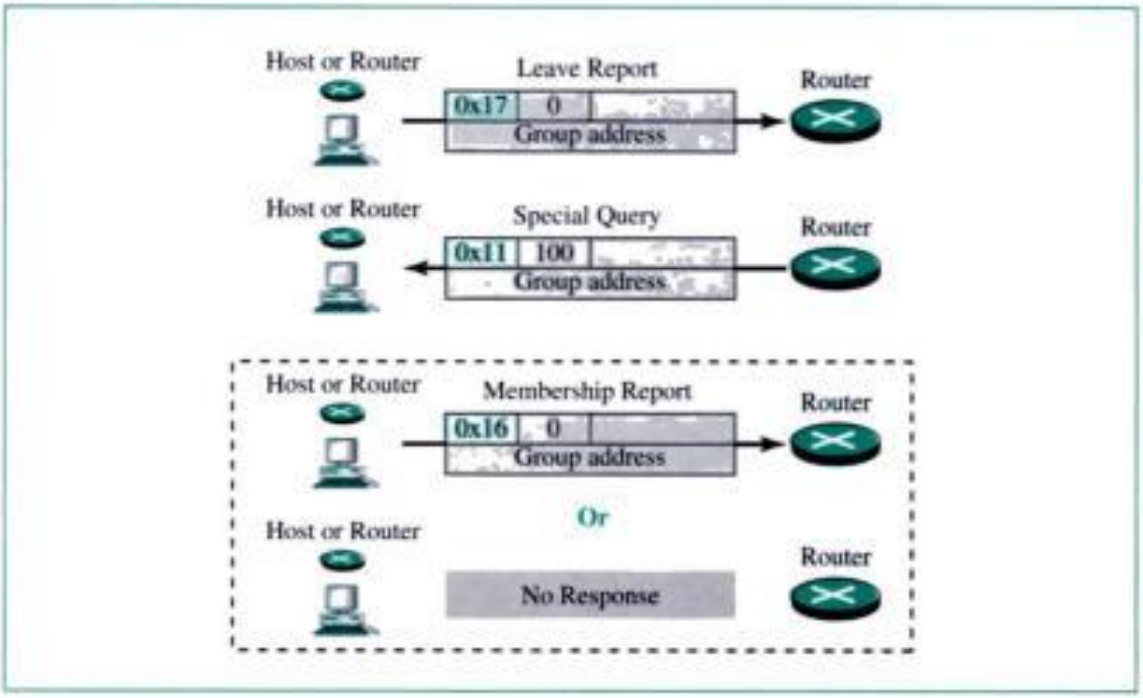

Monitoring Membership A host or router can join a group by sending a membership report message. They can leave a group by sending a leave report message. However, sending these two types of reports is not enough. Consider the situation in which there is only one host interested in a group, but the host is shut down or removed from the system. The multicast router will never receive a leave report. How is this handled? The multicast router is responsible for monitoring all the hosts or routers in a LAN to see if they want to continue their membership in a group.

The router periodically (by default, every 125 s) sends a **general query message.** In this message, the group address field is set to 0.0.0.0. This means the query for membership continuation is for all groups in which a host is involved, not just one.

The general query message does not define a particular group.

The router expects an answer for each group in its group list; even new groups may respond. The query message has a maximum response time of 10 s (the value of the field is actually 100, but this is in tenths of a second). When a host or router receives the general query message, it responds with a membership report if it is interested in a group. However, if there is a common interest (two hosts, for example, are interested in the same group), only one response is sent for that group to prevent unnecessary traffic. This is

Copyrighted material

Figure 21.31 *Logical tunneling*

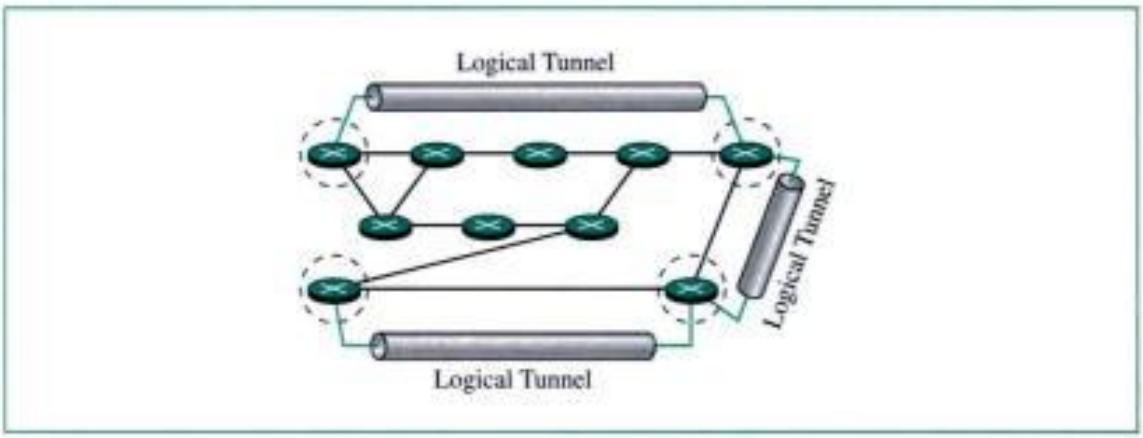

make a **multicast backbone (MBONE)** out of these isolated routers, using the concept of tunneling.

A **logical tunnel** is established by encapsulating the multicast packet inside a unicast packet. The multicast packet becomes the payload (data) of the unicast packet. The intermediate (nonmulticast) routers route the packet as unicast routers and deliver the packet from one island to another. It is as if the unicast routers do not exist and the two multicast routers are neighbors. So far the only protocol that supports MBONE and tunneling is DVMRP. Figure 21.32 shows the concept.

Figure 21.32 *MBONE*

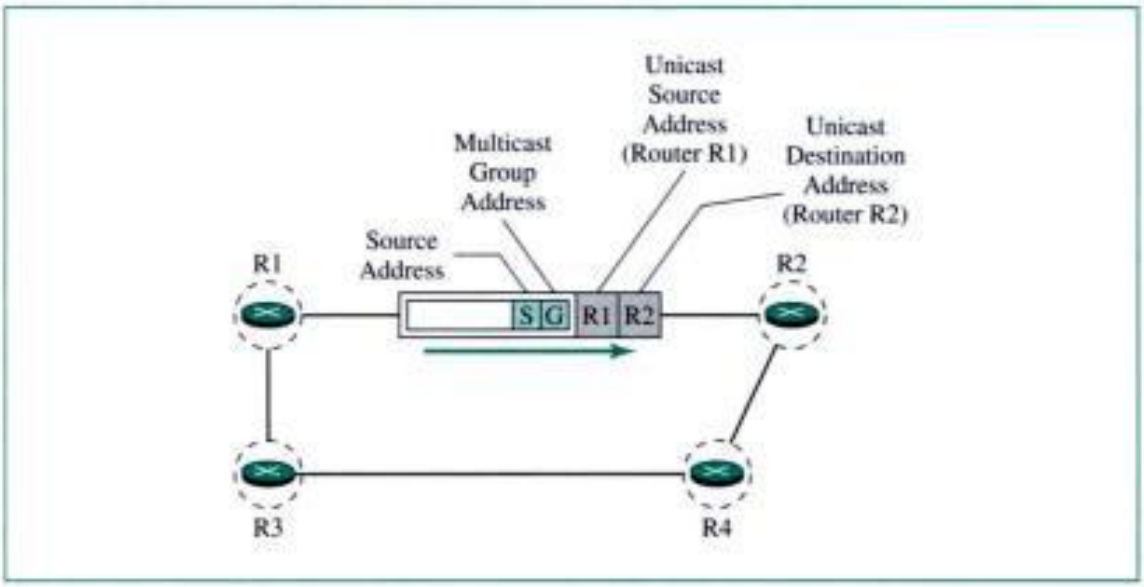

21.4 MULTICAST ROUTING PROTOCOLS

Now that we have discussed the management tool and general ideas in multicasting, let us introduce multicast routing protocols. DVMRP, MOSPF, CBT, PIM-DM, and

Copyrighted material

The new link state packets can also solve the second problem if they are sent whenever there is a change in the membership.

To solve the third problem, we can make the router calculate the least-cost trees on demand (when it receives the first multicast packet). In addition, the tree can be saved in the cache memory for future use by the same source–group pair. MOSPF is a *data-driven* protocol; the first time a MOSPF router sees a datagram with a given source and group address, the router calculates the Dijkstra shortest-path tree calculation.

CBT

The **Core-Based Tree (CBT)** protocol is a group-shared protocol that uses a core as the root of the tree. The autonomous system is divided into regions, and a core (center router or rendezvous router) is chosen for each region. The procedure for selecting a rendezvous router is complex and beyond the scope of this book.

Formation of the Tree

After the rendezvous router is selected, every router is informed of the unicast address of the selected router. Each router then sends a unicast join message to show that it wants to join the group. This message passes through all routers that are located between the sender and the **rendezvous router.** Each intermediate router extracts the necessary information from the message, such as the unicast address of the sender and the port through which the packet has arrived, and forwards the message to the next router in the path. When the rendezvous router has received all join messages from every member of the group, the tree is formed. Now every router knows its upstream router and downstream router.

If a router wants to leave the group, it sends a leave message to its upstream router. The upstream router removes the link to that router from the tree and forwards the message to the upstream router, and so on. Figure 21.38 shows a shared-group tree with rendezvous router.

Figure 21.38 *Shared-group tree with rendezvous router*

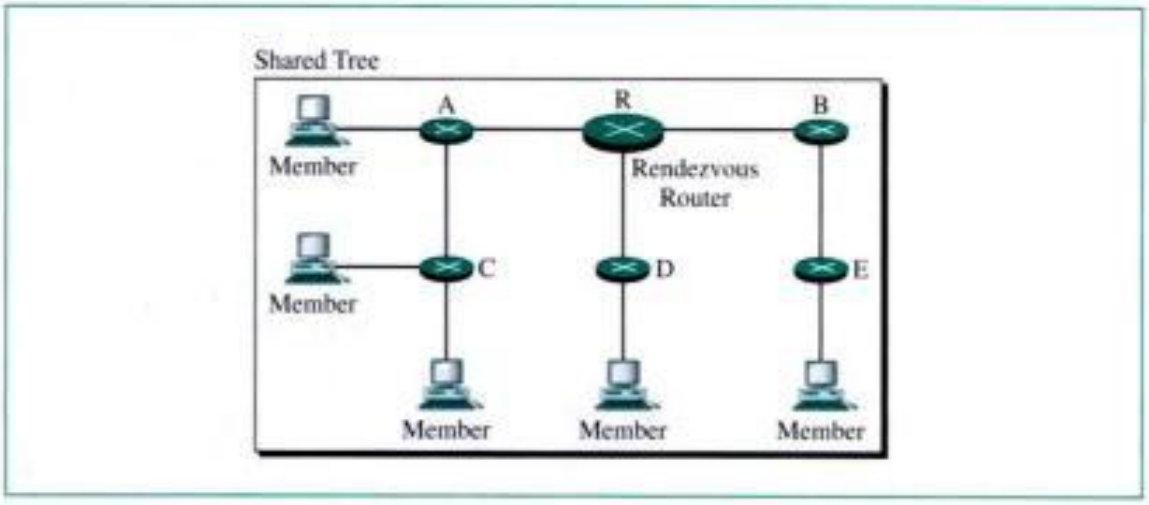

Copyrighted material

In CBT, the source sends the multicast packet to the core router. The core router decapsulates the packet and forwards it to all interested hosts.

PIM

Protocol Independent Multicast (PIM) is the name given to two independent multicast routing protocols: **Protocol Independent Multicast, Dense Mode (PIM-DM)** and **Protocol Independent Multicast, Sparse Mode (PIM-SM).** Both protocols are unicast-protocol-dependent, but the similarity ends here. We discuss each separately.

PIM-DM

PIM-DM is used when there is a possibility that each router is involved in multicasting (dense mode). In this environment, the use of a protocol that broadcasts the packet is justified because almost all routers are involved in the process.

PIM-DM is a source-based routing protocol that uses RPF and pruning/grafting strategies for multicasting. Its operation is like DVMRP; however, unlike DVMRP, it does not depend on a specific unicasting protocol. It assumes that the autonomous system is using a unicast protocol and each router has a table that can find the outgoing port that has an optimal path to a destination. This unicast protocol can be a distance vector protocol (RIP) or link state protocol (OSPF).

PIM-DM uses RPF and pruning and grafting strategies to handle multicasting. However, it is independent of the underlying unicast protocol.

PIM-SM

PIM-SM is used when there is slight possibility that each router is involved in multicasting (sparse mode). In this environment, the use of a protocol that broadcasts the packet is not justified, but a protocol such as CBT that uses a group-shared tree is more appropriate.

PIM-SM is a group-shared routing protocol that has a rendezvous point (RP) as the source of the tree. Its operation is like that of CBT; however, it is simpler because it does not require acknowledgment from a join message. In addition, it creates a backup set of RPs for each region to cover RP failures.

One of the characteristics of PIM-SM is that it can switch from a group-shared tree strategy to a source-based tree strategy when necessary. This can happen if there is a dense area of activity far from the RP. That area can be more efficiently handled with a source-based tree strategy instead of a group-shared tree strategy.

PIM-SM is similar to CBT but uses a simpler procedure.

Applications

Multicasting has many applications today such as access to distributed databases, information dissemination, distance learning, and particularly multimedia communications.

Copyrighted material

21.5 KEY TERMS

area
area border router
area identification
autonomous system (AS)
autonomous system boundary router
backbone router
Border Gateway Protocol (BGP)
Core-Based Tree (CBT)
delayed-response strategy
Dijkstra algorithm
distance vector routing
Distance Vector Multicast Routing Protocol (DVMRP)
exterior routing
external link LSA
flooding
grafting
group membership
group-shared tree
hop count
interautonomous system routing protocol
interior routing
Internet Group Management Protocol (IGMP)
keep-alive message
least-cost tree
leave report
link state advertisement (LSA)
link state database
link state routing
link state update packet
logical tunnel
membership report
metric
multicast backbone (MBONE)
Multicast Open Shortest Path First (MOSPF)
multicast router
multicast routing
multicasting
network LSA
notification message
open message
Open Shortest Path First (OSPF)
optional attribute
path vector routing
point-to-point link
policy routing
Protocol Independent Multicast (PIM)
Protocol Independent Multicast, Dense Mode (PIM-DM)
Protocol Independent Multicast, Sparse Mode (PIM-SM)
pruning
query message
rendezvous-point tree
rendezvous router
reverse path broadcasting (RPB)
reverse path forwarding (RPF)
reverse path multicasting (RPM)
router link LSA
Routing Information Protocol (RIP)
routing table
source-based tree
stub link
summary link to AS boundary router LSA
summary link to network LSA
transient link
tunneling
unicast routing
update message
virtual link
well-known attribute

21.6 SUMMARY

- A metric is the cost assigned for passage of a packet through a network.
- A router consults its routing table to determine the best path for a packet.

Copyrighted material

- An autonomous system (AS) is a group of networks and routers under the authority of a single administration.
- RIP and OSPF are popular interior routing protocols used to update routing tables in an AS.
- RIP is based on distance vector routing, in which each router shares, at regular intervals, its knowledge about the entire AS with its neighbors.
- A RIP routing table entry consists of a destination network address, the hop count to that destination, and the IP address of the next router.
- OSPF divides an AS into areas, defined as collections of networks, hosts, and routers.
- OSPF is based on link state routing, in which each router sends the state of its neighborhood to every other router in the area. A packet is sent only if there is a change in the neighborhood.
- OSPF defines four types of links (networks): point-to-point, transient, stub, and virtual.
- Five types of link state advertisements (LSAs) disperse information in OSPF: router link, network link, summary link to network, summary link to AS boundary router, and external link.
- A router compiles all the information from the LSAs it receives into a link state database. This database is common to all routers in an area.
- An LSA is a multifield entry in a link state update packet.
- BGP is an interautonomous system routing protocol used to update routing tables.
- BGP is based on a routing method called path vector routing. In this method, the ASs through which a packet must pass are explicitly listed.
- There are four types of BGP messages: open, update, keep-alive, and notification.
- The Internet Group Management Protocol (IGMP) helps multicast routers create and update a list of loyal members related to a router interface.
- The three IGMP message types are the query message, the membership report, and the leave report.
- A host or router can have membership in a group.
- A host maintains a list of processes that have membership in a group.
- A router maintains a list of groupids that shows group membership for each interface.
- Multicasting applications include distributed databases, information dissemination, teleconferencing, and distance learning.
- For efficient multicasting we use a shortest-path spanning tree to represent the communication path.
- In a source-based tree approach to multicast routing, the source–group combination determines the tree.
- In a group-shared tree approach to multicast routing, the group determines the tree.
- DVRMP is a multicast routing protocol that uses the distance routing protocol to create a source-based tree.
- In reverse path forwarding (RPF), the router forwards only the packets that have traveled the shortest path from the source to the router.

Copyrighted material

- Reverse path broadcasting (RPB) creates a shortest-path broadcast tree from the source to each destination. It guarantees that each destination receives one and only one copy of the packet.
- Reverse path multicasting (RPM) adds pruning and grafting to RPB to create a multicast shortest-path tree that supports dynamic membership changes.
- MOSPF is a multicast protocol that uses multicast link state routing to create a source-based least-cost tree.
- The Core-Based Tree (CBT) protocol is a multicast routing protocol that uses a core as the root of the tree.
- PIM-DM is a source-based routing protocol that uses RPF and pruning and grafting strategies to handle multicasting.
- PIM-SM is a group-shared routing protocol that is similar to CBT and uses a rendezvous point as the source of the tree.
- For multicasting between two noncontiguous multicast routers, we make a multicast backbone (MBONE) to enable tunneling.

21.7 PRACTICE SET

Review Questions

1. What is the difference between unicast routing and multicast routing?
2. Why would an internet need an Autonomous System?
3. What is the difference between an interior routing protocol and an exterior routing protocol? Name an example of each.
4. What kind of information is in a routing table?
5. Name the four types of OSPF connections.
6. What is the difference between a transient link and a stub link?
7. What is the purpose of a Link State Advertisement?
8. What is path vector routing?
9. What is the role of the Dijkstra algorithm in unicast routing?
10. Name the three main categories of IGMP messages and briefly discuss their functions.
11. What is the difference between a source-based tree and a group-shared tree?
12. How does reverse path forwarding differ from reverse path broadcasting?
13. What is the purpose of a multicast backbone (MBONE)?

Multiple-Choice Questions

14. RIP is based on _____.
    a. Link state routing
    b. Distance vector routing
    c. Dijkstra's algorithm
    d. Path vector routing

Copyrighted material

15. In distance vector routing each router receives information directly from _____.
    a. Every router on the network
    b. Every router less than two units away
    c. A table stored by the network hosts
    d. Its neighbors only
16. In distance vector routing a router sends out information _____.
    a. At regularly scheduled intervals
    b. Only when there is a change in its table
    c. Only when a new host is added
    d. Only when a new network is added
17. A routing table contains _____.
    a. The destination network ID
    b. The hop count to reach the network
    c. The router ID of the next hop
    d. All the above
18. Router B receives an update from router A that indicates Net1 is two hops away. The next update from A says Net1 is five hops away. What value is entered in B's routing table for Net1? Assume the basic RIP is being used.
    a. 2
    b. 3
    c. 6
    d. 7
19. If the routing table contains four new entries, how many update messages must the router send to its one neighbor router?
    a. 1
    b. 2
    c. 3
    d. 4
20. The cost field of a router's first table from itself always has a value of _____.
    a. 0
    b. 1
    c. Infinity
    d. Some positive integer
21. Dijkstra's algorithm is used to _____.
    a. Create LSAs
    b. Flood an internet with information
    c. Calculate the routing tables
    d. Create a link state database
22. An area is _____.
    a. Part of an AS
    b. Composed of at least two ASs

Copyrighted material

a. One membership report is
b. Two membership reports are
c. Three membership reports are
d. Four membership reports are

46. A one-to-all communication between a source and all hosts on a network is classified as a _____ communication.
a. Unicast
b. Multicast
c. Broadcast
d. (a) and (b)

47. A one-to-many communication between a source and a specific group of hosts is classified as a _____ communication.
a. Unicast
b. Multicast
c. Broadcast
d. (a) and (b)

48. A one-to-one communication between a source and one destination is classified as a _____ communication.
a. Unicast
b. Multicast
c. Broadcast
d. (a) and (b)

49. _____ is a multicasting application.
a. Teleconferencing
b. Distance learning
c. Information dissemination
d. All the above

50. A _____ is a data structure with nodes and edges and a hierarchical structure.
a. Tree
b. Graph
c. Leaf
d. Root

51. A system uses source-based trees for multicasting. If there are 100 sources and 5 groups, there is a maximum of _____ different trees.
a. 5
b. 20
c. 100
d. 500

52. In a _____ tree approach to multicasting, the combination of source and group determines the tree.

Copyrighted material

c. Prune
d. Plum

60. A _____ message tells an upstream router to start sending multicast messages for a specific group through a specific router.
    a. Weed
    b. Graft
    c. Prune
    d. Plum
61. _____ uses multicast link state routing concepts to create source-based trees.
    a. DVMRP
    b. MOSPF
    c. CBT
    d. BVD
62. In the _____ protocol, a multicast packet is encapsulated inside a unicast packet with the core router as the destination.
    a. DVMRP
    b. MOSPF
    c. CBT
    d. BVD
63. _____ is used in a dense multicast environment while _____ is used in a sparse multicast environment.
    a. PIM-DM; PIM-SM
    b. PIM-SM; PIM-DM
    c. PIM; PIM-DM
    d. PIM; PIM-SM
64. When a multicast router is not directly connected to another multicast router, a _____ can be formed to connect the two.
    a. Physical tunnel
    b. Logical tunnel
    c. Logical core
    d. Spanning tree

Exercises

65. What is the basis of classification for the four types of links defined by OSPF?
66. Contrast and compare distance vector routing with link state routing.
67. Draw a flowchart of the steps involved when a router receives a distance vector message from a neighbor.
68. Why do OSPF messages propagate faster than RIP messages?

Copyrighted material

69. A router has the following RIP routing table:

Net1	4	B
Net2	2	C
Net3	1	F
Net4	5	G

What would be the contents of the table if the router receives the following RIP message from router C:

Net1	2
Net2	1
Net3	3
Net4	7

70. Show the autonomous system with the following specifications:
    a. There are eight networks (N1 to N8)
    b. There are eight routers (R1 to R8)
    c. N1, N2, N3, N4, and N5 are Ethernet networks
    d. N6 is a token ring
    e. N7 and N8 are point-to-point networks
    f. R1 connects N1 and N2
    g. R2 connects N1 and N7
    h. R3 connects N2 and N8
    i. R4 connects N7 and N6
    j. R5 connects N6 and N3
    k. R6 connects N6 and N4
    l. R7 connects N6 and N5
    m. R8 connects N8 and N5
71. Draw the graphical representation of the autonomous system of Exercise 70 as seen by OSPF.
72. Which of the networks in Exercise 70 is a transient network? Which is a stub network?
73. Why is there no need for the IGMP message to travel outside its own network?
74. A multicast router list contains four groups (W, X, Y, and Z). There are three hosts on the LAN. Host A has three loyal members belonging to group W and one loyal member belonging to group X. Host B has two loyal members belonging to group W and one loyal member belonging to group Y. Host C has no processes belonging to any group. Show the IGMP messages involved in monitoring.
75. If a router has 20 entries in its group table, should it send 20 different queries periodically or just 1?
76. If a host wants to continue the membership in five groups, should it send five different membership report messages or just one?
77. A router with IP address 202.45.33.21 and physical Ethernet address 234A4512ECD2 sends an IGMP general query message. Show all the entries in the message.

Copyrighted material

78. A host with IP address 124.15.13.1 and physical Ethernet address 4A224512E1E2 sends an IGMP membership report message about groupid 228.45.23.11. Show all the entries in the message.
79. A router on an Ethernet network has received a multicast IP packet with groupid 226.17.18.4. When the host checks its multicast group table, it finds this address. Show how the router sends this packet to the recipients by encapsulating the IP packet in an Ethernet frame. Show all the entries of the Ethernet frame. The outgoing IP address of the router is 185.23.5.6, and its outgoing physical address is 4A224512E1E2. Does the router need the services of ARP?
80. A host with IP address 114.45.7.9 receives an IGMP query. When it checks its group table, it finds no entries. What action should the host take? Should it send any messages? If so, show the packet fields.
81. A host with IP address 222.5.7.19 receives an IGMP query. When it checks its routing table, it finds two entries in its table: 227.4.3.7 and 229.45.6.23. What action should the host take? Should it send any messages? If so, what type and how many? Show the fields.
82. A host with IP address 186.4.77.9 receives a request from a process to join a group with groupid 230.44.101.34. When the host checks its group table, it does not find an entry for this groupid. What action should the host take? Should it send any messages? If so, show the packet field.
83. A router with IP address 184.4.7.9 receives a report from a host that wants to join a group with groupid 232.54.10.34. When the router checks its group table, it does not find an entry for this groupid. What action should the router take? Should it send any messages? If so, show the packet fields.
84. A router sends a query and receives only three reports about groupids 225.4.6.7, 225.32.56.8, and 226.34.12.9. When it checks its routing table, it finds five entries: 225.4.6.7, 225.11.6.8, 226.34.12.9, 226.23.22.67, and 229.12.4.89. What action should be taken?
85. A router using DVMRP receives a packet with source address 10.14.17.2 from port 2. If the router forwards the packet, what are the contents of the entry related to this address in the unicast routing table?
86. Router A sends a unicast RIP update packet to router B that says 134.23.0.0/16 is 7 hops away. Network B sends an update packet to router A that says 13.23.0.0/16 is 4 hops away. If these two routers are connected to the same network, which one is the designated parent router?
87. Does RPF actually create a spanning tree? Explain.
88. Does RPB actually create a spanning tree? Explain.
89. Does RPM actually create a spanning tree? Explain.

Copyrighted material

PART 5

Transport Layer

The transport layer is the core of the Internet model. Protocols at this layer oversee the delivery of data from a process, a running application program, on one computer to a process on another computer. More importantly, they act as a liaison between the application-layer protocols and the services provided by the lower layers (network, data link, and physical). The application layer programs interact with each other, using the services of the transport layer without even being aware of the existence of the lower layers. In other words, the application layer programs are oblivious to the intricacies of the physical network and are not dependent on the physical network type. Only one set of upper layer software needs to be developed. To the application layer program, the physical networks are simply a homogeneous cloud that somehow takes data and delivers it to its destination safe and sound.

Figure 1 shows the position of the transport layer in the 5-layer Internet model. The transport layer is the fourth layer in the model. Above it is the application layer and below it is the network layer. This means that transport layer receives services from the network layer and provides services to the application layer.

Figure 1 *Position of transport layer*

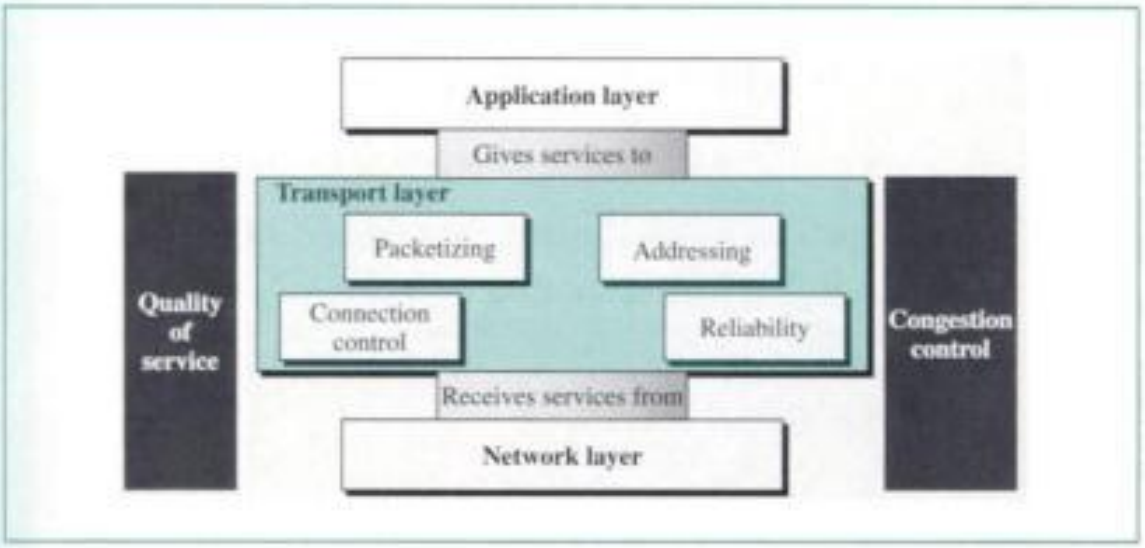

Copyrighted material

Duties

Process-to-process delivery is achieved through a set of functions performed transport layer. The most important are packetizing, connection control, addr and providing reliability as shown in Figure 2.

Figure 2 *Duties*

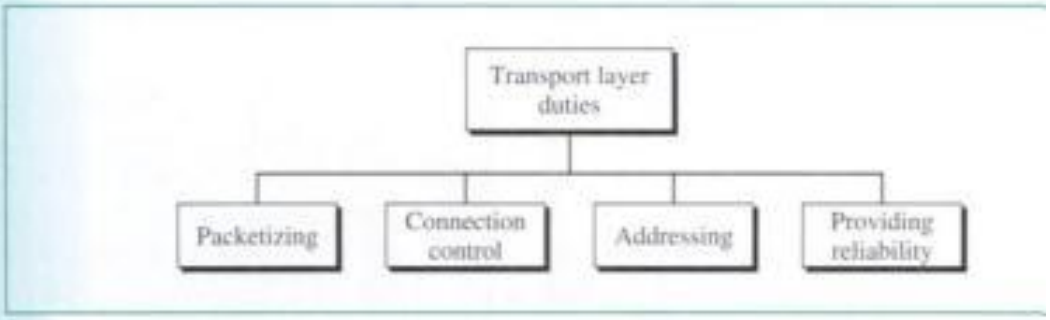

We discuss these duties in detail in Chapter 22; we give an overview below

Packetizing

The transport layer creates packets out of the message received from the app layer. Packetizing divides a long message into smaller ones; these smaller u encapsulated into the data field of the transport-layer packet and headers are ad

Dividing Large Messages The message an application program sends can length. For example, an SMTP client (email protocol) may send a short messag eral lines) or a long message with several attachments and multimedia docum long message may be larger than the maximum size that can be handled by the layer protocols. For example, some network layers can handle packets with onl thousand characters or less. This means that long messages from the applicatio must be divided into sections with each section inserted (encapsulated) into a s packet. This is similar to what happens using snail mail. If we have a letter wit pages and we only have standard size envelopes, we need to separate the letter a multiple envelopes addressed to the same destination.

Adding a Header Even if the message arriving from the application layer i enough to be handled by the network layer, the transport layer still inserts (e lates) the data into a transport-layer packet. A header is added to allow the tr layer to perform its other functions.

Connection Control

Transport-layer protocols today are divided into two categories: connection-o and connectionless.

Connection-Oriented Delivery A connection-oriented transport layer proto establishes a connection (a virtual path) between the sender and receiver. The tion is virtual; that is, the application layer perceives that a single path has been

Copyrighted material

The server process must also define itself with a port number. This port number, however, cannot be chosen randomly. If the computer at the server site runs a server process and assigns a random number as the port number, the process at the client site that wants to access that server and use its services will not know the port number. Of course, one solution would be to send a special packet and request the port number of a specific server, but this requires more overhead. The Internet has decided to use universal port numbers for servers; these are called **well-known port numbers.** There are some exceptions to this rule; for example, there are clients that are assigned well-known port numbers. Every client process knows the well-known port number of the corresponding server process. For example, while the Daytime client process, discussed above, can use an ephemeral (temporary) port number 52,000 to identify itself, the Daytime server process must use the well-known (permanent) port number 13. Figure 22.2 shows this concept.

Figure 22.2 *Port numbers*

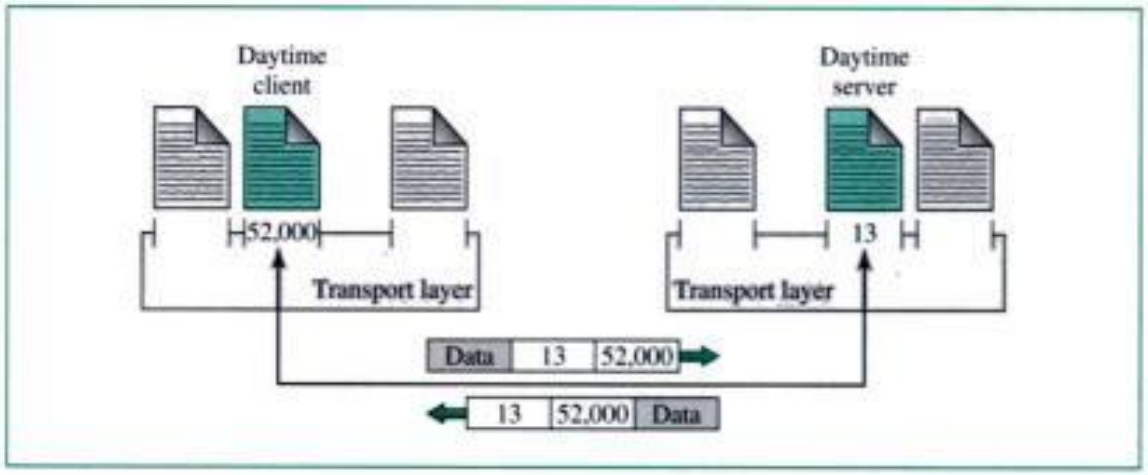

It should be clear by now that the IP addresses and port numbers play different roles in selecting the final destination of data. The destination IP address defines the host among the different hosts in the world. After the host has been selected, the port number defines one of the processes on this particular host (see Fig. 22.3).

IANA Ranges

The IANA (Internet Assigned Number Authority) has divided the port numbers into three ranges: well-known, registered, and dynamic (or private), as shown in Figure 22.4.

- **Well-known ports.** The ports ranging from 0 to 1023 are assigned and controlled by IANA. These are the well-known ports.
- **Registered ports.** The ports ranging from 1024 to 49,151 are not assigned or controlled by IANA. They can only be registered with IANA to prevent duplication.
- **Dynamic ports.** The ports ranging from 49,152 to 65,535 are neither controlled nor registered. They can be used by any process. These are the ephemeral ports.

Copyrighted material

either. We will see shortly that one of the transport-layer protocols in the Ir model, UDP, is connectionless.

Connection-Oriented Service

In a **connection-oriented service,** a connection is first established between the and the receiver. Data are transferred. At the end, the connection is released. W see shortly that TCP is a connection-oriented protocol.

Connection Establishment Connection establishment involves the following:

1. Host A sends a packet to announce its wish for connection and includes its ization information about traffic from A to B.
2. Host B sends a packet to acknowledge (confirm) the request of A.
3. Host B sends a packet that includes its initialization information about traffi B to A.
4. Host A sends a packet to acknowledge (confirm) the request of B.

This connection establishment implies four steps. However, since steps 2 and occur at the same time, they can be combined into one step. That is, host B can c the request of host A and send its own request at the same time. Figure 22.7 sho situation.

Figure 22.7 *Connection establishment*

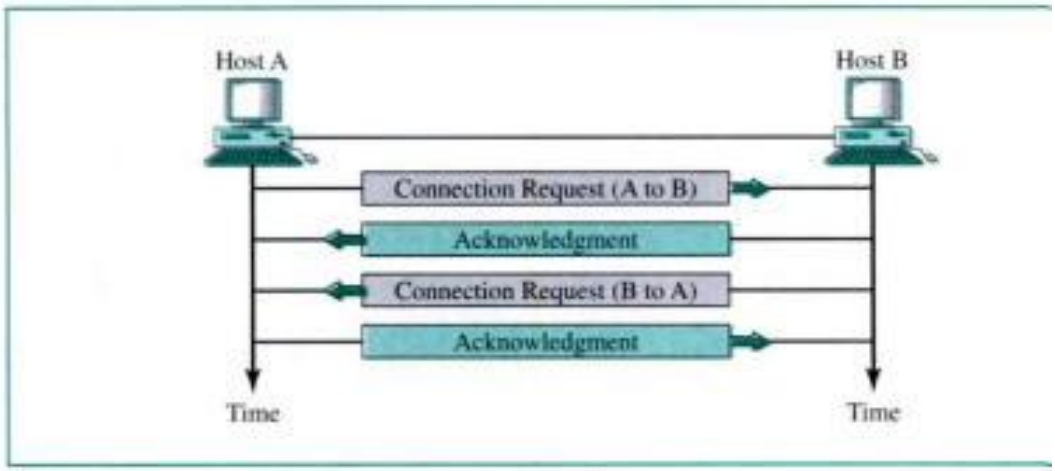

Although the above process seems very simple, we need to elaborate on it.

- Each connection request needs to have a sequence number to recover from tl or duplication of the packet. Also each acknowledgment needs to have ar acknowledgment number for the same reason.
- The first sequence number in each direction must be random for each conne established. In other words, a sender cannot create several connections that with the same sequence number (for example, 1). The reason is to preven situation called **playback.** A classic example is a bank transaction. A bank cus makes a connection and requests a transfer of $1 million to a third party. If network somehow duplicates the transaction after the first connection is close

Copyrighted material

bank may assume that this is a new connection and transfer another $1 million to the third party. This would probably not happen if the protocol required that the sender use a different sequence number each time it made a new connection. The bank would recognize a repeated sequence number and know that the request was a duplicate.

- Using a sequence number for each connection requires that the receiver keep a history of sequence numbers for each remote host for a specified time.

Connection Termination Any of the two parties involved in exchanging data can close the connection. When connection in one direction is terminated, the other party can continue sending data in the other direction. Therefore, four actions are needed to close the connections in both directions:

1. Host A sends a packet announcing its wish for connection termination.
2. Host B sends a segment acknowledging (confirming) the request of A. After this, the connection is closed in one direction, but not in the other. Host B can continue sending data to A.
3. When host B has finished sending its own data, it sends a segment to indicate that it wants to close the connection.
4. Host A acknowledges (confirms) the request of B.

The four-step connection termination cannot be reduced to three steps because the two parties may not wish to terminate at the same time. In other words, connection termination is asymmetric. Figure 22.8 shows the situation.

Figure 22.8 *Connection termination*

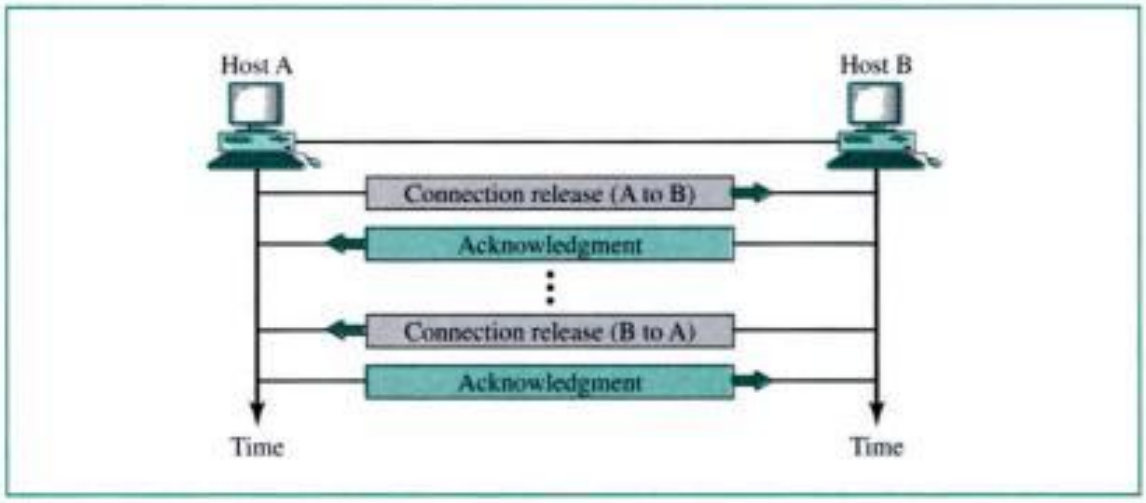

The question that often comes to the mind is, How can we make a connection-oriented transport-layer protocol over a connectionless network-layer protocol such as IP? The answer is that, according to the design goal of the Internet model, the two layers are totally independent. The transport layer only uses the services of network layer. Let us give an analogy. The post office service is connectionless. Each parcel delivered to the post office is independent from the next even if we deliver 100 parcels to the same destination. The post office cannot guarantee that the parcels arrive at the destination in

Copyrighted material

order even if the parcels are numbered. But we can create a connection-oriented service on top of this service. We can have an agent at the destination city and send the numbered parcels to her. The agent can keep the parcels until all have arrived, put them in order, and deliver them to the destination. If a parcel is lost, the agent can ask for a duplicate. We can create a connection with our agent by telephone, for example, when the parcels are ready to be delivered to the post office and get her confirmation. After all parcels have been received, we can call again to announce the disconnection of service.

Reliable versus Unreliable

The transport-layer service can be reliable or unreliable. If the application-layer program needs reliability, we use a reliable transport-layer protocol by implementing flow and error control at the transport layer. This means a slower and more complex service. On the other hand, if the application program does not need reliability because it uses its own flow and error control mechanism or it needs fast service or the nature of the service does not demand flow and error control (real-time applications), then an unreliable protocol can be used.

In the Internet, there are two different transport-layer protocols, as we have already mentioned. UDP is connectionless and unreliable; TCP is connection-oriented and reliable. These two can respond to the demands of the application-layer programs.

One question often comes to the mind. If the data link layer is reliable and has flow and error control, do we need this at the transport layer, too? The answer is yes. Reliability at the data link layer is between two nodes; we need reliability between two ends. Because the network layer in the Internet is unreliable (best-effort delivery), we need to implement reliability at the transport layer. To understand that error control at the data link layer does not guarantee error control at the transport layer, let us look at Figure 22.9.

Figure 22.9 *Error control*

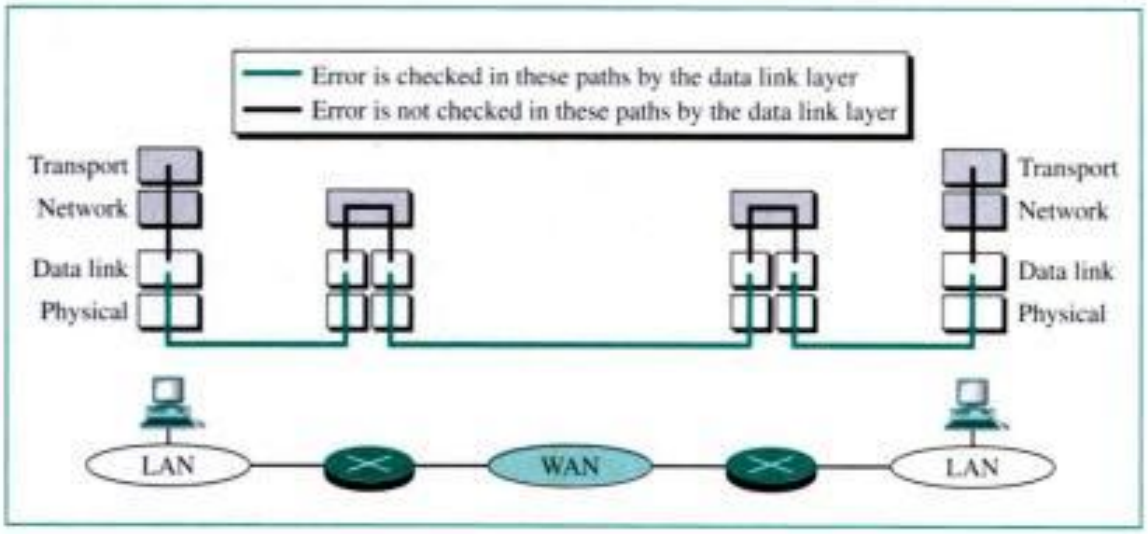

As we will see, flow and error control in TCP is implemented by the sliding window protocol, as discussed in Chapter 11. The window, however, is character-oriented, instead of frame oriented.

Copyrighted material

- UDP is used in conjunction with the Real Time Transport Protocol (RTP) to provide a transport-layer mechanism for real-time data (see Chapter 28).

UDP is a convenient transport-layer protocol for applications that provide flow and error control. It is also used by multimedia applications.

22.3 TRANSMISSION CONTROL PROTOCOL (TCP)

The reliable, but complex transport-layer protocol in the Internet is called **Transmission Control Protocol (TCP).** TCP is called a *stream connection-oriented* and *reliable* transport protocol. It adds connection-oriented and reliability features to the services of IP.

Port Numbers

Like UDP, TCP uses port numbers as transport-layer addresses. Table 22.2 lists some well-known port numbers used by TCP. Note that if an application can use both UDP and TCP, the same port number is assigned to this application.

Table 22.2 *Well-known ports used by TCP*

Port	*Protocol*	*Description*
7	Echo	Echoes a received datagram back to the sender
9	Discard	Discards any datagram that is received
11	Users	Active users
13	Daytime	Returns the date and the time
17	Quote	Returns a quote of the day
19	Chargen	Returns a string of characters
20	FTP, Data	File Transfer Protocol (data connection)
21	FTP, Control	File Transfer Protocol (control connection)
23	TELNET	Terminal Network
25	SMTP	Simple Mail Transfer Protocol
53	DNS	Domain Name Server
67	BOOTP	Bootstrap Protocol
79	Finger	Finger
80	HTTP	Hypertext Transfer Protocol
111	RPC	Remote Procedure Call

TCP Services

Let us explain the services offered by TCP to the processes at the application layer.

Copyrighted material

For simplicity, we have shown two buffers of 20 bytes each; normally the buffers are hundreds or thousands of bytes, depending on the implementation. We also show the buffers as the same size, which is not always the case.

The figure shows the movement of the data in one direction. At the sending site, the buffer has three types of locations. The white section contains empty locations that can be filled by the sending process (producer). The gray area holds bytes that have been sent but not yet acknowledged. TCP keeps these bytes in the buffer until it receives an acknowledgment. The colored areas are bytes to be sent by the sending TCP. However, as we will see later in this chapter, TCP may be able to send only part of this colored section. This could be due to the slowness of the receiving process or perhaps congestion in the network. Also note that after the bytes in the gray locations are acknowledged, the location is recycled and available for use by the sending process. This is why we show a circular buffer.

The operation of the buffer at the receiver site is simpler. The circular buffer is divided into two areas (shown as white and colored). The white area contains empty locations to be filled by bytes received from the network. The colored sections contain received bytes that can be consumed by the receiving process. When a byte is consumed by the receiving process, the location is recycled and added to the pool of empty locations.

Bytes and Segments

Although buffering handles the disparity between the speed of the producing and consuming processes, we need one more step before we can send data. The IP layer, as a service provider for TCP, needs to send data in packets, not as a stream of bytes. At the transport layer, TCP groups a number of bytes together into a packet called a **segment.** TCP adds a header to each segment (for control purposes) and delivers the segment to the IP layer for transmission. The segments are encapsulated in an IP datagram and transmitted. This entire operation is transparent to the receiving process. Later we will see that segments may be received out of order, lost, or corrupted and resent. All these are handled by TCP with the receiving process unaware of any activities. Figure 22.13 shows how segments are created from the bytes in the buffers.

Figure 22.13 *TCP segments*

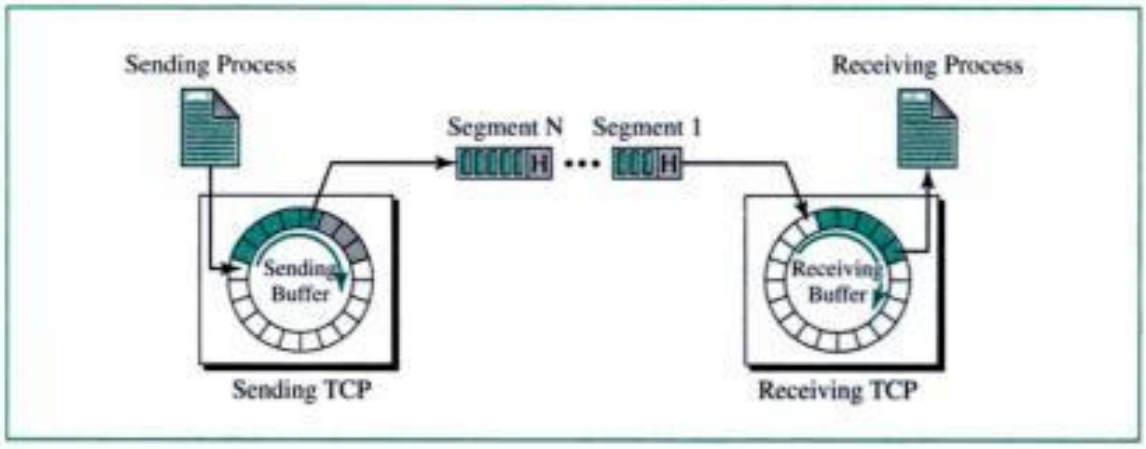

Copyrighted material

The bytes of data being transferred in each connection are numbered by TCP. The numbering starts with a randomly generated number.

Sequence Number

After the bytes have been numbered, TCP assigns a sequence number to each segment that is being sent. The sequence number for each segment is the number of the first byte carried in that segment.

Example 1

Imagine a TCP connection is transferring a file of 6000 bytes. The first byte is numbered 10010. What are the sequence numbers for each segment if data are sent in five segments with the first four segments carrying 1000 bytes and the last segment carrying 2000 bytes?

Solution

The following shows the sequence number for each segment:

Segment 1 → sequence number: 10,010 (range: 10,010 to 11,009)
Segment 2 → sequence number: 11,010 (range: 11,010 to 12,009)
Segment 3 → sequence number: 12,010 (range: 12,010 to 13,009)
Segment 4 → sequence number: 13,010 (range: 13,010 to 14,009)
Segment 5 → sequence number: 14,010 (range: 14,010 to 16,009)

The value of the sequence number field in a segment defines the number of the first data byte contained in that segment.

Acknowledgment Number

As we discussed before, communication in TCP is full-duplex; when a connection is established, both parties can send and receive data at the same time. Each party numbers the bytes, usually with a different starting byte number. The sequence number in each direction shows the number of the first byte carried by the segment. Each party also uses an acknowledgment number to confirm the bytes it has received. However, the acknowledgment number defines the number of the next byte that the party expects to receive. In addition, the acknowledgment number is cumulative, which means that the receiver takes the number of the last byte that it has received, safe and sound, adds 1 to it, and announces this sum as the acknowledgment number. The term *cumulative* here means that if a party uses 5643 as an acknowledgment number, it has received all bytes from the beginning up to 5642. Note that this does not mean that the party has received 5642 bytes because the first byte number does not normally start from 0.

The value of the acknowledgment field in a segment defines the number of the next byte a party expects to receive. The acknowledgment number is cumulative.

Copyrighted material

Connection Termination

Any of the two parties involved in exchanging data (client or server) can close the connection. When connection in one direction is terminated, the other party can continue sending data in the other direction. Therefore, four steps are needed to close the connections in both directions, as shown in Figure 22.17.

Figure 22.17 *Four-step connection termination*

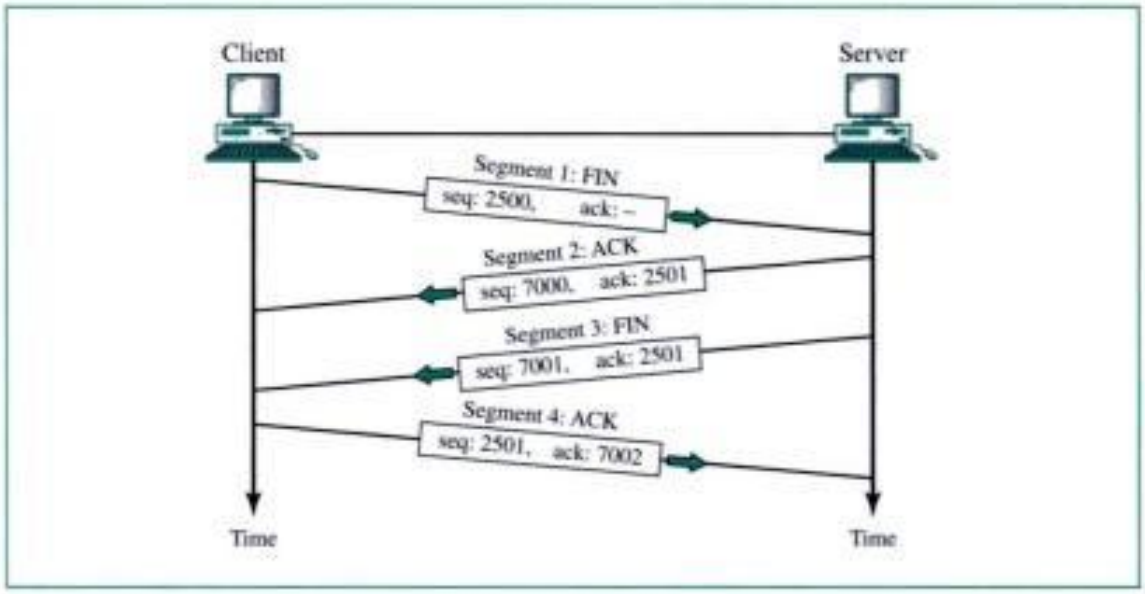

The four steps are as follows:

1. The client TCP sends the first segment, a FIN segment.
2. The server TCP sends the second segment, an ACK segment, to confirm the receipt of the FIN segment from the client. Note that the acknowledgment number is 1 plus the sequence number received in the FIN segment because no user data have been sent in segment 1.
3. The server TCP can continue sending data in the server-client direction. When it does not have any more data to send, it sends the third segment. This segment is a FIN segment.
4. The client TCP sends the fourth segment, an ACK segment, to confirm the receipt of the FIN segment from the TCP server. Note that the acknowledgment number is 1 plus the sequence number received in the FIN segment from the server.

Connection Resetting

TCP may request the resetting of a connection. *Resetting* here means that the current connection is destroyed. This happens in one of three cases:

1. The TCP on one side has requested a connection to a nonexistent port. The TCP on the other side may send a segment with its RST bit set to annul the request.
2. One TCP may want to abort the connection due to an abnormal situation. It can send an RST segment to close the connection.

Copyrighted material

3. The TCP on one side may discover that the TCP on the other side has been idle for a long time. It may send an RST segment to destroy the connection.

State Transition Diagram

To keep track of all the different events happening during connection establishment, connection termination, and data transfer, the TCP software is implemented as a finite state machine. A **finite state machine** is a machine that goes through a limited number of states. At any moment, the machine is in one of the states. It remains in that state until an event happens. The event can take the machine to a new state, or the event can make the machine perform some actions. In other words, the event is an input applied to a state. It can change the state and can also create an output. Table 22.4 shows the states for TCP.

Table 22.4 *States for TCP*

State	*Description*
CLOSED	There is no connection.
LISTEN	The server is waiting for calls from the client.
SYN-SENT	A connection request is sent; waiting for acknowledgment.
SYN-RCVD	A connection request is received.
ESTABLISHED	Connection is established.
FIN-WAIT-1	The application has requested the closing of the connection.
FIN-WAIT-2	The other side has accepted the closing of the connection.
TIME-WAIT	Waiting for retransmitted segments to die.
CLOSE-WAIT	The server is waiting for the application to close.
LAST-ACK	The server is waiting for the last acknowledgment.

To illustrate the concept we use a **state transition diagram.** The states are shown using ovals. The transition from one state to another is shown using the directed lines. Each line has two strings separated by a slash. The first string is the input, what TCP receives. The second is the output, what TCP sends. Figure 22.18 shows the state transition diagram for both client and server. The dotted lines of the figure represent the server, the solid lines represent the client. The diagram is more complex than what is shown in the figure.

Client Diagram

The client can be in one of the following states: CLOSED, SYN-SENT, ESTABLISHED, FIN-WAIT-1, FIN-WAIT-2, and TIME-WAIT.

- The client TCP starts in the CLOSED state.
- While in this state, the client TCP can receive an active open request from the client application program. It sends a SYN segment to the server TCP and goes to the SYN-SENT state.

Copyrighted material

Figure 22.18 *State transition diagram*

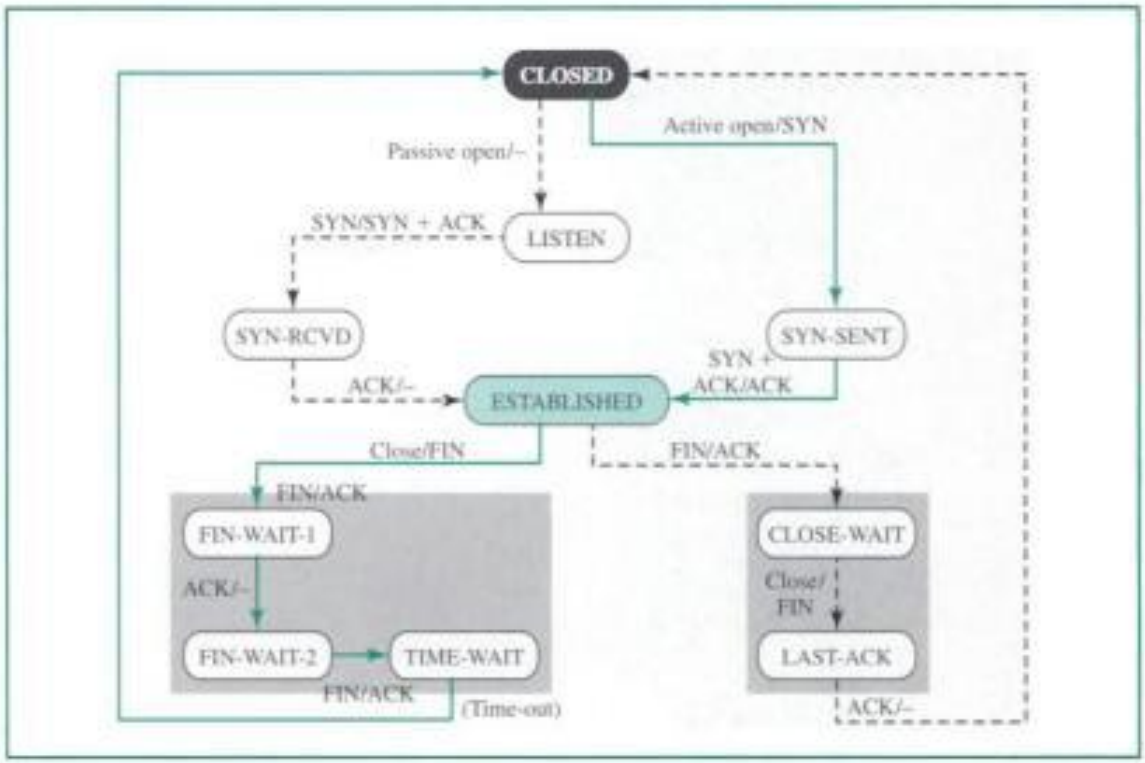

- While in this state, the client TCP can receive a SYN + ACK segment from the other TCP. It sends an ACK segment to the other TCP and goes to the ESTABLISHED state. This is the data transfer state. The client remains in this state as long as it is sending and receiving data.
- While in this state, the client TCP can receive a close request from the client application program. It sends a FIN segment to the other TCP and goes to the FIN-WAIT-1 state.
- While in this state, the client TCP waits to receive an ACK from the server TCP. When the ACK is received, it goes to the FIN-WAIT-2 state. It does not send anything. Now the connection is closed in one direction.
- The client remains in this state, waiting for the server to close the connection from the other end. If the client receives a FIN segment from the other end, it sends an ACK segment and goes to the TIME-WAIT state.
- When the client is in this state, it starts a timer and waits until this timer goes off. The value of this timer is set to double the lifetime estimate of a segment of maximum size. The client remains in the state before totally closing to let all duplicate packets, if any, arrive at their destination to be discarded. After the time-out, the client goes to the CLOSED state, where it began.

Server Diagram

Although the server can be in any one of the 11 states, in normal operation it is in one of the following states: CLOSED, LISTEN, SYN-RCVD, ESTABLISHED, CLOSE-WAIT, and LAST-ACK.

Copyrighted material

- The server TCP starts in the CLOSED state.
- While in this state, the server TCP can receive a passive open request from the server application program. It goes to the LISTEN state.
- While in this state, the server TCP can receive a SYN segment from the client TCP. It sends a SYN + ACK segment to the client TCP and then goes to the SYN-RCVD state.
- While in this state, the server TCP can receive an ACK segment from the client TCP. It goes to the ESTABLISHED state. This is the data transfer state. The server remains in this state as long as it is receiving and sending data.
- While in this state, the server TCP can receive a FIN segment from the client, which means that the client wishes to close the connection. It can send an ACK segment to the client and goes to the CLOSE-WAIT state.
- While in this state, the server waits until it receives a close request from the server program. It then sends a FIN segment to the client and goes to the LAST-ACK state.
- While in this state, the server waits for the last ACK segment. It then goes to the CLOSED state.

Flow Control

Flow control defines the amount of data a source can send before receiving an acknowledgment from the destination. In an extreme case, a transport-layer protocol could send 1 byte of data and wait for an acknowledgment before sending the next byte. But this would be an extremely slow process. If the data are traveling a long distance, the source is idle while it waits for an acknowledgment.

At the other extreme, a transport-layer protocol can send all the data it has without worrying about acknowledgment. This speeds up the process, but it may overwhelm the receiver. Besides, if some part of the data is lost, duplicated, received out of order, or corrupted, the source will not know until all data have been checked by the destination.

TCP has a solution that stands somewhere in between. It defines a window that is imposed on the buffer of data delivered from the application program and is ready to be sent. TCP sends as many data as are defined by the sliding window protocol.

Sliding Window Protocol

To accomplish flow control, TCP uses a sliding window protocol. With this method, both hosts use a window for each connection. The window spans a portion of the buffer containing bytes that a host can send before worrying about an acknowledgment from the other host. The window is called a **sliding window** because it can slide over the buffer as data and acknowledgments are sent and received.

A sliding window is used to make transmission more efficient as well as to control the flow of data so that the destination does not become overwhelmed with data. TCP's sliding windows are byte-oriented.

Copyrighted material

Figure 22.19 shows the sender buffer in Figure 22.12. However, instead of a circular buffer, we have shown a flat buffer for simplicity. Note that if we connect the two ends of the buffer, we get the circular buffer.

Figure 22.19 *Sender buffer*

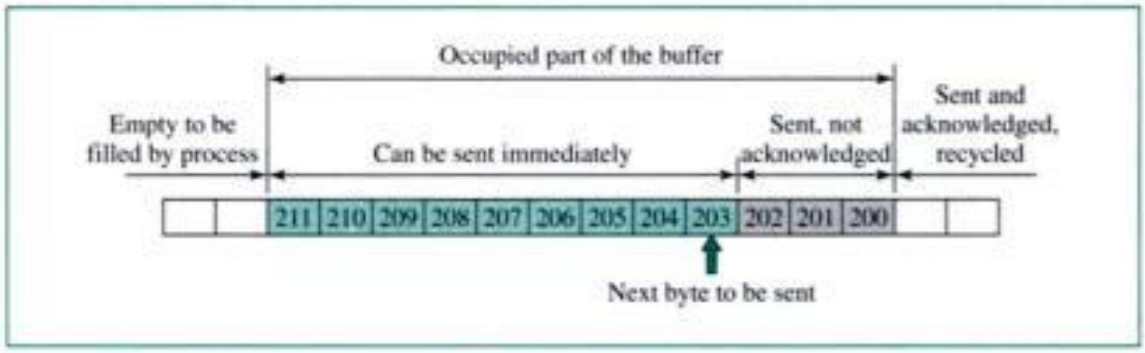

In Figure 22.19 the bytes before 200 have been sent and acknowledged. The sender can reuse these locations. Bytes 200 to 202 have been sent, but not acknowledged. The sender has to keep these bytes in the buffer in case they are lost or damaged. Bytes 203 to 211 are in the buffer (produced by the process) but have not yet been sent.

Let's examine the situation in which there is no sliding window protocol. In this case, the sender can go ahead and send all the bytes (up to 211) in its buffer, without regard to the condition of the receiver. The receiver's buffer, with its limited size, could completely fill up because the receiving process is not consuming data fast enough. The excess bytes discarded by the receiver will require retransmission. The sender must adjust itself to the number of locations available at the receiver site.

Receiver Window

Figure 22.20 shows the receiver buffer. Note that the next byte to be consumed by the process is byte 194. The receiver expects to receive byte 200 from the sender (which has been sent but not received). How many more bytes can the receiver store? If the total size of the receiving buffer is N and M locations are already occupied, then only $N - M$ more bytes can be received. This value is called the **receiver window.** For example, if $N = 13$ and $M = 6$, this means that the value of the receiver window is 7.

Figure 22.20 *Receiver window*

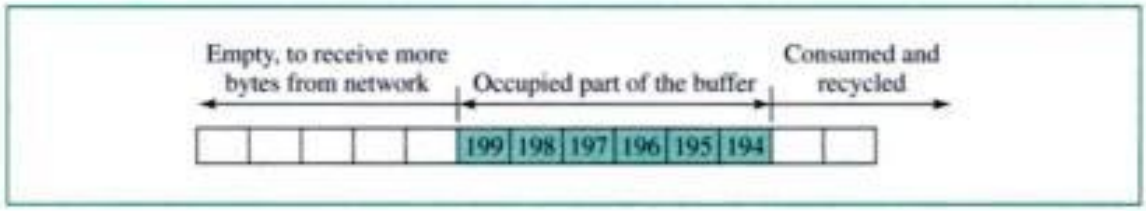

Copyrighted material

Sender Window

We have flow control if the sender creates a window—the **sender window**—with a size less than or equal to the size of the receiver window. This window includes the bytes sent and not acknowledged and those that can be sent. Figure 22.21 shows the sender buffer with the sender window.

Figure 22.21 *Sender buffer and sender window*

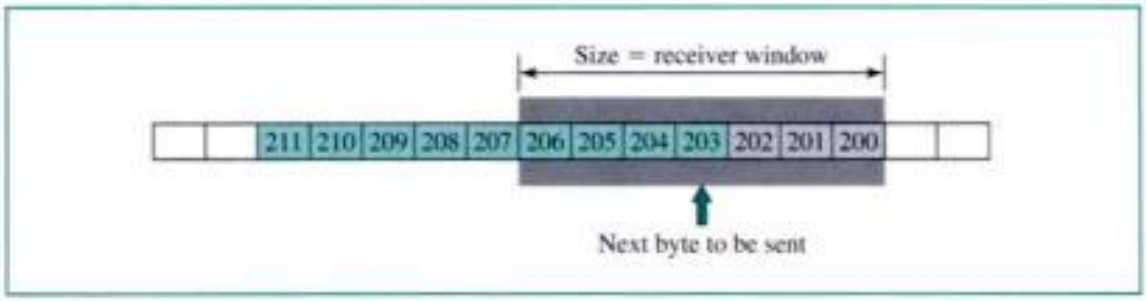

Note that the size of the sender window is equal to the size of the receiver window (7 in our example). However, this does not mean that the sender can send 7 more bytes; it can send only 4 more bytes because it has already sent 3 bytes. Note also that although bytes 207 to 211 are in the sending buffer, they also cannot be sent until more news arrives from the receiver.

Sliding the Sender Window

Let's see how messages from the receiver change the position of the sender window. In our example, suppose the sender sends 2 more bytes and an acknowledgment is received from the receiver (expecting byte 203) with no change in the size of the receiver window (still 7). The sender can now slide its window, and the locations occupied by bytes 200 to 202 can be recycled. Figure 22.22 shows the position of the sender buffer and the sender window before and after this event. In part b of the figure, the sender can now send bytes 205 to 209 (5 more bytes).

Figure 22.22 *Sliding the sender window*

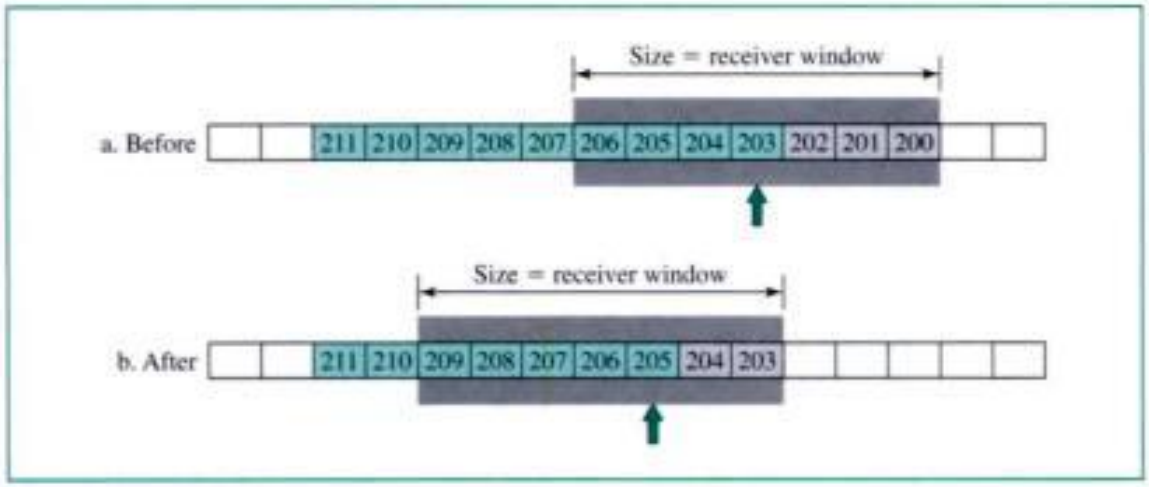

Copyrighted material

Expanding the Sender Window

If the receiving process consumes data faster than it receives, the size of the receiver window expands (the buffer has more free locations). This situation can be relayed to the sender, resulting in the increase (expansion) of the window size. In Figure 22.23, the receiver has acknowledged the receipt of 2 more bytes (expecting byte 205) and at the same time has increased the value of the receiver window to 10. In the meantime, the sending process has created 4 more bytes, and the sending TCP has sent 5 bytes.

Figure 22.23 *Expanding the sender window*

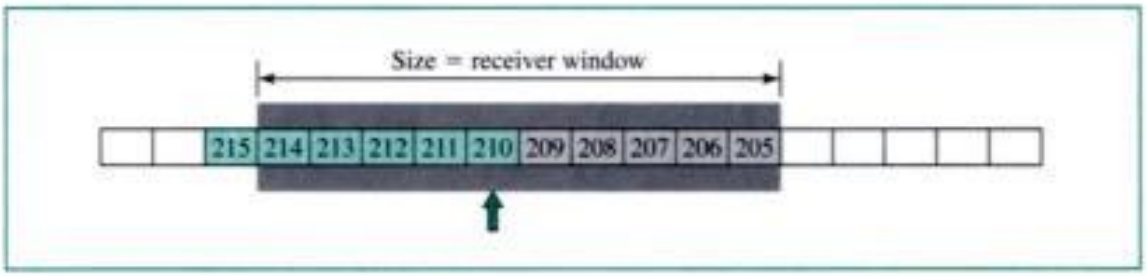

Shrinking the Sender Window

If the receiving process consumes data more slowly than it receives data, the size of the receiver window decreases (shrinks). In this case the receiver has to inform the sender to shrink its sender window size. In Figure 22.24, the receiver has received the 5 bytes (205 to 209); however, the receiving process has consumed only 1 byte, which means the number of free locations is reduced to 6 (10 − 5 + 1). It acknowledges bytes 205 to 209 (expecting 210), but also informs the sender to shrink its window size and not to send more than 6 more bytes. If the sender has already sent 2 more bytes when it receives the news and has received 3 more bytes from the sending process, we get the window and buffer as shown in Figure 22.24.

Figure 22.24 *Shrinking the sender window*

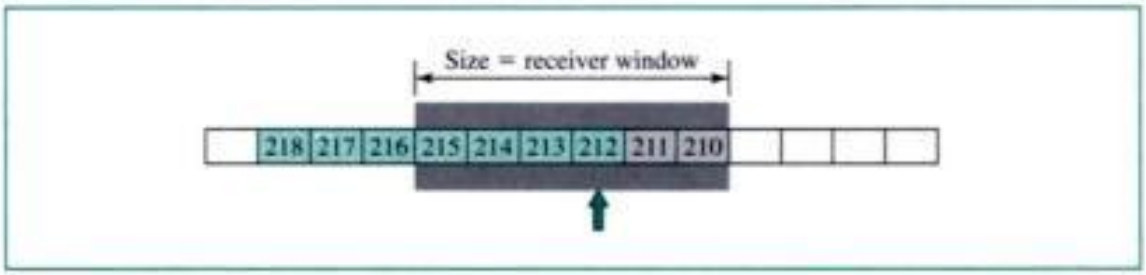

Closing the Sender Window

What happens if the receiver buffer is totally full? In this case, the receiver window value is zero. When this is relayed to the sender, the sender closes its window (left and right walls overlap). The sender cannot send any bytes until the receiver announces a nonzero receiver window value. We discuss this issue again when we talk about TCP timers.

Copyrighted material

In TCP, the sender window size is totally controlled by the receiver window value (the number of empty locations in the receiver buffer). However, the actual window size can be smaller if there is congestion in the network.

Some points about TCP's sliding windows:

- The source does not have to send a full window's worth of data.
- The size of the window can be increased or decreased by the destination.
- The destination can send an acknowledgment at any time.

Silly Window Syndrome

A serious problem can arise in the sliding window operation when either the sending application program creates data slowly or the receiving application program consumes data slowly, or both. Either of these situations results in the sending of data in very small segments, which reduces the efficiency of the operation. For example, if TCP sends segments containing only 1 byte of data, it means that we are sending a 41-byte datagram (20 bytes of TCP header and 20 bytes of IP header) that transfers only 1 byte of user data. Here the overhead is 41/1, which indicates that we are using the capacity of the network very inefficiently. This problem is called the **silly window syndrome.** For each site, we first describe how the problem is created and then give a proposed solution.

Syndrome Created by the Sender

The sending TCP may create a silly window syndrome if it is serving an application program that creates data slowly, for example, 1 byte at a time. The application program writes 1 byte at a time into the buffer of the sending TCP. If the sending TCP does not have any specific instructions, it may create segments containing 1 byte of data. The result is a lot of 41-byte segments that are traveling through an internet.

The solution is to prevent the sending TCP from sending the data byte by byte. The sending TCP must be forced to wait as it collects data to send in a larger block. How long should the sending TCP wait? If it waits too long, it may delay the process. If it does not wait long enough, it may end up sending small segments. Nagle found an elegant solution.

Nagle's Algorithm Nagle's algorithm is very simple, but it solves the problem. This algorithm is for the sending TCP:

1. The sending TCP sends the first piece of data it receives from the sending application program even if it is only 1 byte.
2. After sending the first segment, the sending TCP accumulates data in the output buffer and waits until either the receiving TCP sends an acknowledgment or enough data have accumulated to fill a maximum-size segment. At this time, the sending TCP can send the next segment.
3. Step 2 is repeated for the rest of the transmission. Segment 3 must be sent if an acknowledgment is received for segment 2 or enough data are accumulated to fill a maximum-size segment.

Copyrighted material

The elegance of Nagle's algorithm lies in its simplicity and in the fact that it takes into account the speed of the application program that creates the data and the speed of the network that transports the data. If the application program is faster than the network, the segments are larger (maximum-size segments). If the application program is slower than the network, the segments are smaller (less than the maximum segment size).

Syndrome Created by the Receiver

The receiving TCP may create a silly window syndrome if it is serving an application program that consumes data slowly, for example, 1 byte at a time. Suppose that the sending application program creates data in blocks of 1K, but the receiving application program consumes data 1 byte at a time. Also suppose that the input buffer of the receiving TCP is 4K. The sender sends the first 4 kbytes of data. The receiver stores them in its buffer. Now its buffer is full. It advertises a window size of zero, which means the sender should stop sending data. The receiving application reads the first byte of data from the input buffer of the receiving TCP. Now there is 1 byte of space in the incoming buffer. The receiving TCP announces a window size of 1 byte; the sending TCP, which is eagerly waiting to send data, takes this advertisement as good news and sends a segment carrying only 1 byte of data. The procedure will continue. One byte of data is consumed, and a segment carrying 1 byte of data is sent. Again we have an efficiency problem and a silly window syndrome.

Two solutions have been proposed to prevent the silly window syndrome created by an application program that consumes data more slowly than they arrive.

Clark's Solution Clark's solution is to send an acknowledgment as soon as the data arrive, but to announce a window size of zero until either there is enough space to accommodate a segment of maximum size or until one-half of the buffer is empty.

Delayed Acknowledgment The second solution is to delay sending the acknowledgment. This means that when a segment arrives, it is not acknowledged immediately. The receiver waits until there is a decent amount of space in its incoming buffer before acknowledging the arrived segments. The delayed acknowledgment prevents the sending TCP from sliding its window. After it has sent the data in the window, it stops. This kills the syndrome.

Delayed acknowledgment also has another advantage: It reduces traffic. The receiver does not have to acknowledge each segment. However, there also is a disadvantage in that the delayed acknowledgment may force the sender to retransmit the unacknowledged segments.

The protocol balances the advantages and disadvantages, and specifies that the acknowledgment should not be delayed by more than 500 ms.

Error Control

TCP is a reliable transport-layer protocol. This means that an application program that delivers a stream of data to TCP relies on TCP to deliver the entire stream to the application program on the other end in order, without error, and without any part lost or duplicated. Error control in TCP includes mechanisms for detecting corrupted segments, lost segments, out-of-order segments, and duplicated segments.

Copyrighted material

continuous stream of bytes. When a packet arrives that contains the same sequence number as another received segment, the destination TCP simply discards the segment.

Out-of-Order Segment TCP uses the services of IP, an unreliable, connectionless network-layer protocol. The TCP segment is encapsulated in an IP datagram. Each datagram is an independent entity. The routers are free to send each datagram through any route they find suitable. One datagram may follow a route with a short delay; another may follow another route with a longer delay. If datagrams arrive out of order, the TCP segments that are encapsulated in the datagrams will be out of order as well. The handling of out-of-order segments by the destination TCP is very simple: It does not acknowledge an out-of-order segment until it receives all the segments that precede it. Of course, if the acknowledgment is delayed, the timer of the out-of-order segment may mature at the source TCP and the segment may be resent. The duplicates will then be discarded by the destination TCP.

Lost Acknowledgment Figure 22.26 shows a lost acknowledgment sent by the destination. In the TCP acknowledgment mechanism, a lost acknowledgment may not even be noticed by the source TCP. TCP uses a cumulative acknowledgment system. Each acknowledgment is a confirmation that everything up to the byte specified by the acknowledgment number has been received. For example, if the destination sends an ACK segment with an acknowledgment number for byte 1801, it is confirming that bytes 1201 to 1800 have been received. If the destination has previously sent an acknowledgment for byte 1601, meaning it has received bytes 1201 to 1600, loss of the acknowledgment is irrelevant.

Figure 22.26 *Lost acknowledgment*

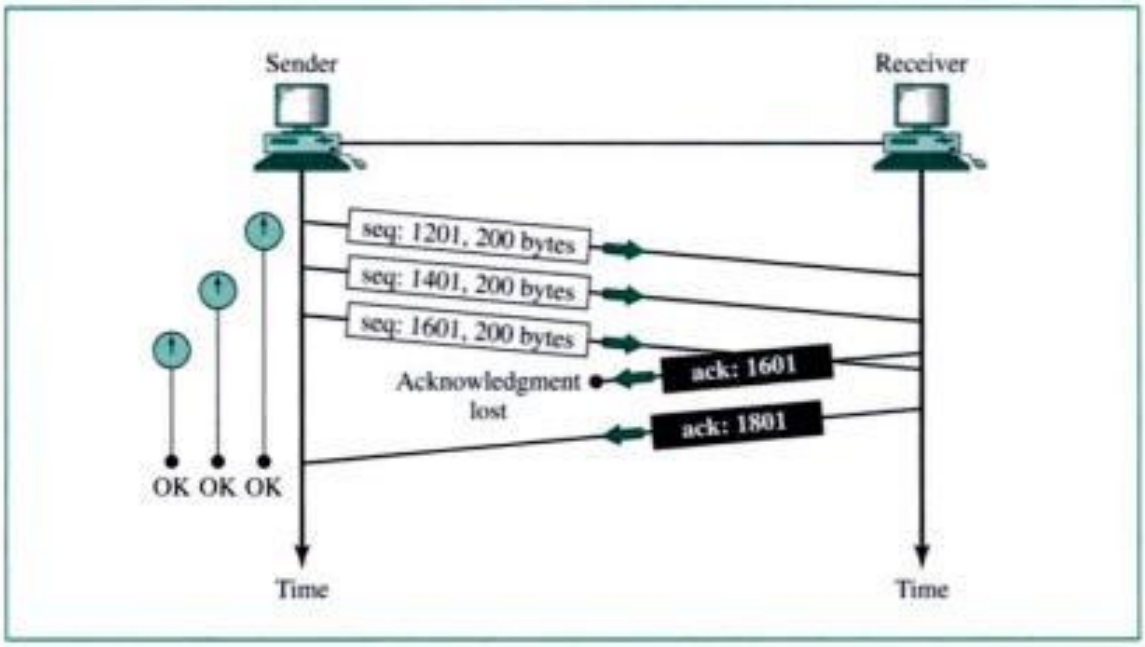

TCP Timers

To perform its operation smoothly, TCP uses the four **TCP timers** shown in Figure 22.27.

Copyrighted material

the sending of the segment and the receiving of the acknowledgment. Each segment has a round-trip time. The value of the RTT used in the calculation of the retransmission time of the next segment is the updated value of the RTT according to the following formula:

$$\text{RTT} = \alpha(\text{previous RTT}) + (1 - \alpha)(\text{current RTT})$$

The value of α is usually 90 percent. This means that the new RTT is 90 percent of the value of the previous RTT plus 10 percent of the value of the current RTT. For example, if the previous RTT is 250 μs and it takes a segment at this moment to be acknowledged in 70 μs, the values of the new RTT and the retransmission time are

$$\text{RTT} = 90\% \times 250 + 10\% \times 70 = 232\ \mu\text{s}$$

$$\text{Retransmission time} = 2 \times 232 = 464\ \mu\text{s}$$

Karn's Algorithm Suppose that a segment is not acknowledged during the retransmission period and it is therefore retransmitted. When the sending TCP receives an acknowledgment for this segment, it does not know if the acknowledgment is for the original segment or for the retransmitted one. This dilemma was solved by Karn. Karn's solution is very simple. Do not consider the RTT of a retransmitted segment in the calculation of the new RTT. Do not update the value of RTT until you send a segment and receive an acknowledgment without the need for retransmission.

Persistence Timer

To deal with the zero window-size advertisement, TCP needs another timer. Suppose the receiving TCP announces a window size of zero. The sending TCP then stops transmitting segments until the receiving TCP sends an acknowledgment announcing a nonzero window size. This acknowledgment can be lost. Remember that acknowledgments are not acknowledged in TCP. If this acknowledgment is lost, the receiving TCP thinks that it has done its job and waits for the sending TCP to send more segments. The sending TCP has not received an acknowledgment and waits for the other TCP to send an acknowledgment advertising the size of the window. Both TCPs can continue to wait for each other forever.

To correct this deadlock, TCP uses a **persistence timer** for each connection. When the sending TCP receives an acknowledgment with a window size of zero, it starts a persistence timer. When the persistence timer goes off, the sending TCP sends a special segment called a *probe*. This segment contains only 1 byte of data. It has a sequence number, but its sequence number is never acknowledged; it is even ignored in calculating the sequence number for the rest of the data. The probe alerts the receiving TCP that the acknowledgment was lost and should be resent.

The value of the persistence timer is set to the value of the retransmission time. However, if a response is not received from the receiver, another probe segment is sent and the value of the persistence timer is doubled and reset. The sender continues sending

Copyrighted material

the probe segments and doubling and resetting the value of the persistence timer until the value reaches a threshold (usually 60 s). After that, the sender sends one probe segment every 60 s until the window is reopened.

Keep-Alive Timer

A **keep-alive timer** is used in some implementations to prevent a long idle connection between two TCPs. Suppose that a client opens a TCP connection to a server, transfers some data, and becomes silent. Perhaps the client has crashed. In this case, the connection remains open forever.

To remedy this situation, most implementations equip a server with a keep-alive timer. Each time the server hears from a client, it resets this timer. The time-out is usually 2 h. If the server does not hear from the client after 2 h, it sends a probe segment. If there is no response after 10 probes, each of which is 75 s apart, it assumes that the client is down and terminates the connection.

Time-Waited Timer

The **time-waited timer** is used during connection termination. When TCP closes a connection, it does not consider the connection really closed. The connection is held in limbo for a time-waited period. This allows duplicate FIN segments, if any, to arrive at the destination to be discarded. The value for this timer is usually 2 times the expected lifetime of a segment.

Congestion Control

We discuss TCP congestion control when we discuss congestion control in general.

Other Features

There are two other TCP features that we need to discuss: pushing data and handling urgent data.

Pushing Data

We saw that the sending TCP uses a buffer to store the stream of data coming from the sending application program. The sending TCP can choose the size of the segments. The receiving TCP also buffers the data when they arrive and delivers them to the application program when the application program is ready or when the receiving TCP feels that it is convenient. This type of flexibility increases the efficiency of TCP.

However, there are occasions in which the application program is not comfortable with this flexibility. For example, consider an application program that communicates interactively with another application program on the other end. The application program on one site wants to send a keystroke to the application at the other site and receive an immediate response. Delayed transmission and delayed delivery of data may not be acceptable to the application program.

TCP can handle such a situation. The application program on the sending site can request a *push* operation. This means that the sending TCP should not wait for the window to be filled. It must create a segment and send it immediately. The sending TCP

Copyrighted material

can also set the push bit (PSH) to tell the receiving TCP that the segment includes data that must be delivered to the receiving application program as soon as possible and not to wait for more data to come.

Although the push operation can be requested by the application program, today most implementations ignore such requests. TCP can choose whether to use this operation.

Urgent Data

TCP is a stream-oriented protocol. This means that the data are presented from the application program to TCP as a stream of characters. Each byte of data has a position in the stream. However, there are occasions in which an application program needs to send *urgent* bytes. This means that the sending application program wants a piece of data to be read out of order by the receiving application program. Suppose that the sending application program is sending data to be processed by the receiving application program. When the result of processing comes back, the sending application program finds that everything is wrong. It wants to abort the process, but it has already sent a huge amount of data. If it issues an abort command (Control + C), these two characters will be stored at the end of the receiving TCP buffer. It will be delivered to the receiving application program after all the data have been processed.

The solution is to send a segment with the URG bit set. The sending application program tells the sending TCP that the piece of data is urgent. The sending TCP creates a segment and inserts the urgent data at the beginning of the segment. The rest of the segment can contain normal data from the buffer. The urgent pointer field in the header defines the end of the urgent data and the start of normal data.

When the receiving TCP receives a segment with the URG bit set, it extracts the urgent data from the segment, using the value of the urgent pointer, and delivers it, out of order, to the receiving application program.

22.4 KEY TERMS

client
client-server paradigm
connection establishment
connection termination
connectionless service
connection-oriented service
ephemeral port number
finite state machine
flow control
keep-alive timer
persistence timer
port number
process-to-process delivery
receiver window
retransmission timer
round-trip time (RTT)
segment
sender window
sequence number
server
silly window syndrome
sliding window
socket address
state transition diagram
TCP timer
three-way handshake
time-waited timer
Transmission Control Protocol (TCP)
user datagram
User Datagram Protocol (UDP)
well-known port numbers

Copyrighted material

4. When is a three-way handshake used?
5. Why would an application use UDP instead of TCP?
6. What is a UDP packet called? What is a TCP packet called?
7. What is the purpose of the sequence number in a TCP packet?
8. What is the purpose of flow control?
9. What is the silly window syndrome?
10. What is Nagle's algorithm?
11. What methods can prevent a silly window syndrome created at the receiver?
12. Name the timers used by TCP.
13. What is the purpose of the TCP push operation?
14. How can TCP handle urgent data?

Multiple-Choice Questions

15. UDP and TCP are both _____ layer protocols.
    a. Physical
    b. Data link
    c. Network
    d. Transport
16. Which of the following functions does UDP perform?
    a. Process-to-process communication
    b. Host-to-host communication
    c. End-to-end reliable data delivery
    d. All the above
17. UDP needs the _____ address to deliver the user datagram to the correct application program.
    a. Port
    b. Application
    c. Internet
    d. Physical
18. Which is a legal port address?
    a. 0
    b. 513
    c. 65,535
    d. All the above
19. The definition of reliable delivery includes _____.
    a. Error-free delivery
    b. Receipt of the complete message
    c. In-order delivery
    d. All the above

Copyrighted material

20. Which of the following does UDP guarantee?
    a. Sequence numbers on each user datagram
    b. Acknowledgments to the sender
    c. Flow control
    d. None of the above
21. The source port address on the UDP user datagram header defines _____.
    a. The sending computer
    b. The receiving computer
    c. The application program on the sending computer
    d. The application program on the receiving computer
22. Which of the following is *not* part of the UDP user datagram header?
    a. Length of header
    b. Source port address
    c. Checksum
    d. Destination port address
23. The _____ defines the client program.
    a. Ephemeral port number
    b. IP address
    c. Well-known port number
    d. Physical address
24. The _____ defines the server program.
    a. Ephemeral port number
    b. IP address
    c. Well-known port number
    d. Physical address
25. IP is responsible for _____ communication while TCP is responsible for _____ communication.
    a. Host-to-host; process-to-process
    b. Process-to-process; host-to-host
    c. Process-to-process; node-to-node
    d. Node-to-node; process-to-process
26. A host can be identified by _____ while a program running on the host can be identified by _____.
    a. An IP address; a port number
    b. A port number; an IP address
    c. An IP address; a host address
    d. An IP address; a well-known port
27. The _____ address uniquely identifies a running application program.
    a. IP address
    b. Host

Copyrighted material

c. NIC

d. Socket

28. The _____ field is used to order packets of a message.

a. Urgent pointer

b. Checksum

c. Sequence number

d. Acknowledgment number

29. The _____ field is used for error detection.

a. Urgent pointer

b. Checksum

c. Sequence number

d. Acknowledgment number

30. Multiply the header length field by _____ to find the total number of bytes in the TCP header.

a. 2

b. 4

c. 6

d. 8

31. Urgent data require the urgent pointer field as well as the URG bit in the _____ field.

a. Control

b. Offset

c. Sequence number

d. Reserved

32. In _____, data are sent or processed at a very inefficient rate, such as 1 byte at a time.

a. Nagle's syndrome

b. Silly window syndrome

c. Sliding window syndrome

d. Delayed acknowledgment

33. To prevent silly window syndrome created by a receiver that processes data at a very slow rate, _____ can be used.

a. Clark's solution

b. Nagle's algorithm

c. Delayed acknowledgment

d. (a) or (c)

34. To prevent silly window syndrome created by a sender that sends data at a very slow rate, _____ can be used.

a. Clark's solution

b. Nagle's algorithm

c. Delayed acknowledgment

d. (a) or (c)

Copyrighted material

c. Keep-alive
d. Time-waited

Exercises

43. In cases where reliability is not of primary importance, UDP would make a good transport protocol. Give examples of specific cases.
44. Are both UDP and IP unreliable to the same degree? Why or why not?
45. Do port addresses need to be unique? Why or why not? Why are port addresses shorter than IP addresses?
46. What is the dictionary definition of the word *ephemeral?* How does it apply to the concept of the ephemeral port number?
47. What is the minimum size of a UDP datagram? What is the maximum size of a UDP datagram?
48. What is the minimum size of the process data that can be encapsulated in a UDP datagram? What is the maximum size of the process data that can be encapsulated in a UDP datagram?
49. A client uses UDP to send data to a server. The data are 16 bytes. Calculate the efficiency of this transmission at the UDP level (ratio of useful bytes to total bytes).
50. Redo Exercise 49 calculating the efficiency of transmission at the IP level. Assume no options for the IP header.
51. Redo Exercise 49 calculating the efficiency of transmission at the data link layer. Assume no options for the IP header, and use Ethernet at the data link layer.
52. What is the maximum size of the TCP header? What is the minimum size of the TCP header?
53. If the value of HLEN is 0111, how many bytes of option are included in the segment?
54. What can you say about the TCP segment in which the value of the control field is one of the following?
    a. 000000
    b. 000001
    c. 010001
    d. 000100
    e. 000010
    f. 010010
55. TCP is sending data at 1 megabyte per second (8 Mbytes/s). If the sequence number starts with 7000, how long does it take before the sequence number goes back to zero?
56. A TCP connection is using a window size of 10,000 bytes, and the previous acknowledgment number was 22,001. It receives a segment with acknowledgment number 24,001. Draw a diagram to show the situation of the window before and after.
57. Redo Exercise 56 if the receiver has changed the window size to 11,000.
58. Redo Exercise 56 if the receiver has changed the window size to 90,000.

Copyrighted material

CHAPTER 23

Congestion Control and Quality of Service

Congestion control and quality of service are two issues so closely bound together that improving one means improving the other and ignoring one usually means ignoring the other. Most techniques to prevent or eliminate congestion also improve the quality of service in a network.

We have postponed the discussion of these issues until now because these are issues related not to one layer, but to three: the data link layer, the network layer, and the transport layer. We waited until now so that we can discuss these issues once instead of repeating the subject three times. Throughout the chapter, we give examples of congestion control and quality of service at different layers.

23.1 DATA TRAFFIC

The main focus of congestion control and quality of service is data traffic. In congestion control we try to avoid traffic congestion. In quality of service, we try to create an appropriate environment for the traffic. So, before talking about congestion control and quality of service, we discuss the data traffic itself.

Traffic Descriptor

Traffic descriptors are qualitative values that represent a data flow. Figure 23.1 shows a traffic flow with some of these values.

Average Data Rate

The **average data rate** is the number of bits sent during a period of time, divided by the number of seconds in that period. We use the following equation:

$$\text{Average data rate} = \frac{\text{amount of data}}{\text{time}}$$

The average data rate is a very useful characteristic of traffic because it indicates the average bandwidth needed by the traffic.

Copyrighted material

23.2 CONGESTION

An important issue in a packet-switched network is **congestion.** Congestion in a network may occur if the **load** on the network—the number of packets sent to the network—is greater than the *capacity* of the network—the number of packets a network can handle. **Congestion control** refers to the mechanisms and techniques to control the congestion and keep the load below the capacity.

We may ask why there is congestion on a network. Congestion happens in any system that involves waiting. For example, congestion happens on a freeway because any abnormality in the flow, such as an accident during rush hour, creates blockage.

Congestion in a network or internetwork occurs because routers and switches have queues—buffers that hold the packets before and after processing. A router, for example, has an input queue and an output queue for each interface. When a packet arrives at the incoming interface, it undergoes three steps before departing, as shown in Figure 23.5.

Figure 23.5 *Incoming packet*

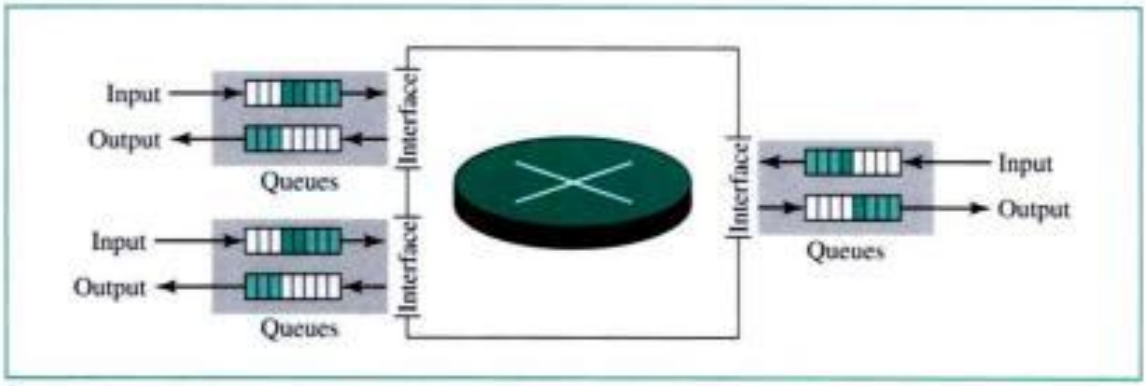

1. The packet is put at the end of the input queue while waiting to be checked.
2. The processing module of the router removes the packet from the input queue once it reaches the front of the queue and uses its routing table and the destination address to find the route.
3. The packet is put in the appropriate output queue and waits its turn to be sent.

We need to be aware of two issues. First, if the rate of packet arrival is higher than the packet processing rate, the input queues become longer and longer. Second, if the packet departure rate is less than the packet processing rate, the output queues become longer and longer.

Network Performance

Congestion control involves two factors that measure the performance of a network: **delay** and **throughput.**

Delay versus Load

Figure 23.6 shows the relationship between packet delay and network load.

Copyrighted material

Figure 23.6 *Packet delay and network load*

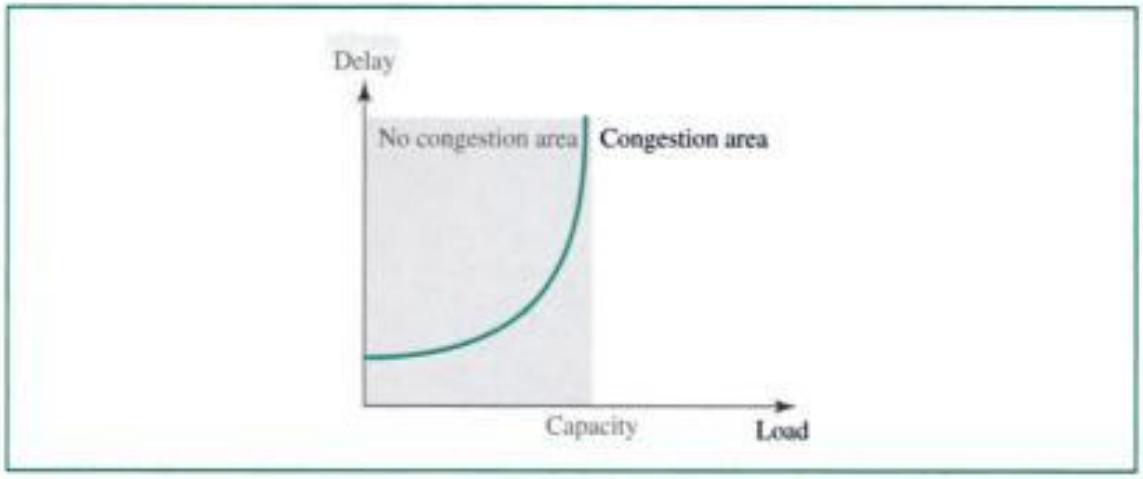

Note that when the load is much less than the capacity of the network, the delay is at a minimum. This minimum delay is composed of propagation delay and processing delay, both of which are negligible. However, when the load reaches the network capacity, the delay increases sharply because we now need to add the waiting time in the queues (for all routers in the path) to the total delay. Note that the delay becomes infinite when the load is greater than the capacity. If this is not obvious, consider the size of the queues when almost no packet reaches the destination, or reaches the destination with infinite delay; the queues become longer and longer. Delay has a negative effect on the load and consequently the congestion. When a packet is delayed, the source, not receiving the acknowledgment, retransmits the packet, which makes the delay, and the congestion, worse.

Throughput versus Load

We defined throughput in Chapter 3 as the number of bits passing through a point in a second. We can extend that definition from bits to packets and from a point to a network. We can define **throughput** in a network as the number of packets passing through the network in a unit of time. We can then plot the throughput versus the network load, as shown in Figure 23.7.

Figure 23.7 *Throughput versus network load*

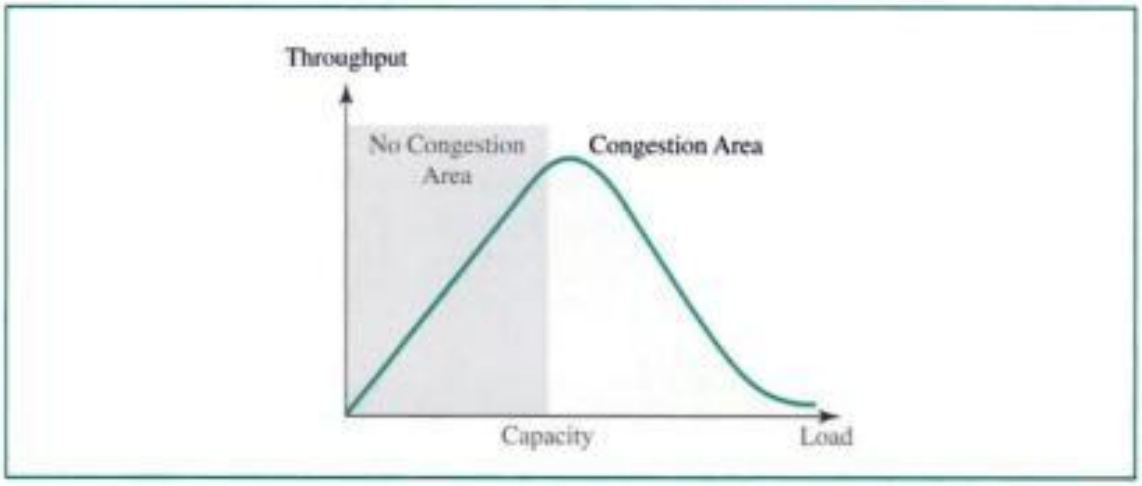

Copyrighted material

When two endpoints are communicating using a Frame Relay network, four situations may occur with regard to congestion. Figure 23.11 shows these four situations and the values of FECN and BECN.

Figure 23.11 *Four cases of congestion*

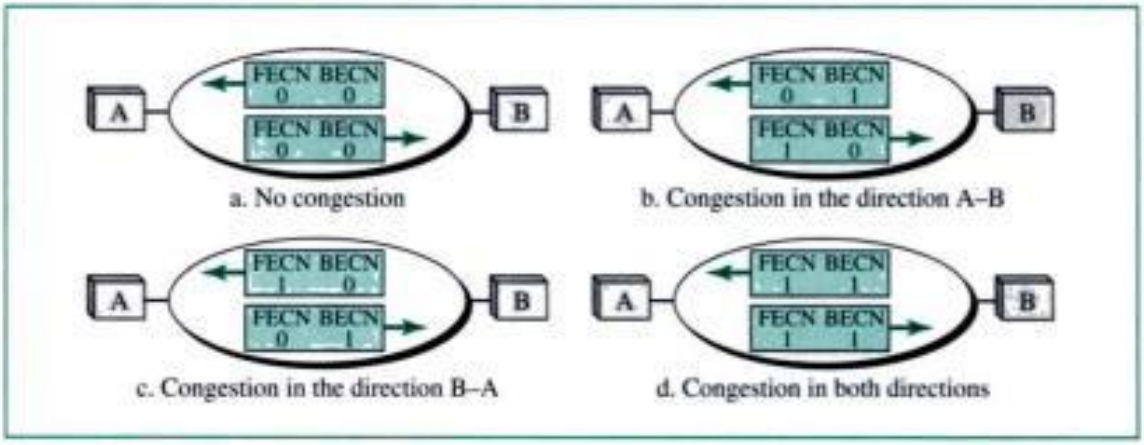

23.5 QUALITY OF SERVICE

Quality of service (QoS) is an internetworking issue that has been discussed more than defined. We can informally define quality of service as something a flow seeks to attain.

Flow Characteristics

Traditionally, four types of characteristics are attributed to a flow: reliability, delay, jitter, and bandwidth, as shown in Figure 23.12.

Figure 23.12 *Flow characteristics*

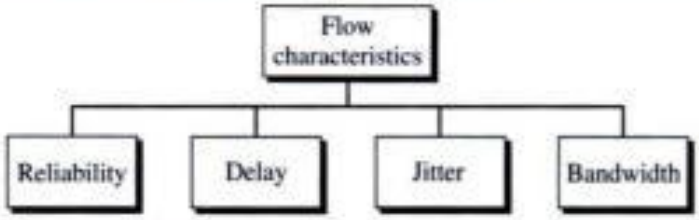

Reliability

Reliability is a characteristic that a flow needs. Lack of reliability means losing a packet or acknowledgment, which entails retransmission. However, the sensitivity of application programs to reliability is not the same. For example, it is more important

Copyrighted material

that electronic mail, file transfer, and Internet access have reliable transmissions than telephony or audio conferencing.

Delay

Source-to-destination **delay** is another flow characteristic. Again applications can tolerate delay in different degrees. In this case, telephony, audio conferencing, video conferencing, and remote log-in need minimum delay, while delay in file transfer or email is less important.

Jitter

Jitter is the variation in delay for packets belonging to the same flow. Real-time audio and video cannot tolerate high jitter. For example, a real-time video broadcast is useless if there is a 2-ms delay for the first and second packets and a 60-ms delay for the third and fourth. On the other hand, it does not matter if packets carrying information in a file have different delays. The transport layer at the destination waits until all packets arrive before delivery to the application layer.

Bandwidth

Different applications need different bandwidths. In video conferencing we need to send millions of bits per second to refresh a color screen while the total number of bits in an email may not reach even a million.

Flow Classes

Based on the flow characteristics, we can classify flows into groups, with each group having similar levels of characteristics. This categorization is not formal or universal; some protocols such as ATM have defined classes, as we will see later.

23.6 TECHNIQUES TO IMPROVE QOS

In Section 23.5 we tried to define QoS in terms of its characteristics. In this section, we discuss some techniques that can be used to improve the quality of service. We briefly discuss four common methods: scheduling, traffic shaping, admission control, and resource reservation.

Scheduling

Packets from different flows arrive at a switch or router for processing. A good scheduling technique treats the different flows in a fair and appropriate manner. Several scheduling techniques are designed to improve the quality of service. We discuss three of them here: FIFO queuing, priority queuing, and weighted fair queuing.

FIFO Queuing

In **first-in, first-out (FIFO) queuing,** packets wait in a buffer (queue) until the node (router or switch) is ready to process them. If the average arrival rate is higher than the

Copyrighted material

are weighted based on the priority of the queues; higher priority means a higher weight. The system processes packets in each queue in a round-robin fashion with the number of packets selected from each queue based on the corresponding weight. For example, if the weights are 3, 2, and 1, three packets are processed from the first queue, two from the second queue, and one from the third queue. If the system does not impose priority on the classes, all weights can be equal. In this way, we have fair queuing with priority. Figure 23.15 shows the technique with three classes.

Figure 23.15 *Weighted fair queuing*

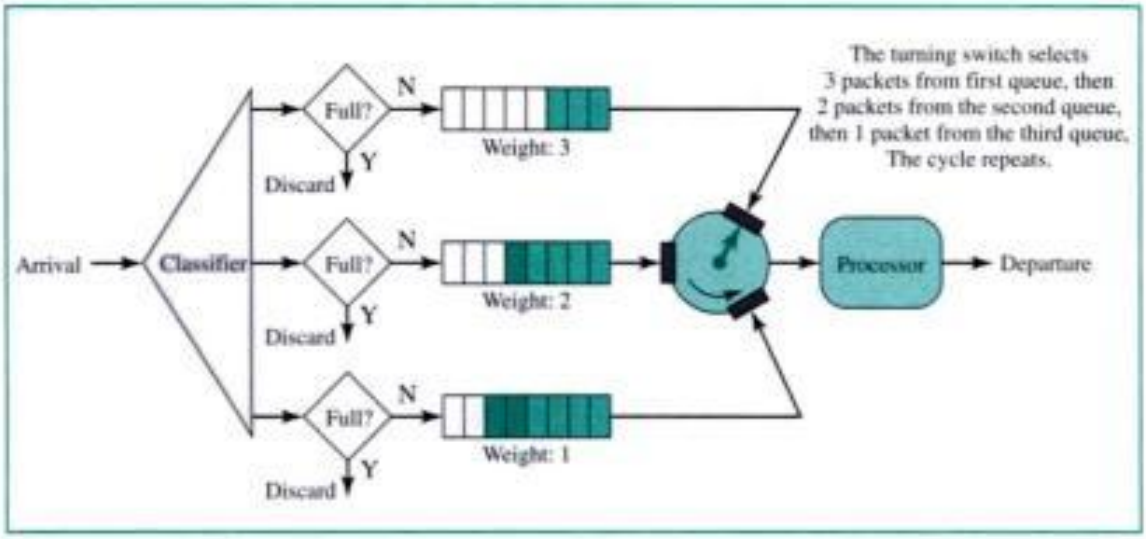

Traffic Shaping

Traffic shaping is a mechanism to control the amount and the rate of the traffic sent to the network. Two techniques can shape traffic: leaky bucket and token bucket.

Leaky Bucket

If a bucket has a small hole at the bottom, the water leaks from the bucket at a constant rate as long as there is water in the bucket. The rate at which the water leaks does not depend on the rate at which the water is input to the bucket unless the bucket is empty. The input rate can vary, but the output rate remains constant. Similarly, in networking, a technique called **leaky bucket** can smooth out bursty traffic. Bursty chunks are stored in the bucket and sent out at an average rate. Figure 23.16 shows a leaky bucket and its effects.

In the figure, we assume that the network has committed a bandwidth of 3 Mbps for a host. The use of the leaky bucket shapes the input traffic to make it conform to this commitment. In the figure the host sends a burst of data at a rate of 12 Mbps for 2 s, for a total of 24 megabits of data. The host is silent for 5 s and then sends data at a rate of 2 Mbps for 3 s, for a total of 6 megabits of data. In all, the host has sent 30 megabits of data in 10 s. The leaky bucket smooths the traffic by sending out data at a rate of 3 Mbps during the same 10 s. Without the leaky bucket, the beginning burst may have hurt the network by consuming more bandwidth than is set aside for this host. We can also see that the leaky bucket may prevent congestion. As an analogy, consider the freeway

Copyrighted material

Figure 23.16 *Leaky bucket*

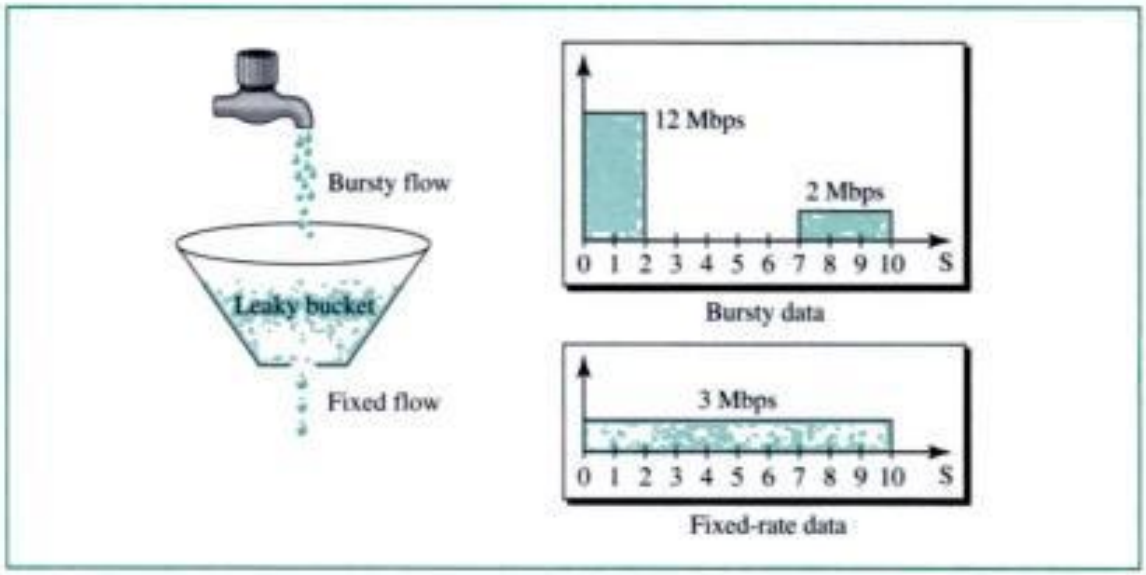

during rush hour (bursty traffic). If, instead, commuters could stagger their working hours, congestion on our freeways could be avoided.

A simple leaky bucket implementation is shown in Figure 23.17. A FIFO queue holds the packets. If the traffic consists of fixed-size packets (e.g., cells in ATM networks), the process removes a fixed number of packets from the queue at each tick of the clock. If the traffic consists of variable-length packets, the fixed output rate must be based on the number of bytes or bits.

Figure 23.17 *Leaky bucket implementation*

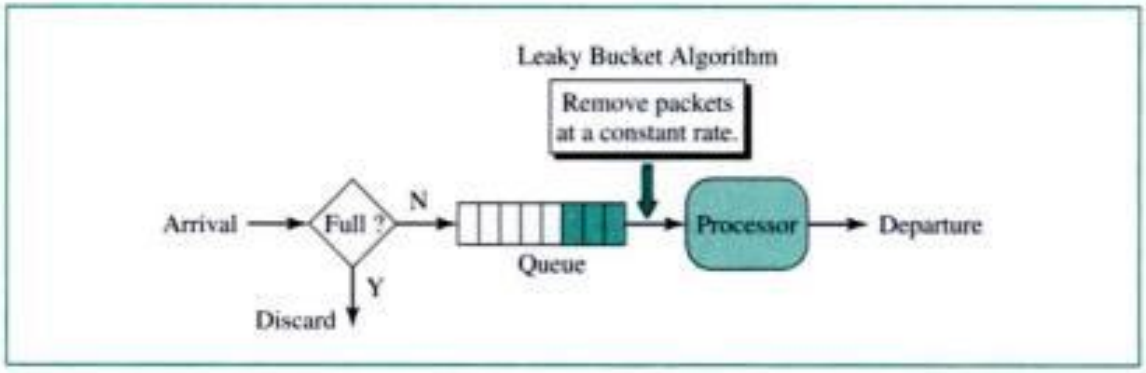

The following is an algorithm for variable-length packets:

1. Initialize a counter to n at the tick of the clock.
2. If n is greater than the size of the packet, send the packet and decrement the counter by the packet size. Repeat this step until n is smaller than the packet size.
3. Reset the counter and go to step 1.

A leaky bucket algorithm shapes bursty traffic into fixed-rate traffic by averaging the data rate. It may drop the packets if the bucket is full.

Copyrighted material

Reservation Merging

In RSVP, the resources are not reserved for each receiver in a flow; the reservation is merged. In Figure 23.21 Rc3 requests a 2-Mbps bandwidth while Rc2 requests a 1-Mbps bandwidth. Router R3, which needs to make a bandwidth reservation, merges the two requests. The reservation is made for 2 Mbps, the larger of the two, because a 2-Mbps input reservation can handle both requests. The same situation is true for R2. The reader may ask why Rc2 and Rc3, both belonging to one single flow, request different amounts of bandwidth. The answer is that, in a multimedia environment, different receivers may handle different grades of quality. For example, Rc2 may be able to receive video only at 1 Mbps (lower quality), while Rc3 may be able to receive video at 2 Mbps (higher quality).

Figure 23.21 *Reservation merging*

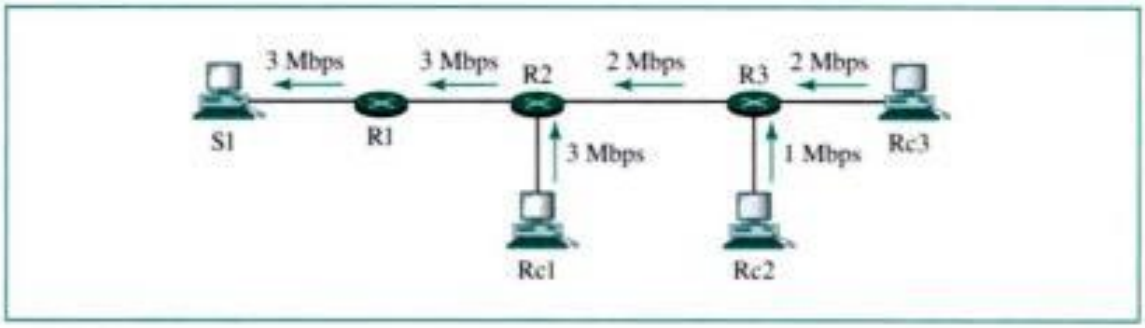

Reservation Styles

When there is more than one flow, the router needs to make a reservation to accommodate all of them. RSVP defines three types of reservation styles, as shown in Figure 23.22.

Figure 23.22 *Reservation styles*

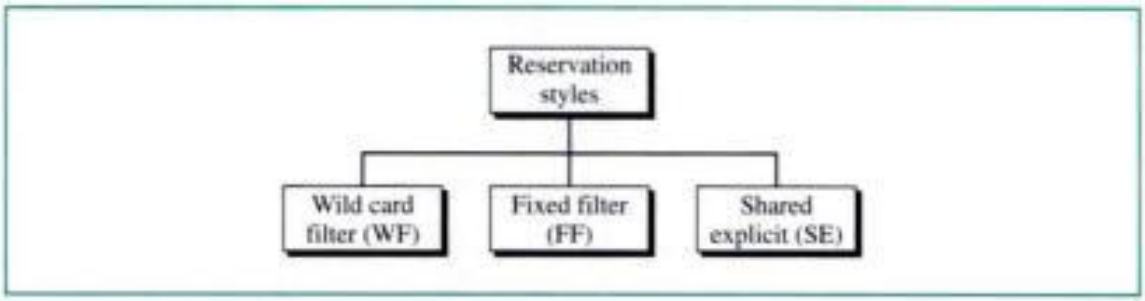

Wild Card Filter Style In this style, the router creates a single reservation for all senders. The reservation is based on the largest request. This type of style is used when the flows from different senders do not occur at the same time.

Fixed Filter Style In this style, the router creates a distinct reservation for each flow. This means that if there are *n* flows, *n* different reservations are made. This type of

Copyrighted material

Figure 23.25 *Relationship between traffic control attributes*

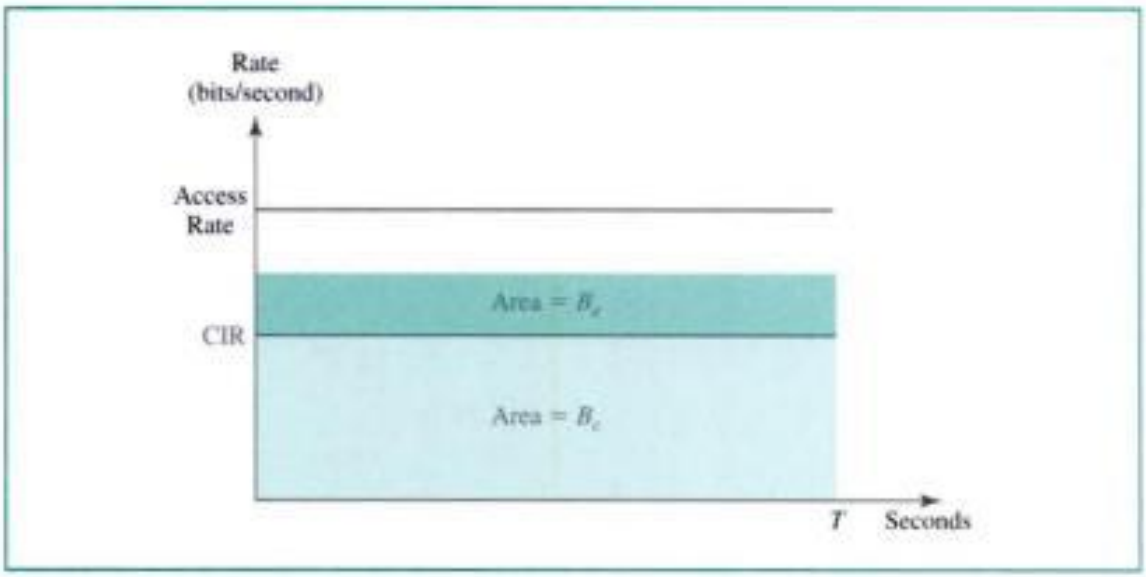

to transfer without discarding any frame or setting the DE bit. For example, if a B_c of 400 kbits for a period of 4 s is granted, the user can send up to 400 kbits during a 4-s interval without worrying about any frame loss. Note that this is not a rate defined for each second. It is a cumulative measurement. The user can send 300 kbits during the first second, no data during the second and the third seconds, and finally 100 kbits during the fourth second.

Committed Information Rate

The **committed information rate (CIR)** is similar in concept to committed burst size except that it defines an average rate in bits per second. If the user follows this rate continuously, the network is committed to deliver the frames. However, because it is an average measurement, a user may send data higher than the CIR at times or lower at other times. As long as the average for the predefined period is met, the frames will be delivered.

The cumulative number of bits sent during the predefined period cannot exceed B_c. Note that the CIR is not an independent measurement; it can be calculated by using the following formula:

$$\mathbf{CIR} = \frac{B_c}{T} \text{ bps}$$

For example, if the B_c is 5 kbits in a period of 5 s, the CIR is 5000/5, or 1 Kbps.

Excess Burst Size

For every connection, Frame Relay defines an **excess burst size B_e.** This is the maximum number of bits in excess of B_c that a user can send during a predefined period of time. The network is committed to transfer these bits if there is no congestion. Note that there is less commitment here than in the case of B_c. The network is committing itself conditionally.

Copyrighted material

User Rate

Figure 23.26 shows how a user can send bursty data. If the user never exceeds B_c, the network is committed to transmit the frames without discarding any. If the user exceeds B_c by less than B_e (that is, the total number of bits is less than $B_c + B_e$), the network is committed to transfer all the frames if there is no congestion. If there is congestion, some frames will be discarded. The first switch that receives the frames from the user has a counter and sets the DE bit for the frames that exceed B_c. The rest of the switches will discard these frames if there is congestion. Note that a user who needs to send data faster may exceed the B_c level. As long as the level is not above $B_c + B_e$, there is a chance that the frames will reach the destination without being discarded. Remember, however, that the moment the user exceeds the $B_c + B_e$ level, all the frames sent after that are discarded by the first switch.

Figure 23.26 *User rate in relation to B_c and $B_c + B_e$*

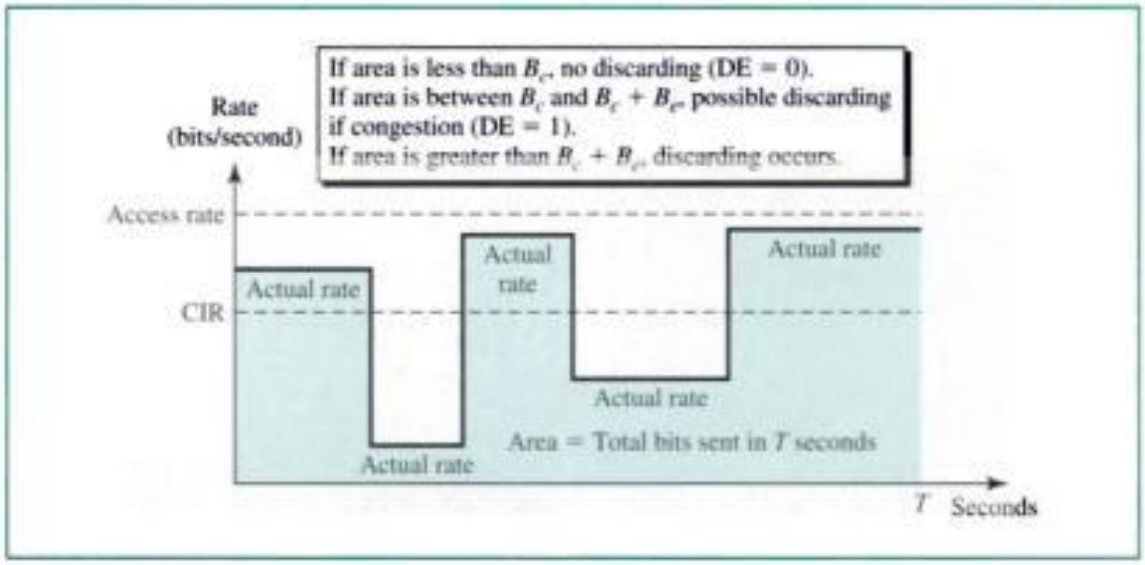

QoS in ATM

The QoS in ATM is based on the class, user-related attributes, and network-related attributes.

Classes

The ATM Forum defines four service classes: CBR, VBR, ABR, and UBR (see Fig. 23.27).

CBR The **constant-bit-rate (CBR)** class is designed for customers who need real-time audio or video services. The service is similar to that provided by a dedicated line such as a T-line.

VBR The **variable-bit-rate (VBR)** class is divided into two subclasses: real time (VBR-RT) and non-real-time (VBR-NRT). VBR-RT is designed for those users who need real-time services (such as voice and video transmission) and use compression techniques to create a variable bit rate. VBR-NRT is designed for those users who do

Copyrighted material

Figure 23.27 *Service classes*

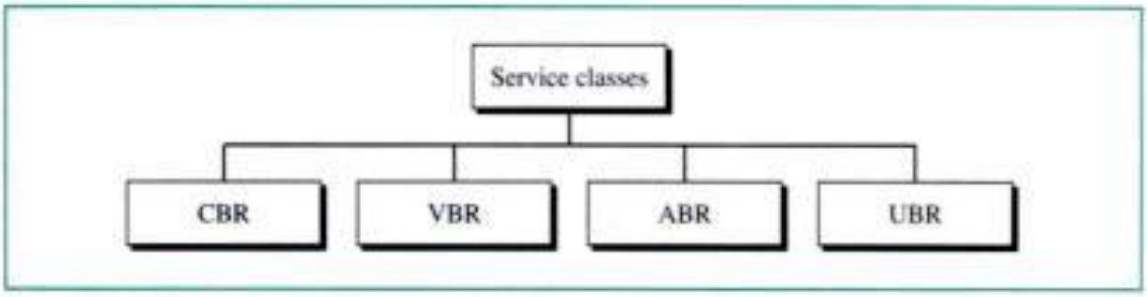

not need real-time services but use compression techniques to create a variable bit rate.

ABR The **available-bit-rate (ABR)** class delivers cells at a minimum rate. If more network capacity is available, this minimum rate can be exceeded. ABR is particularly suitable for applications that are bursty.

UBR The **unspecified-bit-rate (UBR)** class is a best-effort delivery service that does not guarantee anything.

Figure 23.28 shows the relationship of different classes to the total capacity of the network.

Figure 23.28 *Relationship of service classes to the total capacity of the network*

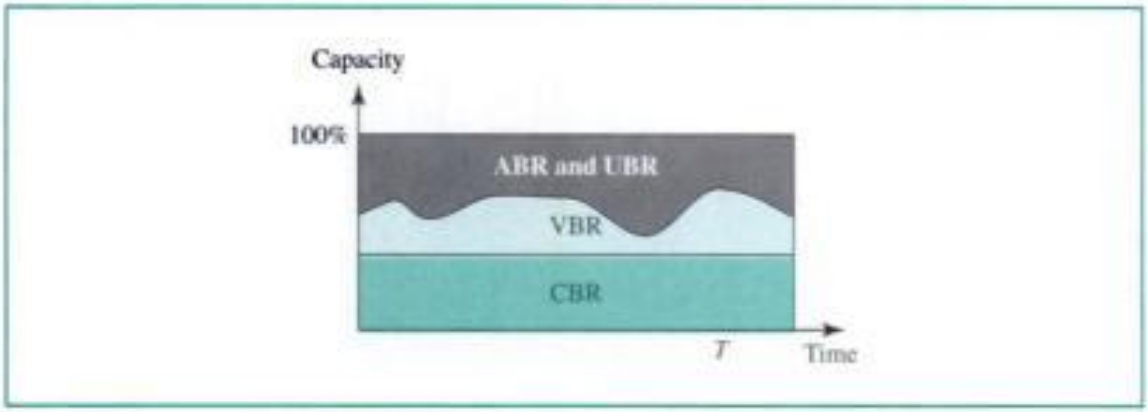

User-Related Attributes

ATM defines two sets of attributes. User-related attributes are those attributes that define how fast the user wants to send data. These are negotiated at the time of contract between a user and a network. The following are some user-related attributes:

SCR The sustained cell rate (SCR) is the average cell rate over a long time interval. The actual cell rate may be lower or higher than this value, but the average should be equal to or less than the SCR.

PCR The peak cell rate (PCR) defines the sender's maximum cell rate. The user's cell rate can sometimes reach this peak, as long as the SCR is maintained.

Copyrighted material

21. When the load is greater than the capacity, the delay _____.
    a. Decreases
    b. Increases linearly
    c. Goes to infinity
    d. Goes to zero
22. _____ is a closed-loop mechanism to alleviate congestion.
    a. A choke point
    b. Implicit signaling
    c. Explicit signaling
    d. All the above
23. For a system using TCP, the sender window size is determined by the _____ window size.
    a. Receiver
    b. Sender
    c. Congestion
    d. (a) and (c)
24. Slow start is used in conjunction with _____ as a TCP congestion control strategy.
    a. Additive increase
    b. Additive decrease
    c. Multiplicative increase
    d. Multiplicative decrease
25. The FECN informs the _____ of congestion while the BECN informs the _____ of congestion.
    a. Destination; interface
    b. Destination; sender
    c. Sender; destination
    d. Interface; sender
26. _____ is a flow characteristic in which the delay varies for packets belonging to the same flow.
    a. Choke point
    b. Throughput
    c. Additive increase
    d. Jitter
27. In _____ queuing the first packet into the queue is the first packet out of the queue.
    a. FIFO
    b. LIFO
    c. Priority
    d. Weighted fair
28. The _____ traffic shaping method gives a host credit for its idle time.
    a. Leaky bucket
    b. Token bucket

Copyrighted material

36. What is the relationship between the access rate and the CIR?
    a. CIR is always equal to the access rate.
    b. CIR is greater than the access rate.
    c. CIR is less than the access rate.
    d. CIR plus B_e is equal to the access rate.
37. A Frame Relay network is committed to transfer _____ bps without discarding any frames.
    a. B_c
    b. B_e
    c. CIR
    d. (a) and (b)
38. In Frame Relay the transmission rate can never exceed _____.
    a. B_c
    b. B_e
    c. CIR
    d. The access rate
39. The cell _____ is the difference between the CTD maximum and minimum.
    a. Loss ratio
    b. Transfer delay
    c. Delay variation
    d. Error ratio
40. The cell _____ is the ratio of lost cells to cells sent.
    a. Loss ratio
    b. Transfer delay
    c. Delay variation
    d. Error ratio
41. The _____ service class is particularly suitable for applications with bursty data.
    a. CBR
    b. VBR
    c. ABR
    d. UBR
42. The _____ service class is suitable for customers who need real-time video transmission without compression.
    a. CBR
    b. VBR
    c. ABR
    d. UBR
43. The _____ is greater than the SCR.
    a. PCR
    b. MCR

Copyrighted material

PART 6

Application Layer

This part of the book explores several application programs, available at the topmost layer, layer five, of the Internet model. The application layer allows people to use the Internet. We could say that the other four layers are created so that people can use these application programs.

Figure 1 shows the position of the application layer in the 5-layer Internet model. The application layer is the fifth layer in the model. Above it are the users and below it is the transport layer. This means the application layer receives services from the transport layer and provides services to users.

Figure 1 *Position of application layer*

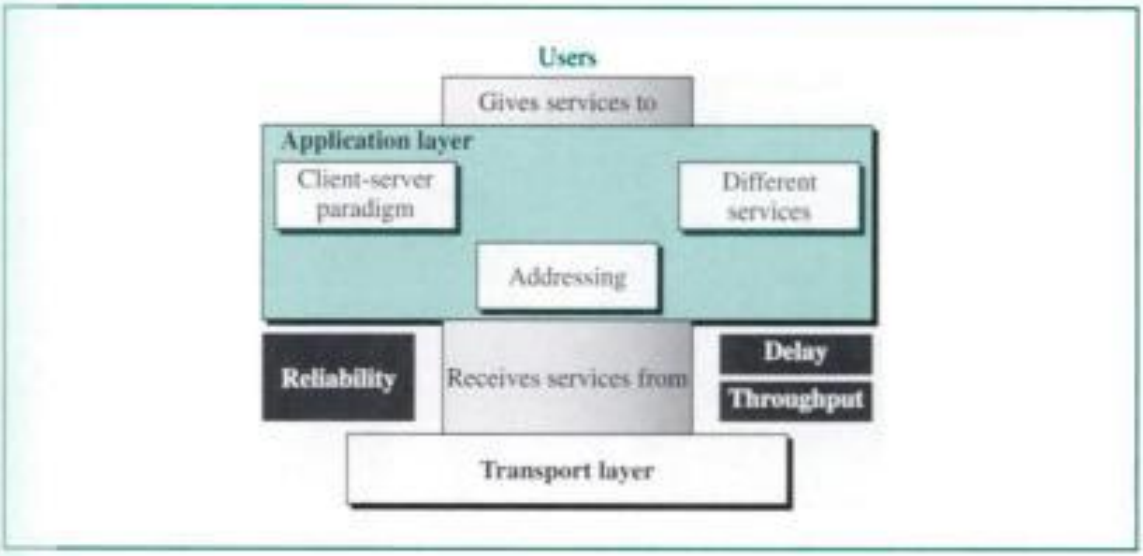

The application layer enables the user, whether human or software, to access the network. It provides user interfaces and support for services such as electronic mail, remote file access and transfer, and access to the World Wide Web.

Issues

We can say that there are three general issues related to this layer: the client-server paradigm, addressing, and types of services.

Copyrighted material

Client-Server Paradigm

The application layer programs are based on the concept of clients and serve purpose of a network, and in particular, the global Internet, is to provide a servi user. A user at a local site wants to receive a service from a computer at a remo For example, a user wants to retrieve a file from a remote computer. Both con must run programs. The local computer runs a program that requests a servic another program on the remote computer. We discuss the client-server parad Chapter 24.

Addressing

A client and a server communicate with each other using addresses. When a requests a service from a server, it must include the address of the server as the d tion address, as well as its own address as the source address. The source ado required so that the server knows where to send the response. When the server re to the request, it reverses the addresses; it uses its own address as the source a address of the client as the destination.

However, the addressing mechanism in the application program is not like th in other layers; each application has its own address format. For example, an address may look like *forouzan@fhda.edu*, while an address to access a web pag look like *http://www.fhda.edu*.

We can say that part of the address is related to the port address of the serv the directory structure where the server program is located. The main part, how an alias name for the address of the remote host. The application program uses a name instead of an IP address. Although this type of address is very conveni human beings to remember and use, it is not suitable for the IP protocol when i a communication with the server. The alias address must be mapped to the IP a An application program needs the service of another entity to map the alias ado the IP address. This entity is an application program, called DNS, in this layer. not directly used by the user; it is used by other application programs to perfo mapping. We discuss DNS in Chapter 25.

Types of Service

The application layer is designed to give different services to the user or user pro The most common service, SMTP, allows a user to send a message to another use Internet. This service is electronic mail and has many similarities to the trad postal mail. Another common service is file transfer. A user can transfer a file f computer to the server or transfer a file from a server to its computer. This appl program is called FTP. We discuss these two similar services in Chapter 26.

The invention of the World Wide Web heralds a new era for Internet users. is a repository of information that the Internet user can access. To use the requires a simple transfer protocol called HTTP. We discuss WWW and HT Chapter 27.

Recently, multimedia in the form of audio and video data, has attracted the tion of Internet users. They can listen to music that is streamed from a server. Th

Copyrighted material

listen to radio or TV broadcasts through the Internet. They can to talk to each other or create a teleconferencing environment. This type of service is new and growing. It has brought new concepts to the Internet. The quality of service that we discussed in the previous parts of the book plays a very important role when we use multimedia. We have devoted Chapter 28 to this issue.

Support

To be useful to the user, an application program must be supported by the services provided by the lower layer, the transport layer. The type of support needed is different for different applications. We can categorize this support into three categories: reliability, throughput, and delay.

Reliability

Some applications depend heavily on reliability. Among them are email and file transfer. We do not want to receive a corrupted email or a file that is missing some of its parts. These types of applications need either to include reliability as part of their protocol or use the services of a reliable transport-layer protocol such as TCP. Other application programs are not so sensitive to reliability. If a very small part of the music we download from the Internet is missing, it might not even be noticeable.

Throughput

Maximum throughput, the maximum amount of data that can be transferred in a unit of time is a criteria required by some applications. Multimedia applications need, in general, a high throughput to be effective. We see in Chapter 28 that transferring live video files involves transferring millions of bits in a short amount of time, even if the data are compressed. Throughput is intrinsically related to bandwidth. An application that requires a high throughput requires a high bandwidth.

Delay

Some applications are very sensitive to delay. An interactive real-time application program cannot tolerate delay. We do not want to use the Internet as a telephone service if there are long delays in the conversation. Some applications, on the other hand are not sensitive to delay. An email can wait for a few seconds or even hours before delivery.

Chapters

Part six of the book covers five chapters: Chapter 24 covers the concept of the client-server paradigm and the socket interface. Chapter 25 is devoted to DNS, a protocol that maps application-layer addresses to network-layer addresses. Chapter 26 explores two common protocols, SMTP and FTP, that allow users to transfer messages and files through the Internet. Chapter 27 discusses WWW and the protocol that accesses it, HTTP. Finally, Chapter 28 is an introduction to the use of multimedia in the Internet, an issue that is evolving rapidly.

Copyrighted material

each type of service? In the Internet, services needed frequently and by many users have specific client-server application programs. For example, we have separate client-server application programs that allow users to access files or send email. For services that are more customized, we should have one generic application program that allows users to access the services available on a remote computer.

Client A **client** is a program running on the local machine requesting service from a server. A client program is started by the user (or another application program) and terminates when the service is complete. A client opens the communication channel using the IP address of the remote host and the well-known port address of the specific server program running on that machine. This is called an **active open.** After a channel of communication is opened, the client sends its request and receives a response. Although the request-response part may be repeated several times, the whole process is finite and eventually comes to an end. At that moment, the client closes the communication channel with an **active close.**

Server A **server** is a program running on the remote machine and providing service to the clients. When it starts, it opens the door for incoming requests from clients, but it never initiates a service until it is requested to do so. This is called a *passive open.*

A server program is an infinite program. When it starts, it runs infinitely unless a problem arises. It waits for incoming requests from clients. When a request arrives, it responds to the request, either iteratively or concurrently, as we will see shortly.

Concurrency

Both clients and servers can run in concurrent mode.

Concurrency in Clients

Clients can be run on a machine either iteratively or concurrently. Running clients **iteratively** means running them one by one; one client must start, run, and terminate before the machine can start another client. Most computers today, however, allow **concurrent clients;** that is, two or more clients can run at the same time.

Concurrency in Servers

An **iterative server** can process only one request at a time; it receives a request, processes it, and sends the response to the requestor before it handles another request. A **concurrent server,** on the other hand, can process many requests at the same time and thus can share its time between many requests.

The servers use either UDP, a connectionless transport layer protocol, or TCP, a connection-oriented transport layer protocol. Server operation, therefore, depends on two factors: the transport layer protocol and the service method. Theoretically we can have four types of servers: connectionless iterative, connectionless concurrent, connection-oriented iterative, and connection-oriented concurrent.

Connectionless Iterative Server The servers that use UDP are normally iterative, which, as we have said, means that the server processes one request at a time. The first

Copyrighted material

28. A _____ server serves multiple clients simultaneously.
    a. Connection-oriented iterative
    b. Connection-oriented concurrent
    c. Connectionless iterative
    d. Connectionless concurrent

Exercises

29. In Figure 24.7, explain why the loop on the server side is repeated infinitely, but the one on the client side is repeated a finite number of times.
30. In Figure 24.7, if more than one client accesses the same server, how does the transport layer on the client side know where to deliver an arriving response?
31. In Figure 24.7, if a client sends several requests and receives several responses, how can it match a response to a request?
32. In Figure 24.8, there are three loops. Explain why only of them is an infinite loop.
33. In Figure 24.7, the communication between a client and a server is based on the discrete requests and responses. On the other hand, the communication between a client and a server is based on stream of byes. Can you explain the reason?
34. In Chapter 22, we said that TCP is a connection-oriented protocol that uses a three-way handshaking for connection. Can you find the trace of this handshaking in Figure 24.8?
35. Why do we need the *listen* step in Figure 24.8, but not in Figure 24.7?
36. Iterative client-sever programs using UDP allow only one client at a time. Do you think a client can monopolize a server in the type of transaction? Explain your answer.
37. Do you think a child process can run infinitely? Explain your answer.
38. In Figure 24.7, why do we need a *bind* step in the server side, but not in the client side?
39. What do you think happens to a child server in Figure 24.8 after the child has finished serving a client?

Copyrighted material

CHAPTER 25

Domain Name System (DNS)

To identify an entity, the Internet uses the IP address, which uniquely identifies the connection of a host to the Internet. However, people prefer to use names instead of numeric addresses. Therefore, we need a system that can map a name to an address or an address to a name.

When the Internet was small, mapping was done using a **host file.** The host file had only two columns; one for the name and one for the address. Every host could store the host file on its disk and update it periodically from a master host file. When a program or a user wanted to map a name to an address, the host consulted the host file and found the mapping.

Today, however, it is impossible to have one single host file relate every address to a name, and vice versa. The host file would be too large to store in every host. In addition, it would be impossible to update all the host files in the world every time there is a change.

One solution would be to store the entire host file in a single computer and allow access to this centralized information to every computer that needs a mapping. But we know that this would create a huge amount of traffic on the Internet.

Another solution, the one used today, is to divide this huge amount of information into smaller parts and store each part on a different computer. In this method, the host that needs mapping can contact the closest computer holding the needed information. This method is used by the **Domain Name System (DNS).** In this chapter, we first discuss the concepts and ideas behind the DNS. We then describe the DNS protocol itself.

25.1 NAME SPACE

To be unambiguous, the names assigned to machines must be carefully selected from a **name space** with complete control over the binding between the names and IP addresses. In other words, the names must be unique because the addresses are unique. A name space that maps each address to a unique name can be organized in two ways: flat or hierarchical.

Flat Name Space

In a **flat name space,** a name is assigned to an address. A name in this space is a sequence of characters without structure. The names may or may not have a common

Copyrighted material

section; if they do, it has no meaning. The main disadvantage of a flat name space is that it cannot be used in a large system such as the Internet because it must be centrally controlled to avoid ambiguity and duplication.

Hierarchical Name Space

In a **hierarchical name space,** each name is made of several parts. The first part can define the nature of the organization, the second part can define the name, the third part can define departments, and so on. In this case, the authority to assign and control the name spaces can be decentralized. A central authority can assign the part of the name that defines the nature of the organization and the name. The responsibility for the rest of the name can be given to the organization itself. Suffixes can be added to the name to define host or resources. The management of the organization need not worry that the prefix chosen for a host is taken by another organization because even if part of an address is the same, the whole address is different. For example, assume two colleges and a company call one of their computers *challenger*. The first college is given a name by the central authority such as *fhda.edu*, the second college is given the name *berkeley.edu*, and the company is given the name *smart.com*. When these organizations add the name *challenger* to the name they have already been given, the end result is three distinguishable names: *challenger.fhda.edu*, *challenger.berkeley.edu*, and *challenger.smart.com*. The names are unique without the need to be assigned by a central authority. The central authority controls only part of the name, not the whole name.

25.2 DOMAIN NAME SPACE

To have a hierarchical name space, a **domain name space** was designed. In this design, the names are defined in an inverted-tree structure with the root at the top. The tree can have only 128 levels: level 0 (root) to level 127. Whereas the root glues the whole tree together, each level of the tree defines a hierarchical level (see Fig. 25.1).

Label

Each node in the tree has a label, which is a string with a maximum of 63 characters. The root label is a null string (empty string). DNS requires that children of a node

Figure 25.1 *Domain name space*

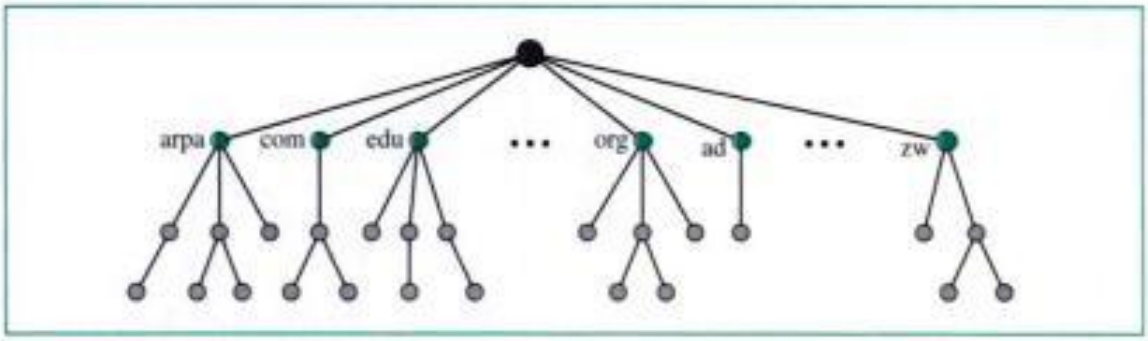

Copyrighted material

(nodes that branch from the same node) have different labels, which guarantees the uniqueness of the domain names.

Domain Name

Each node in the tree has a domain name. A full **domain name** is a sequence of labels separated by dots (.). The domain names are always read from the node up to the root. The last label is the label of the root (null). This means that a full domain name always ends in a null label, which means the last character is a dot because the null string is nothing. Figure 25.2 shows some domain names.

Figure 25.2 *Domain names and labels*

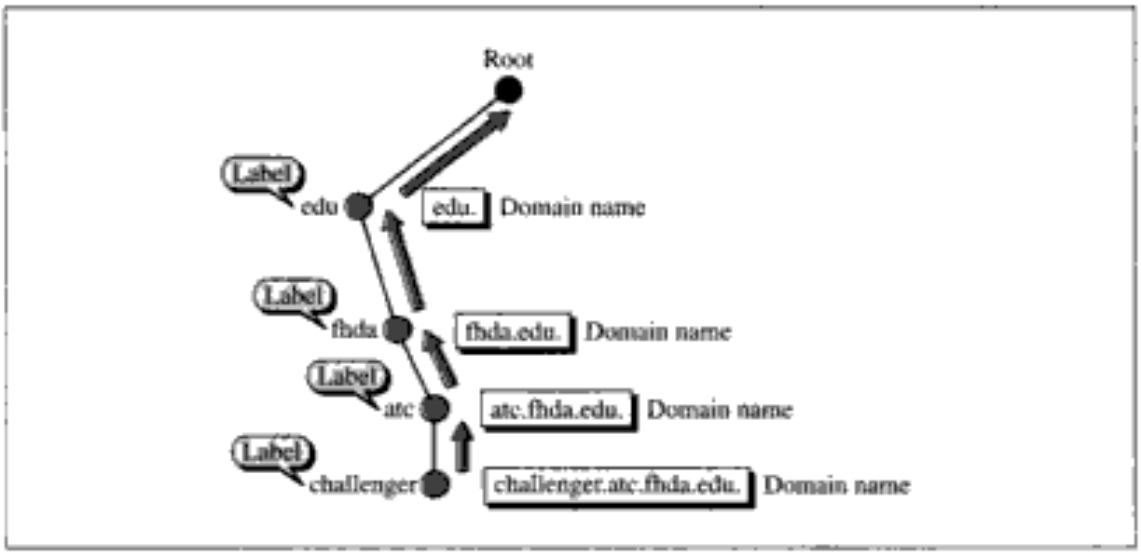

Fully Qualified Domain Name (FQDN)

If a label is terminated by a null string, it is called a **fully qualified domain name (FQDN).** An FQDN is a domain name that contains the full name of a host. It contains all labels, from the most specific to the most general, that uniquely define the name of the host. For example, the domain name

challenger.atc.fhda.edu.

is the FQDN of a computer named *challenger* and installed at the Advanced Technology Center (ATC) at De Anza College. A DNS server can only match an FQDN to an address. Note that the name must end with a null label, but because null here means nothing, the label ends with a dot (.).

Partially Qualified Domain Name (PQDN)

If a label is not terminated by a null string, it is called a **partially qualified domain name (PQDN).** A PQDN starts from a node, but it does not reach the root. It is used when the name to be resolved belongs to the same site as the client. Here the resolver can supply the missing part, called the **suffix,** to create an FQDN. For example, if a

Copyrighted material

user at the fhda.edu. site wants to get the IP address of the challenger computer, he or she can define the partial name

```
challenger
```

The DNS client adds the suffix *atc.fhda.edu.* before passing the address to the DNS server.

The DNS client normally holds a list of suffixes. The following can be some of the list of suffixes at De Anza College.

```
atc.fhda.edu.
fhda.edu.
.
```

Figure 25.3 shows some FQDNs and PQDNs.

Figure 25.3 *FQDN and PQDN*

Domain

A **domain** is a subtree of the domain name space. The name of the domain is the domain name of the node at the top of the subtree. Figure 25.4 shows some domains.

Figure 25.4 *Domains*

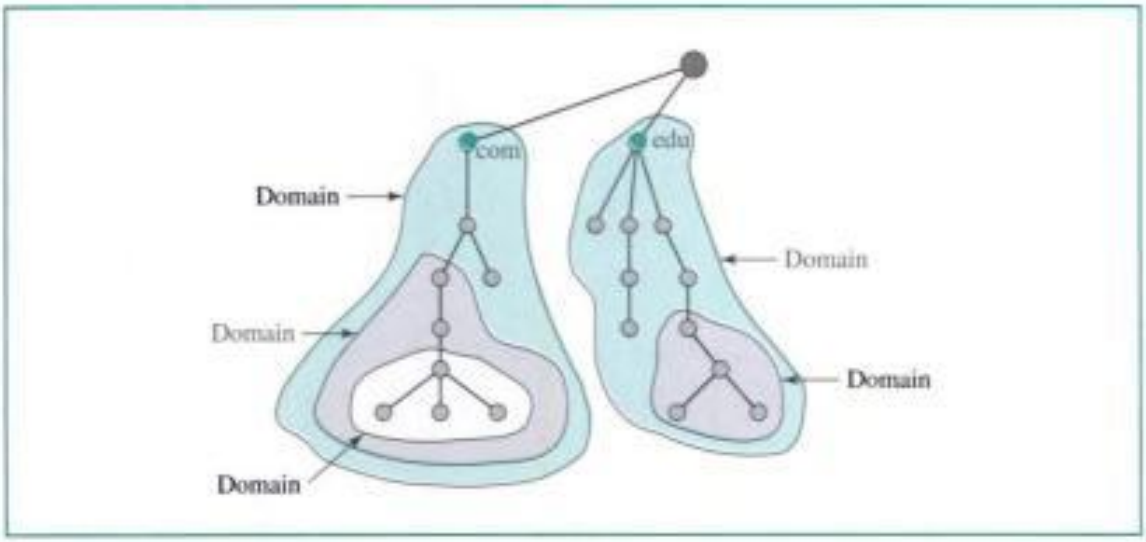

Copyrighted material

Note that a domain may itself be divided into domains, or **subdomains** as they are sometimes called.

25.3 DISTRIBUTION OF NAME SPACE

The information contained in the domain name space must be stored. However, it is very inefficient and also not reliable to have just one computer store such a huge amount of information. It is inefficient because responding to requests from all over the world places a heavy load on the system. It is not reliable because any failure makes the data inaccessible.

Hierarchy of Name Servers

The solution to these problems is to distribute the information among many computers called **DNS servers.** One way to do this is to divide the whole space into many domains based on the first level. In other words, we let the root stand alone and create as many domains (subtrees) as there are first-level nodes. Because a domain created this way could be very large, DNS allows domains to be divided further into smaller domains (subdomains). Each server can be responsible (authoritative) for either a large or a small domain. In other words, we have a hierarchy of servers in the same way that we have a hierarchy of names (see Fig. 25.5).

Figure 25.5 *Hierarchy of name servers*

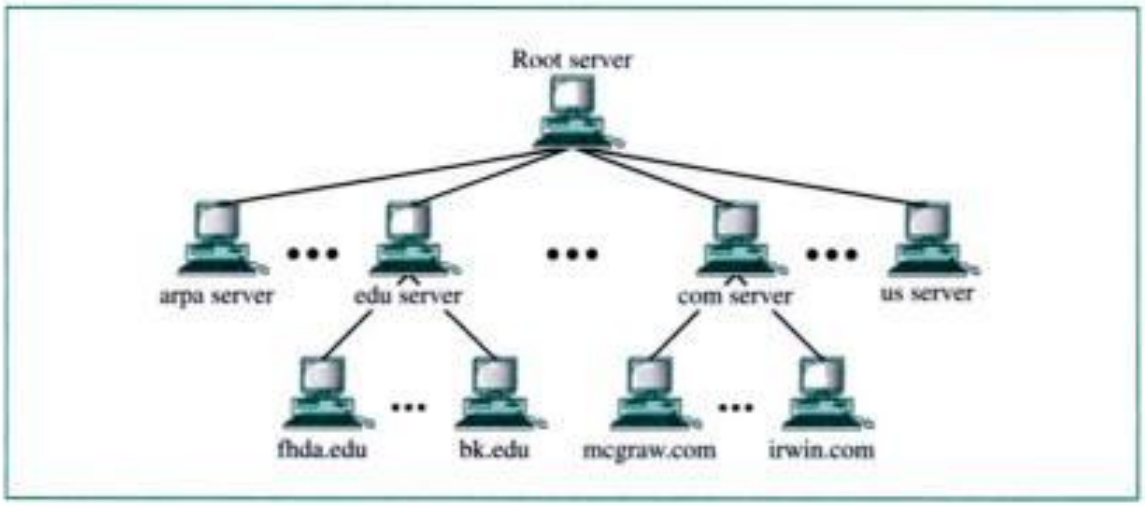

Zone

What a server is responsible for, or has authority over, is called a **zone.** If a server accepts responsibility for a domain and does not divide the domain into smaller domains, the *domain* and the *zone* refer to the same thing. The server makes a database called a *zone file* and keeps all the information for every node under that domain. However, if a server

Copyrighted material

The primary and secondary servers are both authoritative for the zones they serve. The idea is not to put the secondary server at a lower level of authority, but to create redundancy for the data so that if one server fails, the others can continue serving clients. Note also that a server can be a primary server for a specific zone and a secondary server for another zone. Therefore, when we refer to a server as a primary or secondary server, we should be careful to which zone we refer.

A primary server loads all information from the disk file; the secondary server loads all information from the primary server.

25.4 DNS IN THE INTERNET

DNS is a protocol that can be used in different platforms. In the Internet, the domain name space (tree) is divided into three different sections: generic domains, country domains, and inverse domain (see Fig. 25.7).

Figure 25.7 *DNS in the Internet*

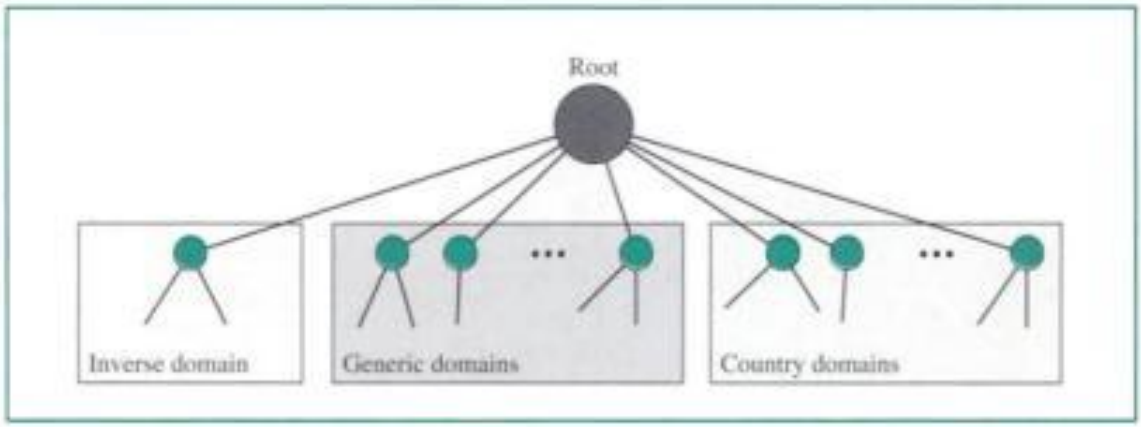

Generic Domains

The **generic domains** define registered hosts according to their generic behavior. Each node in the tree defines a domain, which is an index to the domain name space database (see Fig. 25.8).

Looking at the tree, we see that the first level in the generic domains section allows seven possible three-character labels. These labels describe the organization types as listed in Table 25.1.

Recently a few more first-level labels have been approved; these are shown in Table 25.2.

Copyrighted material

Figure 25.8 *Generic domains*

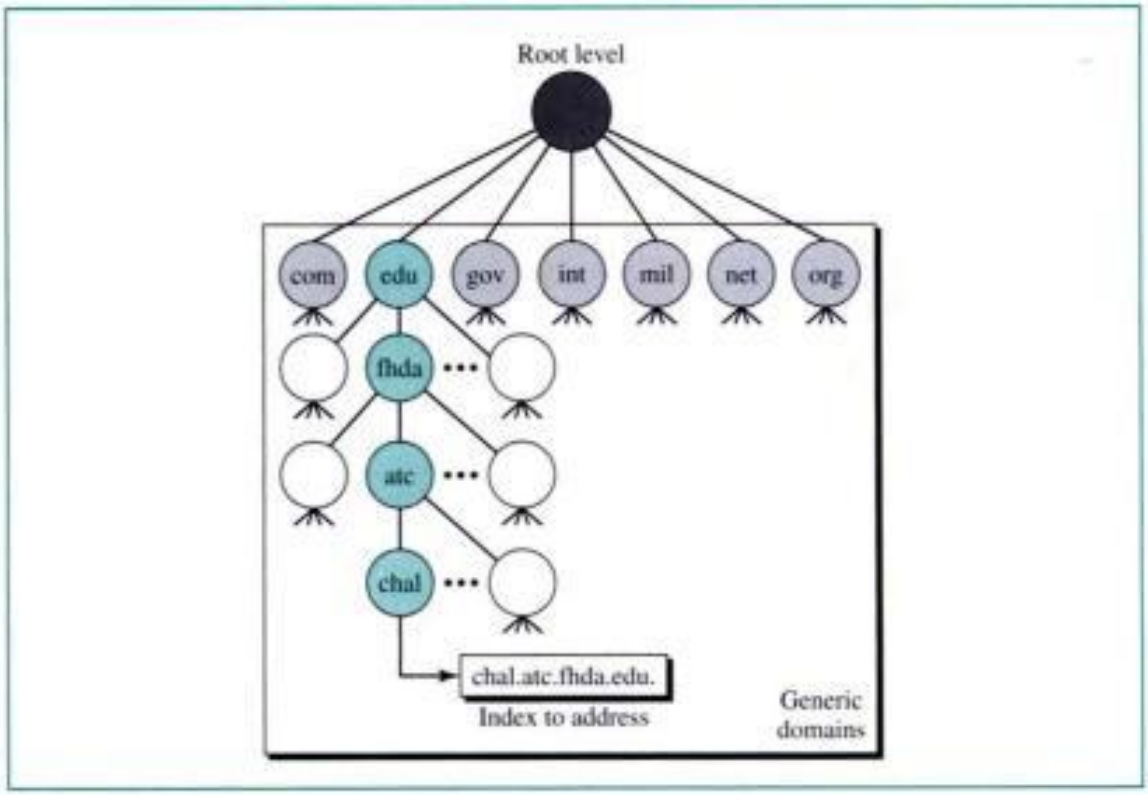

Table 25.1 *Generic domain labels*

Label	*Description*
com	Commercial organizations
edu	Educational institutions
gov	Government institutions
int	International organizations
mil	Military groups
net	Network support centers
org	Nonprofit organizations

Table 25.2 *New generic domain labels*

Label	*Description*
aero	Airlines and aerospace companies
biz	Businesses or firms (similar to com)
coop	Cooperative business organizations
info	Information service providers
museum	Museums and other nonprofit organizations
name	Personal names (individuals)
pro	Professional individual organizations

Copyrighted material

Country Domains

The **country domains** section follows the same format as the generic domains but uses two-character country abbreviations (e.g., *us* for United States) in place of the three-character organizational abbreviations at the first level. Second-level labels can be organizational, or they can be more specific, national designations. The United States, for example, uses state abbreviations as a subdivision of the country domain *us* (e.g., *ca.us.*).

Figure 25.9 shows the country domains section. The address *anza.cup.ca.us* can be translated to De Anza College in Cupertino in California in the United States.

Figure 25.9 *Country domains*

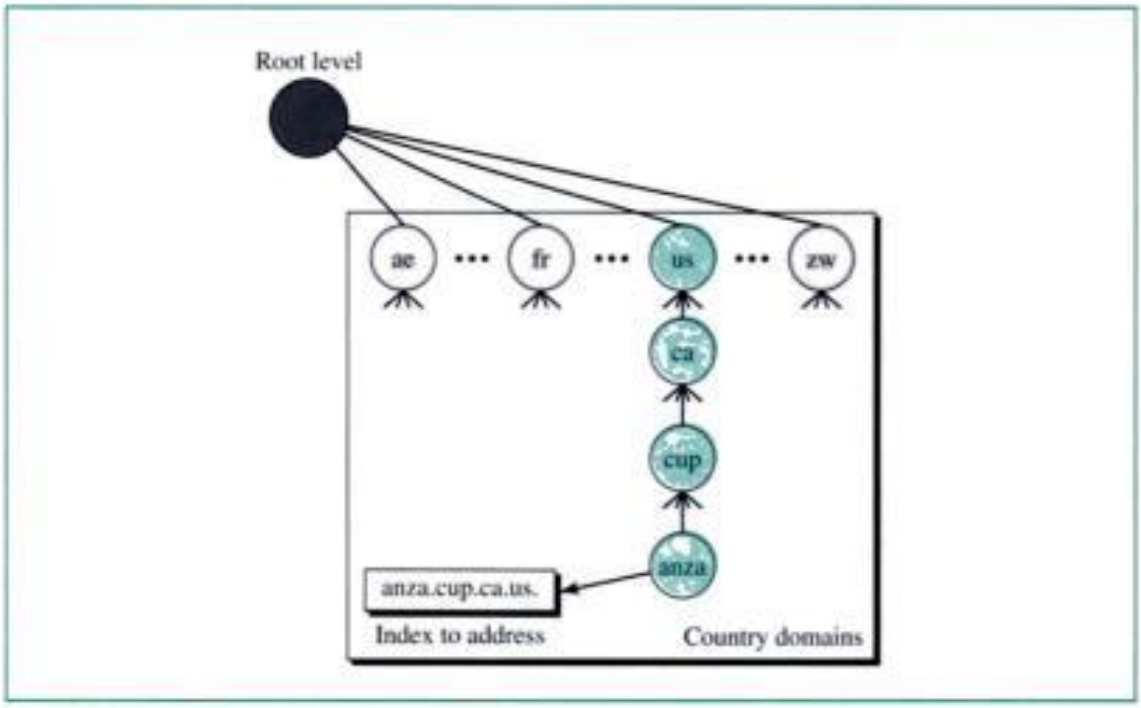

Inverse Domain

The **inverse domain** is used to map an address to a name. This may happen, for example, when a server has received a request from a client to do a task. Whereas the server has a file that contains a list of authorized clients, the server lists only the IP address of the client (extracted from the received IP packet). To determine if the client is on the authorized list, the server can send a query to the inverse DNS server and ask for a mapping of address to name.

This type of query is called an *inverse* or *pointer* (PTR) query. To handle a pointer query, the inverse domain is added to the domain name space with the first-level node called *arpa* (for historical reasons). The second level is also one single node named *in-addr* (for inverse address). The rest of the domain defines IP addresses.

The servers that handle the inverse domain are also hierarchical. This means the netid part of the address should be at a higher level than the subnetid part, and the subnetid part higher than the hostid part. In this way, a server serving the whole site is at a higher level than the servers serving each subnet. This configuration makes the

Copyrighted material

Mapping Names to Addresses

Most of the time, the resolver gives a domain name to the server and asks for the corresponding address. In this case, the server checks the generic domains or the country domains to find the mapping.

If the domain name is from the generic domains section, the resolver receives a domain name such as *chal.atc.fhda.edu.*. The query is sent by the resolver to the local DNS server for resolution. If the local server cannot resolve the query, it either refers the resolver to other servers or asks other servers directly.

If the domain name is from the country domains section, the resolver receives a domain name such as *ch.fhda.cu.ca.us.*. The procedure is the same.

Mapping Addresses to Names

A client can send an IP address to a server to be mapped to a domain name. As mentioned before, this is called a PTR query. To answer queries of this kind, DNS uses the inverse domain. However, in the request, the IP address is reversed, and two labels, *in-addr* and *arpa*, are appended to create a domain acceptable by the inverse domain section. For example, if the resolver receives the IP address 132.34.45.121, the resolver first inverts the address and then adds the two labels before sending. The domain name sent is *121.45.34.132.in-addr.arpa.*, which is received by the local DNS and resolved.

Recursive Resolution

The client (resolver) can ask for a recursive answer from a name server. This means that the resolver expects the server to supply the final answer. If the server is the authority for the domain name, it checks its database and responds. If the server is not the authority, it sends the request to another server (the parent usually) and waits for the response. If the parent is the authority, it responds; otherwise, it sends the query to yet another server. When the query is finally resolved, the response travels back until it finally reaches the requesting client. This is, **recursive resolution,** shown in Figure 25.11.

Figure 25.11 *Recursive resolution*

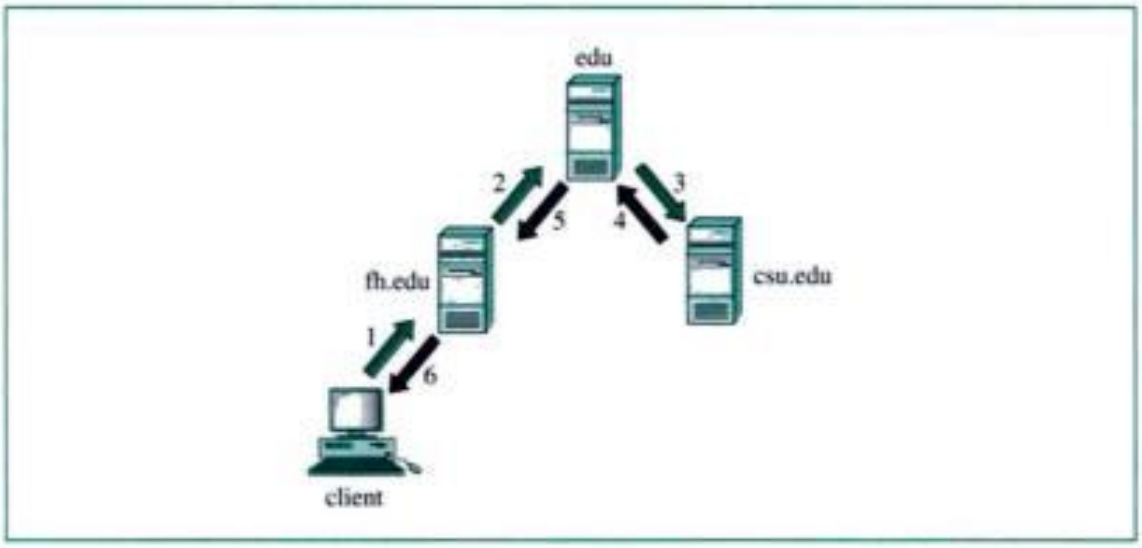

Copyrighted material

Iterative Resolution

If the client does not ask for a recursive answer, the mapping can be done iteratively. If the server is an authority for the name, it sends the answer. If it is not, it returns (to the client) the IP address of the server that it thinks can resolve the query. The client is responsible for repeating the query to this second server. If the newly addressed server can resolve the problem, it answers the query with the IP address; otherwise, it returns the IP address of a new server to the client. Now the client must repeat the query to the third server. This process is called **iterative resolution** because the client repeats the same query to multiple servers. In Figure 25.12 the client queries three servers before it gets an answer from the *csu.edu* server.

Figure 25.12 *Iterative resolution*

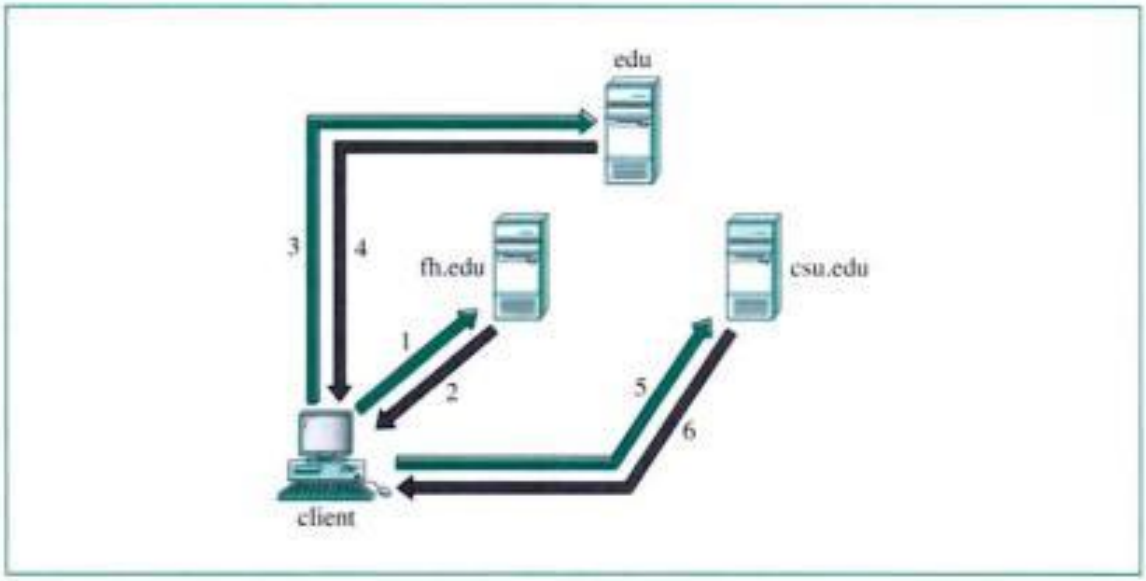

Caching

Each time a server receives a query for a name that is not in its domain, it needs to search its database for a server IP address. Reduction of this search time would increase efficiency. DNS handles this with a mechanism called **caching.** When a server asks for a mapping from another server and receives the response, it stores this information in its cache memory before sending it to the client. If the same or another client asks for the same mapping, it can check its cache memory and resolve the problem. However, to inform the client that the response is coming from the cache memory and not from an authoritative source, the server marks the response as *unauthoritative*.

Caching speeds up resolution, but it can also be problematic. If a server caches a mapping for a long time, it may send an outdated mapping to the client. To counter this, two techniques are used. First, the authoritative server always adds a piece of information to the mapping called *time-to-live (TTL)*. It defines the time in seconds for which the receiving server can cache the information. After that time, the mapping is invalid and any query must be sent again to the authoritative server. Second, DNS requires that each server keep a TTL counter for each mapping it caches. The cache memory must be searched periodically, and those mappings with an expired TTL must be purged.

Copyrighted material

25.6 DNS MESSAGES

DNS has two types of messages: query and response. Both types have the same format. The **query message** consists of a header and the question records; the **response message** consists of a header, question records, answer records, authoritative records, and additional records (see Fig. 25.13).

Figure 25.13 *Query and response messages*

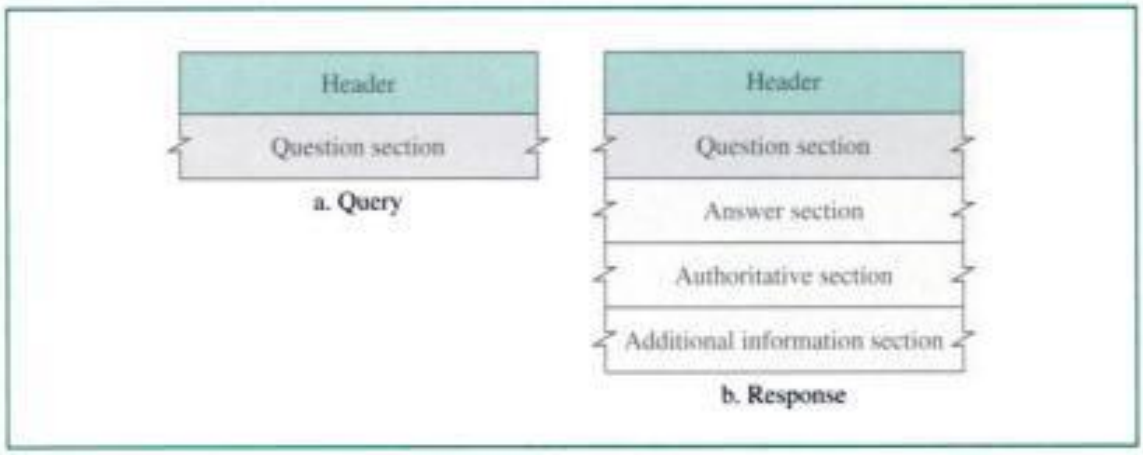

Header

Both query and response messages have the same header format with some fields set to zero for the query messages. The header is 12 bytes, and its format is shown in Figure 25.14.

Figure 25.14 *Header format*

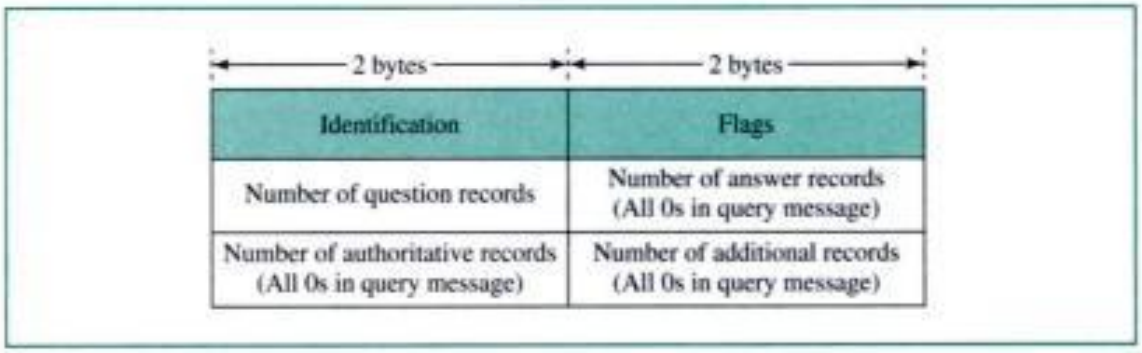

The *identification* is used by the client to match the response with the query. The client uses a different identification number each time it sends a query. The server duplicates this number in the corresponding response. *Flags* is a collection of subfields that define the type of the message, the type of answers requested, the type of desired resolution (recursive or iterative), and so on. *Number of question records* contains the number of queries in the question section of the message. *Number of answer records* contains the number of answer records in the answer section of the response message. Its value is zero in the query

Copyrighted material

message. *Number of authoritative records* contains the number of authoritative records in the authoritative section of a response message. Its value is zero in the query message. Finally *Number of additional records* contains the number of additional records in the additional section of a response message. Its value is zero in the query message.

Question Section

This is a section consisting of one or more question records. It is present on both query and response messages.

Answer Section

This is a section consisting of one or more resource records. It is present only on response messages. This section includes the answer from the server to the client (resolver).

Authoritative Section

This is a section consisting of one or more resource records. It is present only on response messages. This section gives information (domain name) about one or more authoritative servers for the query.

Additional Information Section

This is a section consisting of one or more resource records. It is present only on response messages. This section provides additional information that may help the resolver. For example, a server may give the domain name of an authoritative server to the resolver in the authoritative section, and may include the IP address of the same authoritative server in the additional information section.

25.7 DDNS

When the DNS was designed, no one predicted that there would be so many changes made to addresses. In DNS, when there is a change, such as adding a new host, removing a host, or changing an IP address, the change must be made to the DNS master file. These types of changes involve a lot of manual updating. The size of today's Internet does not allow this kind of manual operation.

The DNS master file must be updated dynamically. The **Dynamic Domain Name System (DDNS)** therefore has been devised to respond to this need. In DDNS, when a binding between a name and an address is determined, the information is sent, usually by DHCP (see Chapter 19) to a primary DNS server. The primary server updates the zone. The secondary servers are notified either actively or passively. In active notification, the primary server sends a message to the secondary servers about the change in the zone, whereas in passive notification, the secondary servers periodically check for any changes. In either case, after being notified about the change, the secondary requests information about the entire zone (zone transfer).

To provide security and prevent unauthorized changes in the DNS records, DDNS can use an authentication mechanism.

Copyrighted material

18. In address-to-name resolution the _____ domain is used.
    a. Inverse
    b. Reverse
    c. Generic
    d. Country
19. How is the lifetime of a name-to-address resolution in cache memory controlled?
    a. By the time-to-live field set by the server
    b. By the time-to-live counter set by the server
    c. By the time-to-live field set by the authoritative server
    d. (b) and (c)
20. In the string 219.46.123.107.in-addr.arpa, what is the network address of the host we are looking for?
    a. 219.46.123.0
    b. 107.123.0.0
    c. 107.123.46.0
    d. 107.0.0.0
21. A host with the domain name *pit.arc.nasa.gov.* is on the _____ level of the DNS hierarchical tree. (The root is level 1.)
    a. Third
    b. Fourth
    c. Fifth
    d. Not enough information given
22. A host with the domain name *trinity.blue.vers.inc* is on the _____ level of the DNS hierarchical tree. (The root is level 1.)
    a. Third
    b. Fourth
    c. Fifth
    d. Not enough information given
23. A DNS _____ server gets its data from another DNS server.
    a. Primary
    b. Secondary
    c. Root
    d. All the above
24. A DNS _____ server creates, maintains, and updates the zone file.
    a. Primary
    b. Secondary
    c. Root
    d. All the above
25. A DNS _____ server's zone is the entire DNS tree.
    a. Primary
    b. Secondary

Copyrighted material

CHAPTER 26

Electronic Mail (SMTP) and File Transfer (FTP)

There are two popular applications for exchanging information. Electronic mail exchanges information between people; file transfer exchanges files between computers. In this chapter, we discuss these applications.

26.1 ELECTRONIC MAIL

One of the most popular network services is electronic mail (email). Electronic mail is used for sending a single message that includes text, voice, video, or graphics to one or more recipients. **Simple Mail Transfer Protocol (SMTP)** is the standard mechanism for electronic mail in the Internet.

Sending Mail

To send mail, the user creates mail that looks very similar to postal mail. It has an **envelope** and a **message** (see Fig. 26.1).

Figure 26.1 *Format of an email*

Copyrighted material

Envelope

The envelope usually contains the sender address, the receiver address, and other information.

Message

The message contains the *headers* and the *body*. The **headers** of the message define the sender, the receiver, the subject of the message, and other information. The body of the message contains the actual information to be read by the recipient.

Receiving Mail

The email system periodically checks the mailboxes. If a user has mail, it informs the user with a notice. If the user is ready to read the mail, a list is displayed in which each line contains a summary of the information about a particular message in the mailbox. The summary usually includes the sender mail address, the subject, and the time the mail was sent or received. The user can select any of the messages and display its contents on the screen.

Addresses

To deliver mail, a mail handling system must use an addressing system with unique addresses. The addressing system used by SMTP consists of two parts: a *local part* and a *domain name*, separated by an @ sign (see Fig. 26.2).

Figure 26.2 *Email address*

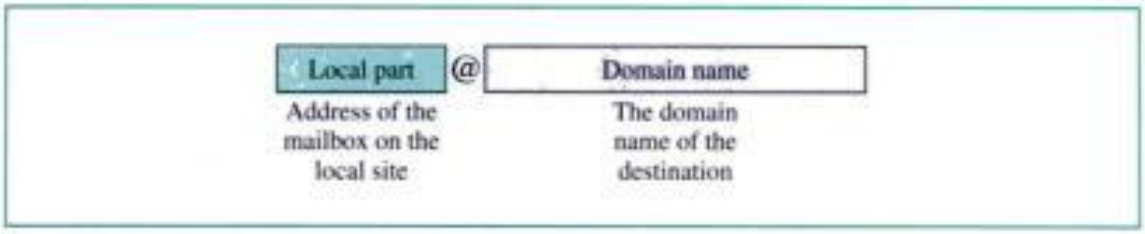

Local Part

The local part defines the name of a special file, called the user mailbox, where all the mail received for a user is stored for retrieval by the user agent.

Domain Name

The second part of the address is the **domain name.** An organization usually selects one or more hosts to receive and send email; they are sometimes called *mail exchangers*. The domain name assigned to each mail exchanger either comes from the DNS database or is a logical name (e.g., the name of the organization).

Copyrighted material

User Agent (UA)

The first component of an electronic mail system is the **user agent (UA).** A user agent sometimes is called a *mail reader*, but the terminology is confusing; we prefer to use the term *user agent* instead.

Services Provided by a User Agent

A user agent is a software package (program) that composes, reads, replies to, and forwards messages. It also handles mailboxes. Figure 26.3 shows the services of a typical user agent.

Figure 26.3 *User agent*

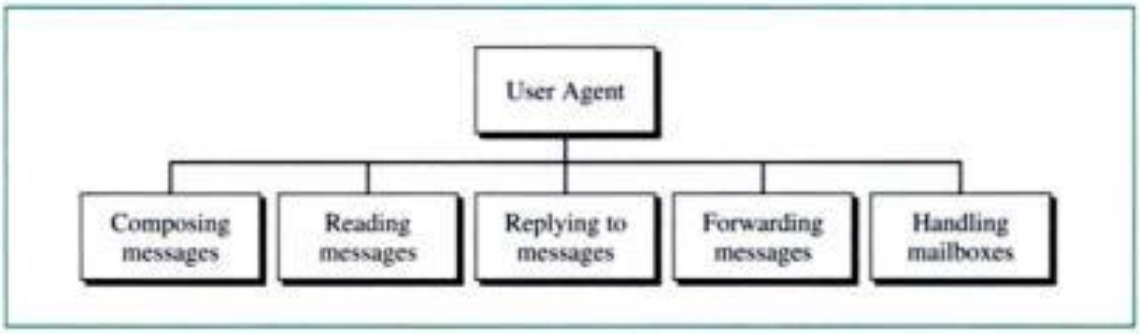

Composing Messages A user agent is responsible for composing the email message to be sent out. Most user agents provide a template on the screen to be filled in by the user. Some even have a built-in editor that can do spell checking, grammer checking, and other tasks one expects from a sophisticated word processor. A user, of course, can use her or his favorite text editor or word processor to create the message and import it, or cut and paste, into the user agent.

Reading Messages The second duty of the user agent is to read the incoming messages. When a user invokes a user agent, it first checks the mail in the incoming mailbox. Most user agents show a one-line summary of each received mail which contain the following fields.

1. A number field.
2. A flag field that shows if the mail is new, already read but not replied to, read and replied to, and so on.
3. The size of the message.
4. The sender.
5. The subject field if the subject line in the message is not empty.

Replying to Messages After reading a message, a user can use the user agent to reply to a message. Normally, a user agent allows the user to reply to the original sender or to reply to all recipients of the message. The reply message normally contains the original message (for quick reference) and the new message.

Copyrighted material

side receives the ASCII data and delivers them to MIME to be transformed to the original data.

We can think of MIME as a set of software functions that transform non-ASCII data to ASCII data and vice versa (see Fig. 26.4).

Figure 26.4 *MIME*

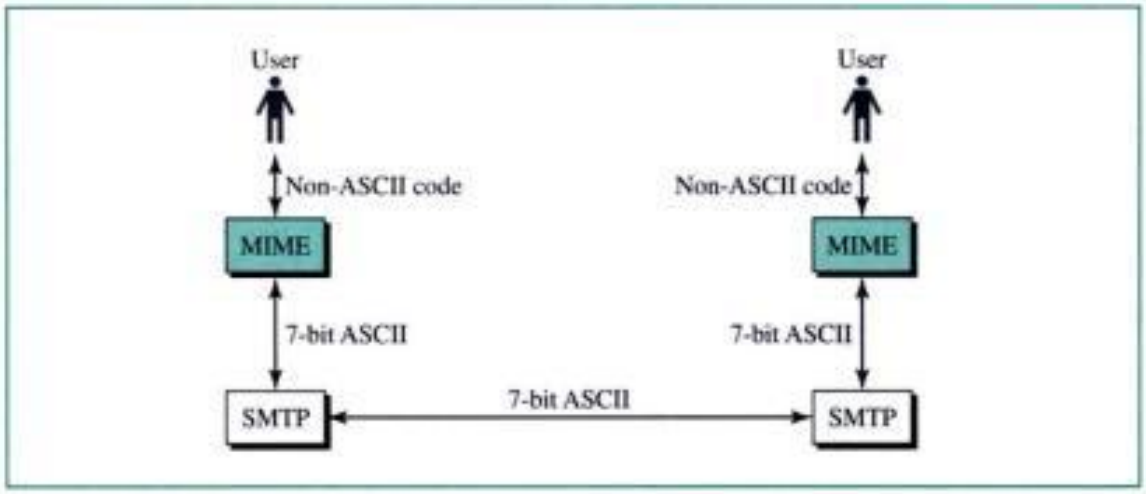

MIME defines five headers that can be added to the original SMTP header section to define the transformation parameters:

1. MIME-Version
2. Content-Type
3. Content-Transfer-Encoding
4. Content-Id
5. Content-Description

Figure 26.5 shows the original header and the extended header. We will describe each header in detail.

Figure 26.5 *MIME header*

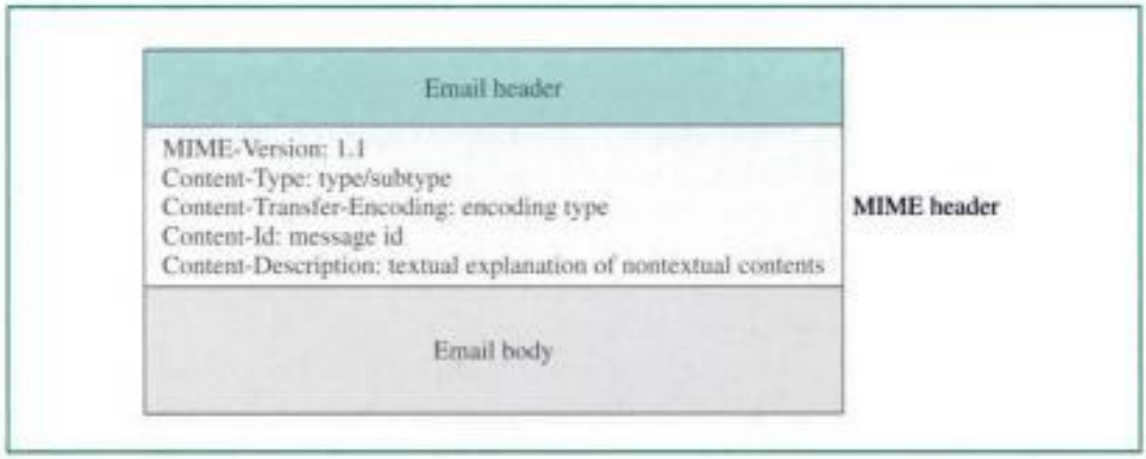

Copyrighted material

parallel subtype is similar to the mixed subtype, except that the order of the parts is unimportant. The digest subtype is also similar to the mixed subtype except that the default type/subtype is message/RFC822 as defined below. In the alternative subtype, the same message is repeated using different formats. The following is an example of a multipart message using a mixed subtype:

```
Content-Type: multipart/mixed; boundary=xxxx

    --xxxx
    Content-Type: text/plain;
    ..............................................
    --xxxx
    Content-Type: image/gif;
    ..............................................
    --xxxx--
```

- **Message.** In the message type, the body is itself a whole mail message, a part of a mail message, or a pointer to a message. Three subtypes are currently used: *RFC822, partial,* or *external-body.* The subtype RFC822 is used if the body is encapsulating another message (including header and the body). The subtype partial is used if the original message has been fragmented into different mail messages and this mail message is one of the fragments. The fragments must be reassembled at the destination by MIME. Three parameters must be added: *id, number,* and the *total.* The id identifies the message and is present in all the fragments. The number defines the sequence order of the fragment. The total defines the number of fragments that comprise the original message. The following is an example of a message with three fragments:

```
    Content-Type: message/partial;
    id="forouzan@challenger.atc.fhda.edu";
    number=1;
    total=3;

    ........................
    ........................
```

The external-body subtype indicates that the body does not contain the actual message but is only a reference (pointer) to the original message. The parameters following the subtype define how to access the original message. The following is an example:

```
    Content-Type: message/external-body;
    name="report.txt";
    site="fhda.edu";
    access-type="ftp";

    ........................
    ........................
```

Copyrighted material

Figure 26.7 *Quoted-printable*

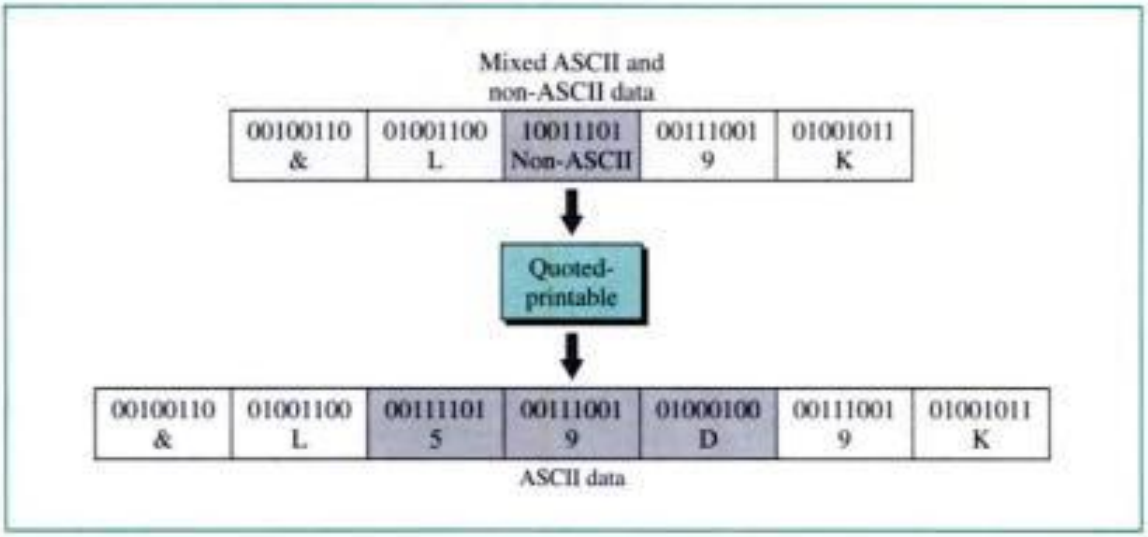

Content-Id

This header uniquely identifies the whole message in a multiple-message environment.

```
Content-Id: id=<content-id>
```

Content-Description

This header defines whether the body is image, audio, or video.

```
Content-Description:  <description>
```

Mail Transfer Agent (MTA)

The actual mail transfer is done through **mail transfer agents (MTAs).** To send mail, a system must have a client MTA; and to receive mail, a system must have a server MTA.

In the Internet, message transfer is done through a protocol (and software) named Simple Mail Transfer Protocol (SMTP). To send a message, we need a client SMTP and a server SMTP. In Figure 26.8 we show Alice sending an email to Bob with the SMTP clients and servers needed.

Note that mail transfer occurs between the two mail servers, one at Alice's site and the other at Bob's site. The mail servers can belong to the ISPs to which Alice and Bob are subscribers, or they can belong to the companies where Alice and Bob work.

Commands and Responses

SMTP uses commands and responses to transfer messages between an MTA client and an MTA server (see Fig. 26.9). Each command or reply is terminated by a two-character (carriage return and line feed) end-of-line token.

Copyrighted material

Figure 26.10 *Email delivery*

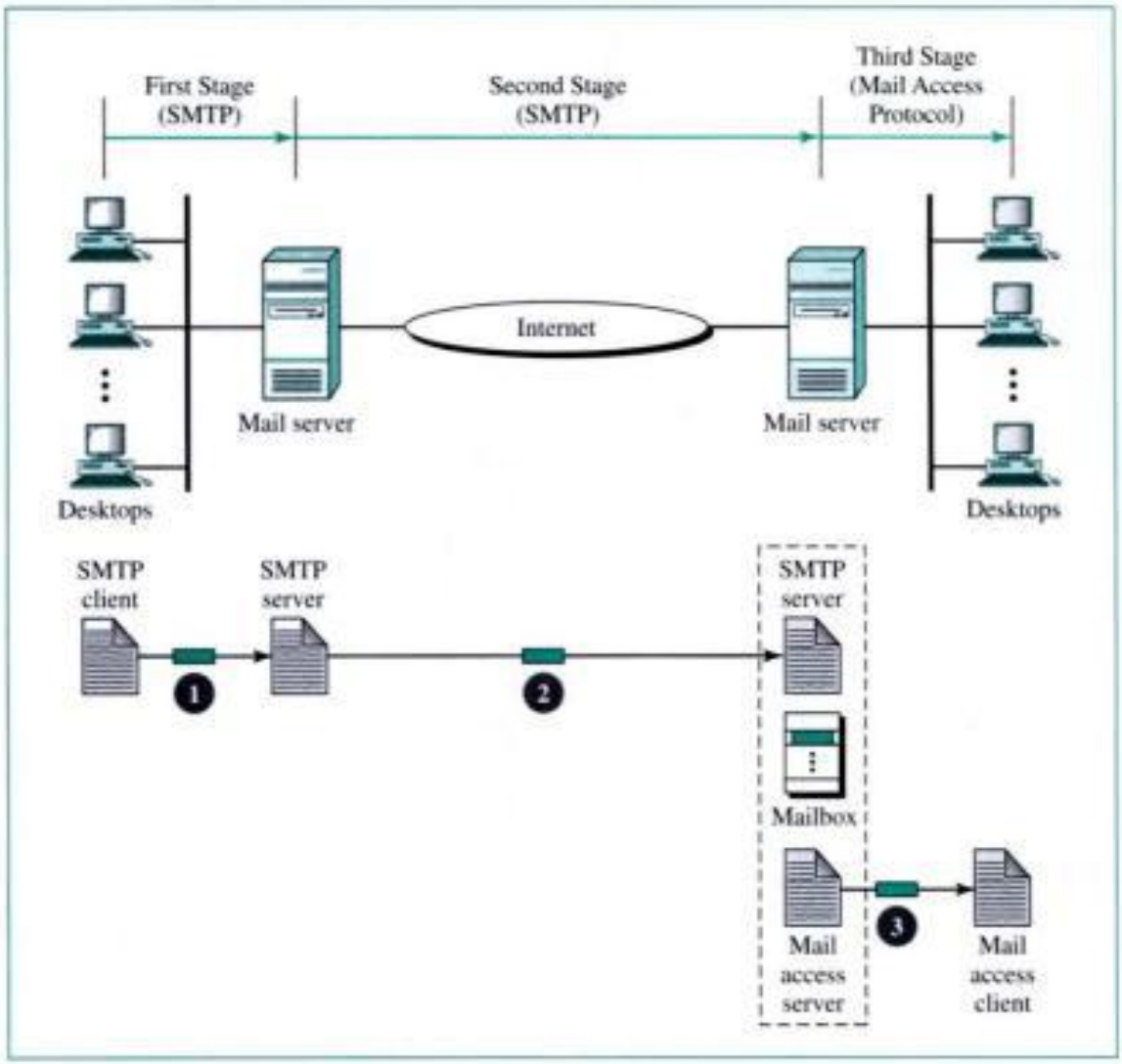

First Stage

In the first stage, the email goes from the user agent to the local server. The mail does not go directly to the remote server because the remote server may not be available at all times. Therefore, the mail is stored in the local server until it can be sent. The user agent uses SMTP client software, and the local server uses SMTP server software.

Second Stage

In the second stage, the email is relayed by the local server, which now acts as the SMTP client, to the remote server, which is the SMTP server in this stage. The email is delivered to the remote server, not to the remote user agent. The reason is that SMTP messages must be received by a server that is always running since mail can arrive at any time. However, people often turn off their computers at the end of the day, and those with laptops or mobile computers do not normally have them on all the time. So usually an organization (or an ISP) assigns a computer to be the email server and run the SMTP server program. The email is received by this mail server and stored in the mailbox of the user for later retrieval.

Copyrighted material

Third Stage

In the third stage, the remote user agent uses a mail access protocol such as POP3 or IMAP4 (both discussed in the next section) to access the mailbox and obtain the mail.

Mail Access Protocols

The first and the second stages of mail delivery use SMTP. However, SMTP is not involved in the third stage because SMTP is a *push* protocol; it pushes the message from the sender to the receiver even if the receiver does not want it. The operation of SMTP starts with the sender, not the receiver. On the other hand, the third stage needs a *pull* protocol; the operation must start with the recipient. The mail must stay in the mail server mailbox until the recipient retrieves it. The third stage uses a **mail access protocol.**

Currently two mail access protocols are available: Post Office Protocol, version 3 (POP3) and Internet Mail Access Protocol, version 4 (IMAP4).

POP3

Post Office Protocol, version 3 (POP3) is simple, but it is limited in functionality. The client POP3 software is installed on the recipient computer; the server POP3 software is installed on the mail server.

Mail access starts with the client when the user needs to download email from the mailbox on the mail server. The client (user agent) opens a connection with the server on TCP port 110. It then sends its user name and password to access the mailbox. The user can then list and retrieve the mail messages, one by one. Figure 26.11 shows an example of downloading using POP3.

Figure 26.11 *POP3*

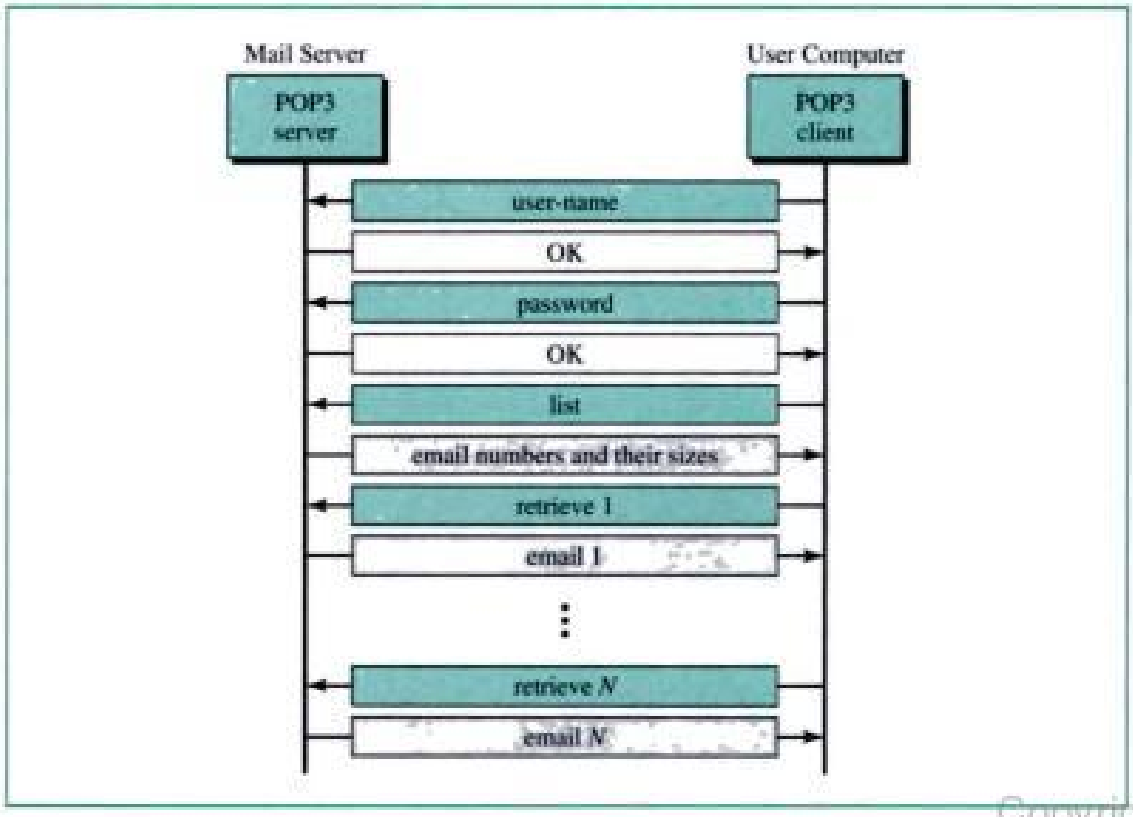

Copyrighted material

commands and responses. This simple method is adequate for the control connection because we send one command (response) at a time. Each command or response is only one short line, so we need not worry about file format or file structure. Each line is terminated with a two-character (carriage return and line feed) end-of-line token.

Communication over Data Connection

The purpose and implementation of the data connection are different from those of the control connection. We want to transfer files through the data connection. The client must define the type of file to be transferred, the structure of the data, and the transmission mode. Before sending the file through the data connection, we prepare for transmission through the control connection. The heterogeneity problem is solved by defining three attributes of communication: file type, data structure, and transmission mode (see Fig. 26.14).

Figure 26.14 *Using the data connection*

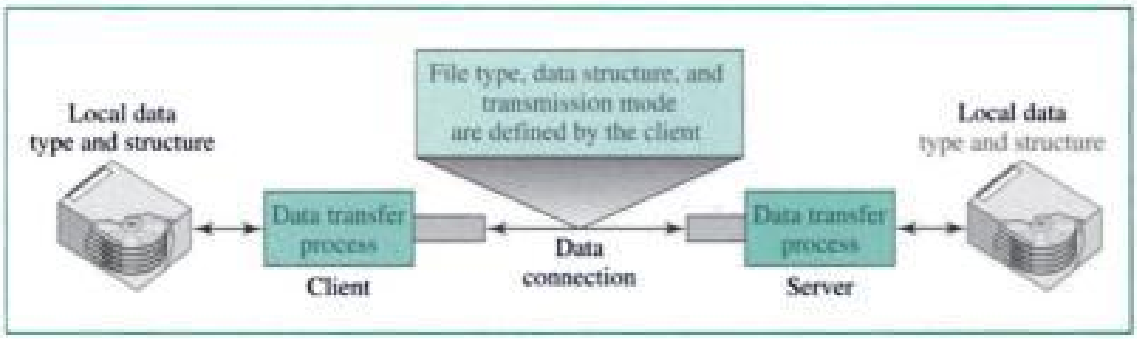

File Type FTP can transfer one of the following file types across the data connection:

- **ASCII file.** This is the default format for transferring text files. Each character is encoded using ASCII. The sender transforms the file from its own representation to ASCII characters, and the receiver transforms the ASCII characters to its own representation.
- **EBCDIC file.** If one or both ends of the connection use EBCDIC encoding (used in IBM computers) the file can be transferred using EBCDIC encoding.
- **Image file.** This is the default format for transferring binary files. The file is sent as continuous streams of bits without any interpretation or encoding. This is mostly used to transfer binary files such as compiled programs or images encoded as 0s and 1s.

If the file is encoded in ASCII or EBCDIC, another attribute must be added to define the printability of the file.

1. **Nonprint.** This is the default format for transferring a text file. The file contains no vertical specifications for printing. This means that the file cannot be printed without further processing because there are no characters to be interpreted for vertical movement of the print head. This format is used for files that will be stored and processed later.

Copyrighted material

2. **TELNET.** In this format the file contains ASCII vertical characters such as CR (carriage return), LF (line feed), NL (new line), and VT (vertical tab). The file is printable after transfer.

Data Structure FTP can transfer a file across the data connection by using one of the following interpretations about the structure of the data:

- **File structure (default).** The file has no structure. It is a continuous stream of bytes.
- **Record structure.** The file is divided into records (or structs in C). This can be used only with text files.
- **Page structure.** The file is divided into pages, with each page having a page number and a page header. The pages can be stored or accessed randomly or sequentially.

Transmission Mode FTP can transfer a file across the data connection by using one of the following three transmission modes:

- **Stream mode.** This is the default mode. Data are delivered from FTP to TCP as a continuous stream of bytes. TCP is responsible for chopping data into segments of appropriate size. If the data are simply a stream of bytes (file structure), no end-of-file is needed. End-of-file in this case is the closing of the data connection by the sender. If the data are divided into records (record structure), each record will have a 1-byte end-of-record (EOR) character, and the end of the file will have a 1-byte end-of-file (EOF) character.
- **Block mode.** Data can be delivered from FTP to TCP in blocks. In this case, each block is preceded by a 3-byte header. The first byte is called the *block descriptor;* the next 2 bytes defines the size of the block in bytes.
- **Compressed mode.** If the file is big, the data can be compressed. The compression method normally used is run-length encoding. In this method, consecutive appearances of a data unit are replaced by one occurrence and the number of repetitions. In a text file, this is usually spaces (blanks). In a binary file, null characters are usually compressed.

File Transfer

File transfer occurs over the data connection under the control of the commands sent over the control connection. However, remember that file transfer in FTP means one of three things (see Fig. 26.15).

Figure 26.15 *File transfer*

Copyrighted material

- A file is to be copied from the server to the client. This is called *retrieving a file*.
- A file is to be copied from the client to the server. This is called *storing a file*.
- A list of directory or file names is to be sent from the server to the client. Note that FTP treats a list of directory or file names as a file. It is sent over the data connection.

Example 1

Figure 26.16 shows an example of how a file is stored.

Figure 26.16 *Example 1*

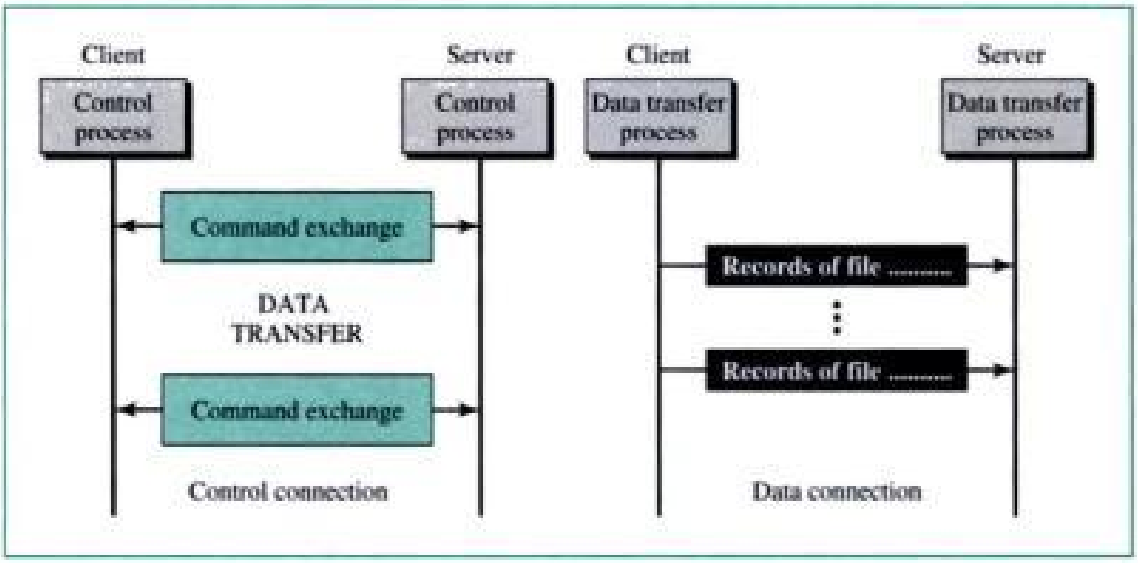

1. The control connection is created, and several control commands and responses are exchanged.
2. Data are transferred record by record.
3. A few commands and responses are exchanged to close the connection.

User Interface

Most operating systems provide a user interface to access the services of FTP. The interface prompts the user for the appropriate input. After the user types a line, the FTP interface reads the line and changes it to the corresponding FTP command. Table 26.4 shows the interface commands provided in UNIX FTP. Some of the commands can be abbreviated as long as there is no ambiguity.

Table 26.4 *List of FTP commands in UNIX*

Commands
!, $, account, append, ascii, bell, binary, bye, case, cd, cdup, close, cr, delete, debug, dir, discount, form, get, glob, hash, help, lcd, ls, macdef, mdelete, mdir, mget, mkdir, mls, mode, mput, nmap, ntrans, open, prompt, proxy, sendport, put, pwd, quit, quote, recv, remotehelp, rename, reset, rmdir, runique, send, status, struct, sunique, tenex, trace, type, user, verbose,?

Copyrighted material

Example 2

We show some of the user interface commands that accomplish the same task as in Example 1. The user input is shown in boldface. As shown below, some of the commands are provided automatically by the interface. The user receives a prompt and provides only the arguments.

```
$ ftp challenger.atc.fhda.edu
Connected to challenger.atc.fhda.edu
220 Server ready
Name: forouzan
Password: xxxxxxx
ftp > ls /usr/user/report
200 OK
150 Opening ASCII mode
...........
...........
226 transfer complete
ftp > close
221 Goodbye
ftp > quit
```

Anonymous FTP

To use FTP, a user needs an account (user name) and a password on the remote server. Some sites have a set of files available for public access. To access these files, a user does not need to have an account or password. Instead, the user can use *anonymous* as the user name and *guest* as the password.

User access to the system is very limited. Some sites allow anonymous users only a subset of commands. For example, most sites allow the user to copy some files, but do not allow navigation through the directories.

Example 3

We show an example of using anonymous FTP. We connect to *internic.net*, where we assume there are some public data available.

```
$ ftp internic.net
Connected to internic.net
220 Server ready
Name: anonymous
331 Guest login OK, send "guest" as password
Password: guest
ftp > pwd
257 '/' is current directory
ftp > ls
200 OK
150 Opening ASCII mode
```

Copyrighted material

```
bin
...
ftp > close
221 Goodbye
ftp > quit
```

26.3 KEY TERMS

anonymous FTP
ASCII file
control connection
data connection
domain name
EBCDIC file
envelope
File Transfer Protocol (FTP)
header
image file
Internet Mail Access Protocol, version 4 (IMAP4)
mail transfer agent (MTA)
message
Multipurpose Internet Mail Extensions (MIME)
Post Office Protocol, version 3 (POP3)
Simple Mail Transfer Protocol (SMTP)
user agent (UA)

26.4 SUMMARY

- The protocol that supports email on the Internet is called Simple Mail Transfer Protocol (SMTP).
- The UA prepares the message, creates the envelope, and puts the message in the envelope.
- The email address consists of two parts: a local address (user mailbox) and a domain name. The form is *localname@domainname*.
- The MTA transfers the email across the Internet.
- SMTP uses commands and responses to transfer messages between an MTA client and an MTA server.
- The steps in transferring a mail message are connection establishment, message transfer, and connection termination.
- Multipurpose Internet Mail Extension (MIME) is an extension of SMTP that allows the transfer of multimedia and other non-ASCII messages.
- Post Office Protocol, version 3 (POP3) and Internet Mail Access Protocol, version 4 (IMAP4) are protocols used by a mail server in conjunction with SMTP to receive and hold email for hosts.
- File transfer protocol (FTP) is a TCP/IP client-server application for copying files from one host to another.
- FTP requires two connections for data transfer: a control connection and a data connection.
- FTP employs ASCII for communication between dissimilar systems.

Copyrighted material

- Prior to the actual transfer of files, the file type, data structure, and transmission mode are defined by the client through the control connection.
- Responses are sent from the server to the client during connection establishment.
- There are three types of file transfer:
  a. A file is copied from the server to the client.
  b. A file is copied from the client to the server.
  c. A list of directories or file names is sent from the server to the client.
- Most operating systems provide a user-friendly interface between FTP and the user.
- Anonymous FTP provides a method for the general public to access files on remote sites.

26.5 PRACTICE SET

Review Questions

1. What is the name of the protocol used for electronic mail over the Internet?
2. What are the two main parts of an email?
3. Describe the addressing system used by SMTP.
4. What is a user agent?
5. What are the two types of user agents?
6. What is MIME?
7. What are the three mail transfer phases?
8. Name two mail access protocols.
9. What is the purpose of FTP?
10. Describe the functions of the two FTP connections.
11. What kinds of file types can FTP transfer?
12. What are the three FTP transmission modes?
13. How does storing a file differ from retrieving a file?
14. What is anonymous FTP?

Multiple-Choice Questions

15. The purpose of the UA is _____.
    a. Message preparation
    b. Envelope creation
    c. Transferral of messages across the Internet
    d. (a) and (b)
16. The purpose of the MTA is _____.
    a. Message preparation
    b. Envelope creation
    c. Transferral of messages across the Internet
    d. (a) and (b)

Copyrighted material

17. Which part of the mail created by the UA contains the sender and receiver names?
    a. Envelope
    b. Address
    c. Header
    d. Body
18. In the email address mackenzie@pit.arc.nasa.gov, what is the domain name?
    a. mackenzie
    b. pit.arc.nasa.gov
    c. mackenzie@pit.arc.nasa.gov
    d. (a) and (b)
19. The _____ field in the MIME header is the type of data and the body of the message.
    a. Content-type
    b. Content-transfer-encoding
    c. Content-Id
    d. Content-description
20. The _____ field in the MIME header uses text to describe the data in the body of the message.
    a. Content-type
    b. Content-transfer-encoding
    c. Content-Id
    d. Content-description
21. The _____ field in the MIME header describes the method used to encode the data.
    a. Content-type
    b. Content-transfer-encoding
    c. Content-Id
    d. Content-description
22. The _____ field in the MIME header has type and subtype subfields.
    a. Content-type
    b. Content-transfer-encoding
    c. Content-Id
    d. Content-description
23. A JPEG image is sent as email. What is the content-type?
    a. Multipart/mixed
    b. Multipart/image
    c. Image/JPEG
    d. Image/basic
24. An email contains a textual birthday greeting, a picture of a cake, and a song. The text must precede the image. What is the content-type?
    a. Multipart/mixed
    b. Multipart/parallel
    c. Multipart/digest
    d. Multipart/alternative

Copyrighted material

CHAPTER 27

HTTP and WWW

The World Wide Web (WWW) has changed the way we live. The public has become aware of the power of the Internet through WWW. In this chapter, we first discuss HTTP, a file transfer protocol specifically designed to facilitate access to the WWW. We then discuss the WWW itself.

27.1 HTTP

The **Hypertext Transfer Protocol (HTTP)** is used mainly to access data on the World Wide Web. The protocol transfers data in the form of plain text, hypertext, audio, video, and so on. It is called the Hypertext Transfer Protocol because it is used in an environment where there are rapid jumps from one document to another.

HTTP functions like a combination of FTP and SMTP. It is similar to FTP because it transfers files and uses the services of TCP. However, it is much simpler than FTP because it uses only one TCP connection (well-known port 80). There is no separate control connection; only data are transferred between the client and the server.

HTTP is like SMTP because the data transferred between the client and the server are similar to SMTP messages. In addition, the format of the messages is controlled by MIME-like headers. However, HTTP differs from SMTP in the way the messages are sent from the client to the server and from the server to the client. Unlike SMTP messages, the HTTP messages are not destined to be read by humans; they are read and interpreted by the HTTP server and HTTP client (browser). SMTP messages are stored and forwarded, but HTTP messages are delivered immediately.

The idea of HTTP is very simple. A client sends a request, which looks like mail, to the server. The server sends the response, which looks like a mail reply to the client. The request and response messages carry data in the form of a letter with a MIME-like format.

The commands from the client to the server are embedded in a letterlike request message. The contents of the requested file or other information are embedded in a letter-like response message.

HTTP uses the services of TCP on well-known port 80.

Copyrighted material

Transaction

Figure 27.1 illustrates the HTTP transaction between the client and server. Although HTTP uses the services of TCP, HTTP itself is a stateless protocol. The client initializes the transaction by sending a request message. The server replies by sending a response.

Figure 27.1 *HTTP transaction*

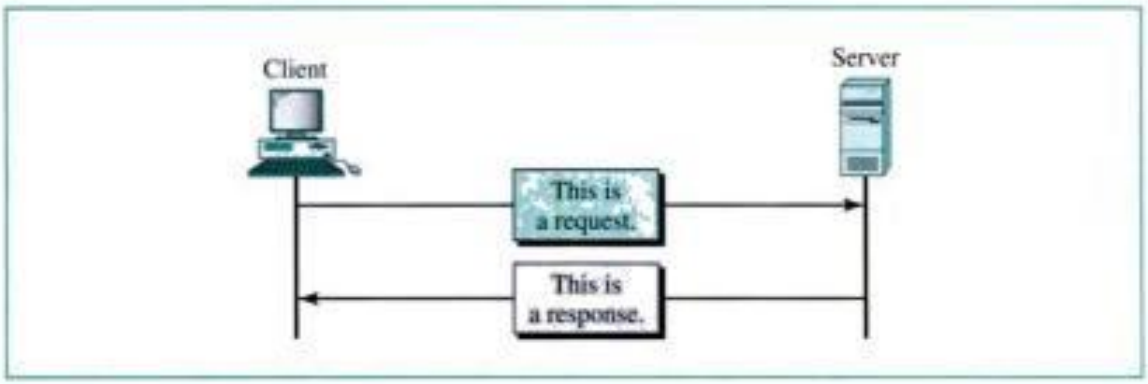

There are two general types of HTTP messages: request and response. Both message types follow almost the same format.

Request Messages

A request message consists of a request line, headers, and sometimes a body. See Figure 27.2.

Figure 27.2 *Request message*

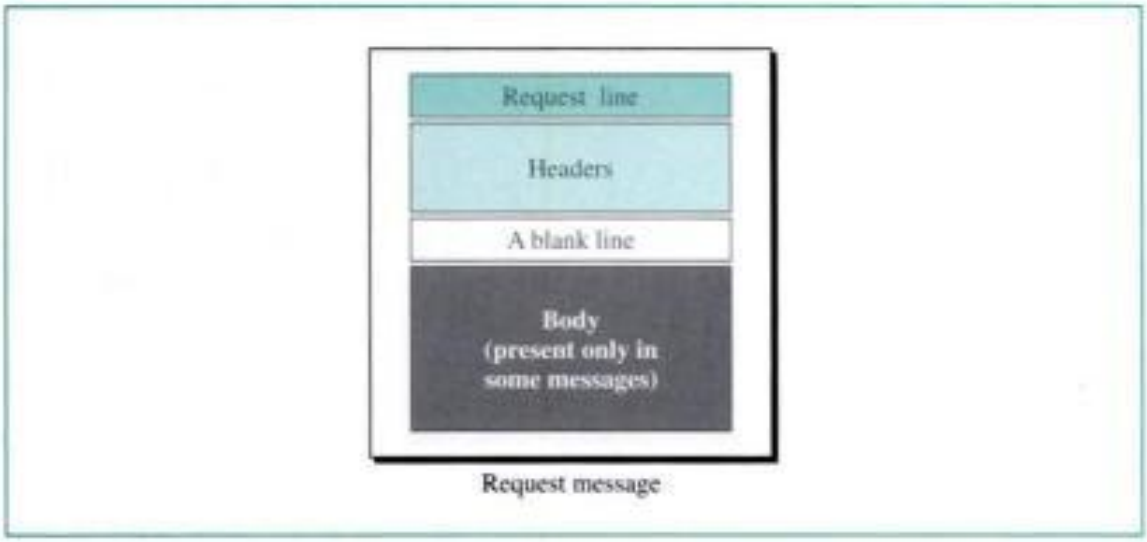

Request Line

The **request line** defines the request type, resource (URL), and HTTP version (see Fig. 27.3).

- **Request type.** In version 1.1 of HTTP, several request types are defined. The request type categorizes the request messages into several methods, which we will discuss later.

Copyrighted material

Figure 27.3 *Request line*

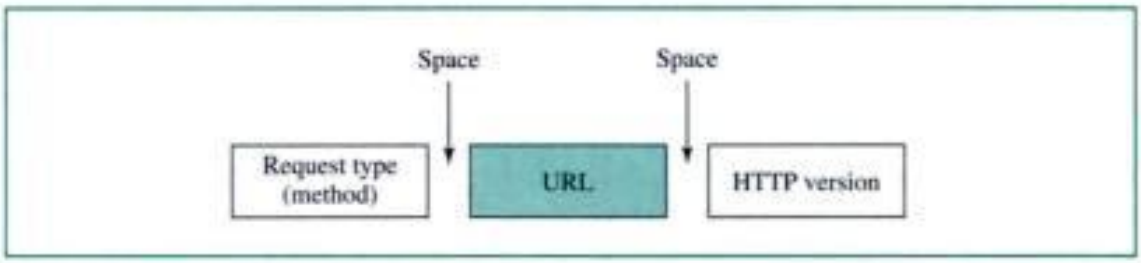

- **Uniform Resource Locator (URL).** A client that wants to access a Web page needs an address. To facilitate the access of documents distributed throughout the world, HTTP uses the concept of uniform resource locators. The URL is a standard for specifying any kind of information on the Internet. The URL defines four things: method, host computer, port, and path (see Fig. 27.4).

Figure 27.4 *URL*

- The *method* is the protocol used to retrieve the document. Several different protocols can retrieve a document; among them are FTP and HTTP. Note that this *method* is distinct from the request type *method*. The former is a protocol; the latter is a function.
- The **host** is the computer where the information is located, although the name of the computer can be an alias. Web pages are usually stored in computers, and computers are given alias names that usually begin with the characters *www*. This is not mandatory, however, as the host can be any name given to the computer that hosts the Web page.
- The URL can optionally contain the port number of the server. If the port is included, it is inserted between the host and the path, and it should be separated from the host by a colon.
- **Path** is the path name of the file where the information is located. Note that the path can itself contain slashes that, in the UNIX operating system, separate the directories from the subdirectories and files.
- **Version.** Although the most current version of HTTP is 1.1, HTTP versions 1.0 and 0.9 are still in use.

Methods

The request type field in a request message defines several kinds of messages referred to as *methods*. The request method is the actual command or request that a client issues to the server. We briefly discuss the purposes of some methods here.

Copyrighted material

GET The GET method is used when the client wants to retrieve a document from the server. The address of the document is defined in the URL; this is the main method for retrieving a document. The server usually responds with the contents of the document in the body of the response message unless there is an error.

HEAD The HEAD method is used when the client wants some information about a document but not the document itself. It is similar to GET, but the response from the server does not contain a body.

POST The POST method is used by the client to provide some information to the server. For example, it can be used to send input to a server.

PUT The PUT method is used by the client to provide a new or replacement document to be stored on the server. The document is included in the body of the request and stored in the location defined by the URL.

PATCH PATCH is similar to PUT except that the request contains a list of differences that should be implemented in the existing file.

COPY The COPY method copies a file to another location. The location of the source file is given in the request line (URL); the location of the destination is given in the entity header (discussed in the "Header" section).

MOVE The MOVE method moves a file to another location. The location of the source file is given in the request line (URL); the location of the destination is given in the entity header.

DELETE The DELETE method removes a document on the server.

LINK The LINK method creates a link or links from a document to another location. The location of the file is given in the request line (URL); the location of the destination is given in the entity header.

UNLINK The UNLINK method deletes links created by the LINK method.

OPTION The OPTION method is used by the client to ask the server about available options.

Response Message

A response message consists of a status line, a header, and sometimes a body. See Figure 27.5.

Status Line

The **status line** defines the status of the response message. It consists of the HTTP version, a space, a status code, a space, and a status phrase. See Figure 27.6.

- **HTTP version.** This field is the same as the corresponding field in the request line.
- **Status code.** The status code field is similar to those in the FTP and the SMTP protocols. It consists of three digits.
- **Status phrase.** This field explains the status code in text form.

Copyrighted material

version (1.1). The header has two lines that show that the client can accept images in GIF and JPEG format. The request does not have a body. The response message contains the status line and four lines of header. The header lines define the date, server, MIME version, and length of the document. The body of the document follows the header (see Fig. 27.9).

Figure 27.9 *Example 1*

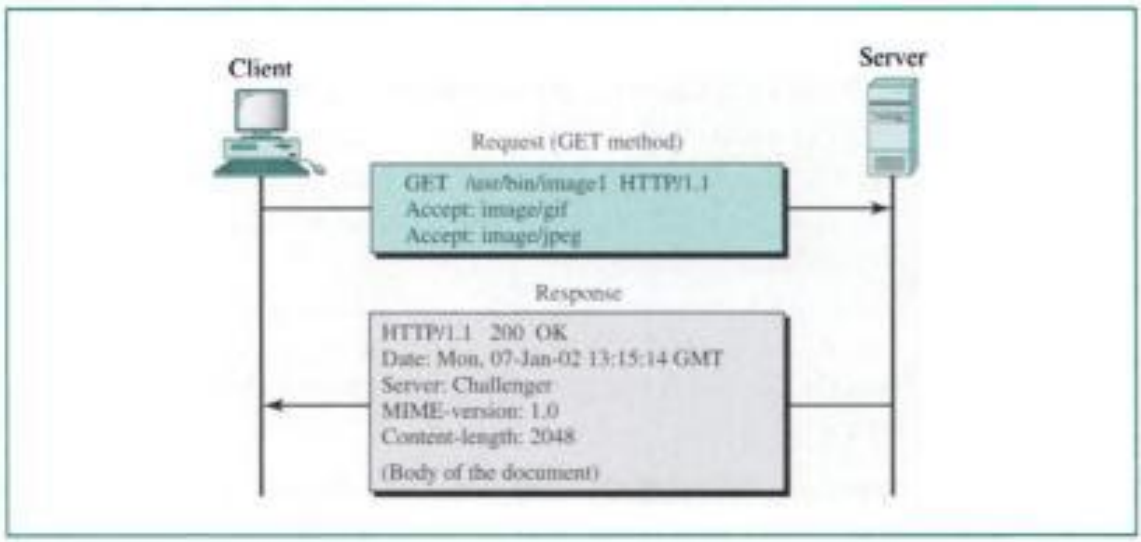

Example 2

This example retrieves information about a document. We use the HEAD method to retrieve information about an HTML document (see the next section). The request line shows the method (HEAD), URL, and HTTP version (1.1). The header is one line showing that the client can accept the document in any format (wild card). The request does not have a body. The response message contains the status line and five lines of header. The header lines define the date, server, MIME version, type of document, and length of the document (see Fig. 27.10). Note that the response message does not contain a body.

Figure 27.10 *Example 2*

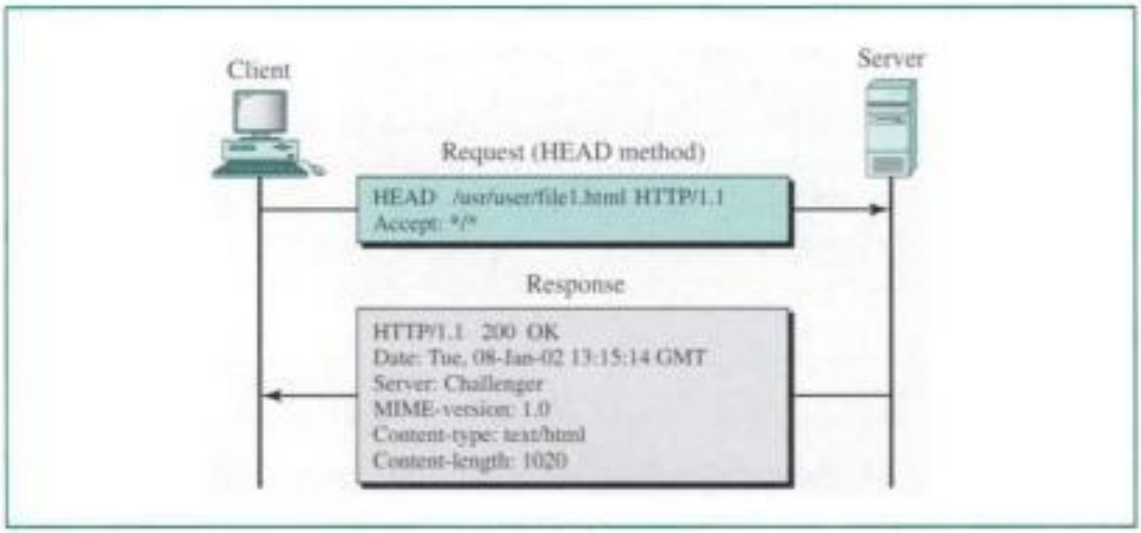

Copyrighted material

Figure 27.17 *Effect of boldface tags*

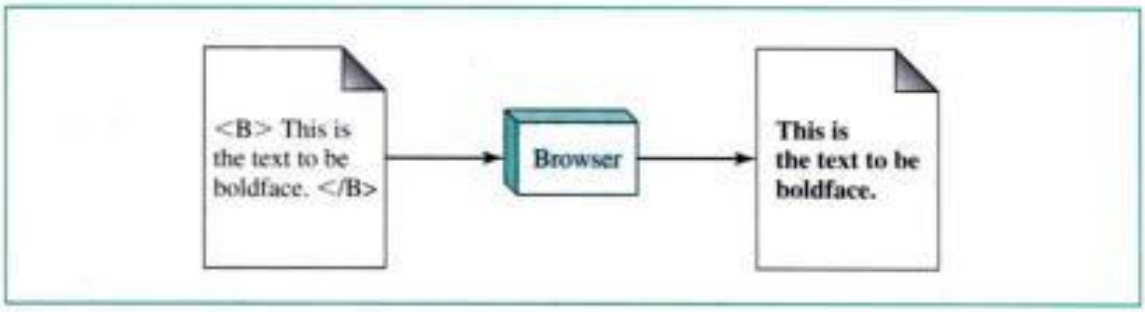

techniques or procedures for formatting text. For example, imagine that a user creates formatted text on a Macintosh computer and stores it in a Web page. Another user who is on an IBM computer is not able to receive the Web page because the two computers are using different formatting procedures.

HTML lets us use only ASCII characters for both the main text and formatting instructions. In this way, every computer can receive the whole document as an ASCII document. The main text is the data, and the formatting instructions can be used by the browser to format the data.

Structure of a Web Page

A Web page is made up of two parts: the head and body.

Head The head is the first part of a Web page. The head contains the title of the page and other parameters that the browser will use.

Body The actual contents of a page are in the body, which includes the text and the tags. Whereas the text is the actual information contained in a page, the tags define the appearance of the document.

Tags The browser makes a decision about the structure of the text based on the **tags,** which are marks that are embedded into the text. A tag is enclosed in two signs (< and >) and usually comes in pairs. The beginning tag starts with the name of the tag, and the ending tag starts with a slash followed by the name of the tag.

A tag can have a list of attributes, each of which can be followed by an equals sign and a value associated with the attribute. Figure 27.18 shows the format of a tag.

Figure 27.18 *Beginning and ending tags*

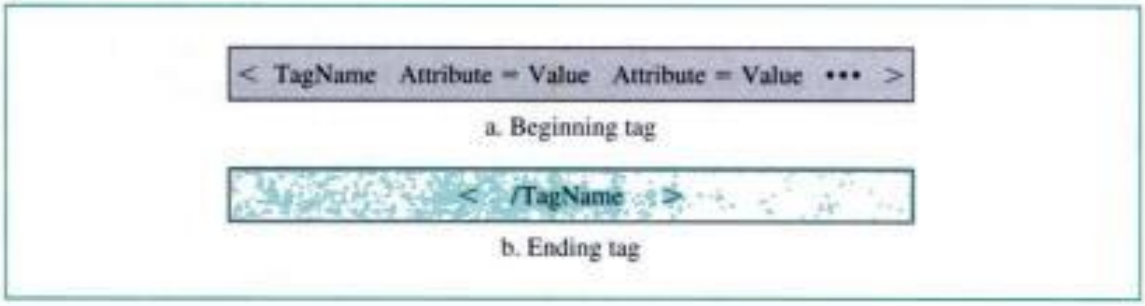

Copyrighted material

First HTML Program
<HTML>
<HEAD>
<TITLE> First Sample Document </TITLE>
</HEAD>
<BODY>
<CENTER>
<H1><B> ATTENTION </B></H1>
</CENTER>
You can get a copy of this document by:
<UL>
<LI> Writing to the publisher
<LI> Ordering online
<LI> Ordering through a bookstore
</UL>
</BODY>
</HTML>

Example 4

This example shows how tags are used to import an image and insert it into the text.

Second HTML Program
<HTML>
<HEAD>
<TITLE> Second Sample Document </TITLE>
</HEAD>
<BODY>
This is the picture of a book:
<IMG SRC="Pictures/book1.gif" ALIGN=MIDDLE>
</BODY>
</HTML>

Example 5

This example shows how tags are used to make a hyperlink to another document.

Copyrighted material

Second Example of Java

```
import java.applet.*;
import java.awt.*;

public class Second extends Applet
{
    public void paint (Graphics  g)
     {
      g.drawLine (0, 0, 80, 90);
     }
}
```

27.3 KEY TERMS

active document
applet
browser
Common Gateway Interface (CGI)
dynamic document
entity header
general header
homepage
hypermedia
hypertext
Hypertext Markup Language (HTML)
Hypertext Transfer Protocol (HTTP)
Java
nonpersistent connection
page
persistent connection
proxy server
request header
response header
static document
status code
status line
tag
Uniform Resource Locator (URL)
Web
World Wide Web (WWW)

27.4 SUMMARY

- The Hypertext Transfer Protocol (HTTP) is the main protocol used to access data on the World Wide Web (WWW).
- The World Wide Web is a repository of information spread all over the world and linked together.
- Hypertext and hypermedia are documents linked to one another through the concept of pointers.
- Browsers interpret and display a Web document.
- A browser consists of a controller, client programs, and interpreters.
- A Web document can be classified as static, dynamic, or active.
- A static document is one in which the contents are fixed and stored in a server. The client can make no changes in the server document.
- Hypertext Markup Language (HTML) is a language used to create static Web pages.
- Any browser can read formatting instructions (tags) embedded in an HTML document.
- A dynamic Web document is created by a server only at a browser request.

Copyrighted material

30. What are the components of a browser?
    a. Retrieval method, host computer, path name
    b. Controller, client program, interpreter
    c. Hypertext, hypermedia, HTML
    d. All the above
31. Which type of Web document is run at the client site?
    a. Static
    b. Dynamic
    c. Active
    d. All the above
32. Which type of Web document is created at the server site only when requested by a client?
    a. Static
    b. Dynamic
    c. Active
    d. All the above
33. Which type of Web document is fixed-content and is created and stored at the server site?
    a. Static
    b. Dynamic
    c. Active
    d. All the above
34. The _____ of a Web page contains the title and parameters used by the browser.
    a. Tags
    b. Head
    c. Body
    d. Attributes
35. In <IMG SRC="Pictures/book1.gif" ALIGN=middle> ALIGN is _____.
    a. A tag
    b. The head
    c. The body
    d. An attribute
36. An ending tag is usually of the form _____.
    a. </tagname>
    b. <\tagname>
    c. <tagname>
    d. <tagname!>
37. Which category of HTML tags allows the listing of documents?
    a. Image
    b. List

Copyrighted material

45. _____ is used to enable the use of active documents.
    a. HTML
    b. CGI
    c. Java
    d. All the above
46. Java is _____.
    a. A programming language
    b. A run-time environment
    c. A class library
    d. All the above
47. An applet is _____ document application program.
    a. A static
    b. An active
    c. A passive
    d. A dynamic
48. Stock quotations are posted on the Web. This is probably a(n) _____ document.
    a. Active
    b. Static
    c. Passive
    d. Dynamic
49. Updates for a satellite's coordinates can be obtained on the WWW. This is probably a(n) _____ document.
    a. Active
    b. Static
    c. Passive
    d. Dynamic

Exercises

50. Compare HTTP and FTP. Which one is simpler? Explain your answer.
51. Compare the way SMTP and HTTP transfer images. Which one do you think is more efficient? Why?
52. What quality of service (QoS) is the most important in HTTP (minimum delay, maximum throughput, and reliability? Which one is less important? Explain your answer.
53. SMTP, FTP, and HTTP are protocols to transfer messages from one point to another. Compare and contrast their use.
54. Do you think HTTP can be used effectively for transferring stored audio and video? Explain your answer.
55. Do you think HTTP can be used effectively for transferring live audio and video? Explain your answer.

Copyrighted material

56. Do you think an HTTP client can monopolize an HTTP server?
57. Do you think HTTP uses iterative or concurrent client/server interaction?
58. Show the effect of the tags in the following line:

```
This is <BR> a line of <BR> HTML
```

59. Show the effect of the tags in the following line:

```
This is <BR><BR> another line of <BR><BR> HTML
```

60. Show the effect of the tags in the following lines:

```
<H1> DOCUMENT </H1>
<H2> This is an HTML document </H2>
<H1> It shows the effect of H-tags </H1>
```

61. Show the effect of the tags in the following lines:

```
<UL>
<LI> Last Name, First Name, Initial </LI>
<LI> Street Address, City </LI>
<LI> State, Zip Code </LI>
</UL>
```

62. Where will each figure be shown on the screen?

```
 Look at the following picture:
 then tell me what you feel:
<IMG SRC="Pictures/Funny1.gif" ALIGN=middle>
<IMG SRC="Pictures/Funny2.gif" ALIGN=bottom>
<B> What is your feeling? </B>
```

63. Show the effect of the following HTML segment.

```
The publisher of this book is <A HREF="www.mhhe">
McGraw-Hill Publisher </A>
```

Copyrighted material

CHAPTER 28

Multimedia

Recent advances in technology have changed our use of audio and video. In the past, we listened to an audio broadcast through a radio and watched a video program broadcast through a TV. We used the telephone network to interactively communicate with another party. But times have changed. People want to use the Internet, not only for text and image communications, but also for audio and video services. In this last chapter about the application layer, we concentrate on applications that use the Internet for audio and video services.

We can divide audio and video services into three broad categories: **streaming stored audio/video, streaming live audio/video,** and **interactive audio/video,** as shown in Figure 28.1. Streaming means a user can listen (or watch) the file after the downloading has started.

Figure 28.1 *Internet audio/video*

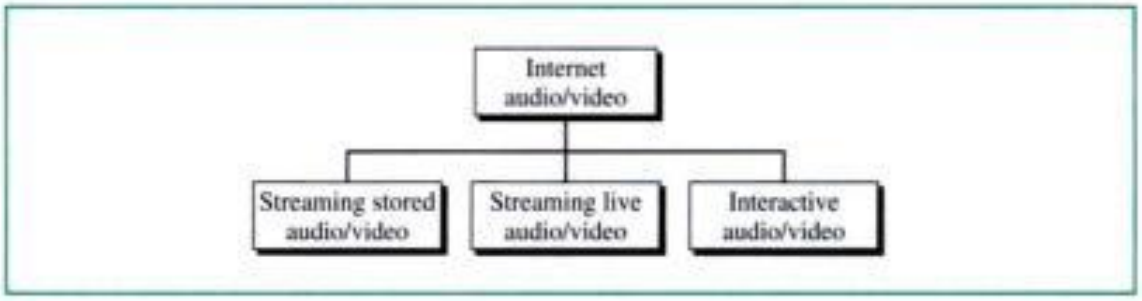

In the first category, streaming stored audio/video, the files are compressed and stored on a server. A client downloads the files through the Internet. This is sometimes referred to as **on-demand audio/video.** Examples of stored audio files are songs, symphonies, books on tape, and famous lectures. Examples of stored video files are movies, TV shows, and music video clips.

Streaming stored audio/video refers to on-demand requests for compressed audio/video files.

In the second category, streaming live audio/video, a user listens to broadcast audio and video through the Internet. A good example of this type of application is the

Copyrighted material

Internet radio. Some radio stations broadcast their programs only on the Internet; many broadcast them both on the Internet and on air. Internet TV is not popular yet, but many people believe that TV stations will broadcast their programs on the Internet in the future.

Streaming live audio/video refers to the broadcasting of radio and TV programs through the Internet.

In the third category, interactive audio/video, people use the Internet to interactively communicate with one another. A good example of this application is Internet telephony and Internet teleconferencing.

Interactive audio/video refers to the use of the Internet for interactive audio/video applications.

We will discuss these three applications in this chapter, but first we need to discuss some other issues related to audio/video: digitizing audio and video and compressing audio and video.

28.1 DIGITIZING AUDIO AND VIDEO

Before audio or video signals can be sent on the Internet, they need to be digitized. We discuss audio and video separately.

Digitizing Audio

When sound is fed into a microphone, an electronic analog signal is generated which represents the sound amplitude as a function of time. The signal is called an *analog audio signal*. We saw in Chapter 5 that an analog signal, such as audio, can be digitized to produce a digital signal. We learned that according to the Nyquist theorem, if the highest frequency of the signal is f, we need to sample the signal $2f$ times per second. There are other methods for digitizing an audio signal, but the principle is the same. We limit our discussion to what was discussed in Chapter 5.

Voice is sampled at 8000 samples per second with 8 bits per sample. This results in a digital signal of 64 Kbps. Music is sampled at 44,100 samples per second with 16 bits per sample. This results in a digital signal of 705.6 Kbps for monaural and 1.411 Mbps for stereo.

Digitizing Video

A video consists of a sequence of frames. If the frames are displayed on the screen fast enough, we get an impression of motion. The reason is that our eyes cannot distinguish the rapidly flashing frames as individual ones. There is no standard number of frames per second; in North America 25 frames per second is common. However, to avoid a

Copyrighted material

condition known as flickering, a frame needs to be refreshed. The TV industry repaints each frame twice. This means 50 frames need to be sent, or if there is memory at the sender site, 25 frames with each frame repainted from the memory.

Each frame is divided into small grids, called picture elements or **pixels.** For black-and-white TV, each 8-bit pixel represents one of 256 different gray levels. For a color TV, each pixel is 24 bits, with 8 bits for each primary color (red, green, and blue).

We can calculate the number of bits in a second for a specific resolution. In the lowest resolution a color frame is made of 1024×768 pixels. This means that we need

$$2 \times 25 \times 1024 \times 768 \times 24 = 944 \text{ Mbps}$$

This data rate needs a very high-data-rate technology such as SONET. To send video using lower-rate technologies, we need to compress the video.

***Compression* is needed to send video over the Internet.**

28.2 AUDIO AND VIDEO COMPRESSION

To send audio or video over the Internet requires **compression.** In this section, we discuss first audio compression and then video compression.

Audio Compression

Audio compression can be used for speech or music. For speech, we need to compress a 64-KHz digitized signal; for music, we need to compress a 1.411-MHz signal. Two categories of techniques are used for audio compression: predictive encoding and perceptual encoding.

Predictive Encoding

In **predictive encoding,** the differences between the samples are encoded instead of encoding all the sampled values. This type of compression is normally used for speech. Several standards have been defined such as GSM (13 Kbps), G.729 (8 Kbps), G.723.3 (6.4 or 5.3 Kbps). Detailed discussions of these techniques are beyond the scope of this book.

Perceptual Encoding: MP3

The most common compression technique that is used to create CD-quality audio is based on the **perceptual encoding** technique. As we mentioned before, this type of audio needs at least 1.411 Mbps; this cannot be sent over the Internet without compression. **MP3** (MPEG audio layer 3), a part of the MPEG standard (discussed in the video compression section), uses this technique.

Perceptual encoding uses the science of psychoacoustics, which is the study of how people perceive sound. The idea is based on some flaws in our auditory system: Some sounds can mask other sounds. Masking can happen in frequency and time. In

Copyrighted material

removed by using one of the text compression methods. A simplified version of the process is shown in Figure 28.3.

Figure 28.3 *JPEG process*

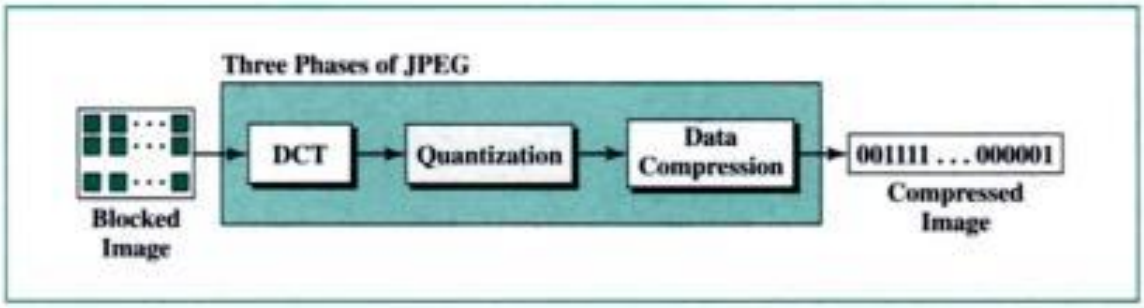

Discrete Cosine Transform (DCT) In this step, each block of 64 pixels goes through a transformation called the **discrete cosine transform (DCT).** The transformation changes the 64 values so that the relative relationships between pixels are kept but the redundancies are revealed. We do not give the formula here, but we do show the results of the transformation for three cases.

Case 1 In this case, we have a block of uniform gray, and the value of each pixel is 20. When we do the transformations, we get a nonzero value for the first element (upper left corner); the rest of the pixels have a value of 0. The value of $T(0,0)$ is the average (multiplied by a constant) of the other values and is called the *dc value* (direct current, borrowed from electrical engineering). The rest of the values, called *ac values*, in $T(m,n)$ represent changes in the pixel values. But because there are no changes, the rest of the values are 0s (see Fig. 28.4).

Figure 28.4 *Case 1: uniform gray scale*

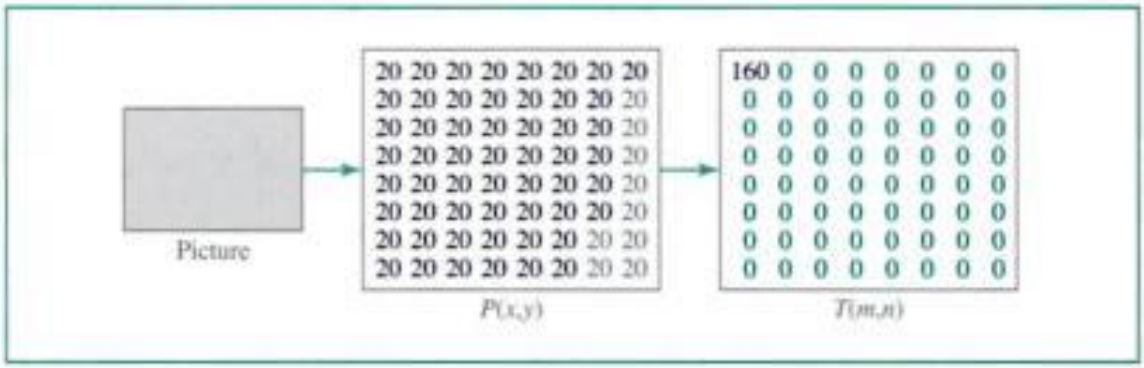

Case 2 In the second case, we have a block with two different uniform gray scale sections. There is a sharp change in the values of the pixels (from 20 to 50). When we do the transformations, we get a dc value as well as nonzero ac values. However, there are only a few nonzero values clustered around the dc value. Most of the values are 0 (see Fig. 28.5).

Copyrighted material

Figure 28.5 *Case 2: two sections*

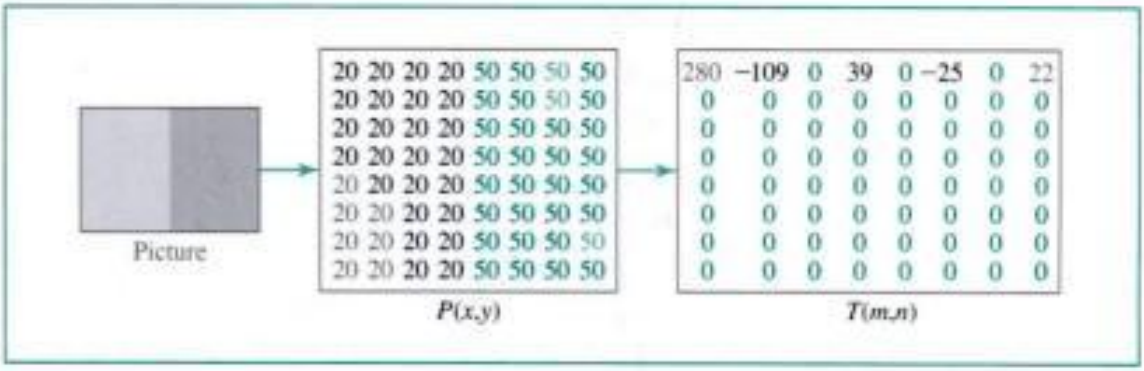

Case 3 In the third case, we have a block that changes gradually. That is, there is no sharp change between the values of neighboring pixels. When we do the transformations, we get a dc value, with many nonzero ac values also (Fig. 28.6).

Figure 28.6 *Case 3: gradient gray scale*

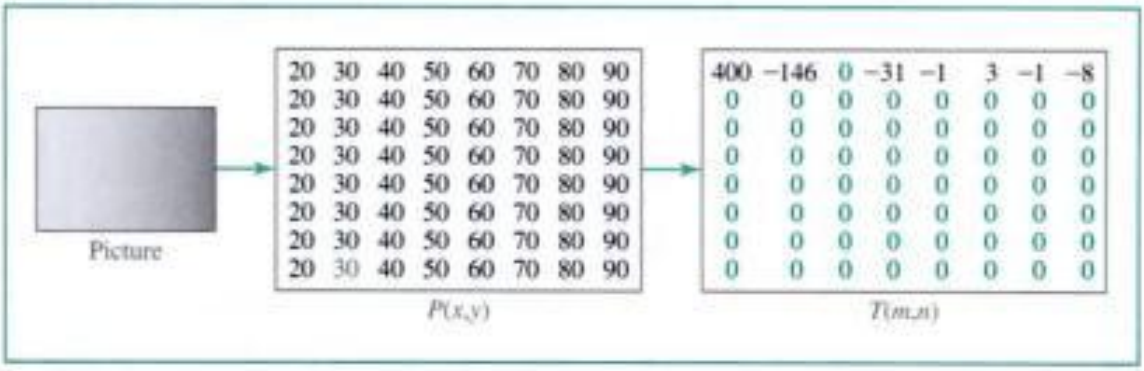

From Figures 28.4, 28.5, and 28.6, we can state the following: .

- The transformation creates table *T* from table *P*.
- The dc value is the average value (multiplied by a constant) of the pixels.
- The ac values are the changes.
- Lack of changes in neighboring pixels creates 0s.

Quantization After the *T* table is created, the values are quantized to reduce the number of bits needed for encoding. Previously in **quantization,** we dropped the fraction from each value and kept the integer part. Here, we divide the number by a constant and then drop the fraction. This reduces the required number of bits even more. In most implementations, a quantizing table (8 by 8) defines how to quantize each value. The divisor depends on the position of the value in the *T* table. This is done to optimize the number of bits and the number of 0s for each particular application. Note that the only phase in the process that is not reversible is the quantizing phase. We lose some information here that is not recoverable. As a matter of fact, the only reason that JPEG is called *lossy compression* is because of this quantization phase.

Copyrighted material

Compression After quantization, the values are read from the table, and redundant 0s are removed. However, to cluster the 0s together, the table is read diagonally in a zigzag fashion rather than row by row or column by column. The reason is that if the picture does not have fine changes, the bottom right corner of the *T* table is all 0s. Figure 28.7 shows the process.

Figure 28.7 *Reading the table*

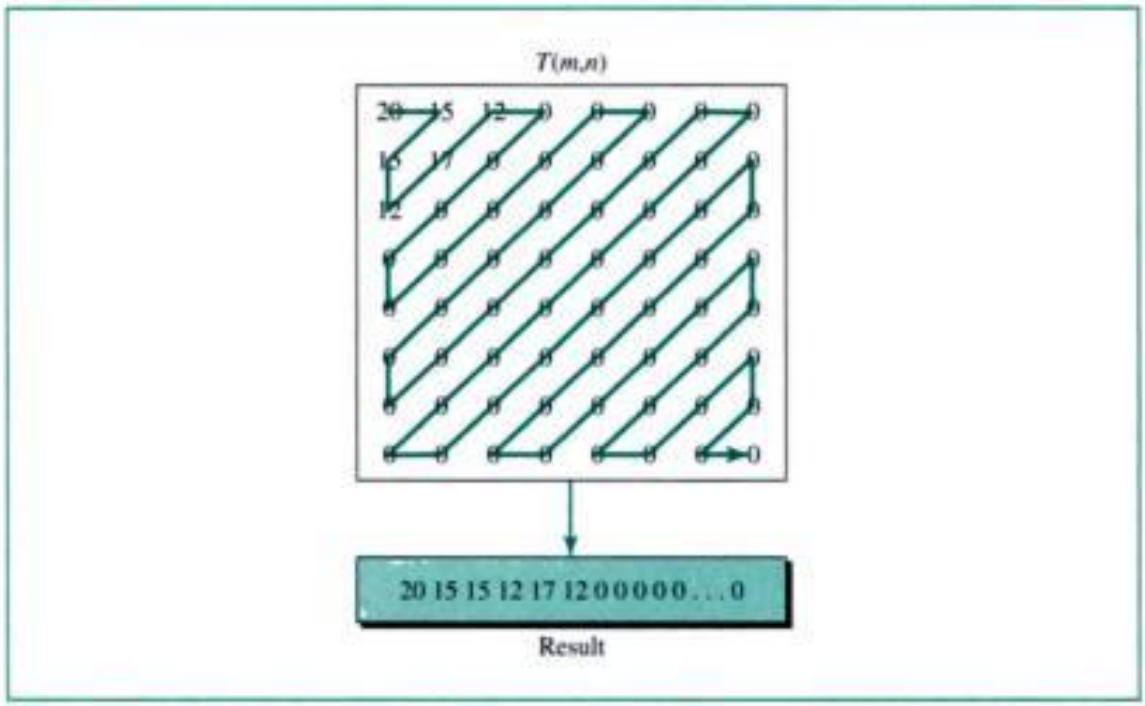

Video Compression: MPEG

The **Moving Picture Experts Group (MPEG)** method is used to compress video. In principle, a motion picture is a rapid flow of a set of frames, where each frame is an image. In other words, a frame is a spatial combination of pixels, and a video is a temporal combination of frames that are sent one after another. Compressing video, then, means spatially compressing each frame and temporally compressing a set of frames.

Spatial Compression The **spatial compression** of each frame is done with JPEG (or a modification of it). Each frame is a picture that can be independently compressed.

Temporal Compression In **temporal compression,** redundant frames are removed. When we watch television, we receive 50 frames per second. However, most of the consecutive frames are almost the same. For example, when someone is talking, most of the frame is the same as the previous one except for the segment of the frame around the lips, which changes from one frame to another.

To temporally compress data, the MPEG method first divides frames into three categories: I-frames, P-frames, and B-frames.

Copyrighted material

A sequence number on each packet is required for real-time traffic.

Multicasting

Multimedia play a primary role in audio and video conferencing. The traffic can be heavy, and the data are distributed using **multicasting** methods. Conferencing requires two-way communication between receivers and senders.

Real-time traffic needs the support of multicasting.

Translation

Sometimes real-time traffic needs **translation.** A translator is a computer that can change the format of a high-bandwidth video signal to a lower-quality narrow-bandwidth signal. This is needed, for example, for a source creating a high-quality video signal at 5 Mbps and sending to a recipient having a bandwidth of less than 1 Mbps. To receive the signal, a translator is needed to decode the signal and encode it again at a lower quality that needs less bandwidth.

Translation means changing the encoding of a payload to a lower quality to match the bandwidth of the receiving network.

Mixing

If there is more than one source that can send data at the same time (as in a video or audio conference), the traffic is made of multiple streams. To reduce the traffic to one stream, data from different sources can be mixed into one stream. A **mixer** mathematically adds signals coming from different sources to create one single signal.

Mixing means combining several streams of traffic into one stream.

Support from Transport Layer Protocol

The procedures mentioned in the previous sections can be implemented in the application layer. However, they are so common in real-time applications that implementation in the transport layer protocol is preferable. Let's see which of the existing transport layers is suitable for this type of traffic.

TCP is not suitable for interactive traffic. It has no provision for timestamping, and it does not support multicasting. However, it does provide ordering (sequence numbers). One feature of TCP that makes it particularly unsuitable for interactive traffic is its error control mechanism. In interactive traffic, we cannot allow the retransmission of a lost or corrupted packet. If a packet is lost or corrupted in interactive traffic, it must just be ignored. Retransmission upsets the whole idea of timestamping and playback. Today there is so much redundancy in audio and video signals (even with compression) that we can simply ignore a lost packet. The listener or viewer at the remote site may not even notice it.

Copyrighted material

TCP, with all its sophistication, is not suitable for interactive multimedia traffic because we cannot allow retransmission of packets.

UDP is more suitable for interactive multimedia traffic. UDP supports multicasting and has no retransmission strategy. However, UDP has no provision for timestamping, sequencing, or mixing.

To use UDP and at the same time provide support for the missing features, we use UDP in conjunction with a new transport protocol, Real-Time Transport Protocol (RTP), for real-time traffic on the Internet.

UDP is more suitable than TCP for interactive traffic. However, we need the services of RTP, another transport layer protocol, to make up for the deficiencies of UDP.

Real-Time Transport Protocol

Real-Time Transport Protocol (RTP) is the protocol designed to handle real-time traffic on the Internet. RTP does not have a delivery mechanism (multicasting, port numbers, and so on); it must be used with UDP. RTP stands between UDP and the application program. The main contributions of RTP are timestamping, sequencing, and mixing facilities. Figure 28.18 shows the position of RTP in the protocol suite.

Figure 28.18 *RTP*

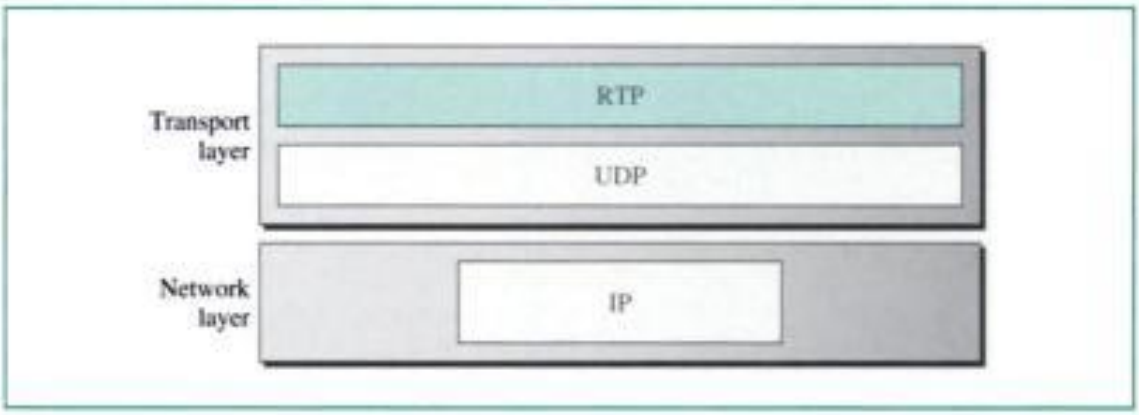

UDP Port

Although RTP is itself a transport layer protocol, the RTP packet is not encapsulated directly in an IP datagram. Instead, RTP is treated as an application program and is encapsulated in a UDP user datagram. However, unlike other application programs, no well-known port is assigned to RTP. The port can be selected on demand with only one restriction: The port number must be an even number. The next number (an odd number) is used by the companion of RTP, Real-Time Transport Control Protocol.

RTP uses a temporary even-numbered UDP port.

Copyrighted material

Real-Time Transport Control Protocol (RTCP)

RTP allows only one type of message, one that carries data from the source to the destination. In many cases, there is a need for other messages in a session. These messages control the flow and quality of data and allow the recipient to send feedback to the source or sources. **Real-Time Transport Control Protocol (RTCP)** is a protocol designed for this purpose. RTCP has five types of messages as shown in Figure 28.19.

Figure 28.19 *RTCP message types*

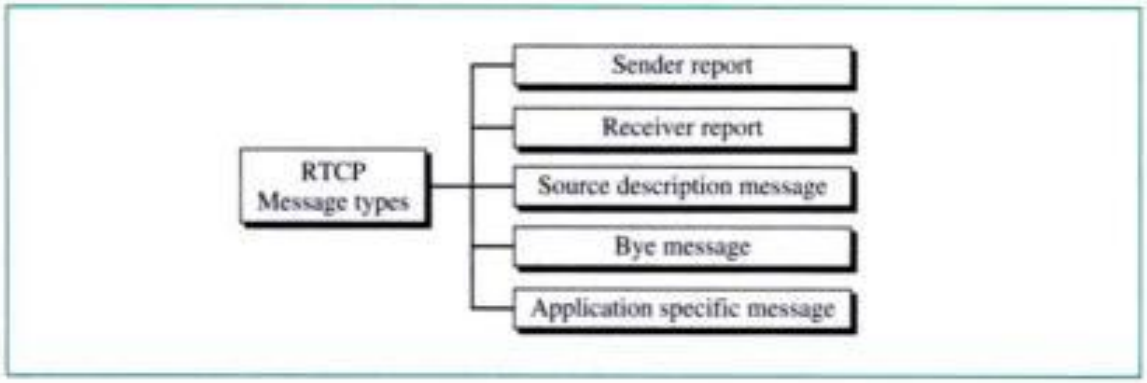

Sender Report

The sender report is sent periodically by the active senders in a conference to report transmission and reception statistics for all RTP packets sent during the interval. The sender report includes an absolute timestamp, which is the number of seconds elapsed since midnight January 1, 1970. The absolute timestamp allows the receiver to synchronize different RTP messages. It is particularly important when both audio and video are transmitted (audio and video transmissions use separate relative timestamps).

Receiver Report

The receiver report is for passive participants, those that do not send RTP packets. The report informs the sender and other receivers about the quality of service.

Source Description Message

The source periodically sends a source description message to give additional information about itself. This information can be the name, email address, telephone number, and address of the owner or controller of the source.

Bye Message

A source sends a bye message to shut down a stream. It allows the source to announce that it is leaving the conference. Although other sources can detect the absence of a source, this message is a direct announcement. It is also very useful to a mixer.

Copyrighted material

Application-Specific Message

The application-specific message is a packet for an application that wants to use new applications (not defined in the standard). It allows the definition of a new message type.

UDP Port

RTCP, like RTP, does not use a well-known UDP port. It uses a temporary port. The UDP port chosen must be the number immediately following the UDP port selected for RTP. It must be an odd-numbered port.

RTCP uses an odd-numbered UDP port number that follows the port number selected for RTP.

28.6 VOICE OVER IP

Let us concentrate on one real-time interactive audio/video application: **voice over IP,** or Internet telephony. The idea is to use the Internet as a telephone network with some additional capabilities. Instead of communicating over a circuit-switched network, this application allows communication between two parties over the packet-switched Internet. Two protocols have been designed to handle this type of communication: SIP and H.323. We briefly discuss both.

SIP

The **Session Initiation Protocol (SIP)** was designed by IETF. It is an application layer protocol that establishes, manages, and terminates a multimedia session (call). It can be used to create two-party, multiparty, or multicast sessions. SIP is designed to be independent of the underlying transport layer; it can run on either UDP or TCP.

Messages

SIP is a text-based protocol like HTTP. SIP, like HTTP, uses messages. Six messages are defined as shown in Figure 28.20.

Figure 28.20 *SIP messages*

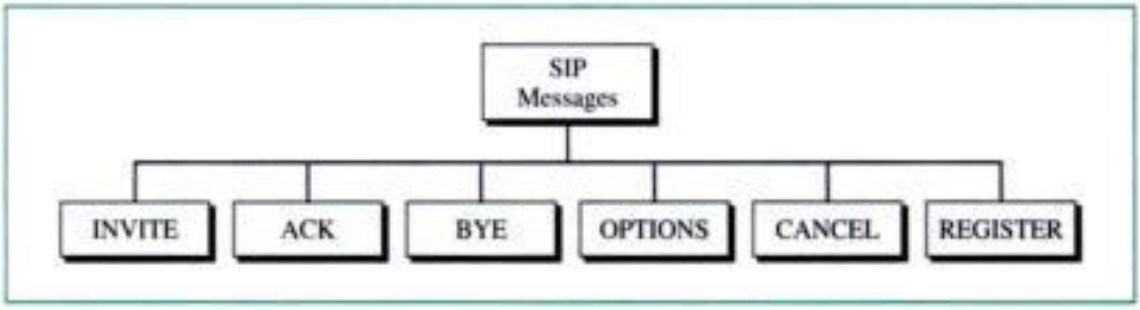

Copyrighted material

Each message has a header and a body. The header consists of several lines that describe the structure of the message, caller's capability, media type, and so on. We give a brief description of each message. Then we show their applications in the sample sessions.

The caller initializes a session with the INVITE message. After the callee answers the call, the caller sends an ACK message for confirmation. The BYE message terminates a session. The OPTIONS message queries a machine about its capabilities. The CANCEL message cancels an already started initialization process. The REGISTER message makes a connection when the callee is not available.

Addresses

In a regular telephone communication a telephone number identifies the sender, and another telephone number identifies the receiver. SIP is very flexible. In SIP, an email address, an IP address, a telephone number, and other types of addresses can be used to identify the sender and receiver. However, the address needs to be in SIP format (also called scheme). Figure 28.21 shows some common formats.

Figure 28.21 *SIP formats*

Simple Session

A simple session using SIP consists of three modules: establishing, communicating, and terminating. Figure 28.22 shows a simple session using SIP.

Establishing a Session Establishing a session in SIP requires a three-way handshake. The caller sends an INVITE message, using UDP or TCP, to begin the communication. If the callee is willing to start the session, she sends a reply message. To confirm that a reply code has been received, the caller sends an ACK message.

Communicating After the session has been established, the caller and the callee can communicate using two temporary ports.

Terminating the Session The session can be terminated with a BYE message sent by either party.

Tracking the Callee

What happens if the callee is not sitting at her terminal? She may be away from her system or at another terminal. She may not even have a fixed IP address if DHCP is being used. SIP has a mechanism (similar to one in DNS) that finds the IP address of

Copyrighted material

Figure 28.23 *Tracking the callee*

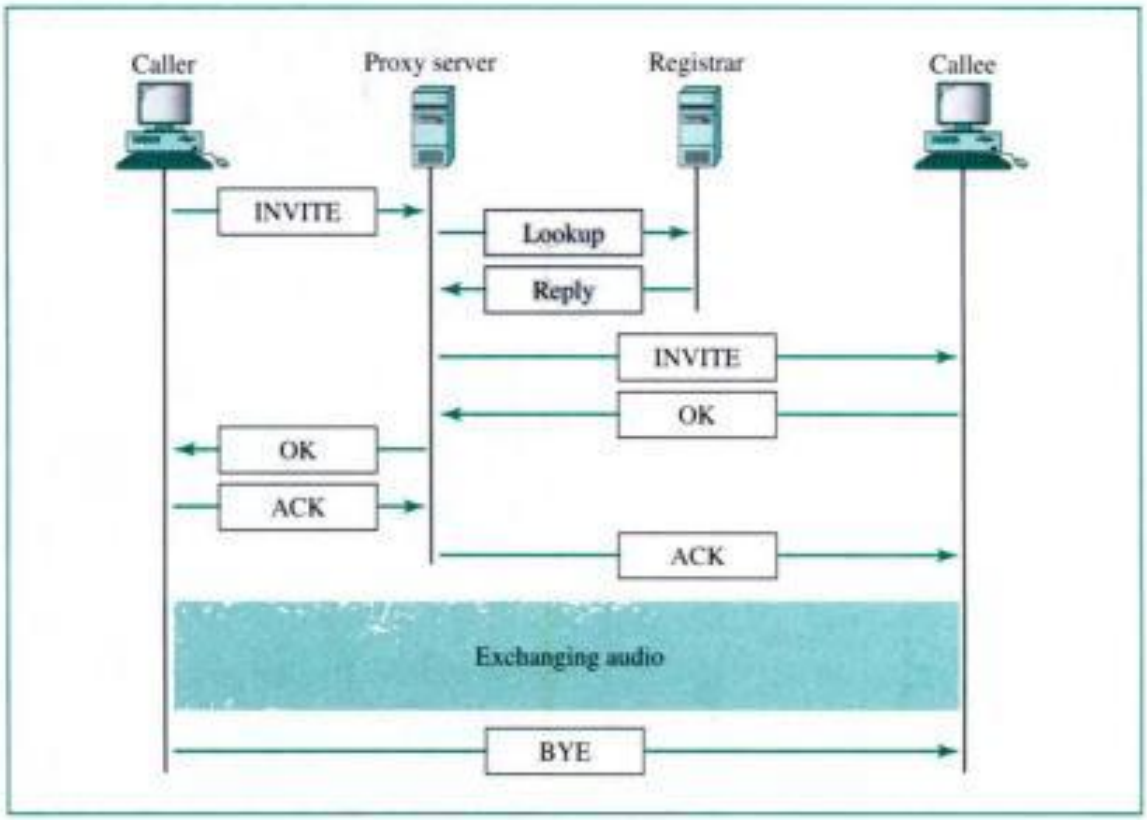

Figure 28.24 *H.323 architecture*

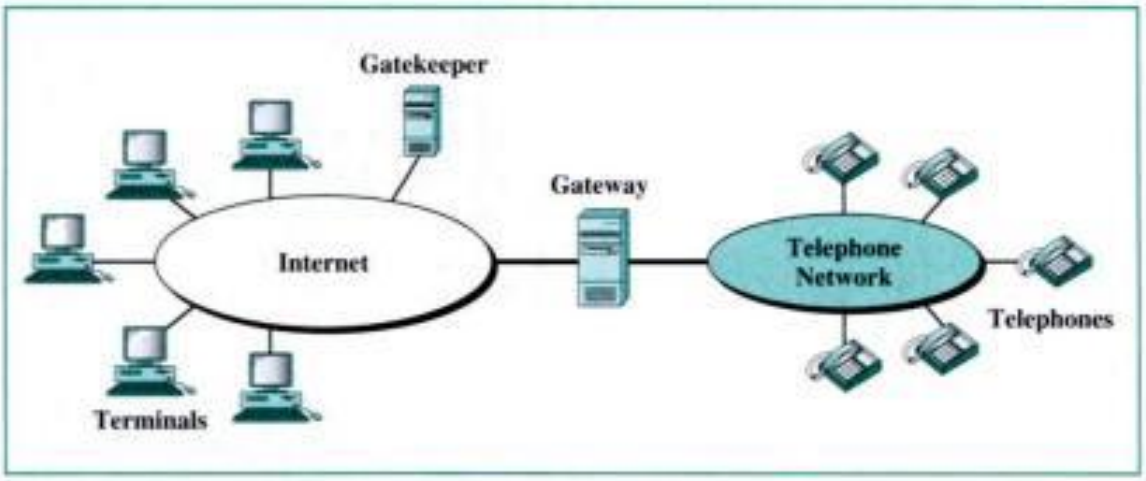

Protocols

H.323 uses a number of protocols to establish and maintain voice (or video) communication. Figure 28.25 shows these protocols.

H.323 uses G.71 or G.723.1 for compression. It uses a protocol named H.245 which allows the parties to negotiate the compression method. Protocol Q.931 is used for establishing and terminating connections. Another protocol called H.225, or RAS (Registration/Administration/Status), is used for registration with the gatekeeper.

Copyrighted material

Figure 28.25 *H.323 protocols*

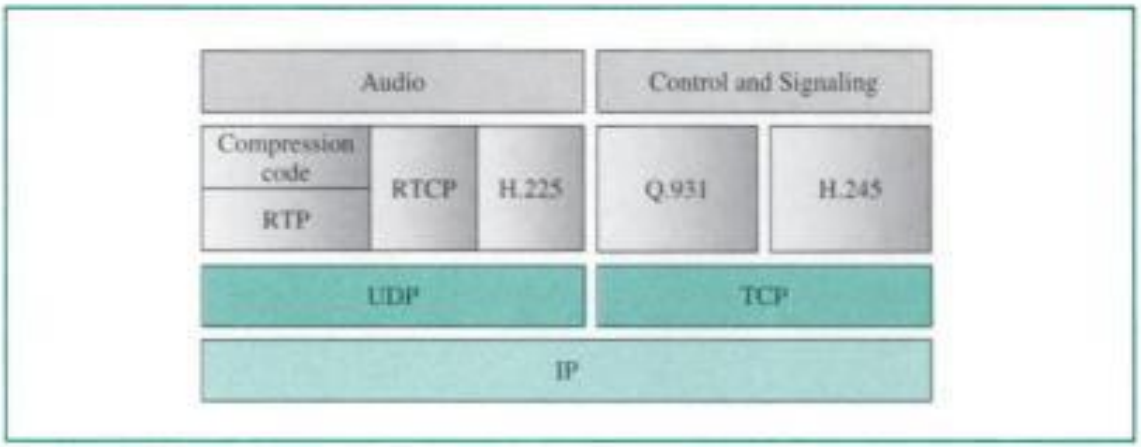

Operation

Let us show the operation of a telephone communication using H.323 with a simple example. Figure 28.26 shows the steps used by a terminal to communicate with a telephone.

1. The terminal sends a broadcast message to the gatekeeper. The gatekeeper responds with its IP address.
2. The terminal and gatekeeper communicate, using H.225 to negotiate bandwidth.

Figure 28.26 *H.323 example*

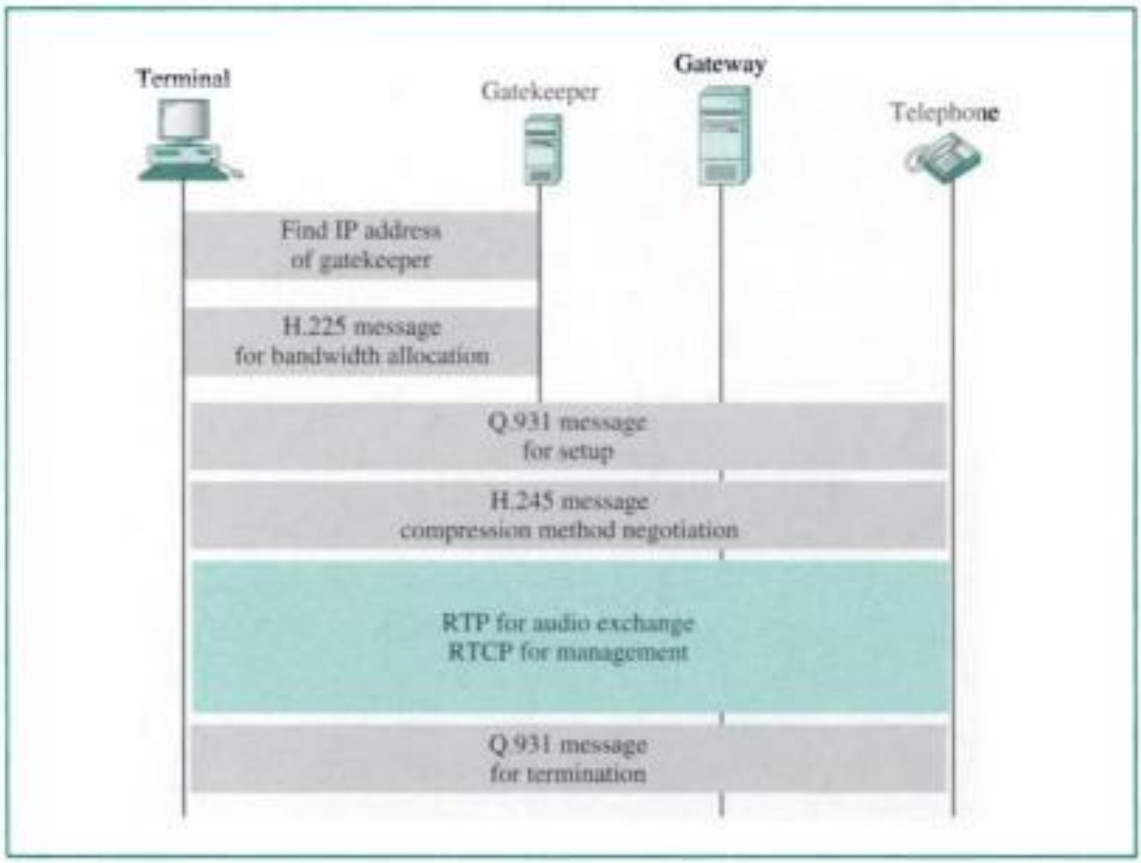

Copyrighted material

- Moving Pictures Experts Group (MPEG) is a method to compress video.
- MPEG involves both spatial compression and temporal compression. The former is similar to JPEG, and the latter removes redundant frames.
- We can use a Web server, or a Web server with a metafile, or a media server, or a media server and RSTP to download a streaming audio/video file.
- Real-time data on a packet-switched network require the preservation of the time relationship between packets of a session.
- Gaps between consecutive packets at the receiver cause a phenomenon called jitter.
- Jitter can be controlled through the use of timestamps and a judicious choice of the playback time.
- A playback buffer holds data until they can be played back.
- A receiver delays playing back real-time data held in the playback buffer until a threshold level is reached.
- Sequence numbers on real-time data packets provide a form of error control.
- Real-time data are multicast to receivers.
- Real-time traffic sometimes requires a translator to change a high-bandwidth signal to a lower-quality narrow-bandwidth signal.
- A mixer combines signals from different sources into one signal.
- Real-time multimedia traffic requires both UDP and Real-Time Transport Protocol (RTP).
- RTP handles timestamping, sequencing, and mixing.
- Real-Time Transport Control Protocol (RTCP) provides flow control, quality of data control, and feedback to the sources.
- Voice over IP is a real-time interactive audio/video application.
- The Session Initiation Protocol (SIP) is an application layer protocol that establishes, manages, and terminates multimedia sessions.
- H.323 is an ITU standard that allows a telephone connected to a public telephone network to talk to a computer connected to the Internet.

28.9 PRACTICE SET

Review Questions

1. How does streaming live audio/video differ from streaming stored audio/video?
2. What is predictive encoding?
3. What is MP3?
4. How does frequency masking differ from temporal masking?
5. What is the function of a metafile in streaming stored audio/video?
6. What is the purpose of RTSP in streaming stored audio/video?
7. How does jitter affect real-time audio/video?
8. Discuss how SIP is used in the transmission of multimedia.
9. When would you use JPEG? When would you use MPEG?

Copyrighted material

Exercises

37. In Figure 28.17 what is the amount of data in the playback buffer at each of the following times?
    a. 00:00:17
    b. 00:00:20
    c. 00:00:25
    d. 00:00:30
38. Compare and contrast TCP with RTP. Are both doing the same thing?
39. Can we say UDP plus RTP is the same as TCP?
40. Why does RTP need the service of another protocol, RTCP, but TCP does not?
41. In Figure 28.12, can the Web server and media server run on different machines?
42. We discuss the use of SIP in this chapter only for audio. Is there any drawback to prevent using it for video?
43. Do you think H.323 is actually the same as SIP? What are the differences? Make a comparison between the two.
44. What are the problems for full implementation of voice over IP? Do you think we will stop using the telephone network very soon?
45. Can H.323 also be used for video?

Copyrighted material

PART 7

Security

We have devoted the last part of the book to network security, a subject that is becoming more important every day. This subject is so vast and involved that we can only give an overview in this text. The number of books dealing with Internet security is growing as are the number of hackers. We discuss just the fundamental concepts here.

Topics

We have chosen several topics related to Internet security for this part of the book. These are shown in Figure 1.

Figure 1 *Security topics*

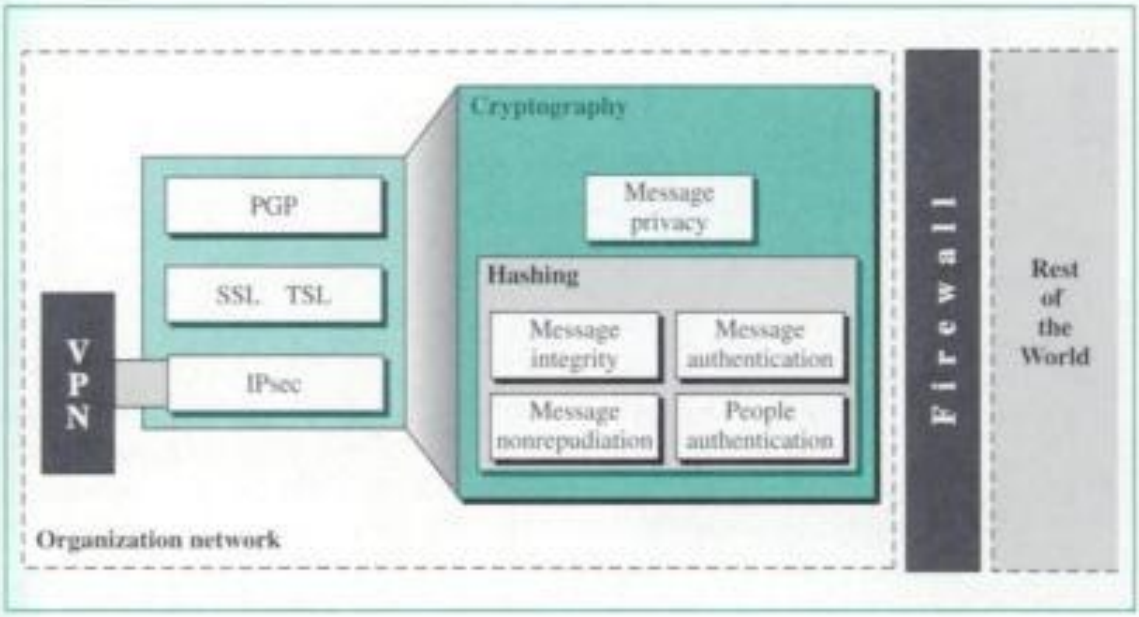

Cryptography

Cryptography is the heart of security. If we need to create privacy, we need to encrypt our message at the sender site and decrypt it at the receiver site. For thousands of years, people believed that cryptography required the use of a secret key between the two parties. Recently, a new method, public key cryptography has been devised that uses two keys: one public and one private. Using secret key cryptography is like using just one

Copyrighted material

key that both locks and unlocks a door. Using public key cryptography is like us separate keys; one can only lock, the other can only unlock. We have devoted Ch to the topic of cryptography.

Security Aspects

Today, security involves more than just privacy of the message. When Alice message to Bob, both are concerned about privacy, but they also need to worr other issues. Bob needs to be sure that the message from Alice really com Alice, and not somebody else; Bob needs to authenticate the message. Bob als to be sure that the message has not been changed during the transition; Bob r be sure of the integrity of the message. If Bob represents a bank and Alice rep a customer, Bob needs to be able to prove later that Alice has sent the me she later denies it; this is nonrepudiation. We introduce these aspects of sec Chapter 30.

Hashing

A topic that is related to the cryptography is hashing. Hashing means creating a ture version of a message that can be used instead of the message for some as security. For example, the miniature can be checked for integrity. If the minia not been changed during the transmission, it means that the message has n changed. We will discuss hashing in Chapter 30 when we discuss the digital sig

Authentication of People

In addition to authenticating messages, we sometimes need to authenticate pe processes to let them access the resources of an organization. There has been development in this area. We discuss some of the approaches and provide some in Chapter 30.

Key Management

Although it appears that cryptography can solve some security problems, it others in a network as large as the Internet. One such problem is key manag How can we exchange secret keys between two parties who are thousands c away? How can we be sure that Alice's public key is actually her key? We in key management in Chapter 30.

Security and Internet Model

There was little provision for security in the original design of the Internet mod OSI model, on the other hand, provided encryption/decryption services in the pr tion layer, a layer that does not exist in the Internet model. The OSI model wa implemented.

Now the question is, "If we want to implement security in the Internet m which layer it should be added?" The experts have not come out with a solid s especially since a security breach can happen in all five layers. At the physica an intruder can wiretap into the transmission media and read or alter a sequence

Copyrighted Material

CHAPTER 29

Cryptography

We begin our discussion of network security with an introduction to cryptography and a discussion of the methods used in security management. The science of cryptography is very complex; there are entire books devoted to the subject. A cryptography expert needs to be knowledgeable in areas such as mathematics, electronics, and programming. In this chapter, we consider the concepts needed to understand the security issues discussed in Chapter 30 and network security discussed in Chapter 31.

We focus on symmetric-key cryptography, which is presently more common than public-key cryptography. Symmetric-key cryptography is less math-based than public-key cryptography, which has its origins in number theory.

Cryptography and its applications to the Internet are a relatively new field whose importance increases with every new attack on the Internet.

29.1 INTRODUCTION

The word **cryptography** in Greek means "secret writing." However, the term today refers to the science and art of transforming messages to make them secure and immune to attacks. Figure 29.1 shows the components involved in cryptography.

Figure 29.1 *Cryptography components*

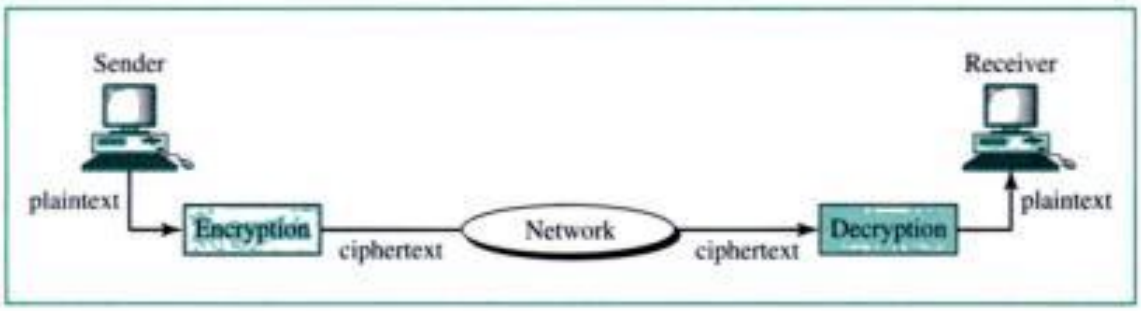

The original message, before being transformed, is called **plaintext.** After the message is transformed, it is called **ciphertext.** An **encryption** algorithm transforms the plaintext to ciphertext; a **decryption** algorithm transforms the ciphertext back to

Copyrighted material

another. For example, we can replace character A with D and character T with Z. If the symbols are digits (0 to 9), we can replace 3 with 7 and 2 with 6. We will concentrate on alphabetic characters. Substitution can be categorized as either **monoalphabetic** or **polyalphabetic.**

Monoalphabetic Substitution In monoalphabetic substitution, a character in the plaintext is always changed to the same character in the ciphertext regardless of its position in the text. For example, if the algorithm says that character A in the plaintext must be changed to character D, every character A is changed to character D, regardless of its position in the text. The first recorded ciphertext was used by Julius Caesar and is still called the *Caesar cipher*. The cipher shifts each character down by three. Figure 29.4 shows idea of the Caesar cipher.

Figure 29.4 *Caesar cipher*

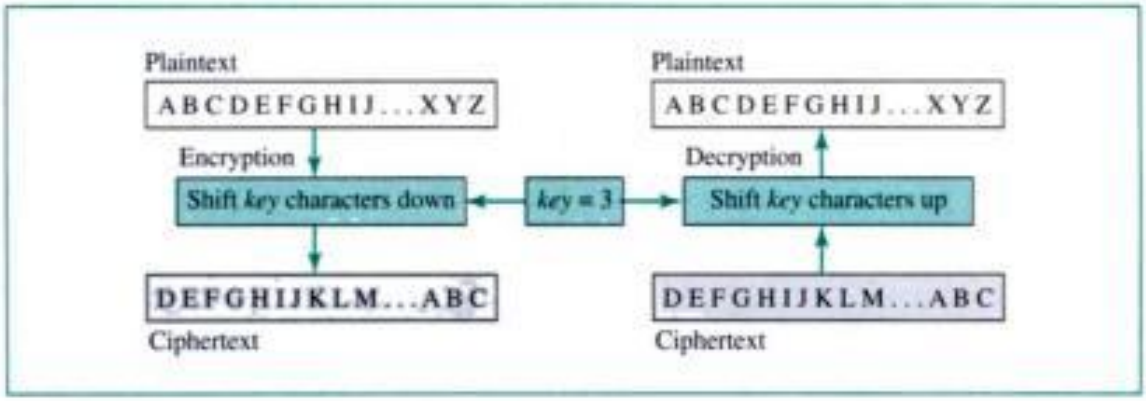

Before we go further, let us analyze the Caesar cipher which has an encryption algorithm, a decryption algorithm, and a symmetric key. As the figure shows, the encryption algorithm is "shift *key* characters down." The decryption algorithm is "shift *key* characters up." The key is 3. Note that the encryption and decryption algorithms are the inverses of each other; the key is the same in encryption and decryption.

We can think of monoalphabetic substitution in another way. We can assign numbers to the alphabet characters (A = 0, B = 1, C = 3, . . . , Z = 25). We can think of the encryption algorithm as simply "add the key to the plaintext number to get the ciphertext number." Decryption is the same, but we replace *add* with *subtract* and switch *plaintext* with *ciphertext*. Of course adding and subtracting are modulo 26, which means that 24 + 3 is 1, not 27; Y (24) is substituted with B (1).

In monoalphabetic substitution, the relationship between a character in the plaintext and a character in the ciphertext is always one-to-one. We can have many other encryption/decryption algorithms with other keys. We could change character A to J (shift of 9) and change character P to M (shift of –3). Figure 29.5 shows another example of monoalphabetic substitution. In this cipher, the two algorithms are still the inverse of each other. The key is the two rows as shown in the figure. Note that we still have a monoalphabetic substitution because the one-to-one relation is preserved.

Monoalphabetic substitution is very simple, but the code can be attacked easily. The reason is that the method cannot hide the natural frequencies of characters in the

Copyrighted material

of transpositional cryptography. The key defines which columns should be swapped. As you have guessed, transpositional cryptography is not very secure either. The character frequencies are preserved, and the attacker can find the plaintext through trial and error. This method can be combined with other methods to provide more sophisticated ciphers.

Block Cipher

Traditional ciphers used a character or symbol as the unit of encryption/decryption. Modern ciphers, on the other hand, use a block of bits as the unit of encryption/decryption. Figure 29.8 shows the concept of the **block cipher;** the plaintext and ciphertext are blocks of bits.

Figure 29.8 *Block cipher*

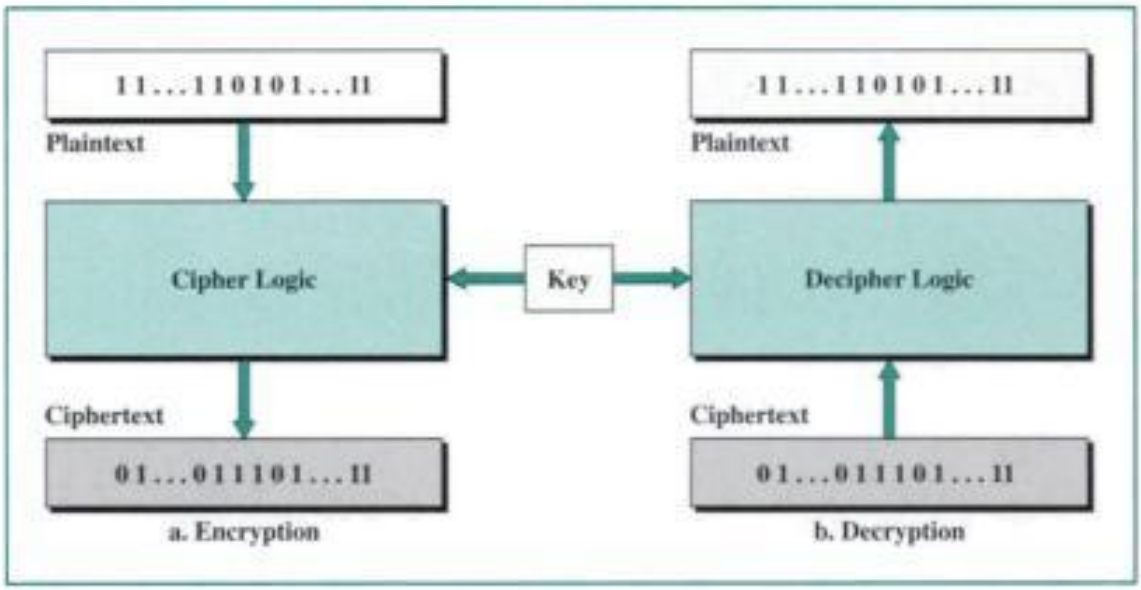

P-box

A **P-box** (P for permutation) performs a transposition at the bit level; it transposes bits as shown in Figure 29.9. It can be implemented in software or hardware, but hardware

Figure 29.9 *P-box*

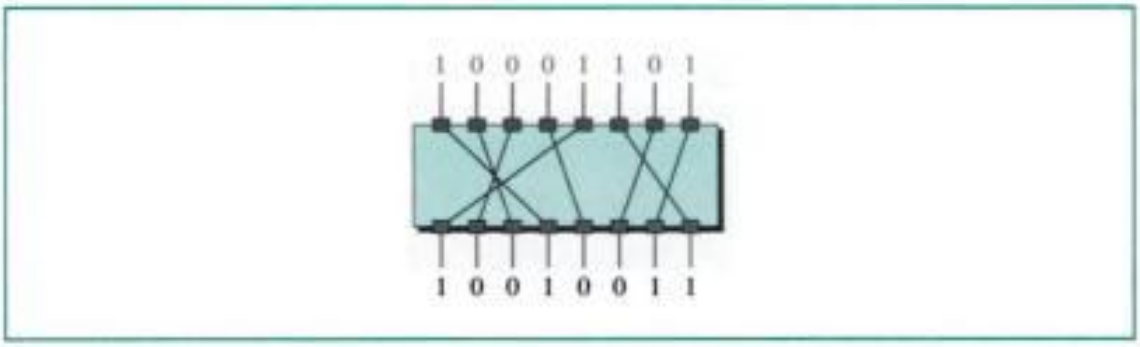

Copyrighted material

DES takes the data and chops them into 8-byte segments. However, the encryption and the key are the same for each segment. So if the data are four equal segments, the result is also four equal segments.

Triple DES

Critics of DES contend that the key is too short. To lengthen the key and at the same time keep the new block compatible with that of the original DES, **triple DES** was designed. This uses three DES blocks and two 56-bit keys, as shown in Figure 29.15. Note that the encrypting block uses an encryption-decryption-encryption combination of DESs, while the decryption block uses a decryption-encryption-decryption combination. It was designed this way to provide compatibility between triple DES and the original DES when K1 and K2 are the same.

Figure 29.15 *Triple DES*

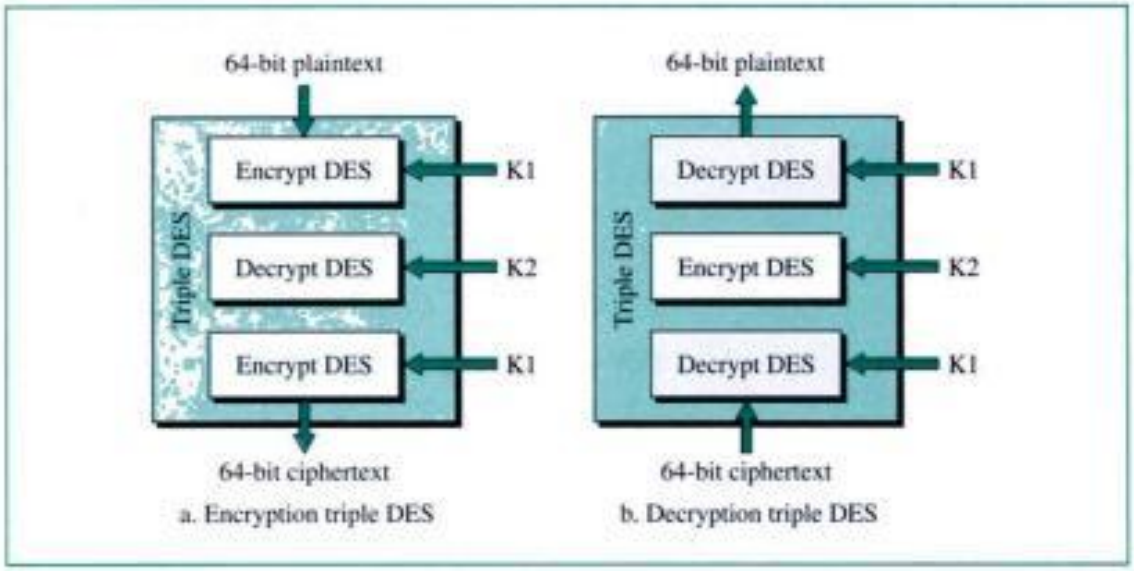

The DES cipher uses the same concept as the Caesar cipher, but the encryption/decryption algorithm is much more complex due to the sixteen 48-bit keys derived from a 56-bit key.

Operation Modes

DES and triple DES are actually long substitution ciphers that operate on eight-character segments (sometimes called long characters). Can we encrypt and decrypt longer messages (1000 characters, e.g.)? Several modes have been defined, and we briefly describe the four most common.

Electronic Code Block (ECB) Mode

In **electronic code block (ECB) mode,** we divide the long message into 64-bit blocks and encrypt each block separately, as shown in Figure 29.16. The encryption of each

Copyrighted material

the intruder use trial and error to find d? The answer is yes, in this trivial example an intruder could easily guess the value of d. But a major concept of the RSA algorithm is to use very large numbers for d and e. In practice, the numbers are so large (on the scale of tens of digits) that the trial-and-error approach of breaking the code takes a long time (years, if not months) even with the fastest computers available today.

Choosing Public and Private Keys

One question that comes to mind is, How do we choose the three numbers N, d, and e for encryption and decryption to work? The inventors of the RSA used number theory to prove that using the following procedure will guarantee that the algorithms will work. Although the proof is beyond the scope of this book, we outline the procedure:

1. Choose two large prime numbers p and q.
2. Compute $N = p \times q$.
3. Choose e (less than N) such that e and $(p - 1)(q - 1)$ are relatively prime (having no common factor other than 1).
4. Choose d such that $(e \times d) \bmod [(p - 1)(q - 1)]$ is equal to 1.

29.4 KEY TERMS

block cipher
cipher
cipher block chaining (CBC) mode
cipher feedback mode (CFM)
cipher stream mode (CSM)
ciphertext
cryptography
Data Encryption Standard (DES)
decryption
electronic code block (ECB) mode
encryption
key
monoalphabetic substitution
P-box
plaintext
polyalphabetic substitution
private key
product block
public key
public-key cryptography
Rivest, Shamir, Adleman (RSA) method
S-box
symmetric-key cryptography
transpositional cipher
triple DES
Vigenere cipher

29.5 SUMMARY

- Cryptography is the science and art of transforming messages to make them secure and immune to attack.
- Encryption renders a message (plaintext) unintelligible to unauthorized personnel.
- Decryption transforms an intentionally unintelligible message (ciphertext) into meaningful information.
- Cryptography algorithms are classified as either symmetric-key methods or public-key methods.

Copyrighted material

- In symmetric-key cryptography the same secret key is used by the sender and the receiver.
- Substitution ciphers are either monoalphabetic or polyalphabetic.
- The P-box, S-box, and product block are methods used by block ciphers.
- DES is a symmetric-key method adopted by the U.S. government, but it has been replaced by Triple DES or other methods.
- Operation modes to handle long messages include ECB mode, CBC mode, CFM, and CSM.
- In public-key cryptography, the public key is used by the sender to encrypt the message; the private key is used by the receiver to decrypt the message.
- One of the commonly used public-key cryptography methods is the RSA algorithm.

29.6 PRACTICE SET

Review Questions

1. What is the relationship between plaintext and ciphertext?
2. What are the two categories of cryptography methods? What is the main difference between the categories?
3. What is the concept behind substitutional cryptography?
4. Why is polyalphabetic substitution superior to monoalphabetic substitution?
5. What is the concept behind transpositional cryptography?
6. What is a block cipher?
7. What is the function of a P-box?
8. What is a product block?
9. How is triple DES different from the original DES?
10. Name four methods to encrypt and decrypt long messages.
11. What keys are needed for public-key cryptography?
12. What is a popular public-key encryption algorithm?

Multiple-Choice Questions

13. Before a message is encrypted, it is called _____.
    a. Plaintext
    b. Ciphertext
    c. Cryptotext
    d. Cryptonite
14. After a message is decrypted, it is called _____.
    a. Plaintext
    b. Ciphertext
    c. Cryptotext
    d. Cryptonite

Copyrighted material

32. Use the following encrypting algorithms to encrypt the message "GOOD DAY."
    a. Replace each character with its ASCII code.
    b. Add a 0 bit at the left to make each character 8 bits long.
    c. Swap the first 4 bits with the last 4 bits.
    d. Replace every 4 bits with its hexadecimal equivalent.

    What is the key in this method?
33. Use the following encrypting algorithm to encrypt the message "ABCADEFGH" (assume that the message is always made of uppercase letters).
    a. Treat each character as a decimal number, using ASCII code (between
    a. 65 and 90).
    b. Subtract 65 from each coded character.
    c. Change each number into a 5-bit pattern.
34. Using the RSA algorithm, encrypt and decrypt the message "BE" with key pairs (3, 15) and (5, 15).
35. Given the two prime numbers $p = 19$ and $q = 23$, try to find N, e, and d.
36. To understand the security of the RSA algorithm, find d if you know that $e = 17$ and $N = 187$.
37. In the RSA algorithm, we use $C = P^e \bmod N$ to encrypt a number. If e and N are large numbers (each hundreds of digits), the calculation is impossible and creates an overflow error even in a supercomputer. One solution (not the best one) using number theory involves several steps, where each step uses the result of the previous step:
    a. $C = 1$.
    b. Repeat e times:

    $$C = (C \times P) \bmod N$$

    In this way, a computer program can be written that calculates C using a loop. For example $6^5 \bmod 119$, which is 41, can be calculated as follows:

    $$\begin{aligned}(1 \times 6) \bmod 119 &= 6\\ (6 \times 6) \bmod 119 &= 36\\ (36 \times 6) \bmod 119 &= 97\\ (97 \times 6) \bmod 119 &= 106\\ (106 \times 6) \bmod 119 &= 41\end{aligned}$$

    Use this method to calculate $227^{16} \bmod 100$.

Copyrighted material

CHAPTER 30

Message Security, User Authentication, and Key Management

After studying cryptography in Chapter 29, we discuss some of its applications: message security, user authentication, and key management.

Message security involves confidentiality, integrity, authentication, and finally nonrepudiation.

User authentication means verifying the identity of the person or process that wants to communicate with a system. User authentication is also needed for key management.

Finally, we need key management: the distribution of symmetric keys and the certification of the public keys. Section 30.4 explains the methods used in key management.

30.1 MESSAGE SECURITY

Let us first discuss the security measures applied to each single message. We can say that security provides four services: privacy (confidentiality), message authentication, message integrity, and nonrepudiation (see Fig. 30.1).

Figure 30.1 *Message security*

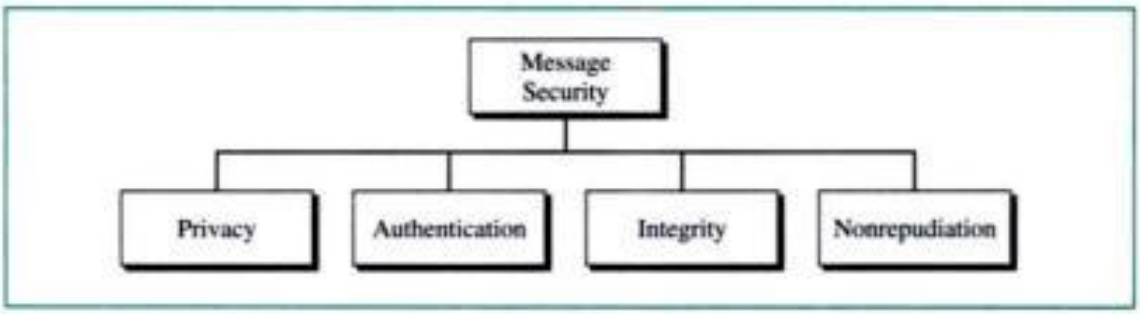

Copyrighted material

Privacy

Privacy means that the sender and the receiver expect confidentiality. The transmitted message must make sense to only the intended receiver. To all others, the message must be unintelligible.

The concept of how to achieve privacy has not changed for thousands of years: The message must be encrypted. That is, the message must be rendered unintelligible to unauthorized parties. A good privacy technique guarantees to some extent that a potential intruder (eavesdropper) cannot understand the contents of the message.

Privacy with Symmetric-Key Cryptography

Privacy can be achieved using symmetric-key encryption and decryption, as shown in Figure 30.2. As we discussed in Chapter 29, in symmetric-key cryptography the key is shared between Alice and Bob.

Figure 30.2 *Privacy using symmetric-key encryption*

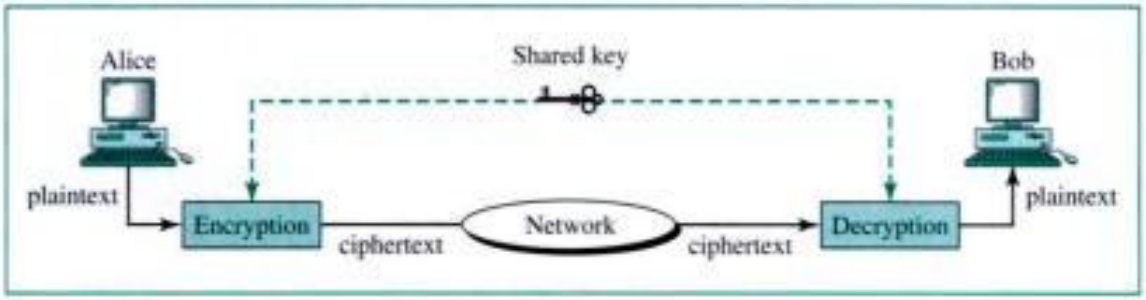

Using symmetric-key cryptography is very common for achieving privacy. Later in this chapter, we will see how to manage the distribution of symmetric keys.

Privacy with Public-Key Cryptography

We can also achieve privacy using public-key encryption. There are two keys: a private key and a public key. The private key is kept by the receiver. The public key is announced to the public. This is shown in Figure 30.3.

Figure 30.3 *Privacy using public-key encryption*

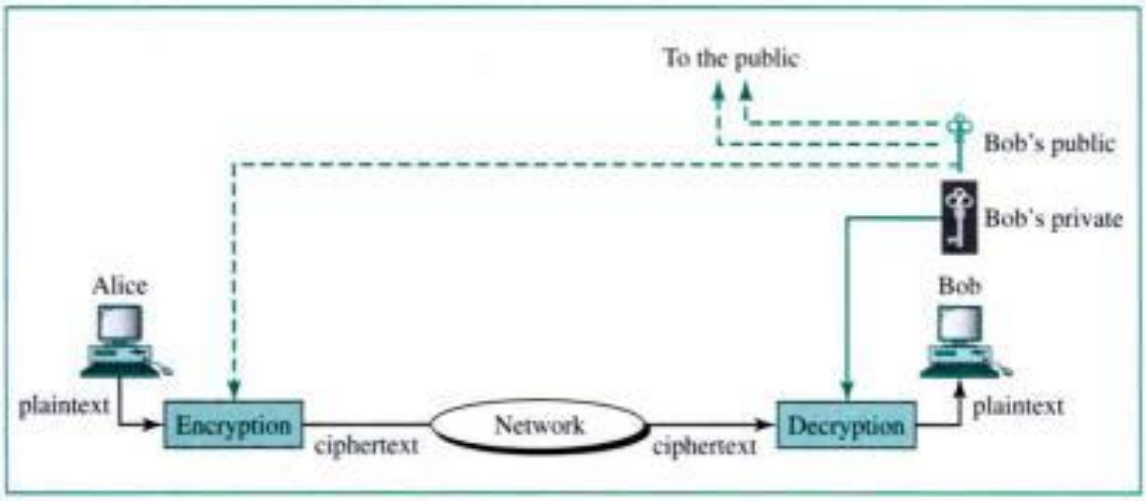

Copyrighted material

The main problem with public key encryption is its owner must be verified (certified). We will see how to solve this problem shortly.

Message Authentication

Message **authentication** means that the receiver needs to be sure of the sender's identity and that an imposter has not sent the message. We will see how digital signature can provide message authentication.

Integrity

Integrity means that the data must arrive at the receiver exactly as they were sent. There must be no changes during the transmission, either accidental or malicious. As more and more monetary exchanges occur over the Internet, integrity is crucial. For example, it would be disastrous if a request for transferring $100 changed to a request for $10,000 or $100,000. The integrity of the message must be preserved in a secure communication. We will see how digital signature can provide message integrity.

Nonrepudiation

Nonrepudiation means that a receiver must be able to prove that a received message came from a specific sender. The sender must not be able to deny sending a message that he or she, in fact, did send. The burden of proof falls on the receiver. For example, when a customer sends a message to transfer money from one account to another, the bank must have proof that the customer actually requested this transaction. We will see how digital signature can provide nonrepudiation.

30.2 DIGITAL SIGNATURE

We said that security provides four services in relation to a single message: privacy, authentication, integrity, and nonrepudiation. We have already discussed privacy. The other three can be achieved by using what is called **digital signature.**

The idea is similar to the signing of a document. When we send a document electronically, we can also sign it. We have two choices: We can sign the entire document, or we can sign a digest (condensed version) of the document.

Signing the Whole Document

Public-key encryption can be used to sign a document. However, the roles of the public and private keys are different here. The sender uses her private key to encrypt (sign) the message just as a person uses her signature (which is private in the sense that it is difficult to forge) to sign a paper document. The receiver, on the other hand, uses the public key of the sender to decrypt the message just as a person verifies from memory another person's signature.

In the digital signature, the private key is used for encryption and the public key for decryption. This is possible because the encryption and decryption algorithms used today,

Copyrighted material

Figure 30.5 *Signing the digest*

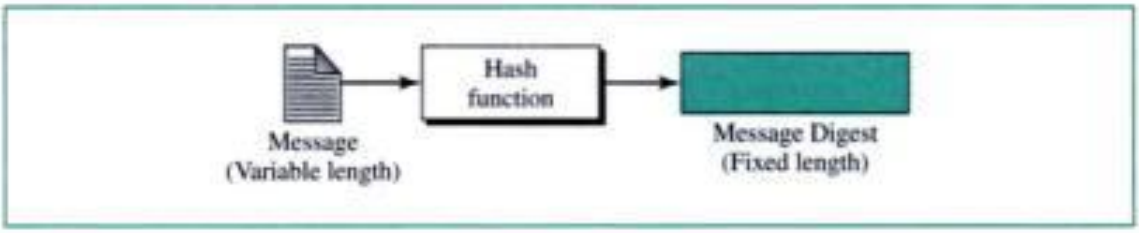

The two most common hash functions are called MD5 (Message Digest 5) and SHA-1 (Secure Hash Algorithm 1). The first one produces a 120-bit digest. The second produces a 160-bit digest.

Note that a hash function must have two properties to guarantee its success. First, hashing is one-way; the digest can only be created from the message, not vice versa. Second, hashing is a one-to-one function; there is little probability that two messages will create the same digest. We will see the reason for this condition shortly.

After the digest has been created, it is encrypted (signed) using the sender's private key. The encrypted digest is attached to the original message and sent to the receiver. Figure 30.6 shows the sender site.

Figure 30.6 *Sender site*

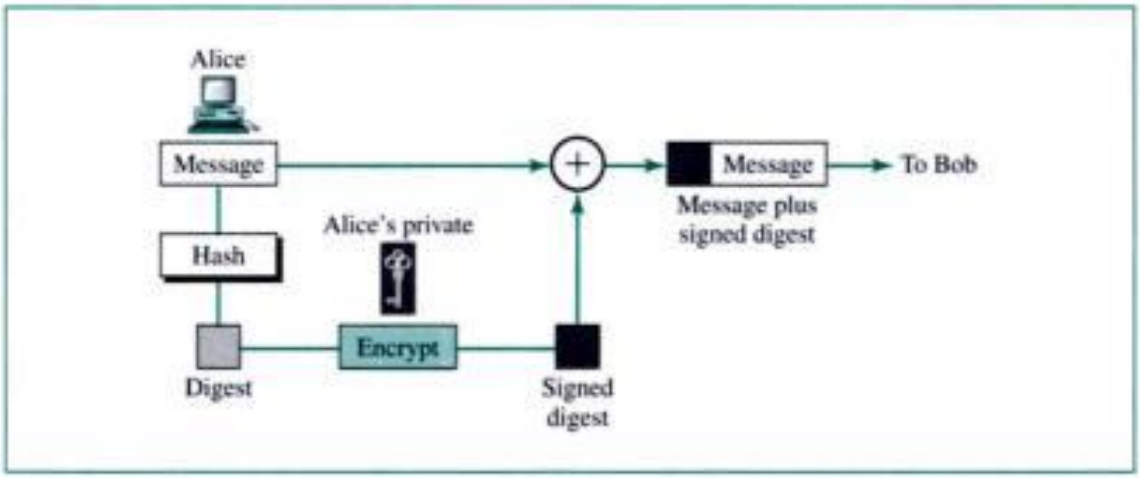

The receiver receives the original message and the encrypted digest. He separates the two. He applies the same hash function to the message to create a second digest. He also decrypts the received digest, using the public key of the sender. If the two digests are the same, all three security measures are preserved. Figure 30.7 shows the receiver site.

According to Section 30.1, we know that the digest is secure in terms of integrity, authentication, and nonrepudiation, but what about the message itself? The following reasoning shows that the message itself is also secured:

1. The digest has not been changed (integrity), and the digest is a representation of the message. So the message has not been changed (remember, it is improbable that two messages create the same digest). Integrity has been provided.

Copyrighted material

Figure 30.7 *Receiver site*

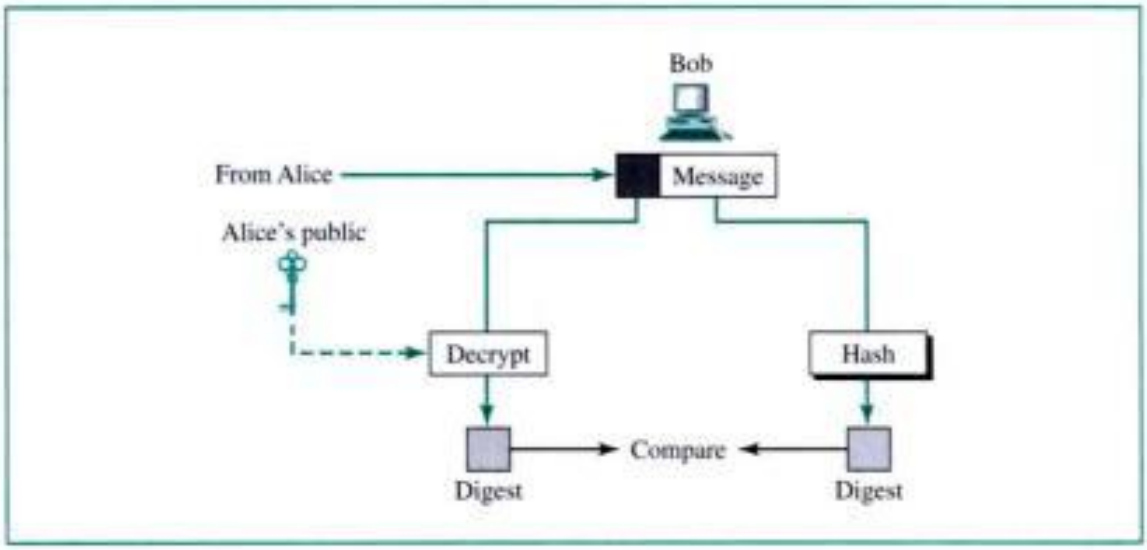

2. The digest comes from the true sender, so the message also comes from the true sender. If an intruder had initiated the message, the message would not have created the same digest (it is improbable that two messages create the same digest).
3. The sender cannot deny the message since she cannot deny the digest; the only message that can create that digest, with a very high probability, is the received message.

30.3 USER AUTHENTICATION

The main issue in security is key management, as we will see in Section 30.4. However, key management involves **user authentication.** We, therefore, briefly discuss these issues before talking about key management.

User Authentication with Symmetric-Key Cryptography

In this section, we discuss authentication as a procedure that verifies the identity of one entity for another. An *entity* can be a person, a process, a client, or a server; in our examples, entities are people. Specifically, Bob needs to verify the identity of Alice and vice versa. Note that entity authentication, as discussed here, is different from the message authentication that we discussed in the previous section. In message authentication, the identity of the sender is verified for each single message. In user authentication, the user identity is verified once for the entire duration of system access.

First Approach

In the first approach, Alice sends her identity and password in an encrypted message, using the symmetric key K_{AB}. Figure 30.8 shows the procedure. We have added the padlock with the corresponding key (shared key between Alice and Bob) to show that the message is encrypted with the key.

Is this a safe approach? Yes, to some extent. Eve, the intruder, cannot decipher the password or the data because she does not know K_{AB}. However, Eve can cause damage

Copyrighted material

Figure 30.8 *Using a symmetric key only*

without accessing the contents of the message. If Eve has an interest in the data message sent from Alice to Bob, she can intercept both the authentication message and the data message, store them, and resend them later to Bob. Bob has no way to know that this is a replay of a previous message. There is nothing in this procedure to guarantee the freshness of the message. As an example, suppose Alice's message instructs Bob (as a bank manager) to pay Eve for some job she has done. Eve can resend the message, thereby illegally getting paid twice for the same job. This is called a **replay attack.**

Second Approach

To prevent a replay attack (or playback attack), we add something to the procedure to help Bob distinguish a fresh authentication request from a repeated one. This can be done by using a **nonce.** A nonce is a large random number that is used only once, a one-time number. In this second approach, Bob uses a nonce to challenge Alice, to make sure that Alice is authentic and that someone (Eve) is not impersonating Alice. Figure 30.9 shows the procedure.

Figure 30.9 *Using a nonce*

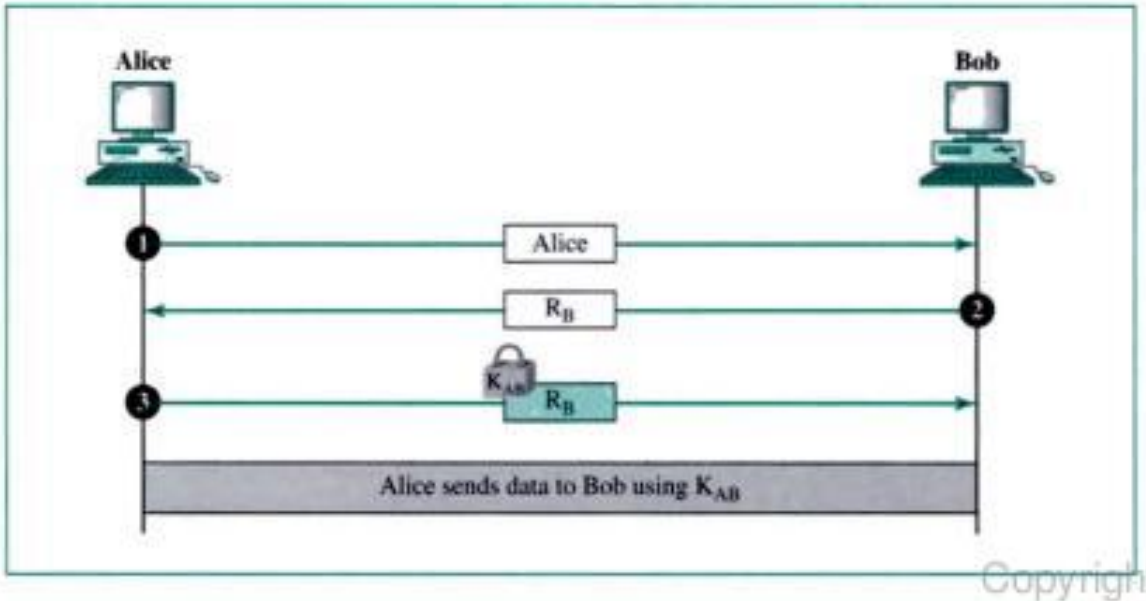

Copyrighted material

Authentication happens in three steps. First, Alice sends her identity, in plaintext, to Bob. Bob challenges Alice by sending a nonce, R_B, in plaintext. Alice responds to this message by sending back the nonce and encrypting it using the symmetric key. Eve cannot replay the message since R_B is valid only once.

Bidirectional Authentication

The second approach consists of a challenge and a response to authenticate Alice for Bob. Can we have **bidirectional authentication?** Figure 30.10 shows one method.

Figure 30.10 *Bidirectional authentication*

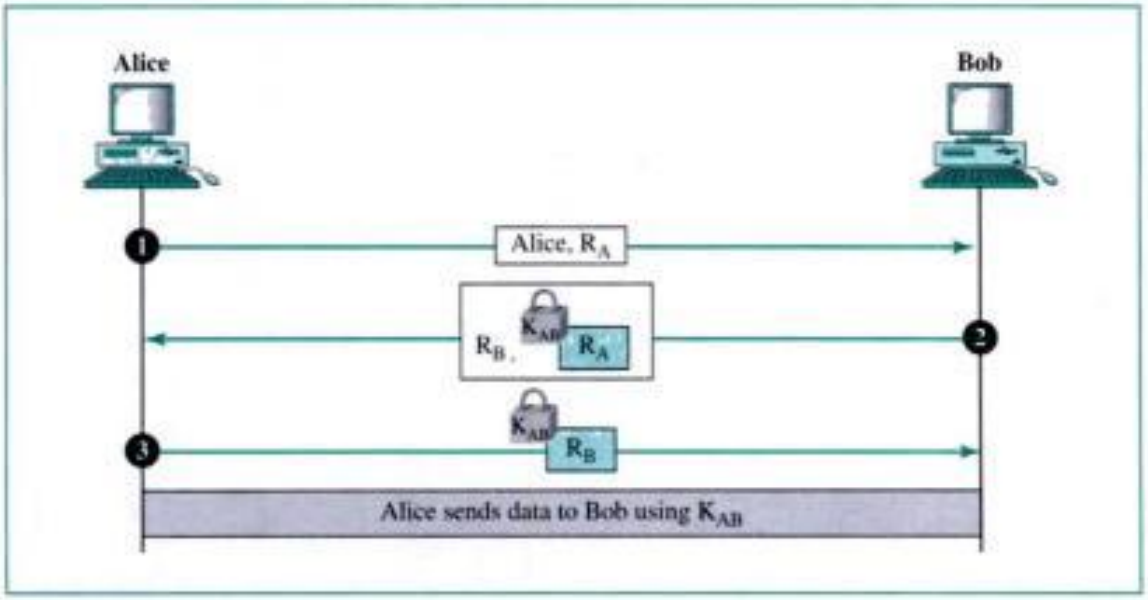

In the first step, Alice sends her identification and her nonce to challenge Bob. In the second step, Bob responds to Alice's challenge by sending his nonce to challenge her. In the third step, Alice responds to Bob's challenge. Is this authentication totally safe? It is on the condition that Alice and Bob use a different set of nonces for different sessions and do not allow multiple authentications to take place at the same time. Otherwise, this procedure can be the target of a **reflection attack;** we leave this as an exercise.

User Authentication with Public-Key Cryptography

We can use public-key cryptography to authenticate a user. In Figure 30.9, Alice can encrypt the message with her private key and let Bob use Alice's public key to decrypt the message and authenticate her. However, we have the man-in-the-middle (see next section) attack problem because Eve can announce her public key to Bob in place of Alice. Eve can then encrypt the message containing a nonce with her private key. Bob decrypts it with Eve's public key, which he believes is Alice's. Bob is fooled. Alice needs a better means to advertise her public key; Bob needs a better way to verify Alice's public key. We discuss public-key certification next.

Copyrighted material

can serve the entire world. There is no secrecy about these two numbers; both Alice and Bob know these magic numbers.

Procedure Figure 30.11 shows the procedure.

Figure 30.11 *Diffie-Hellman method*

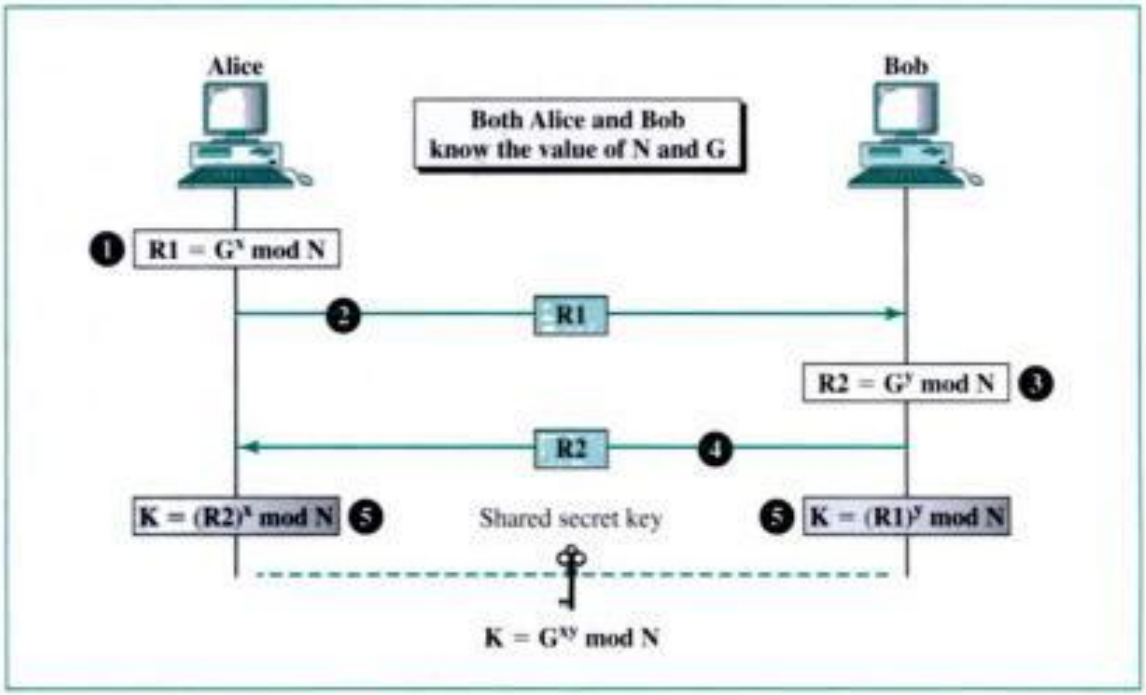

The steps are as follows:

Step 1 Alice chooses a large random number x and calculates $R1 = G^x \bmod N$.

Step 2 Alice sends R1 to Bob. Note that Alice does not send the value of x; she only sends R1.

Step 3 Bob chooses another large number y and calculates $R2 = G^y \bmod N$.

Step 4 Bob sends R2 to Alice. Again, note that Bob does not send the value of y; he only sends R2.

Step 5 Alice calculates $K = (R2)^x \bmod N$. Bob also calculates $K = (R1)^y \bmod N$. And K is the symmetric key for the session.

The reader may wonder why the value of K is the same since the calculations are different. The answer is an equality proved in number theory.

$$(G^x \bmod N)^y \bmod N = (G^y \bmod N)^x \bmod N = G^{xy} \bmod N$$

Bob has calculated $K = (R1)^y \bmod N = (G^x \bmod N)^y \bmod N = G^{xy} \bmod N$. Alice has calculated $K = (R2)^x \bmod N = (G^y \bmod N)^x \bmod N = G^{xy} \bmod N$. Both have reached the same value without Bob knowing the value of x or Alice knowing the value of y.

The symmetric (shared) key in the Diffie-Hellman protocol is $K = G^{xy} \bmod N$.

Copyrighted material

Example 1

Let us give an example to make the procedure clear. Our example uses small numbers, but note that in a real situation, the numbers are very large. Assume G = 7 and N = 23. The steps are as follows:

1. Alice chooses x = 3 and calculates $R1 = 7^3 \bmod 23 = 21$.
2. Alice sends the number 21 to Bob.
3. Bob chooses y = 6 and calculates $R2 = 7^6 \bmod 23 = 4$.
4. Bob sends the number 4 to Alice.
5. Alice calculates the symmetric key $K = 4^3 \bmod 23 = 18$.
6. Bob calculates the symmetric key $K = 21^6 \bmod 23 = 18$.

The value of K is the same for both Alice and Bob; $G^{xy} \bmod N = 7^{18} \bmod 23 = 18$.

Man-in-the-Middle Attack The Diffie-Hellman protocol is a very sophisticated symmetric-key creation algorithm. If x and y are very large numbers, it is extremely difficult for Eve to find the key knowing only N and G. An intruder needs to determine x and y if R1 and R2 are intercepted. But finding x from R1 and y from R2 are two difficult tasks. Even a sophisticated computer would need perhaps a long time to find the key by trying different numbers. In addition, Alice and Bob change the key the next time they need to communicate.

However, the protocol does have a weakness. Eve does not have to find the values of x and y to attack the protocol. She can fool Alice and Bob by creating two keys: one between herself and Alice and another between herself and Bob. Figure 30.12 shows the situation.

Figure 30.12 *Man-in-the-middle attack*

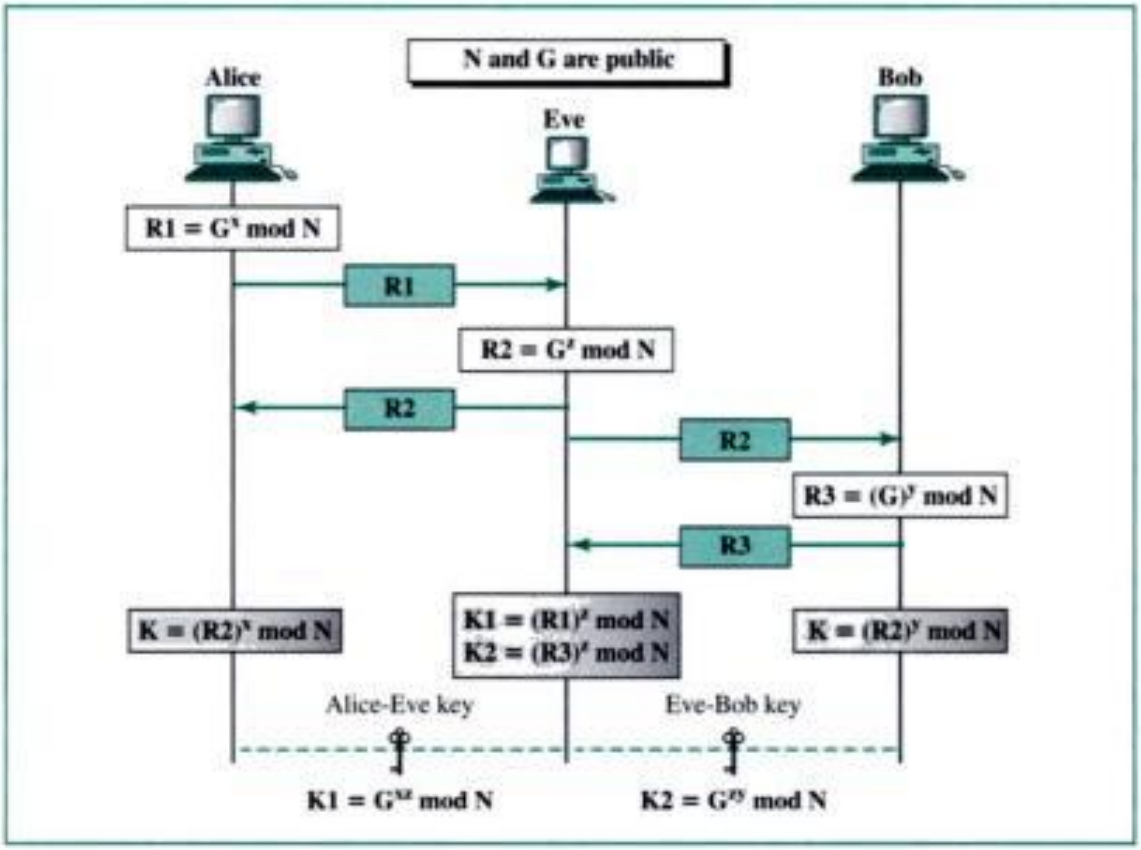

Copyrighted material

Figure 30.14 *Needham-Schroeder protocol*

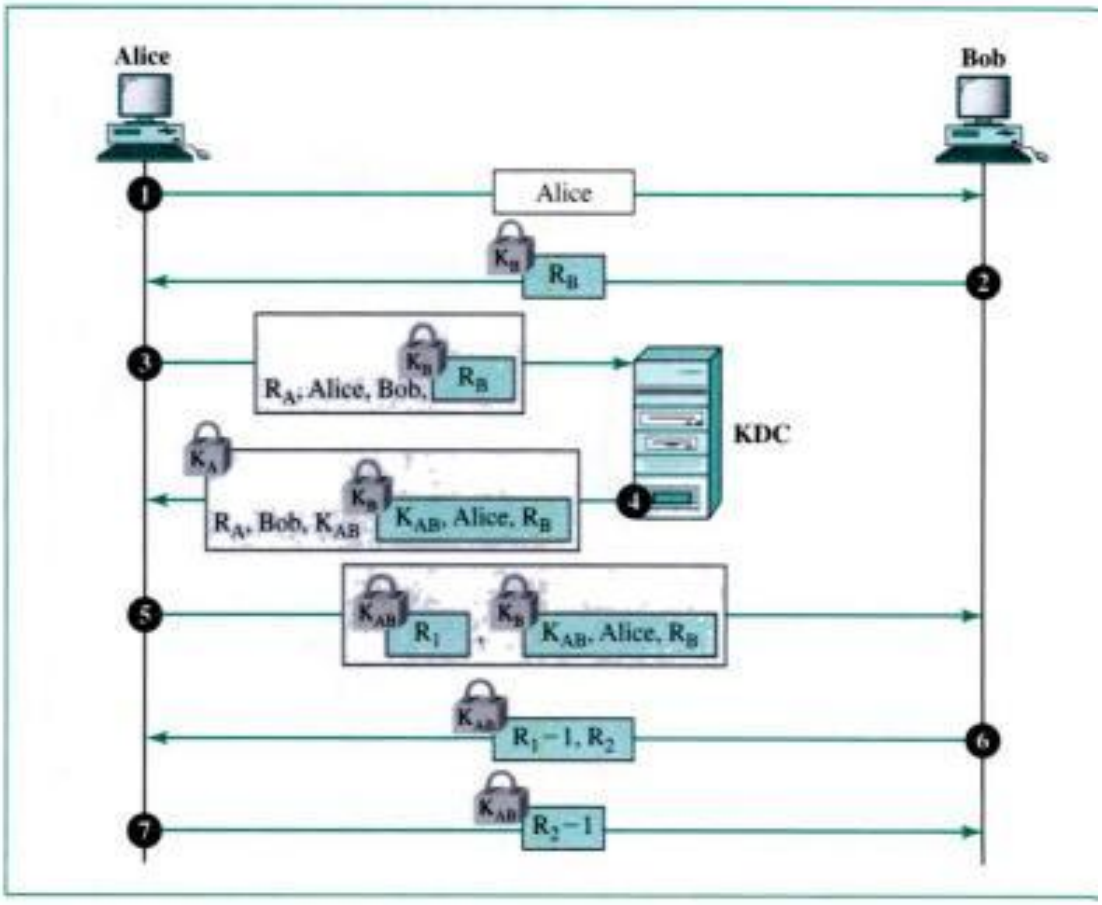

Step 6 Bob responds to Alice's challenge and sends his challenge to Alice (R2). N that the response to Alice's challenge is the value $R_1 - 1$; this ensures that Bob decrypted the encrypted R_1. In other words, the new encryption ensures that imposter has not sent the exact encrypted message back.

Step 7 Alice responds to Bob's challenge. Again, note that the response carries R_2 instead of R_2.

Otway-Rees Protocol A third approach is the **Otway-Rees protocol,** another e gant protocol, that has even fewer steps. Figure 30.15 shows this five-step protoc The following briefly describes the steps.

Step 1 Alice sends a message to Bob that includes a common nonce R, the identi of Alice and Bob, and a ticket for KDC that includes Alice's nonce R_A (a challe for KDC to use), a copy of the common nonce R, and the identities of Alice and B

Step 2 Bob creates the same type of ticket, but with his own nonce R_B; both tick are sent to KDC.

Step 3 KDC creates a message that contains R, the common nonce, a ticket for A and a ticket for Bob; the message is sent to Bob. The tickets contain the correspond nonce, R_A or R_B, and the session key K_{AB}.

Step 4 Bob sends Alice her ticket.

Step 5 Alice sends a message encrypted with her session key K_{AB}.

Copyrighted material

Figure 30.15 *Otway-Rees protocol*

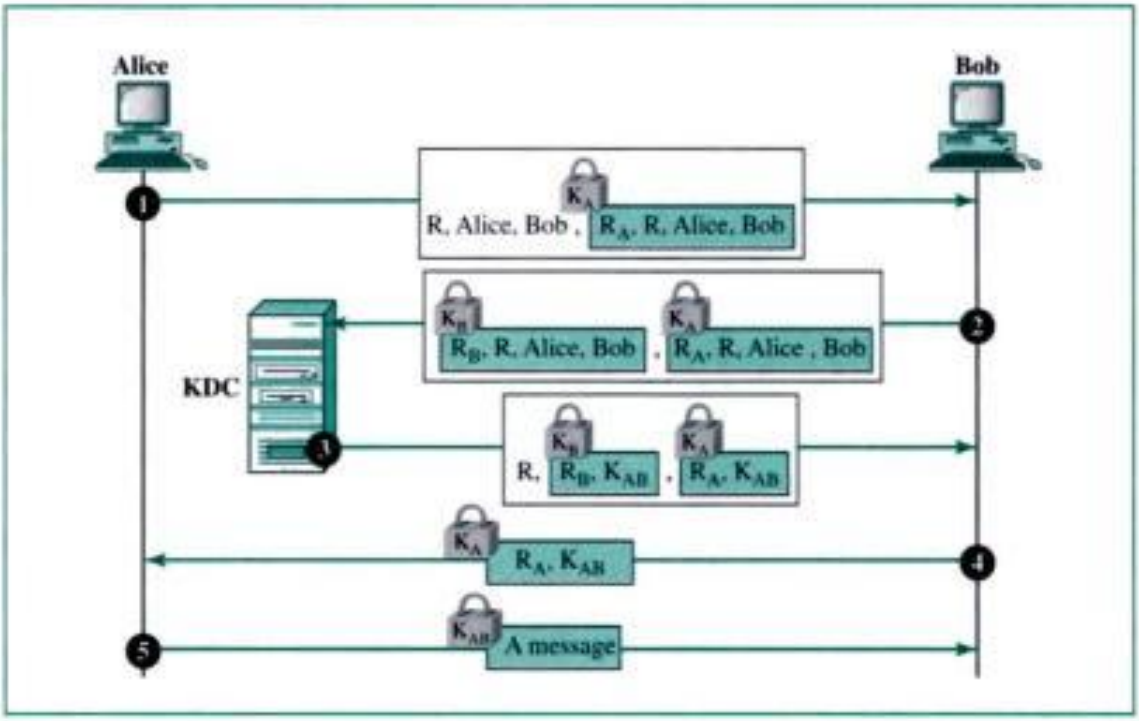

Public-Key Certification

In public-key cryptography, people do not need to know a symmetric shared key. If Alice wants to send a message to Bob, she only needs to know Bob's public key, which is open to the public and available to everyone. If Bob needs to send a message to Alice, he only needs to know Alice's public key, which is also known to everyone. In public-key cryptography, everyone shields a private key and advertises a public key.

In public-key cryptography, everyone has access to everyone's public key.

The Problem

In public-key cryptography, everybody who expects to receive a message from someone else needs to somehow advertise his or her public key to the sender of the message. The problem is how to advertise the public key and make it safe from Eve's interference. If Bob sends his public key to Alice, Eve may intercept it and send her (Eve's) own public key to Alice. Alice, assuming that this is Bob's public key, encrypts a message for Bob with this key and sends it to Bob. Eve again intercepts and decrypts the message with her private key and knows what Alice has sent to Bob. Eve can even put her public key online and claim that this is Bob's public key.

Certification Authority

Bob wants two things: He wants people to know his public key, and he wants no one to accept a public key forged as Bob's. Bob can go to a **certification authority (CA),** a

Copyrighted material

Figure 30.18 *Kerberos example*

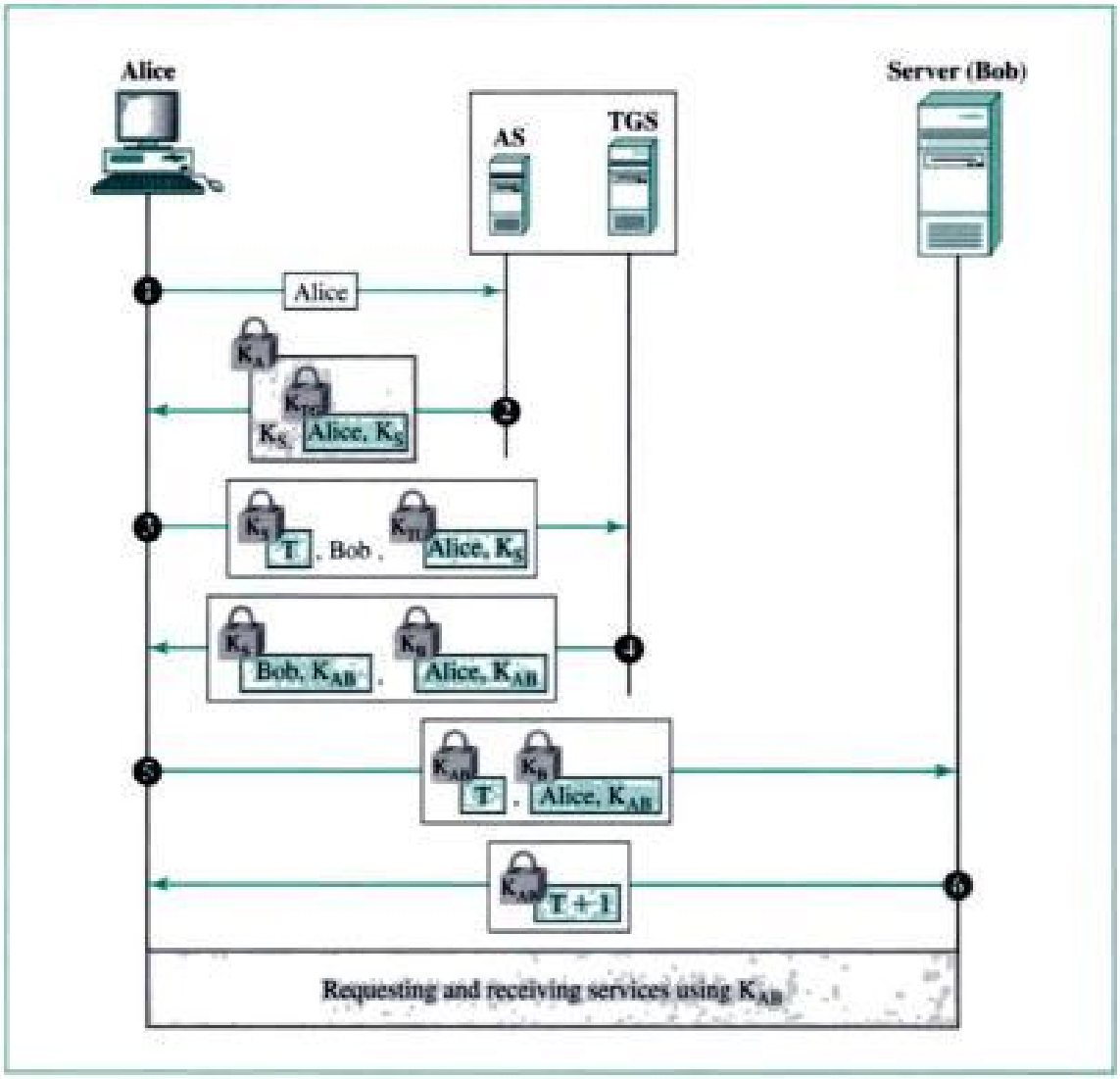

Step 2

The AS sends a message encrypted with Alice's symmetric key K_A. The message contains two items: a session key K_S that is used by Alice to contact TGS and a ticket for TGS that is encrypted with the TGS symmetric key K_{TG}. Alice does not know K_A, but when the message arrives, she types her password. The password and the appropriate algorithm together create K_A if the password is correct. The password is then immediately destroyed; it is not sent to the network, and it does not stay in the terminal. It is only used for a moment to create K_A. The process now uses K_A to decrypt the message sent; K_S and the ticket are extracted.

Step 3

Alice now sends three items to the TGS. The first is the ticket received from AS. The second is the name of the real server (Bob), and the third is a timestamp which is encrypted by K_S. The timestamp prevents a replay by Eve.

Copyrighted material

23. A _____ is a trusted third party that establishes a symmetric key between two parties who wish to communicate.
    a. KDC
    b. CA
    c. PKI
    d. TGS
24. In the _____ protocol, a nonce is decremented by 1 so that an intruder cannot send the exact same message a second time.
    a. Diffie-Hellman
    b. Needham-Schroeder
    c. Otway-Rees
    d. Kerberos
25. _____ is an authentication protocol that needs an authentication server and a ticket-granting server.
    a. Diffie-Hellman
    b. Needham-Schroeder
    c. Otway-Rees
    d. Kerberos
26. The _____ is the KDC in the Kerberos protocol.
    a. AS
    b. TGS
    c. Real server
    d. Data server
27. The _____ issues tickets for the real server.
    a. AS
    b. TGS
    c. Real server
    d. Data server
28. In _____-key cryptography, everyone has access to all the public keys.
    a. Private
    b. Symmetric
    c. Public
    d. Certified
29. A protocol called _____ describes the certificate issued by a CA in a structural way.
    a. X.509
    b. CA level 1
    c. KDC
    d. Kerberos
30. Windows 2000 uses an authentication protocol called _____.
    a. Diffie-Hellman
    b. Needham-Schroeder

Copyrighted material

c. Otway-Rees

d. Kerberos

Exercises

31. Add a layer of symmetric-key encryption/decryption to Figure 30.4 to provide privacy.
32. Add a layer of public-key encryption/decryption to Figure 30.4 to provide privacy.
33. Show that G^{xy} is the same as $(G^x)^y$ using G = 11, x = 3, and y = 4.
34. Prove that the result of G^{xy} mod N is the same as the result of $(G^x \bmod N)^y \bmod N$, using G = 7, x = 2, y = 3, and N = 11.
35. The fact that the result of G^{xy} mod N is the same as the result of $(G^x \bmod N)^y \bmod N$ can tremendously simplify the calculation of G^{xy} mod N. Use this fact to calculate 7^{18} mod 11. *Hint:* Factor 18 and do three calculations.
36. What is the value of the symmetric key in the Diffie-Hellman protocol if G = 7, N = 23, x = 3, and y = 5?
37. What are the values of R_1 and R_2 in the Diffie-Hellman protocol if G = 7, N = 23, x = 3, and y = 5?
38. In the Diffie-Hellman protocol, what happens if x and y have the same value? That is, have Alice and Bob accidentally chosen the same number? Are the values of R1 and R2 the same? Is the value of the session key calculated by Alice and Bob the same? Use an example to prove your claims.
39. Which of the following numbers is a good candidate for N in the Diffie-Hellman protocol? 7, 11, 21, 33, 37, 15, or 47
40. In Figure 30.13 (First approach using KDC), what happens if the ticket for Bob is not encrypted in step 2 with K_B, but is encrypted by K_{AB} in step 3?
41. Why is there a need for four nonces in the Needham-Schroeder protocol?
42. In the Needham-Schroeder protocol, how is Alice is authenticated by the KDC? How is Bob authenticated by the KDC? How is the KDC authenticated for Alice? How is the KDC authenticated for Bob? How is Alice authenticated for Bob? How is Bob authenticated for Alice?
43. Can you explain why in the Needham-Schroeder protocol, Alice is the party that is in contact with the KDC; but in the Otway-Rees protocol, Bob is the party that is in contact with the KDC?
44. There are four nonces (R_A, R_B, R_1, and R_2) in the Needham-Schroeder protocol, but only three nonces (R_A, R_B, and R_1) in the Otway-Rees protocol. Can you explain why there is a need for one extra nonce, R_2, in the first protocol?
45. Why do we need only one timestamp in Kerberos instead of four nonces in Needham-Schroeder or three nonces in Otway-Rees?
46. In the bidirectional approach to authentication in Figure 30.10, if multiple-session authentication is allowed, Eve intercepts the R_B nonce from Bob (in the second session) and sends it as Alice's nonce for a second session. Bob, without checking that this nonce is the same as the one he sent, encrypts R_B and puts it in a message with his nonce. Eve uses the encrypted R_B and pretends that she is Alice, continuing with the first session and responding with the encrypted R_B. This is called a reflection attack. Show the steps in this scenario.

Copyrighted material

Security Association

IPSec requires a logical connection between two hosts using a *signaling protocol*, called **Security Association (SA).** In other words, IPSec needs the connectionless IP protocol changed to a connection-oriented protocol before security can be applied. An SA connection is a simplex (unidirectional) connection between a source and destination. If a duplex (bidirectional) connection is needed, two SA connections are required, one in each direction. An SA connection is uniquely defined by three elements:

1. A 32-bit security parameter index (SPI), which acts as a virtual circuit identifier in connection-oriented protocols such as Frame Relay or ATM.
2. The type of the protocol used for security. We will see shortly that IPSec defines two alternative protocols: AH and ESP.
3. The source IP address.

Two Modes

IPSec operates at two different modes: transport mode and tunnel mode. The mode defines where the IPSec header is added to the IP packet.

Transport Mode

In this mode, the IPSec header is added between the IP header and the rest of the packet, as shown in Figure 31.1.

Figure 31.1 *Transport mode*

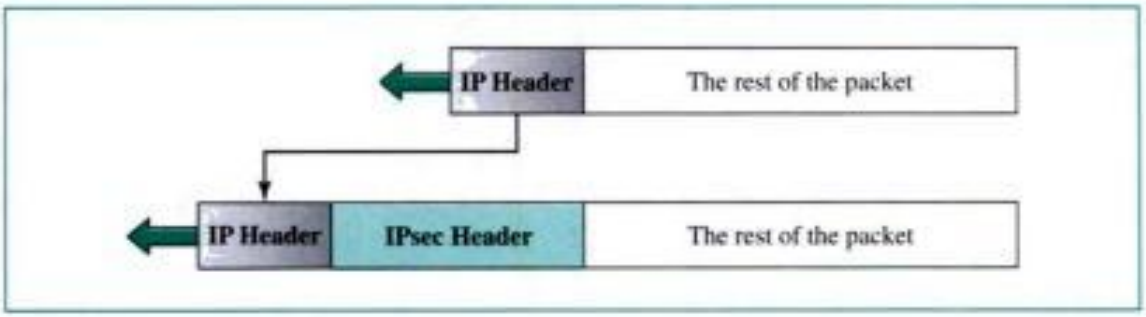

Tunnel Mode

In this mode, the IPSec header is placed in front of the original IP header. A new IP header is added in front. The IPSec header, the preserved IP header, and the rest of the packet are treated as the payload. Figure 31.2 shows the original and the new IP packet.

Two Security Protocols

IPSec defines two protocols: Authentication Header (AH) protocol and Encapsulating Security Payload (ESP) protocol. We discuss both of these protocols here.

Copyrighted material

Figure 31.4 *ESP*

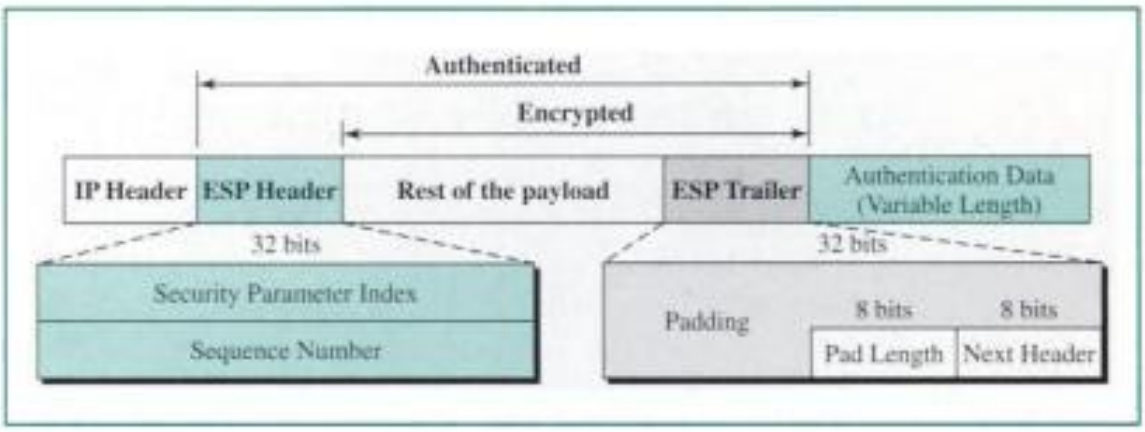

3. The ESP header is added.
4. The ESP header, payload, and ESP trailer are used to create the authentication data.
5. The authentication data are added at the end of the ESP trailer.
6. The IP header is added after changing the protocol value to 50.

The fields for the header and trailer are as follows:

- **Security parameter index.** The 32-bit security parameter index field is similar to that defined for the AH protocol.
- **Sequence number.** The 32-bit sequence number field is similar to that defined for the AH protocol.
- **Padding.** This variable-length field (0 to 255 bytes) of 0s serves as padding.
- **Pad length.** The 8-bit pad length field defines the number of padding bytes. The value is between 0 and 255; the maximum value is rare.
- **Next header.** The 8-bit next-header field is similar to that defined in the AH protocol. It serves the same purpose as the protocol field in the IP header before encapsulation.
- **Authentication data.** Finally, the authentication data field is the result of applying an authentication scheme to parts of the datagram. Note the difference between the authentication data in AH and ESP. In AH, part of the IP header is included in the calculation of the authentication data; in ESP, it is not.

ESP provides source authentication, data integrity, and privacy.

IPv4 and IPv6

IPSec supports both IPv4 and IPv6. In IPv6, however, AH and ESP are part of the extension header.

AH versus ESP

The ESP protocol was designed after the AH protocol was already in use. ESP does whatever AH does with additional functionality (privacy). The question is, Why do we need AH? The answer is that we don't. However, the implementation of AH is already

Copyrighted material

included in some commercial products, which means that AH will remain part of the Internet until the products are phased out.

31.2 TRANSPORT LAYER SECURITY

Transport Layer Security (TLS) was designed to provide security at the transport layer. TLS was derived from a security protocol called Secure Sockets Layer (SSL), designed by Netscape to provide security on the WWW. TLS is a nonproprietary version of SSL designed by IETF. For transactions on the Internet, a browser needs the following:

1. The customer needs to be sure that the server belongs to the actual vendor, not an imposter. For example, a customer does not want to give an imposter her credit card number. In other words, the server must be authenticated.
2. The customer needs to be sure that the contents of the message are not modified during transition. A bill for $100 must not be changed to $1000. The integrity of the message must be preserved.
3. The customer needs to be sure that an imposter does not intercept sensitive information such as a credit card number. There is a need for privacy.

There are other optional security aspects that can be added to the above list. For example, the vendor may need to authenticate the customer. TLS can provide additional features to cover these aspects of security.

Position of TLS

TLS lies between the application layer and the transport layer (TCP), as shown in Figure 31.5.

Figure 31.5 *Position of TLS*

The application layer protocol, in this case HTTP, uses the services of TLS, and TLS uses the services of the transport layer.

Two Protocols

TLS is actually two protocols: the handshake protocol and the data exchange (sometimes called the record) protocol.

Copyrighted material

Handshake Protocol

The **handshake protocol** is responsible for negotiating security, authenticating the server to the browser, and (optionally) defining other communication parameters. The handshake protocol defines the exchange of a series of messages between the browser and server. We discuss a simplified version, as shown in Figure 31.6.

Figure 31.6 *Handshake protocol*

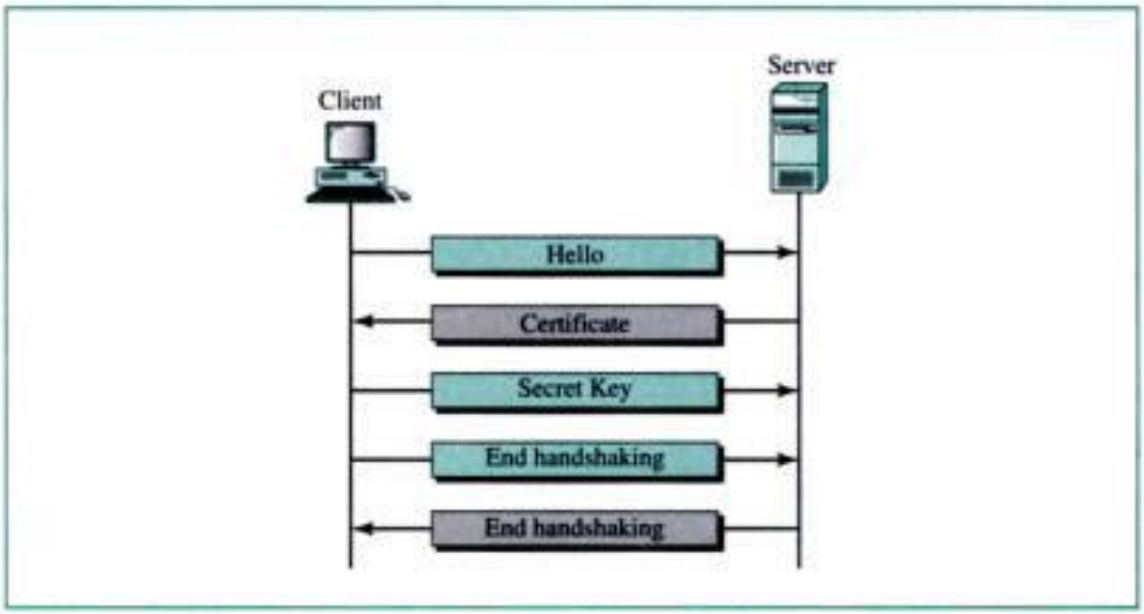

1. The browser sends a *hello* message that includes the TLS version and some preferences.
2. The server sends a *certificate* message that includes the public key of the server. The public key is certified by some certification authority, which means that the public key is encrypted by a CA private key. The browser has a list of CAs and their public keys. It uses the corresponding key to decrypt the certificate and finds the server public key. This also authenticates the server because the public key is certified by the CA.
3. The browser generates a secret key, encrypts it with the server public key, and sends it to the server.
4. The browser sends a message, encrypted by the secret key, to inform the server that handshaking is terminating from the browser side.
5. The server decrypts the secret key using its private key and decrypts the message using the secret key. It then sends a message, encrypted by the secret key, to inform the browser that handshaking is terminating from the server side.

Note that handshaking uses the public key for two purposes: to authenticate the server and to encrypt the secret key, which is used in the data exchange protocol.

Data Exchange Protocol

The **data exchange** (record) **protocol** uses the secret key to encrypt the data for secrecy and to encrypt the message digest for integrity. The details and specification of algorithms are agreed upon during the handshake phase.

Copyrighted material

31.3 APPLICATION LAYER SECURITY: PGP

The implementation of security at the application layer is more feasible and simpler, particularly when the Internet communication involves only two parties, as in the case of email and TELNET. The sender and the receiver can agree to use the same protocol and to use any type of security services they desire. In this section, we discuss one protocol used at the application layer to provide security: PGP.

Pretty Good Privacy (PGP) was invented by Phil Zimmermann to provide all four aspects of security (privacy, integrity, authentication, and nonrepudiation) in the sending of email.

PGP uses digital signature (a combination of hashing and public-key encryption) to provide integrity, authentication, and nonrepudiation. It uses a combination of secret-key and public-key encryption to provide privacy. Specifically, it uses one hash function, one secret key, and two private-public key pairs. See Figure 31.7.

Figure 31.7 *PGP at the sender site*

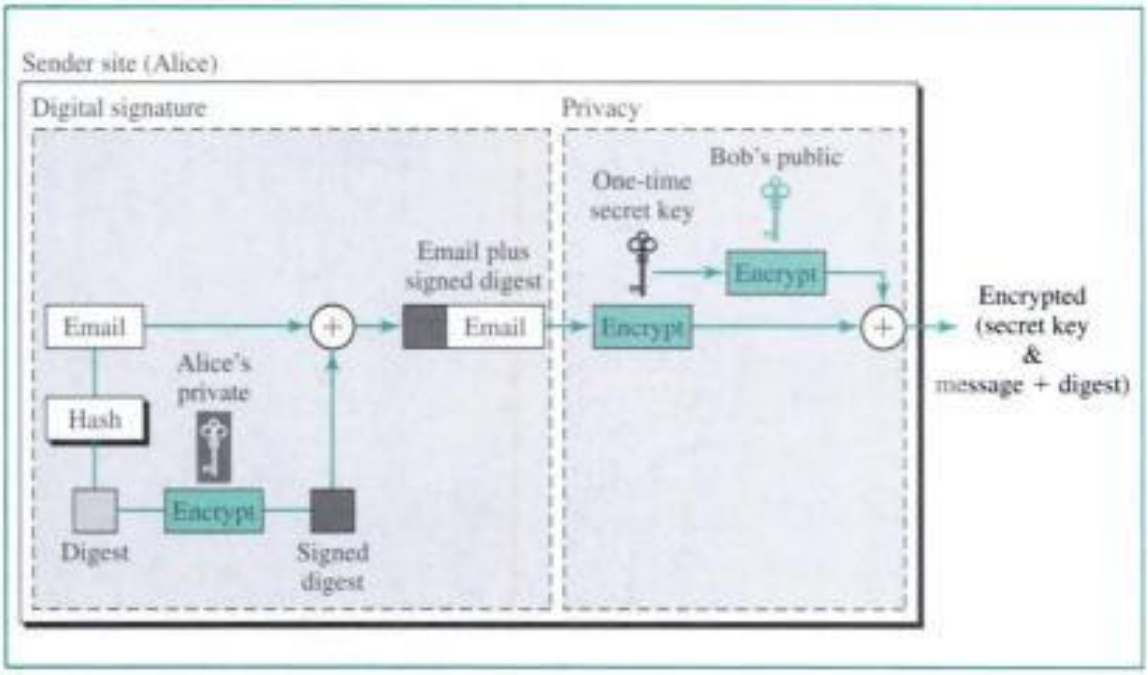

The figure shows how PGP creates secure email at the sender site. The email message is hashed to create a digest. The digest is encrypted (signed) using Alice's private key. The message and the digest are encrypted using the one-time secret key created by Alice. The secret key is encrypted using Bob's public key and is sent together with the encrypted combination of message and digest.

Figure 31.8 shows how PGP uses hashing and a combination of three keys to extract the original message at the receiver site. The combination of encrypted secret key and message plus digest is received. The encrypted secret key first is decrypted (using Bob's private key) to get the one-time secret key created by Alice. The secret key then is used to decrypt the combination of the message plus digest.

Copyrighted material

computer. When the user client process sends a message, the **proxy firewall** runs a server process to receive the request. The server opens the packet at the application level and finds out if the request is legitimate. If it is, the server acts as a client process and sends the message to the real server in the corporation. If it is not, the message is dropped and an error message is sent to the external user. In this way, the requests of the external users are filtered based on the contents at the application layer. Figure 31.11 shows a proxy firewall implementation.

Figure 31.11 *Proxy firewall*

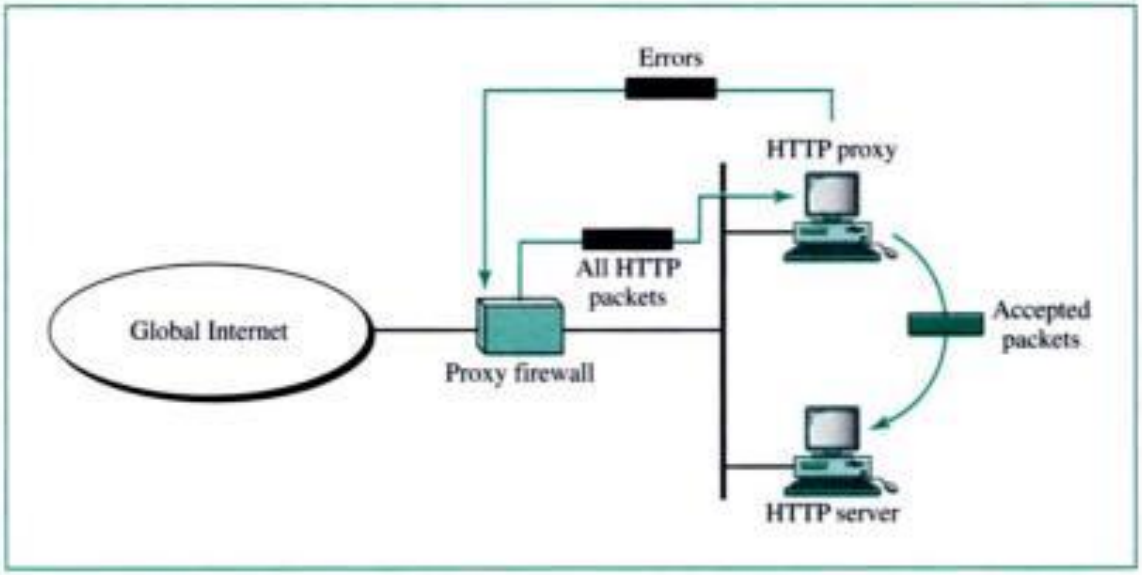

A proxy firewall filters at the application layer.

31.5 VIRTUAL PRIVATE NETWORK

Virtual private network (VPN) is a technology that is gaining popularity among large organizations that use the global Internet for both intra- and interorganization communication, but require privacy in their internal communication.

Private Networks

A private network is designed for use inside an organization. It allows access to shared resources and, at the same time, provides privacy. Before we discuss some aspects of these networks, let us define two commonly used related terms: *intranet* and *extranet*.

Intranet

An **intranet** is a private network (LAN) that uses the Internet model. However, access to the network is limited to the users inside the organization. The network uses application programs defined for the global Internet, such as HTTP, and may have Web servers, print servers, file servers, and so on.

Copyrighted material

Extranet

An **extranet** is the same as an intranet with one major difference: Some resources may be accessed by specific groups of users outside the organization under the control of the network administrator. For example, an organization may allow authorized customers access to product specifications, availability, and online ordering. A university or a college can allow distance learning students access to the computer lab after passwords have been checked.

Addressing

A private network that uses the Internet model must use IP addresses. Three choices are available:

1. The network can apply for a set of addresses from the Internet authorities and use them without being connected to the Internet. This strategy has an advantage. If in the future the organization decides to be connected to the Internet, it can do so with relative ease. However, there is also a disadvantage: The address space is wasted.
2. The network can use any set of addresses without registering with the Internet authorities. Because the network is isolated, the addresses do not have to be unique. However, this strategy has a serious drawback: Users might mistakenly confuse the addresses as part of the global Internet.
3. To overcome the problems associated with the first and second strategies, the Internet authorities have reserved three sets of addresses, shown in Table 31.1.

Table 31.1 *Addresses for private networks*

Prefix	*Range*	*Total*
10/8	10.0.0.0 to 10.255.255.255	2^{24}
172.16/12	172.16.0.0 to 172.31.255.255	2^{20}
192.168/16	192.168.0.0 to 192.168.255.255	2^{16}

Any organization can use an address out of this set without permission from the Internet authorities. Everybody knows that these reserved addresses are for private networks. They are unique inside the organization, but they are not unique globally. No router will forward a packet that has one of these addresses as the destination address.

Achieving Privacy

To achieve privacy, organizations can use one of three strategies: private networks, hybrid networks, and virtual private networks.

Private Networks

An organization that needs privacy when routing information inside the organization can use a **private network** as discussed previously. A small organization with one single site can use an isolated LAN. People inside the organization can send data to one another that totally remain inside the organization, secure from outsiders. A larger organization with

Copyrighted material

several sites can create a private internet. The LANs at different sites can be connected to each other using routers and leased lines. In other words, an internet can be made out of private LANs and private WANs. Figure 31.12 shows such a situation for an organization with two sites. The LANs are connected to each other using routers and one leased line.

Figure 31.12 *Private network*

In this situation, the organization has created a private internet that is totally isolated from the global Internet. For end-to-end communication between stations at different sites, the organization can use the Internet model. However, there is no need for the organization to apply for IP addresses with the Internet authorities. It can use private IP addresses. The organization can use any IP class and assign network and host addresses internally. Because the internet is private, duplication of addresses by another organization in the global Internet is not a problem.

Hybrid Networks

Today, most organizations need to have privacy in intraorganization data exchange, but, at the same time, they need to be connected to the global Internet for data exchange with other organizations. One solution is the use of a **hybrid network.** A hybrid network allows an organization to have its own private internet and, at the same time, access to the global Internet. Intraorganization data are routed through the private internet; interorganization data are routed through the global Internet. Figure 31.13 shows an example of this situation.

An organization with two sites uses routers R1 and R2 to connect the two sites privately through a leased line; it uses routers R3 and R4 to connect the two sites to the rest of the world. The organization uses global IP addresses for both types of communication. However, packets destined for internal recipients are routed only through routers R1 and R2. Routers R3 and R4 route the packets destined for outsiders.

Virtual Private Networks

Both private and hybrid networks have a major drawback: cost. Private wide-area networks (WANs) are expensive. To connect several sites, an organization needs several leased lines, which means a high monthly fee. One solution is to use the global Internet for both private and public communications. A technology called virtual private network (VPN) allows organizations to use the global Internet for both purposes.

Copyrighted material

c. PGP
d. TLS

17. The handshake protocol and data exchange protocol are part of _____.
    a. CA
    b. KDC
    c. TLS
    d. SSH
18. _____ is a collection of protocols that provide security at the IP layer level.
    a. TLS
    b. SSH
    c. PGP
    d. IPSec
19. _____ is an IP layer security protocol that only provides integrity and authentication.
    a. AH
    b. PGP
    c. ESP
    d. IPSec
20. _____ is an IP layer security protocol that provides privacy as well as integrity and authentication.
    a. AH
    b. PGP
    c. ESP
    d. IPSec
21. An IP datagram carries an authentication header if the _____ field of the IP header has a value of 51.
    a. Next-header
    b. Protocol
    c. Security parameter index
    d. Sequence number
22. A _____ can forward or block packets based on the information in the network layer and transport layer headers.
    a. Proxy firewall
    b. Packet-filter firewall
    c. Message digest
    d. Private key
23. The _____ field in the authentication header and the ESP header define the security method used in creating the authentication data.
    a. Padding
    b. Sequence number
    c. Authentication data
    d. SPI

Copyrighted material

c. Authenticated; encrypted

d. Encrypted; authenticated

32. An _____ is a private network with no external access that uses the TCP/IP suite.

a. Internet

b. internet

c. Intranet

d. Extranet

33. An _____ is a private network with limited external access that uses the TCP/IP suite.

a. Internet

b. internet

c. Intranet

d. Extranet

Exercises

34. Show the values of AH fields in Figure 31.3. Assume authentication data are only 128 bytes.
35. Show the values of ESP header and trailer fields in Figure 31.4.
36. Draw Figure 31.3 if AH is used in the tunnel mode.
37. Draw Figure 31.4 if ESP is used in the tunnel mode.
38. Draw a figure to show the position of AH in IPv6.
39. Draw a figure to show the position of ESP in IPv6.
40. Compare the handshaking protocol in Figure 31.6 with authentication protocols we discussed in Chapter 30. Can you find a protocol in Chapter 30 which is similar to the handshaking protocol?
41. The PGP protocol in Figure 31.7 uses three keys. Explain the purpose of each.
42. Does the PGP protocol need the services of a KDC? Explain your answer.
43. Does the PGP protocol need the services of a CA? Explain your answer.
44. Can a VPN use IPsec in transport mode? Explain your answer.

Copyrighted material

APPENDIX A

ASCII Code

The American Standard Code for Information Interchange (ASCII) is the most commonly used code for encoding printable and nonprintable (control) characters.

ASCII uses 7 bits to encode each character. It can therefore represent up to 128 characters. Table A.1 lists the ASCII characters and their codes in both binary and hexadecimal forms.

Table A.1 *ASCII table*

Decimal	*Hexadecimal*	*Binary*	*Character*	*Description*
0	00	0000000	NUL	Null
1	01	0000001	SOH	Start of header
2	02	0000010	STX	Start of text
3	03	0000011	ETX	End of text
4	04	0000100	EOT	End of transmission
5	05	0000101	ENQ	Enquiry
6	06	0000110	ACK	Acknowledgment
7	07	0000111	BEL	Bell
8	08	0001000	BS	Backspace
9	09	0001001	HT	Horizontal tab
10	0A	0001010	LF	Line feed
11	0B	0001011	VT	Vertical tab
12	0C	0001100	FF	Form feed
13	0D	0001101	CR	Carriage return
14	0E	0001110	SO	Shift out
15	0F	0001111	SI	Shift in
16	10	0010000	DLE	Data link escape
17	11	0010001	DC1	Device control 1
18	12	0010010	DC2	Device control 2
19	13	0010011	DC3	Device control 3

Copyrighted material

APPENDIX B

Numbering Systems and Transformation

Today's computers make use of four numbering systems: decimal, binary, octal, and hexadecimal. Each has advantages for different levels of digital processing. In Section B.1, we describe each of the four systems. In Section B.2, we show how a number in one system can be transformed to a number in another system.

B.1 NUMBERING SYSTEMS

All the numbering systems examined here are *positional*, meaning that the position of a symbol in relation to other symbols determines its value. Within a number, each symbol is called a digit (decimal digit, binary digit, octal digit, or hexadecimal digit). For example, the decimal number 798 has three decimal digits. Digits are arranged in order of ascending value, moving from the lowest value on the right to the highest on the left. For this reason, the leftmost digit is referred to as the most significant and the rightmost as the least significant digit (see Fig. B.1). For example, in the decimal number 1234, the most significant digit is the 1, and the least significant is the 4.

Figure B.1 *Digit positions and their significance*

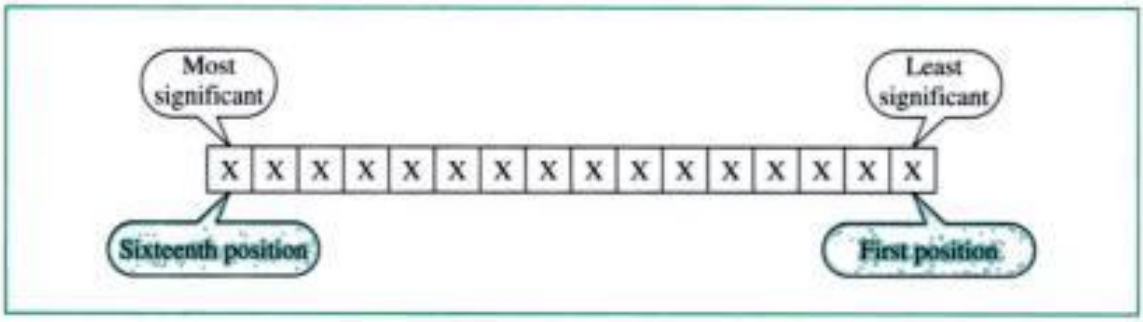

Decimal Numbers

The decimal system is the one most familiar to us in everyday life. All our terms for indicating countable quantities are based on it, and in fact when we speak of other

Copyrighted material

numbering systems, we tend to refer to their quantities by their decimal equivalents. Also called *base-10*, the name *decimal* is derived from the Latin stem *deci*, meaning 10. The decimal system uses 10 symbols to represent quantitative values: 0, 1, 2, 3, 4, 5, 6, 7, 8, and 9.

Decimal numbers use 10 symbols: 0, 1, 2, 3, 4, 5, 6, 7, 8, and 9.

Weight and Value

In the decimal system, each weight equals 10 raised to the power of its position. The weight of the first position, therefore, is 10^0, which equals 1. So the value of a digit in the first position is equal to the value of the digit times 1. The weight of the second position is 10^1, which equals 10. The value of a digit in the second position, therefore, is equal to the value of the digit times 10. The weight of the third position is 10^2. The value of a digit in the third position is equal to the value of the digit times 100 (see Table B.1).

Table B.1 *Decimal weights*

Position	Fifth	Fourth	Third	Second	First
Weight	10^4 (10,000)	10^3 (1000)	10^2 (100)	10^1 (10)	10^0 (1)

The value of the number as a whole is the sum of each digit times its weight. Figure B.2 shows the weightings of the decimal number 4567.

Figure B.2 *Example of a decimal number*

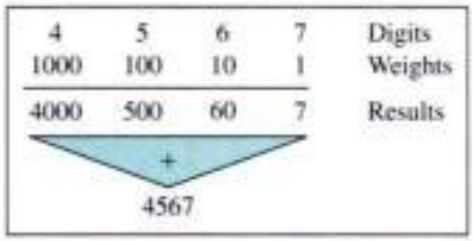

Binary Numbers

The binary number system provides the basis for all computer operations. Computers work by manipulating electric current on and off. The binary system uses two symbols, *0* and *1*, so it corresponds naturally to a two-state device, such as a switch, with 0 to represent the off state and 1 to represent the on state. Also called *base 2*, the word *binary* derives from the Latin stem *bi*, meaning 2.

Binary numbers use two symbols: 0 and 1.

Copyrighted material

Table B.3 *Octal weights*

Position	Fifth	Fourth	Third	Second	First
Weight	8^4 (4096)	8^3 (512)	8^2 (64)	8^1 (8)	8^0 (1)

To calculate the value of an octal number, multiply the value of each digit by the weight of its position, then add the results. Figure B.4 shows the weighting for the octal number 3471. As you can see, 3471 is the octal equivalent of decimal 1849.

Figure B.4 *Example of an octal number*

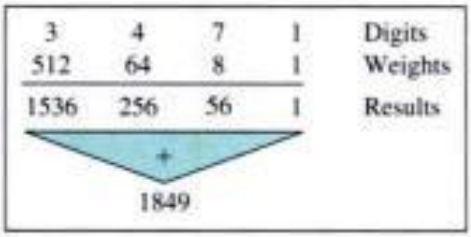

Hexadecimal Numbers

The term *hexadecimal* is derived from the Greek stem *hexadeca,* meaning 16 (*hex* means 6, and *deca* means 10). So the hexadecimal number system is *base 16.* Sixteen is also a power of 2 (2^4). Like octal, therefore, the hexadecimal system is used by programmers to represent binary numbers in a compact form. Hexadecimal uses 16 symbols to represent data: 0, 1, 2, 3, 4, 5, 6, 7, 8, 9, A, B, C, D, E, and F.

Hexadecimal numbers use 16 symbols: 0, 1, 2, 3, 4, 5, 6, 7, 8, 9, A, B, C, D, E, and F.

Weight and Value

Like the others, the hexadecimal system is a weighted system. Each digit has a weight based on its position in the number. The weight is used to calculate the value represented by the digit. Weight in hexadecimal is 16 raised to the power represented by a position, as shown in Table B.4. Once again, the value represented by each weighting is given in decimal terms next to the weight itself. The value of a specific digit is equal to its face value times the weight of its position. For example, a 4 in the third position has the equivalent decimal value 4×256, or 1024. To calculate the value of a hexadecimal number, multiply the value of each digit by the weight of its position, then add the results.

Table B.4 *Hexadecimal weights*

Position	Fifth	Fourth	Third	Second	First
Weight	16^4 (65,536)	16^3 (4096)	16^2 (256)	16^1 (16)	16^0 (1)

Copyrighted material

APPENDIX I

RFCs

There are approximately 2500 RFCs. In Table I.1 we list alphabetically, by protocol, those that are directly related to the material in this text. The main RFCs for each protocol are in boldface. For a complete listing, go to http://www.faqs.org/rfcs.

Table I.1 *RFCs for each protocol*

Protocol	*RFC*
ARP and RARP	**826, 903,** 925, 1027, 1293, 1329, 1433
BGP	1092, 1105, 1163, 1265, 1266, 1267, 1364, 1392, 1403, 1565, 1654, 1655, 1665, 1745, 1997, 2238, 2439
BOOTP and DHCP	**951,** 1048, 1084, 1395, 1497, 1531, 1532, 1533, 1534, 1541, 1542, 2131, 2132
DHCP	See BOOTP and DHCP
DNS	799, 811, 819, 830, 881, 882, 883, 897, 920, 921, **1034, 1035,** 1386, 1480, 1535, 1536, 1537, 1591, 1637, 1664, 1706, 1712, 1713, 1995, 2317
FTP	114, 133, 141, 163, 171, 172, 238, 242, 250, 256, 264, 269, 281, 291, 354, 385, 412, 414, 418, 430, 438, 448, 463, 468, 478, 486, 505, 506, 542, 553, 624, 630, 640, 691, 765, 913, **959,** 1635, 2460, 2577
HTML	1866
HTTP	**2068,** 2109
ICMP	777, **792,** 1016, 1018, 1256, 1788, 1885, 2521
IGMP	988, 1054, 1112, 2236
IP	760, 781, **791,** 815, 950, 919, 922, 1025, 1063, 1141, 1190, 1191, 1624, 2113
IPv6	1365, 1550, 1678, 1680, 1682, 1683, 1686, 1688, 1726, 1752, 1826, 1883, 1884, 2133, 2147, 2492, 2553, 2590, 2675
MIME	See SNMP, MIME, SMI
OSPF	1131, 1245, 1246, 1247, 1370, 1583, 1584, 1585, 1586, 1587, 2178, 2328, 2329, 2370
PIM	2362

Copyrighted material

wireless communication Data transmission using unguided media.

wireless LAN A LAN which uses unguided media.

World Wide Web (WWW) A multimedia Internet service that allows users to traverse the Internet by moving from one document to another via links that connect them together.

X

X.25 An ITU-T standard that defines the interface between a data terminal device and a packet-switching network.

X.509 An ITU-T standard for public key infrastructure (PKI).

Z

zone In DNS, what a server is responsible for or has authority over.

Copyrighted material

Index

Numerics

1000Base-CX, 352
1000Base-LX, 352
1000Base-SX, 352
1000Base-T, 352, 353
1000Base-X, 351–353
100Base-FX, 347–348
100Base-T4, 347, 349–350
100Base-TX, 347–348
100Base-X, 346
10Base2, 340
10Base5, 339
10Base-FL, 341
10Base-T, 340
  full-duplex, 343
16-QAM, 125
1-persistent, 315
2B1Q, 94
  HDSL, 222
2-PSK, 122
3-slot frame, 377
4B/5B, 97, 349
4-dimensional, 5 level pulse amplitude modulation; *see* 4D-PAM5
4D-PAM5, 353
4-PSK, 123
4-QAM, 125
56K modem, 131
  ADSL, 219
800 service, 209
802.11, 370
8B/10B, 97, 353
8B/6T, 98
8B/6T code, 890
8-PSK, 123
8-QAM, 125
900 service, 209

A

AAL, 455
AAL1, 456
  CS, 456
AAL2, 457
  CS layer fields, 457
AAL3/4, 457
AAL5, 459
ABM, 281
AC value, 777
access control, 33
access method, 239, 334
access point; *see* AP
access rate, 655
  T-1, 655
ACK, 268, 873
  in poll, 319
  Stop-and-Wait ARQ, 269
ACK frame, 270
ACK message, 792
ACK segment, 610, 611
acknowledgment, 440, 620
  ALOHA, 313
  flow control, 240, 267
  Go-Back-N, 275
acknowledgment number, 598, 606, 607
acknowledgment policy, 638
ACL, 377
active close, 673
active document, 747, 748
active open, 673
additive increase, 640, 641
address
  MAC, 240
  need for multiple, 514
  network, 484
  physical, 240
address format, 668
address mask messages, 528
Address Resolution Protocol; *see* ARP
address to name resolution, 695
addressing
  data link layer, 240
  Ethernet, 336
  transport layer, 591
  VPN, 867
admission control, 649
admission policy, 638
ADSL, 219, 223
  actual bit rate, 221
  adaptive, 220
  DMT, 221
  HDSL, 222
  local loop, 219
  VDSL, 223
ADSL modem, 221
Advanced Mobile Phone System; *see* AMPS
Advanced Research Projects Agency; *see* ARPA
AF PHB, 654
AH protocol, 855, 856, 857
AL field, 458
ALOHA, 312
alternate mark inversion; *see* AMI
AM, 133, 134, 135, 136
AM bandwidth, 134, 135
AM radio, 155
AM station, 134
American National Standards Institute; *see* ANSI
American Standard Code for Information Interchange; *see* ASCII
AMI, 93, 94, 222

Copyrighted material

amplifier, 388
  attenuation, 70
  cable TV, 223
amplitude, 115, 118
  ASK, 117
  FM, 136
  FSK, 120
  measurement, 51
  PM, 138
  PSK, 122
  QAM, 125
  sine wave, 54
amplitude modulation; *see* AM
amplitude shift keying; *see* ASK
AMPS, 412
analog bandwidth, 65
analog data, 49
analog hierarchy
  telephone system, 153
analog leased service, 153, 209
analog service, 208
analog signal, 49, 50, 115
  vs. digital, 66
analog switched service, 208
analog to analog conversion, 133
analog to digital conversion, 98
analog transmission
  T-line, 163
AND operation, 489
angle of incidence, 179
anonymous FTP, 724
ANSI, 5, 19, 20
antenna
  focus, 188
  horn, 188
  line of sight, 185
  parabolic dish, 188
  satellite, 421
anycast address, 531
AP, 361, 370
aperiodic signal, 50
applet, 749
application adaptation layer; *see* AAL
application layer, 39, 667, 888
  directory services, 889
  file manipulation, 39, 888
  Internet model, 889
  mail services, 39, 888
  NVT, 888
  PGP, 860
  remote login, 39
  responsibilities, 888
  security, 853
  services, 888
  transport layer, 589
  web access, 39
application program, 671
area, 549
area border router, 549
ARP, 514, 515
  broadcast query, 515
  encapsulation, 517
  four cases, 517
  hardware length field, 516
  hardware type field, 516
  host to host on different networks, 518
  host to host on single network, 518
  IP to physical address mapping, 515
  operation, 517
  operation field, 516
  packet components, 515
  packet format, 516
  protocol length field, 516
  protocol type field, 516
  query packet, 515
  response packet, 515
  response packet components, 515
  router to host on different networks, 518
  router to host on same network, 518
  sender hardware address field, 516
  sender protocol address field, 516
  steps involved, 517
  target hardware address field, 516
  target protocol address field, 516
  unicast response, 515
ARPA, 16
ARPANET, 16
ARQ, 268
  bandwidth-delay product, 280
AS, 843, 844
ASCII, 5, 873
  extended, 5
  table, 873
ASCII code, 243
ASK, 115, 117, 120
  bandwidth, 118
  bandwidth example, 119
  bandwidth formula, 118
  bit, baud rate example, 119
  carrier signal, 117
  concept, 118
  noise, 118
  with PSK, 125
  QAM, 126
ASN.1, 842
asymmetrical DSL; *see* ADSL
asynchronous balanced mode; *see* ABM
asynchronous connectionless link; *see* ACL
asynchronous TDM
  ATM, 448
asynchronous transmission, 103, 105, 106
Asynchronous Transmission Mode; *see* ATM
AT&T Bell System, 210
AT&T divestiture, 210
ATM, 446, 449, 451
  AAL1, 456
  AAL2, 457
  AAL3/4, 457
  AAL5, 459
  architecture, 449
  asynchronous TDM, 448
  ATM layer, 454
  available bit rate class, 658
  backward compatibility, 446
  cell, 452
  cell delay variation, 659
  cell error ratio, 659
  cell loss ratio, 659
  cell transfer delay, 659
  cell variation delay tolerance, 659
  connection establishment, 452
  connection release, 452
  connection types, 903
  connection-oriented, 906
  connections, 452
  constant-bit-rate class, 657
  design goals, 446
  example, 449
  header for NNI, 454
  hierarchical routing, 451
  Identifier, 450
  Information Super-Highway, 446
  layers, 453
  minimum cell rate, 659
  multimedia, 903
  multiplexing, 448
  network-related attributes, 659
  peak cell rate, 658
  physical layer, 454
  QoS, 657
  SONET, 453
  sustained cell rate, 658
  SVC, 452
  switching, 452
  switching fabric, 452
  unspecified bit rate class, 658
  user-related attributes, 658
  variable-bit-rate class, 657
  variable-bit-rate non-real time, 657, 658
  variable-bit-rate real-time, 657
  virtual connection, 449
  WAN, 903

Copyrighted material

RG, 178
  coaxial cable, 178
  ratings, 178
ring, 10, 12
  advantages, 13
  definition, 12
  disadvantages, 13
  dual, 13
  repeater, 12
RIP, 545, 546, 602
  encapsulation, 548
  path vector routing, 558
  port, 917
  updating algorithm, 546
RJ45, 176
RNR, 285
roaming, 411
root port, 393
root server, 690
rotary dialing, 208
round trip time; *see* RTT
router, 35, 543
  address, 528
  area border, 549
  autonomous system boundary, 548
  backbone, 549
  components, 899
  designated parent, 571
  fragmentation, 469, 523
  input port, 899
  multicast, 563
  output port, 900
  structure, 899
  subnet, 488
  switching fabric, 901
router solicitation and advertisement message, 528
routing
  default, 499
  distance vector, 546
  distance vector vs. link state, 550
  dynamic, 499
  host specific, 499
  interior and exterior, 544
  link state, 550
  network layer, 35
  network specific, 498
  next hop, 497
  static, 499
  subnet, 488
routing information protocol; *see* RIP
routing processor, 899, 900
routing protocol, 469, 543
routing table, 497, 543, 556
  dynamic, 500, 543
  entries, 546
  intialization, 548
  link state routing, 550
  next hop field, 548
  shortest path tree, 556
  static, 500, 543
  updating of, 527, 548
routing techniques, 497
RPB, 571
RPC, 917
RPF, 570
RPM, 572
RR, 285
RSA encryption, 821, 822
Rspec, 649
RSVP, 649, 650
  IntServ, 650
  message, 651
  reservation merging, 652
  reservation style, 652
RTCP, 789
RTP, 789
RTT, 622
  as function of previous RTTs, 623
  calculation, 622
  Karn's algorithm, 623
run-length encoding, 722
RZ, 90, 91, 92

S

SA, 335, 668
sample and hold, 99
sampling, 98, 99
  PAM, 99
sampling rate, 101, 774
  Nyquist theorem, 101
  PAM, 101
  PCM, 101
SAR, 456
satellite, 420
  frequency band, 423
  geosynchronous, 423
  trunk, 205
satellite communication, 420
satellite network, 420
satellite orbit, 420
satellite period, 421
S-Box, 814
scalability, 653
scatternet, 373
scheduling, 644
  FIFO queue, 645
  priority queue, 645
  weighted fair queueing, 645
SCO, 377
SDSL, 222
SEAL, 459
secondary
  in polling, 319
secondary server, 690
secondary station, 318
secret key, 838
  PGP, 860
secret-key encryption
  key, 809
Secure Sockets Layer (SSL), 858
security, 8
  application layer, 853
  authentication, 829
  integrity, 829
  network layer, 853
  transport layer, 853
Security Association (SA), 854
security parameter index (SPI), 854; *see also* SPI
segment, 37, 342, 388, 605, 608
  format, 608
  header fields, 608
  size, 608
  TCP, 608
segment type, 458
segmentation
  L2CAP, 379
segmentation and reassembly; *see* SAR
select
  addressing, 318
  frame, 318
  polling, 318
selecting, 318
Selective Reject; *see* SREJ
Selective Repeat, 638
  bidirectional, 280
  operation, 278
  receiver window size, 278
  sender window size, 278
  window size, 279
Selective Repeat ARQ, 273
self-synchronization, 88
semantics, 18
sender, 4, 642
  flow control, 267
sender buffer
  TCP, 615
sender window, 616
  closing, 617
  expansion, 617
  shrinking, 617
  sliding, 616
  TCP, 616
sequence number, 273, 456, 458, 598, 599, 606, 607, 787
sequence number protection, 456

Copyrighted material

Data Communications and Networking third edition

continues in the Forouzan tradition of providing accessible, comprehensive and up-to-date coverage of networking technologies. His student-friendly approach utilizes hundreds of diagrams, and minimizes the use of math.

Forouzan's excellent pedagogy includes worked examples, applications from everyday life, and numerous practice problems.

In this revision, Forouzan has taken even greater care to make sure that the fundamental concepts of networking are well explained. Additionally, the material in the new edition has been reorganized according to the five-layer Internet model, and the topics have been thoroughly revised to incorporate the latest topics in the field of networking.

Time after time, I have asked students what they thought of this book, and an overwhelming majority like the book and find it easy to follow.

Christophe Veltsos, Minnesota State University, Mankato.

The new and expanded coverage includes:

- Wireless LANs and Bluetooth coverage
- Expanded coverage on satellites and cellular telephones
- More on high-speed access to the Internet
  - DSL
  - Cable TV
  - SONET
- More depth on multiple and point-to-point access protocols
- Additional IP and Ipv6 coverage
- Expanded material on UDP and TCP
- New part (4 chapters) on security issues in networking
- Enhanced wireless coverage

www.mhhe.com/forouzan The Online Learning Center (OLC) for this book provides resources for students and instructors. It contains PowerPoint slides, solutions, quizzing, and animated figures.

McGraw Hill Higher Education

The McGraw-Hill Companies

P/N 0-07-251584-8
PART OF
ISBN 0-07-292354-7
90000
9 780072 923544
www.mhhe.com

Copyrighted material