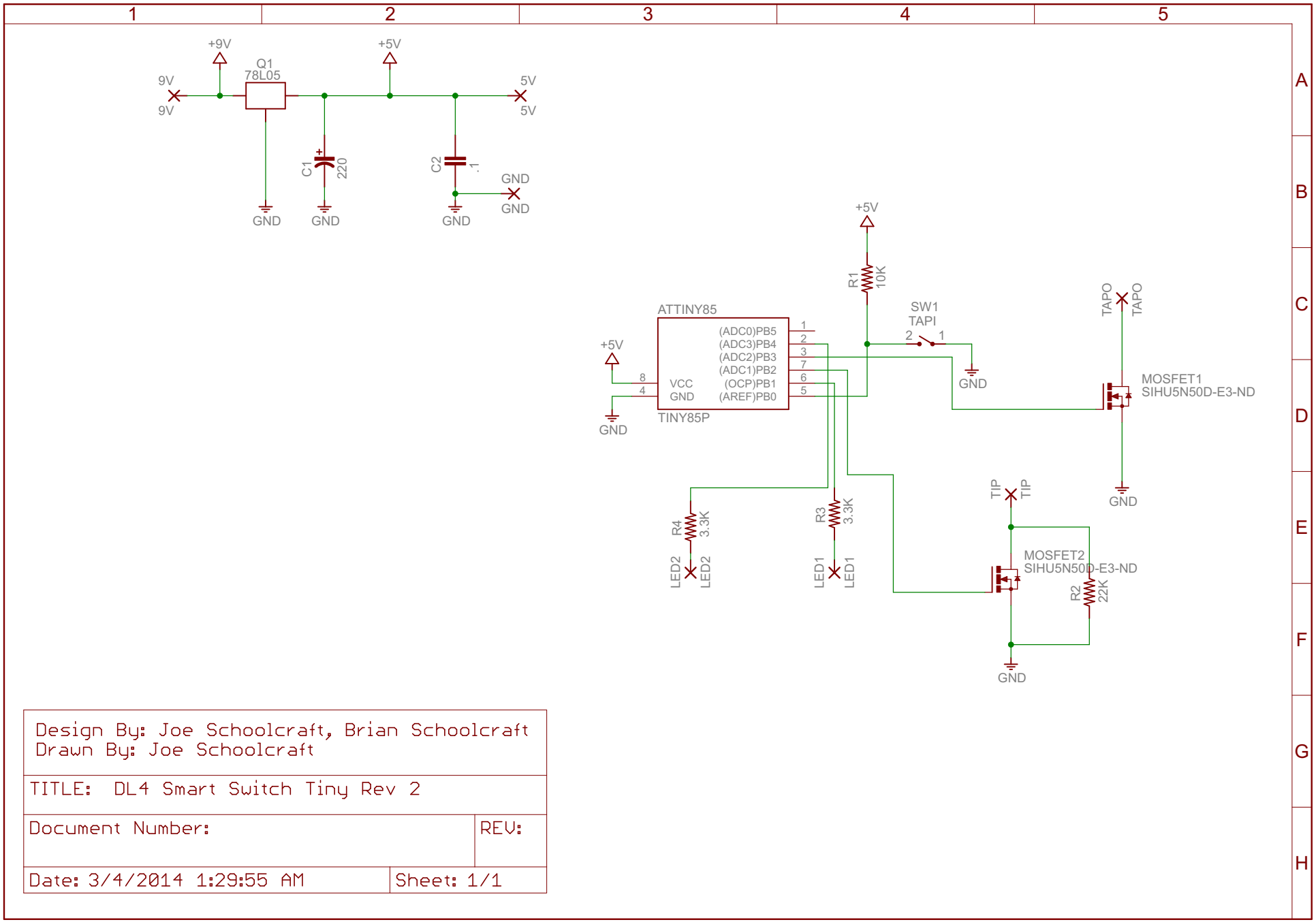

Design By: Joe Schoolcraft, Brian Schoolcraft Drawn By: Joe Schoolcraft	
TITLE: DL4 Smart Switch Tiny Rev 2	
Document Number:	REV:
Date: 3/4/2014 1:29:55 AM	Sheet: 1/1