Polarity and transient protection

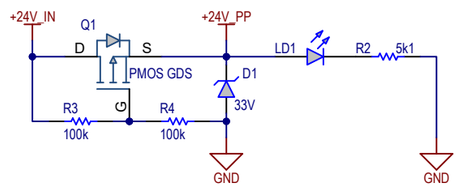

2.048V Ref

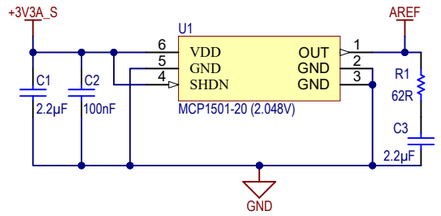

Supply energy monitoring

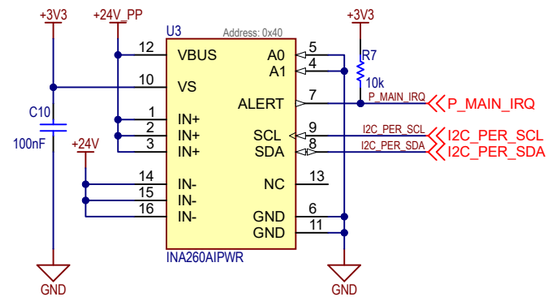

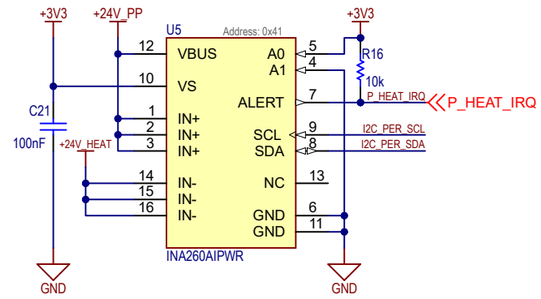

+20V Aalogue output supply

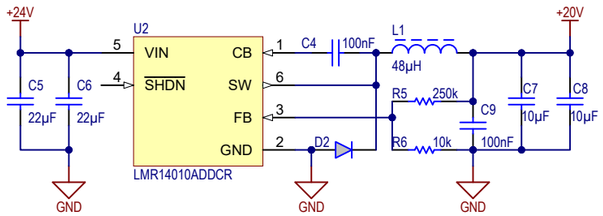

Supply feedback voltage dividers

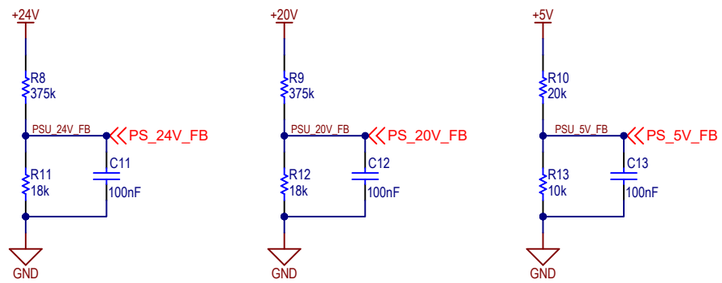

+5V Main supply

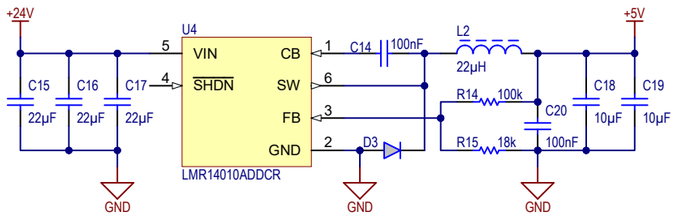

+3.3V Main supply

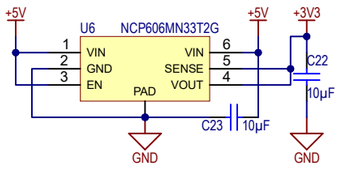

+3.3V Analogue supply

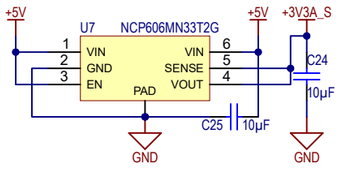

+3.3V Eth Analogue supply

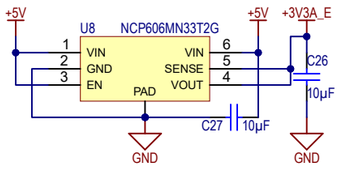

Fused supplies

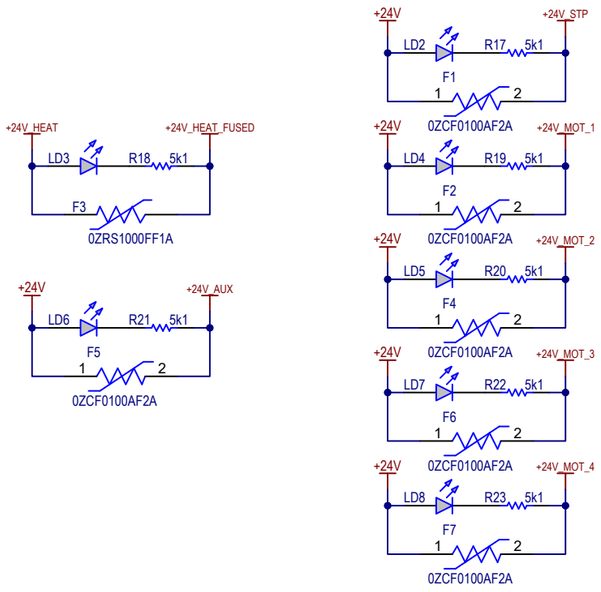

Title	***ORC - Power Supplies***		Scion 49 Sala St Whakarewarewa Rotorua New Zealand 3010
Size: A3	Number: 0-2	Revision: 2	
Date: 19/05/2025	Time: 11:25:09 AM	Sheet 1 of 5	
File: D:\Documents\Documents\Altium\Projects\Open Reactor Control System\Open Reactor Control System - Power Suppli			

Spare IO breakout

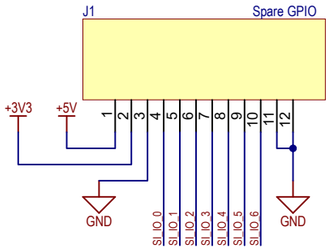

Ethernet interface

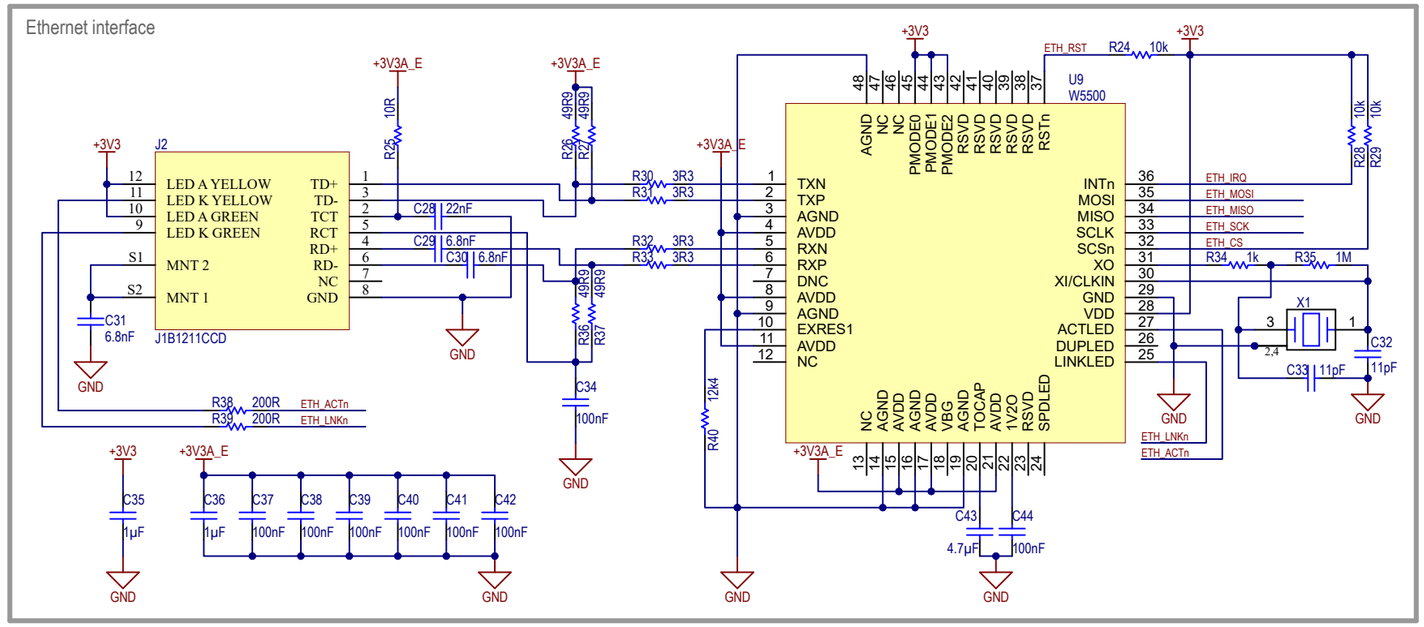

System Interface Microcontroller

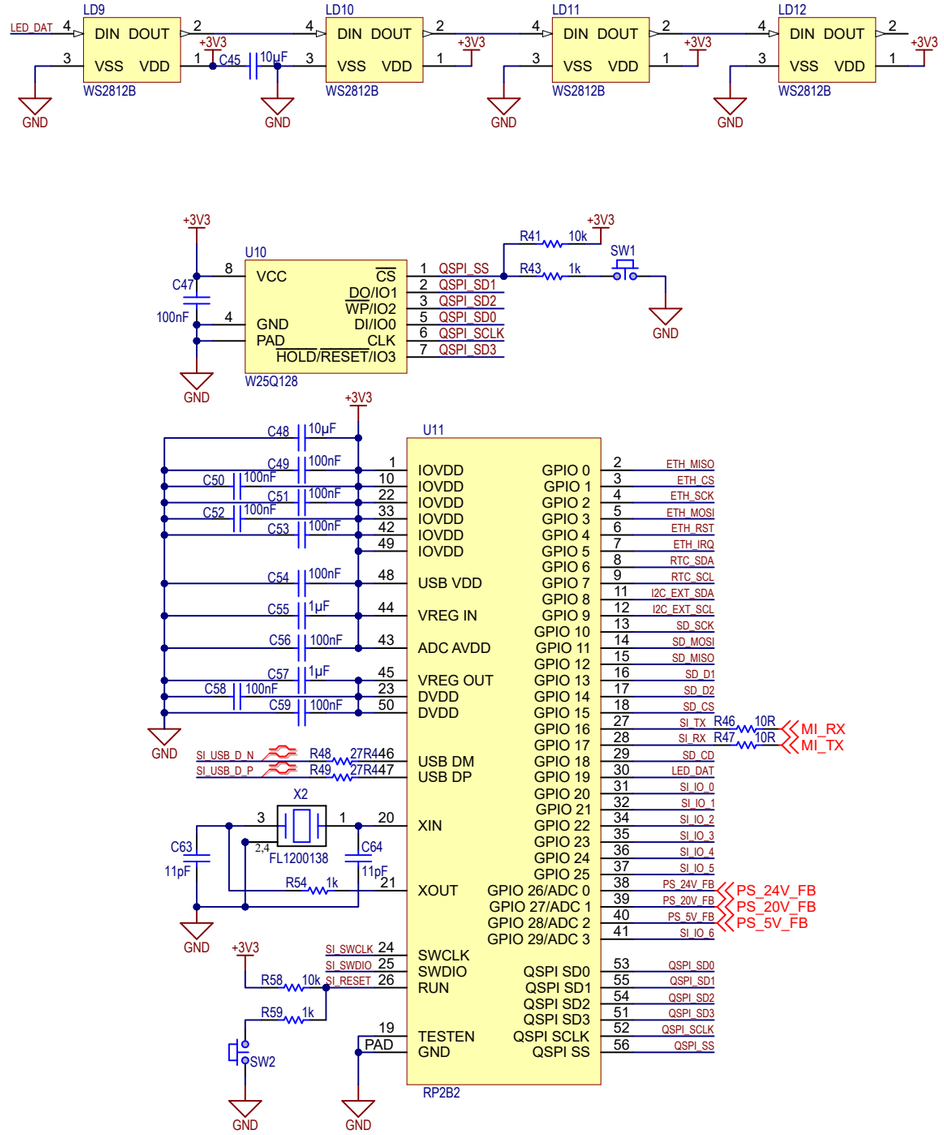

SD card connector

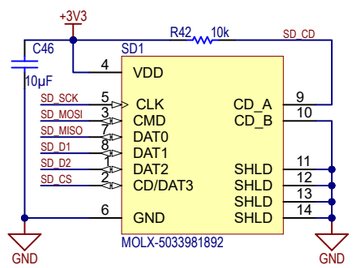

USB interface

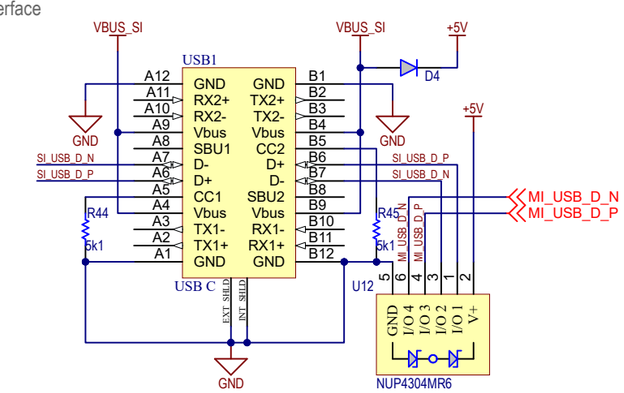

Real Time Clock

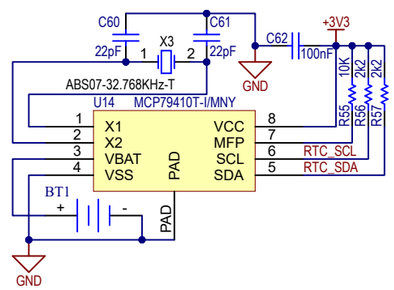

I2C isolated external interface

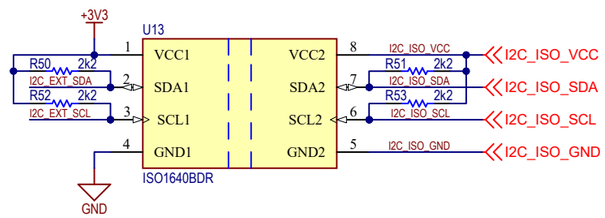

Title	ORC - System Interface MCU		Scion 49 Sala St Whakarewarewa Rotorua New Zealand 3010
Size: A3	Number: 0-3	Revision: 2	
Date: 19/05/2025	Time: 11:25:09 AM	Sheet 2 of 5	
File: D:\Documents\Documents\Altium\Projects\Open Reactor Control System\Open Reactor Control System - System Interf			

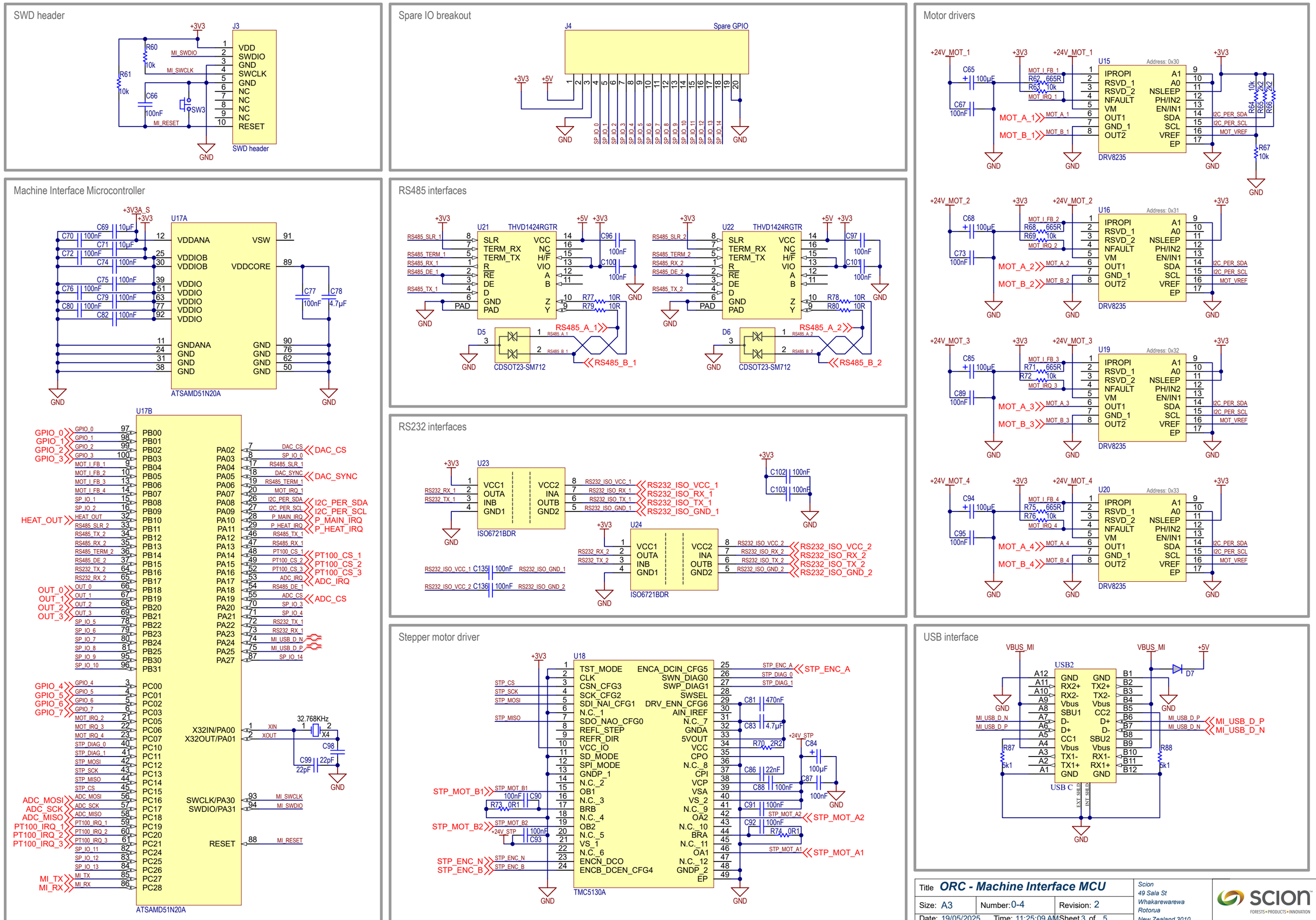
SWD header
J3
VDD
SWDIO
GND
SWCLK
GND
NC
NC
NC
NC
RESET
SWD header
MI_SWDIO
MI_SWCLK
MI_RESET
R60 10k
R61 10k
C66 100nF
SW3
Spare IO breakout
J4
Spare GPIO
Machine Interface Microcontroller
U17A
ATSAMD51N20A
U17B
ATSAMD51N20A
Motor drivers
U15
U16
U19
U20
DRV8235
Address: 0x30
Address: 0x31
Address: 0x32
Address: 0x33
RS485 interfaces
U21
U22
THVD1424RGTR
CDSOT23-SM712
RS485_A_1
RS485_B_1
RS485_A_2
RS485_B_2
RS232 interfaces
U23
U24
ISO6721BDR
Stepper motor driver
U18
TMC5130A
STP_ENC_A
STP_MOT_A2
STP_MOT_A1
STP_MOT_B1
STP_MOT_B2
STP_ENC_N
STP_ENC_B
USB interface
USB2
USB C
MI_USB_D_P
MI_USB_D_N
Title ORC - Machine Interface MCU
Size: A3
Number: 0-4
Revision: 2
Date: 19/05/2025
Time: 11:25:09 AM
Sheet 3 of 5
File: D:\Documents\Documents\Altium\Projects\Open Reactor Control System\Open Reactor Control System - Machine Inter
Scion
49 Sala St
Whakarewarewa
Rotorua
New Zealand 3010
scion
FORESTS • PRODUCTS • INNOVATION

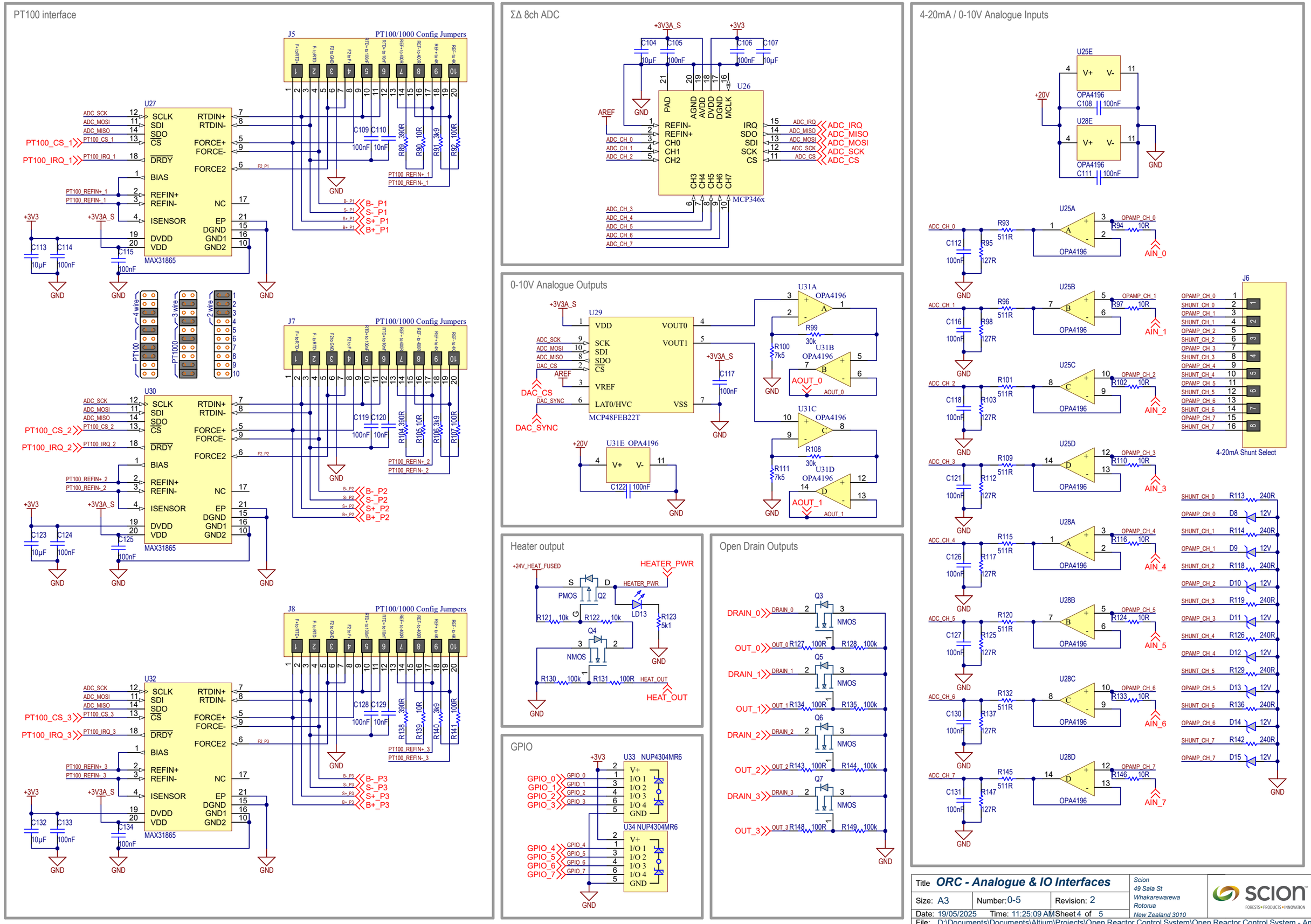
PT100 interface
J5
PT100/1000 Config Jumpers
U27
MAX31865
PT100_CS_1
PT100_IRQ_1
B-_P1
S-_P1
S+_P1
B+_P1
J7
U30
PT100_CS_2
PT100_IRQ_2
B-_P2
S-_P2
S+_P2
B+_P2
J8
U32
PT100_CS_3
PT100_IRQ_3
B-_P3
S-_P3
S+_P3
B+_P3
PT100
PT1000
4 wire
3 wire
2 wire
ΣΔ 8ch ADC
U26
MCP346x
AREF
ADC_IRQ
ADC_MISO
ADC_MOSI
ADC_SCK
ADC_CS
0-10V Analogue Outputs
U29
MCP48FEB22T
DAC_CS
DAC_SYNC
U31A
U31B
U31C
U31D
U31E OPA4196
AOUT_0
AOUT_1
Heater output
HEATER_PWR
HEAT_OUT
Open Drain Outputs
DRAIN_0
OUT_0
DRAIN_1
OUT_1
DRAIN_2
OUT_2
DRAIN_3
OUT_3
GPIO
U33 NUP4304MR6
U34 NUP4304MR6
4-20mA / 0-10V Analogue Inputs
U25E
U28E
OPA4196
U25A
U25B
U25C
U25D
U28A
U28B
U28C
U28D
AIN_0
AIN_1
AIN_2
AIN_3
AIN_4
AIN_5
AIN_6
AIN_7
J6
4-20mA Shunt Select
Title ORC - Analogue & IO Interfaces
Size: A3
Number: 0-5
Revision: 2
Date: 19/05/2025
Time: 11:25:09 AM
Sheet 4 of 5
File: D:\Documents\Documents\Altium\Projects\Open Reactor Control System\Open Reactor Control System - Analogue & IO
Scion
49 Sala St
Whakarewarewa
Rotorua
New Zealand 3010
scion
FORESTS • PRODUCTS • INNOVATION

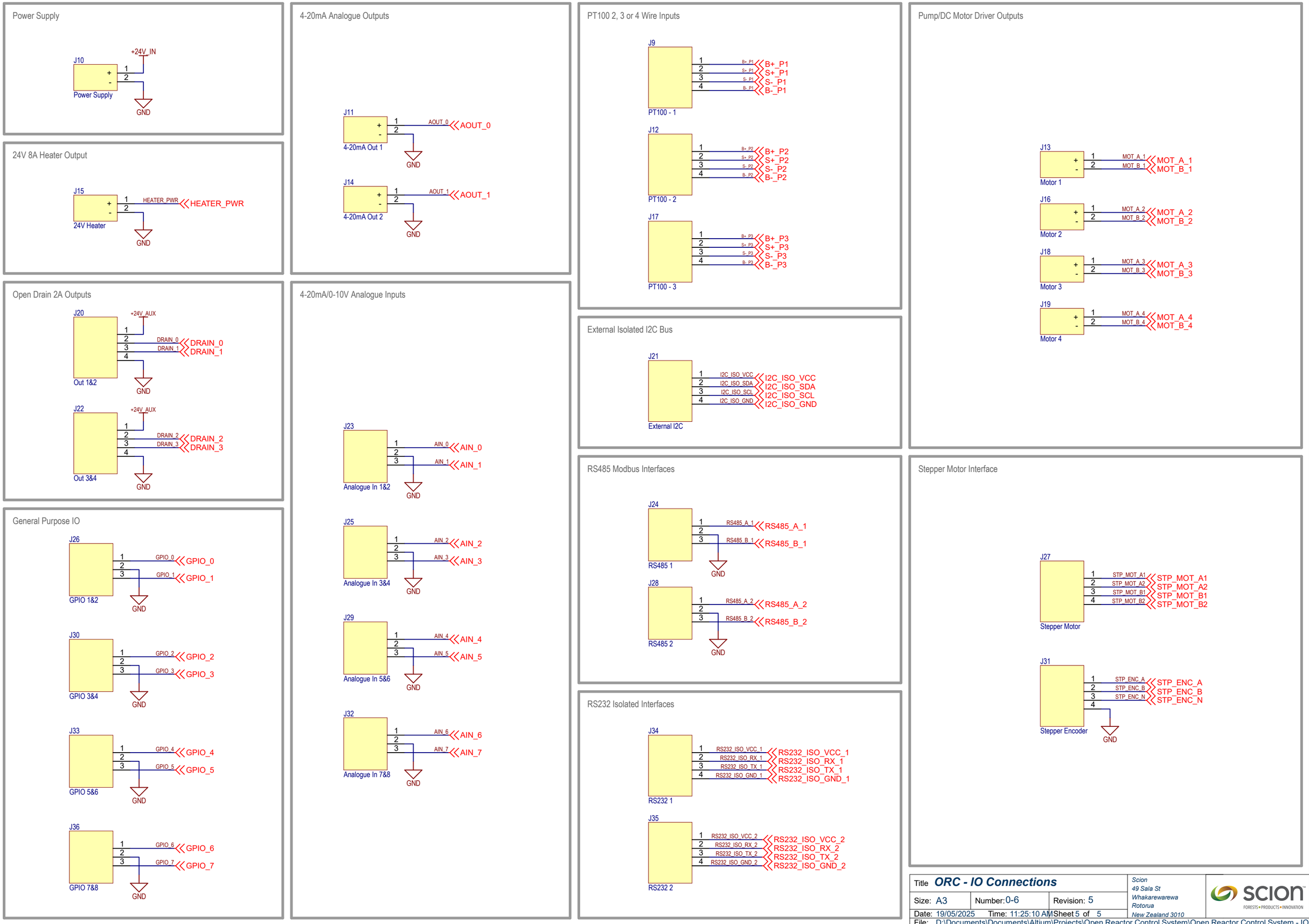
Power Supply
J10
+24V_IN
Power Supply
GND
24V 8A Heater Output
J15
HEATER_PWR
HEATER_PWR
24V Heater
GND
Open Drain 2A Outputs
J20
+24V_AUX
DRAIN_0
DRAIN_1
DRAIN_0
DRAIN_1
Out 1&2
GND
J22
+24V_AUX
DRAIN_2
DRAIN_3
DRAIN_2
DRAIN_3
Out 3&4
GND
General Purpose IO
J26
GPIO_0
GPIO_1
GPIO_0
GPIO_1
GPIO 1&2
GND
J30
GPIO_2
GPIO_3
GPIO_2
GPIO_3
GPIO 3&4
GND
J33
GPIO_4
GPIO_5
GPIO_4
GPIO_5
GPIO 5&6
GND
J36
GPIO_6
GPIO_7
GPIO_6
GPIO_7
GPIO 7&8
GND
4-20mA Analogue Outputs
J11
AOUT_0
AOUT_0
4-20mA Out 1
GND
J14
AOUT_1
AOUT_1
4-20mA Out 2
GND
4-20mA/0-10V Analogue Inputs
J23
AIN_0
AIN_1
AIN_0
AIN_1
Analogue In 1&2
GND
J25
AIN_2
AIN_3
AIN_2
AIN_3
Analogue In 3&4
GND
J29
AIN_4
AIN_5
AIN_4
AIN_5
Analogue In 5&6
GND
J32
AIN_6
AIN_7
AIN_6
AIN_7
Analogue In 7&8
GND
PT100 2, 3 or 4 Wire Inputs
J9
B+_P1
S+_P1
S-_P1
B-_P1
B+_P1
S+_P1
S-_P1
B-_P1
PT100 - 1
J12
B+_P2
S+_P2
S-_P2
B-_P2
B+_P2
S+_P2
S-_P2
B-_P2
PT100 - 2
J17
B+_P3
S+_P3
S-_P3
B-_P3
B+_P3
S+_P3
S-_P3
B-_P3
PT100 - 3
External Isolated I2C Bus
J21
I2C_ISO_VCC
I2C_ISO_SDA
I2C_ISO_SCL
I2C_ISO_GND
I2C_ISO_VCC
I2C_ISO_SDA
I2C_ISO_SCL
I2C_ISO_GND
External I2C
RS485 Modbus Interfaces
J24
RS485_A_1
RS485_B_1
RS485_A_1
RS485_B_1
RS485 1
GND
J28
RS485_A_2
RS485_B_2
RS485_A_2
RS485_B_2
RS485 2
GND
RS232 Isolated Interfaces
J34
RS232_ISO_VCC_1
RS232_ISO_RX_1
RS232_ISO_TX_1
RS232_ISO_GND_1
RS232_ISO_VCC_1
RS232_ISO_RX_1
RS232_ISO_TX_1
RS232_ISO_GND_1
RS232 1
J35
RS232_ISO_VCC_2
RS232_ISO_RX_2
RS232_ISO_TX_2
RS232_ISO_GND_2
RS232_ISO_VCC_2
RS232_ISO_RX_2
RS232_ISO_TX_2
RS232_ISO_GND_2
RS232 2
Pump/DC Motor Driver Outputs
J13
MOT_A_1
MOT_B_1
MOT_A_1
MOT_B_1
Motor 1
J16
MOT_A_2
MOT_B_2
MOT_A_2
MOT_B_2
Motor 2
J18
MOT_A_3
MOT_B_3
MOT_A_3
MOT_B_3
Motor 3
J19
MOT_A_4
MOT_B_4
MOT_A_4
MOT_B_4
Motor 4
Stepper Motor Interface
J27
STP_MOT_A1
STP_MOT_A2
STP_MOT_B1
STP_MOT_B2
STP_MOT_A1
STP_MOT_A2
STP_MOT_B1
STP_MOT_B2
Stepper Motor
J31
STP_ENC_A
STP_ENC_B
STP_ENC_N
STP_ENC_A
STP_ENC_B
STP_ENC_N
Stepper Encoder
GND
Title ORC - IO Connections
Size: A3
Number: 0-6
Revision: 5
Date: 19/05/2025
Time: 11:25:10 AM
Sheet 5 of 5
File: D:\Documents\Documents\Altium\Projects\Open Reactor Control System\Open Reactor Control System - IO Connectio
Scion
49 Sala St
Whakarewarewa
Rotorua
New Zealand 3010
SCION
FORESTS • PRODUCTS • INNOVATION