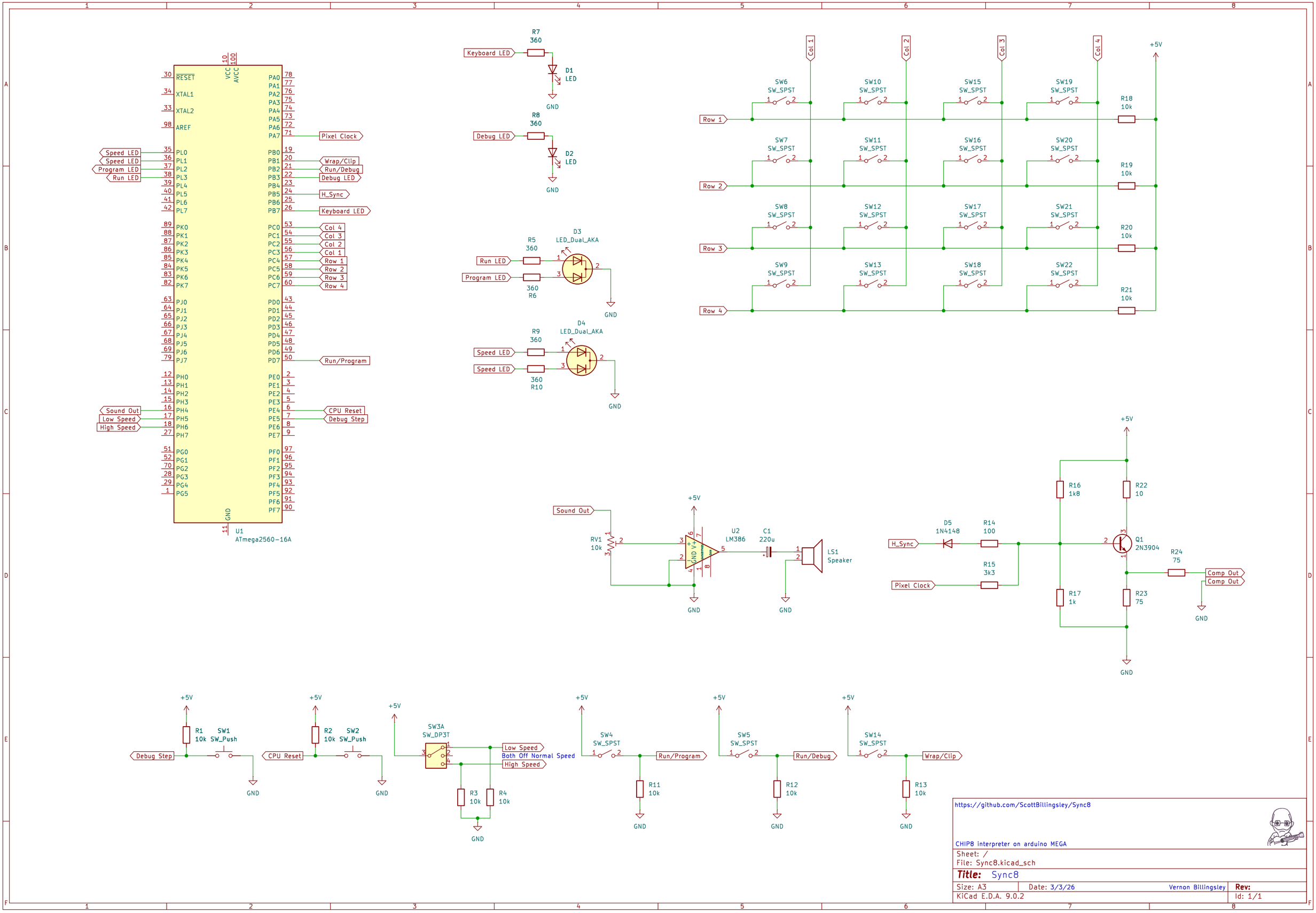
U1
ATmega2560-16A
RESET
XTAL1
XTAL2
AREF
VCC
AVCC
GND
PA0
PA1
PA2
PA3
PA4
PA5
PA6
PA7
PB0
PB1
PB2
PB3
PB4
PB5
PB6
PB7
PC0
PC1
PC2
PC3
PC4
PC5
PC6
PC7
PD0
PD1
PD2
PD3
PD4
PD5
PD6
PD7
PE0
PE1
PE2
PE3
PE4
PE5
PE6
PE7
PF0
PF1
PF2
PF3
PF4
PF5
PF6
PF7
PL0
PL1
PL2
PL3
PL4
PL5
PL6
PL7
PK0
PK1
PK2
PK3
PK4
PK5
PK6
PK7
PJ0
PJ1
PJ2
PJ3
PJ4
PJ5
PJ6
PJ7
PH0
PH1
PH2
PH3
PH4
PH5
PH6
PH7
PG0
PG1
PG2
PG3
PG4
PG5
Pixel Clock
Wrap/Clip
Run/Debug
Debug LED
H_Sync
Keyboard LED
Col 4
Col 3
Col 2
Col 1
Row 1
Row 2
Row 3
Row 4
Run/Program
CPU Reset
Debug Step
Speed LED
Program LED
Run LED
Sound Out
Low Speed
High Speed
R7
360
D1
LED
R8
360
D2
LED
R5
360
R6
360
D3
LED_Dual_AKA
R9
360
R10
360
D4
LED_Dual_AKA
SW6
SW7
SW8
SW9
SW10
SW11
SW12
SW13
SW15
SW16
SW17
SW18
SW19
SW20
SW21
SW22
SW_SPST
R18
R19
R20
R21
10k
+5V
RV1
10k
U2
LM386
C1
220u
LS1
Speaker
D5
1N4148
R14
100
R15
3k3
R16
1k8
R17
1k
R22
10
R23
75
R24
75
Q1
2N3904
Comp Out
R1
10k
SW1
SW_Push
R2
10k
SW2
SW_Push
SW3A
SW_DP3T
Both Off Normal Speed
R3
10k
R4
10k
SW4
SW_SPST
R11
10k
SW5
SW_SPST
R12
10k
SW14
SW_SPST
R13
10k
https://github.com/ScottBillingsley/Sync8
CHIP8 interpreter on arduino MEGA
Sheet: /
File: Sync8.kicad_sch
Title: Sync8
Size: A3
Date: 3/3/26
Vernon Billingsley
Rev:
KiCad E.D.A. 9.0.2
Id: 1/1