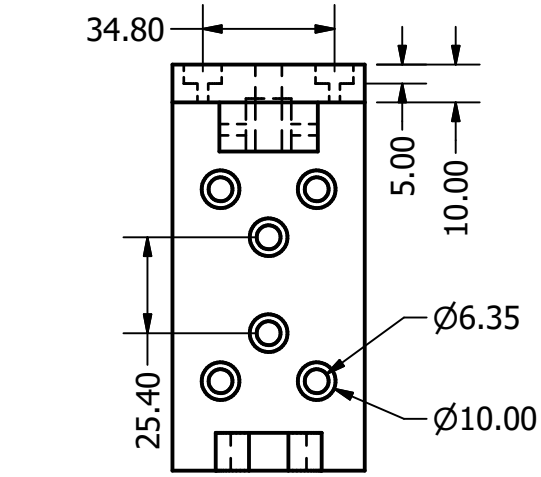

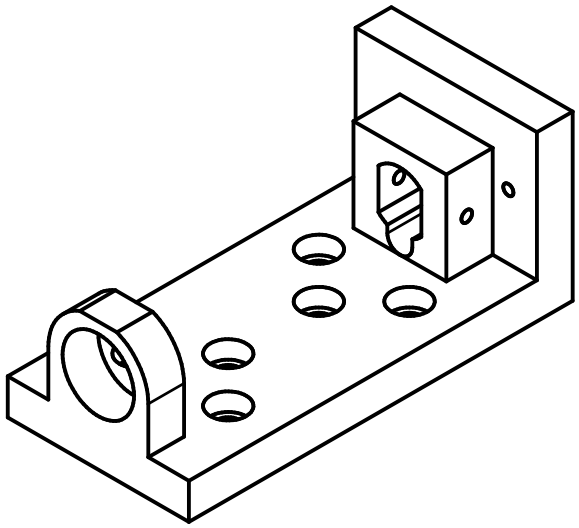

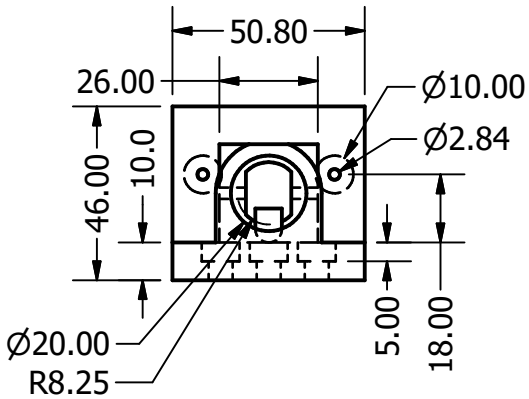

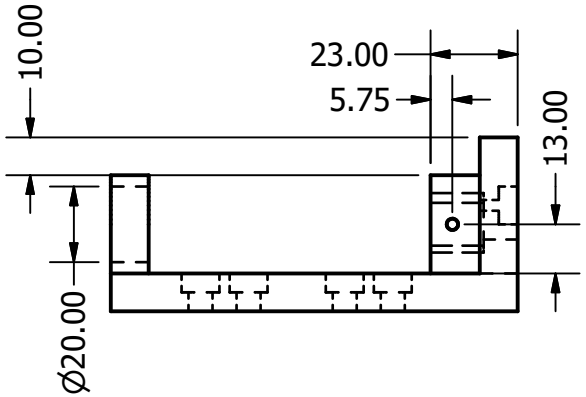

DRAWN Scott J. Bricker	10/15/2024	University of California - Davis
CHECKED		TITLE
QA		Actuator Mount
MFG		
APPROVED		
		SIZE A / DWG NO 2 / REV V1.0
		SCALE 1:2 / SHEET 1 OF 1