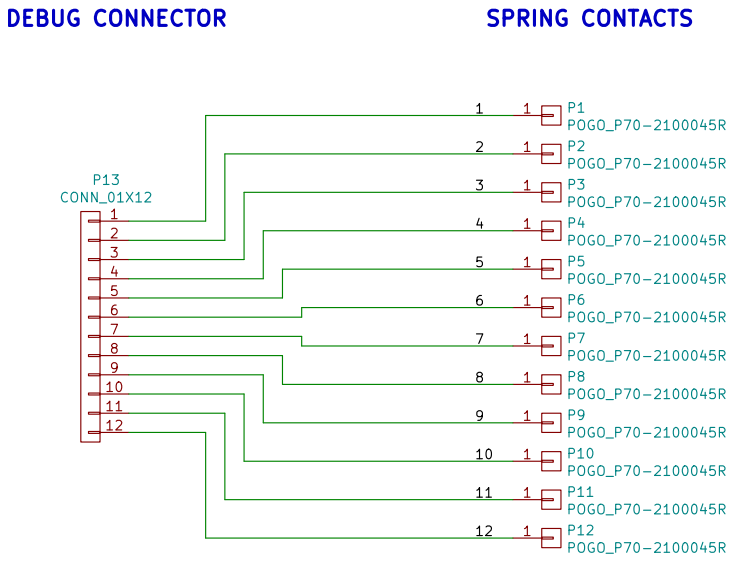

Scott Rapson

Sheet: /
File: springboard.sch

Title: G Mount Body Contact Jig

Size: A4	Date: 2021-03-07	**Rev: 1.0**
KiCad E.D.A. kicad 5.1.6		Id: 1/1