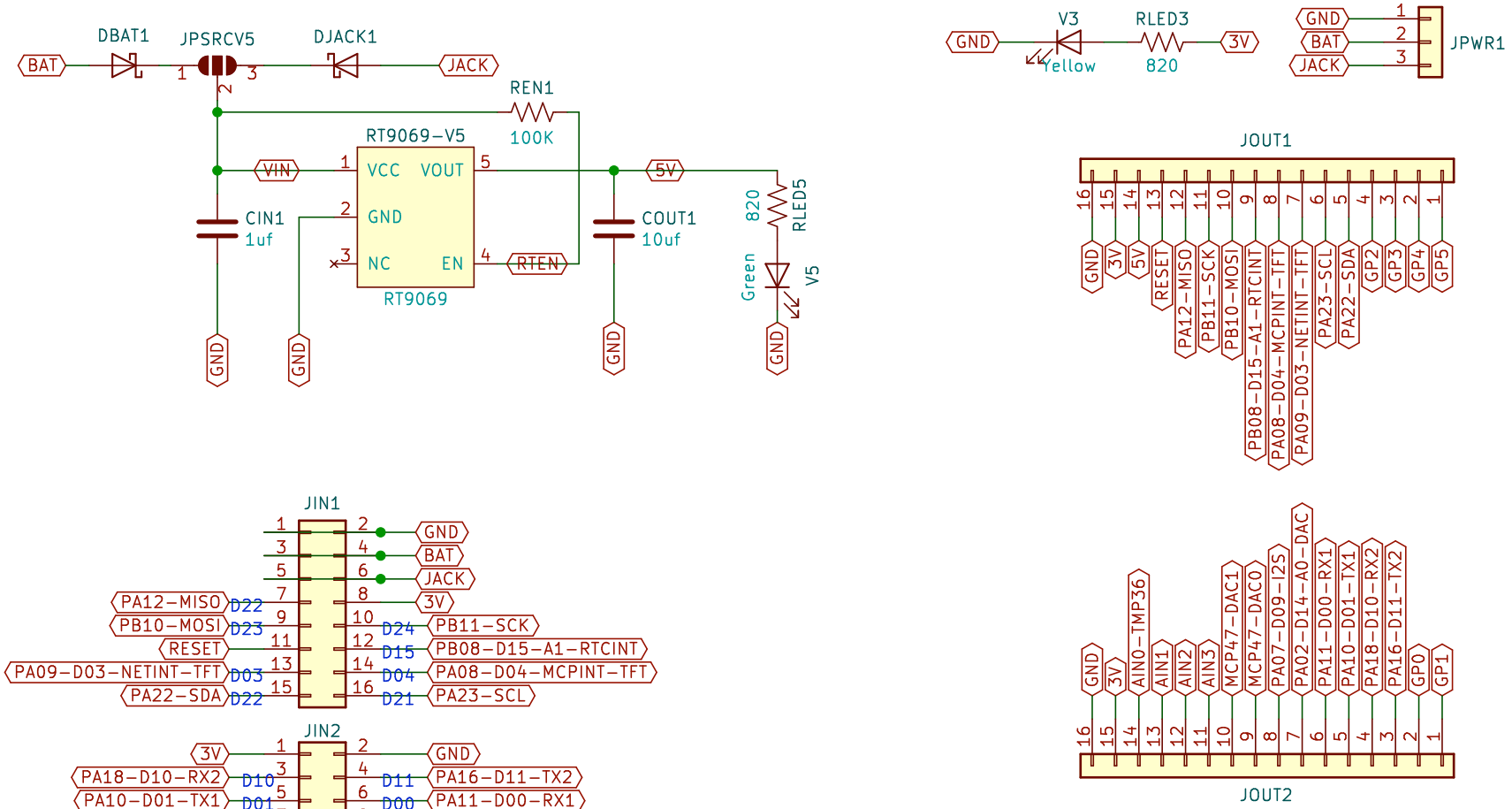

Copyright S. Cooper 2020.
You may redistribute and modify this documentation under the terms of the CERN OHL v.1.2.
This documentation is distributed WITHOUT ANY EXPRESS OR IMPLIED WARRANTY,
INCLUDING OF MERCHANTABILITY, SATISFACTORY QUALITY AND FITNESS FOR A PARTICULAR PURPOSE.
Please see the CERN OHL v.1.2 for applicable conditions. (http://ohwr.org/cernohl).

Sheet: /
File: tExpJackV01a.sch

Title: TExpJack

Size: User	Date: 2020-05-11	**Rev: 1g**
KiCad E.D.A. kicad (5.1.2-1)-1		Id: 1/1