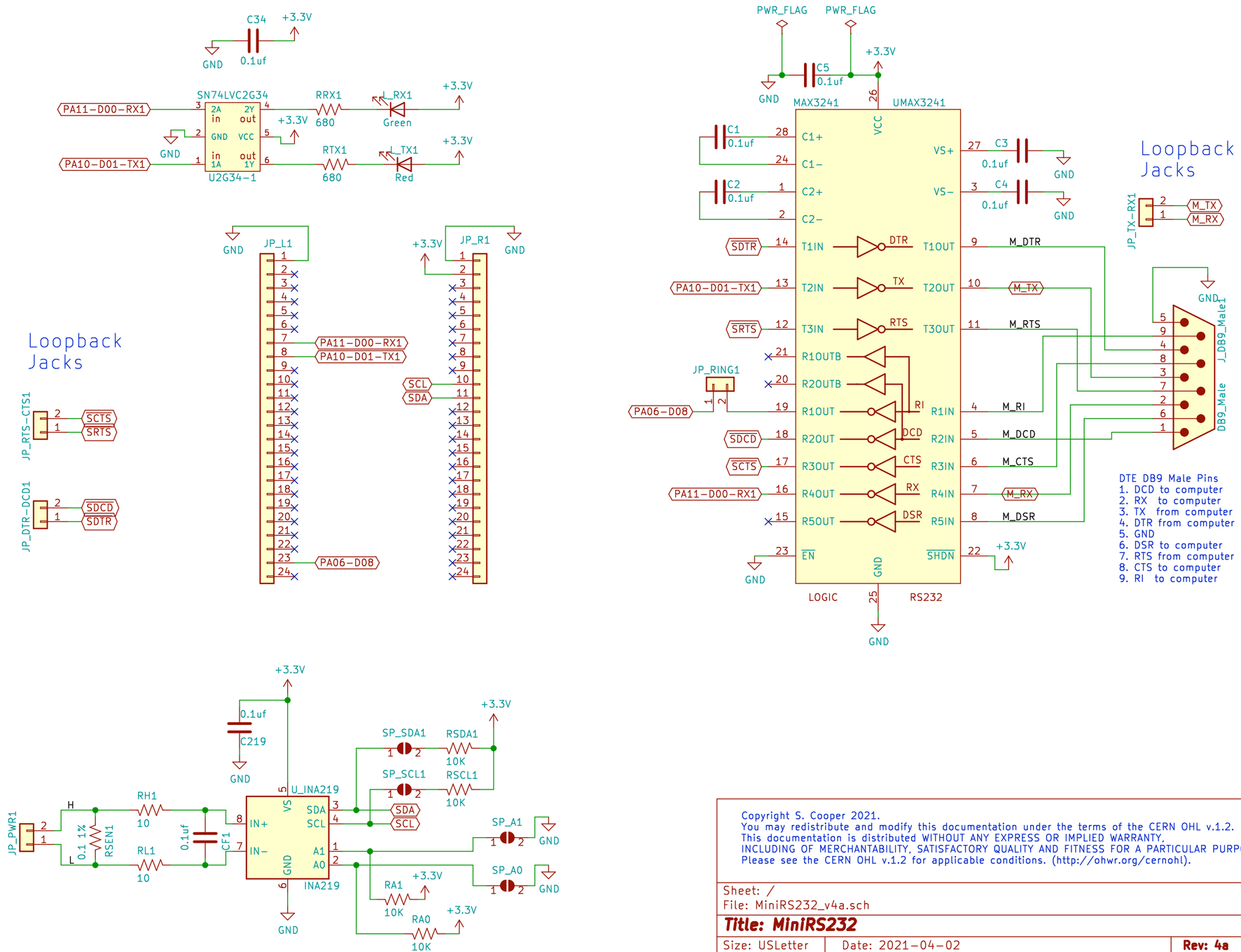

Copyright S. Cooper 2021.
You may redistribute and modify this documentation under the terms of the CERN OHL v.1.2.
This documentation is distributed WITHOUT ANY EXPRESS OR IMPLIED WARRANTY,
INCLUDING OF MERCHANTABILITY, SATISFACTORY QUALITY AND FITNESS FOR A PARTICULAR PURPOSE.
Please see the CERN OHL v.1.2 for applicable conditions. (http://ohwr.org/cernohl).

Sheet: /
File: MiniRS232_v4a.sch

Title: MiniRS232

Size: USLetter	Date: 2021-04-02	Rev: 4a
KiCad E.D.A. kicad (5.1.8-0-10_14)		Id: 1/1