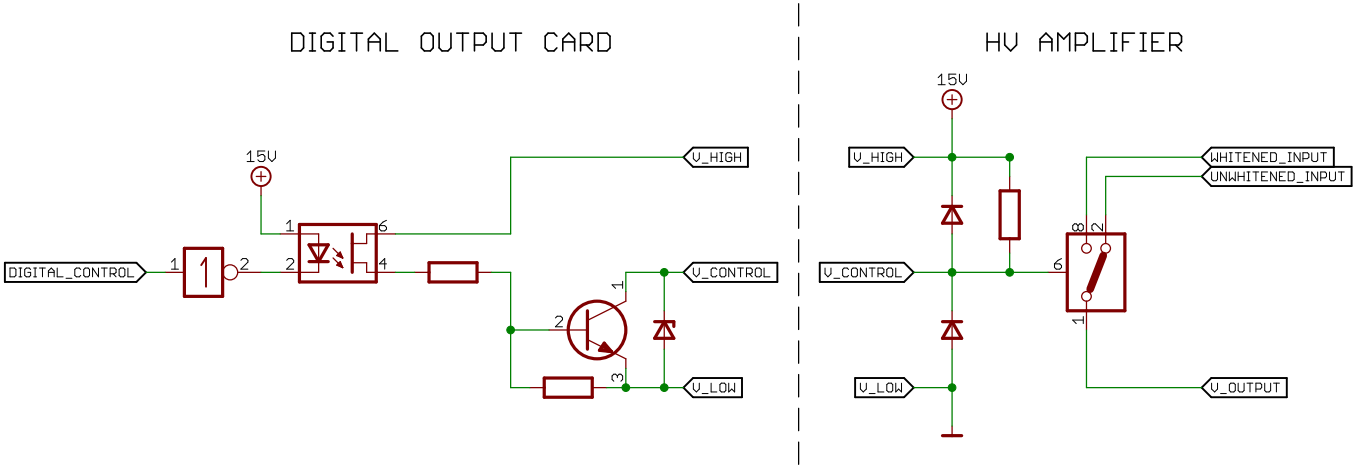
DIGITAL OUTPUT CARD
15V
V_HIGH
DIGITAL_CONTROL
1
2
6
4
V_CONTROL
V_LOW
3
HV AMPLIFIER
15V
V_HIGH
V_CONTROL
V_LOW
WHITENED_INPUT
UNWHITENED_INPUT
V_OUTPUT
8
2
6
1