Electrical Circuit Diagrams

SERIAL NUMBER:

SET No.

ELECTRICAL DIAGRAM SET No.

Machine type: VQC-15/40

Machine No.: std

Set No.: 42430WB

Date: OCT. 3, '86

Drawn by: Y. Nomura

Checked by: H. Shiota

Approved by:

Line voltage	200 ~ 480 V	NC equipment	MAZATROL CAM M-2 (M2B)		
Input power requirements	TRANSFORMAR 23.8 KVA	Spindle motor	AC 3.7/5.5, DC. 5.5/7.5 KW	AC SERVO SYSTEM	

ROM No.	YM2B-53G
Option	·2PALLET CHANGER ·NC ROTARY TABLE ·INDEX TABLE ·LINEAR SCALE FEED BACK ·10000rpm ·CALENDER TIMER ·AUTO POWER OFF ·CPU LINK ·EARTH LEAKAGE BREAKER ·OIL CHILLER ·AIR BLAST ·PATLIGHT ·30 TOOLS etc

Elementary Diagram List

①	424308110 0½ A	21	424048113 0	41	424048115 1
2	100 2/2	22	131	42	152
3	0481102	23	132	43	153
4	103	24	133	44	
⑤	1381104A	25	134	45	155
6	105	26	135	46	156
7	1681106	27	136	47	157
8	1381107	28	137	48	158
9	108	29		49	159
10	109	30		50	160
11		31	140	51	161
12		32	141	52	162
13		33	142	53	163
14		34	143	54	164
15		35	144	55	165
16	3081120	36	145	56	166
17	121	37	146	57	167
18	122	38	147	58	168
19		39	148	59	
20		40		60	

Remarks

SET FOR "42430WA" WITHOUT ○ MARK

Set No. 42430WB

YAMAZAKI MAZAK CORPORATION

Set No.: 42430WB Machine No.: std

Control Circuit Diagram
Parts List

1 ○	424308130 0½ A	31	424308133 0½	61	424168136 2	Remarks
2 ○	300 2/3 A	32	1681330 2/2	62	1381363	
3	300 2/3	33 ○	3081331 A	63		
4	301 1/3	34	332	64	365	
5 ○	301 2/3 A	35	333	65	1681366 A	
6	301 2/3	36 ○	334 A	66		
7	1681302	37		67		
8	0481303	38	1381336	68		
9	3081304	39 ○	3081337 A	69		
10 ○	305 A	40	338 1/5	70 ○	3081371 A	
11		41	2/5	71		
12	307	42	3/5	72		
13 ○	308 A	43 ○	4/5 A	73		
14	1681309	44	338 5/5	74		
15	3081310	45		75		
17	1681311	46 ○	340 A	76		
17	3081312	47		77		
18		48		78		
19	1681314 A	49 ○	346 A	79		
20		50		80		
21		51 ○	350 A	81	168 1391 1/2	
22		52 ○	351 A	82	391 2/2	
23		53	352	83		
24		54		84		
25	3081321	55		85		
26	322	56		86		
27	323	57		87		
28	324	58		88		
29	325	59		89		
30		60		90		

Set No. 42430WB

YAMAZAKI MAZAK CORPORATION

Set No.: 42430WB Machine No.: std Page: 3/6

Control Circuit Diagram
Parts List

1	○	424308140 0 1/3	A	31		424158142 4		61	4240481457	Remarks
2	○	400 2/3	A	32		425		62		
3		400 2/3		33				63		
4		401 1/2		34				64		
5	○	1681401 1/2	A	35				65	1681470 1/2	
6		3081402 1/2		36				66	470 1/2	
7		402 1/2		37				67	471	
8		1681403		38		3081431 1/2		68	472	
9	○	3081404 1/4	A	39		1681431 1/2		69		
10	○	404 3/4	A	40				70		
11	○	404 3/4	A	41				71	3081480	
12	○	404 4/4	A	42				72	1681481	
13		405		43				73		
14	○	1681406B		44				74		
15	○	3081407A		45		0481441		75		
17	○	408A		46				76	485 1/2	
17		1681409A		47				77	485 2/2	
18	○	3081410A		48				78		
19		1681411		49				79	490 1/3	
20	○	3081412A		50				80	490 2/3	
21		1681413		51				81	490 3/3	
22		414A 1/2		52		450 1/3		82	491	
23		414A 2/2		53		450 2/3		83	492	
24				54		450 3/3		84		
25				55				85		
26				56	○	3081453 1/2	A	86	4241681700	
27				57	○	453 2/2	A	87	701	
28		1581421		58				88	1381704	
29				59		1681455		89	1681710	
30				60		0481456		90		

Set No. 42430WB

YAMAZAKI MAZAK CORPORATION

Set No.: 42430WB Machine No.: std Page: 4/6

Control Circuit Diagram
Parts List

1	4241681801 6/100		31				61		Remarks
2			32				62		No1 ~ 10
3			33				63		PC SEQUENCE
4			34				64		LADDER DIAGRAM
5			35				65		YMZB 53G
6			36				66		TOTAL SHEET 103
7			37				67		
8			38				68		
9			39				69		
10		801 6/100	40				70		
11			41				71		
12			42				72		
13			43				73		
14			44				74		
15			45				75		
17			46				76		
17			47				77		
18			48				78		
19			49				79		
20			50				80		
21			51				81		
22			52				82		
23			53				83		
24			54				84		
25			55				85		
26			56				86		
27			57				87		
28			58				88		
29			59				89		
30			60				90		

Set No. 42430WB

YAMAZAKI MAZAK CORPORATION

Set No.: 42430WB Machine No.: std

Control Circuit Diagram
Parts List

1	4240199201D	31	742409R0102	61	742422R0102	Remarks
2		32	0201	62	0202	
3	742401R0102	33	0301	63		
4	0201	34	0401	64	24R0101	
5	0301	35	0501	65	0201	
6	0401	36	0601	66	0301	
7	0501	37		67	0400	
8	0601	38	10R0101	68		
9		39	0201	69	28R0100	
10	02R0103	40		70	0200	
11	0200	41	11R0100	71	0300	
12	0301	42	0200	72		
13	0400	43		73	29R0101	
14		44	12R0102	74	0201	
15	03R0103	45	0201	75		
17	0201	46	0320	76	38R0100	
17	0301	47		77	0200	
18		48	17R0102	78	0300	
19	04R0101	49	0202	79		
20	0201	50		80		
21		51	18R0101	81		
22	06R0101	52	0201	82		
23	0201	53		83		
24		54	20R0103	84		
25	08R0102	55	0202	85		
26	0201	56		86		
27	0301	57	21R0102	87		
28	0401	58	0202	88		
29	0501	59	0301	89		
30	0600	60		90		

Set No. 42430WB

YAMAZAKI MAZAK CORPORATION

Set No.: 42430WB Machine No.: std

Control Circuit Diagram
Parts List

1	30-60368 1/3	31		61		Remarks
2	30-60368 2/3	32		62		NE, 1~12
3	30-60368 3/3	33		63		SSR BOARD
4	57-81320-02	34		64		SPECIFICATION
5	23-81320-02 1/2	35		65		
6	23-81320-02 2/2	36		66		
7	30-60374 1/3	37		67		
8	30-60374 2/3	38		68		
9	30-60374 3/3	39		69		
10	57-81321-02	40		70		
11	23-81321-02 1/2	41		71		
12	23-81321-02 2/2	42		72		
13		43		73		
14		44		74		
15		45		75		
17		46		76		
17		47		77		
18		48		78		
19		49		79		
20		50		80		
21		51		81		
22		52		82		
23		53		83		
24		54		84		
25		55		85		
26		56		86		
27		57		87		
28		58		88		
29		59		89		
30		60		90		

Set No. 42430WB

YAMAZAKI MAZAK CORPORATION

ELEMENTARY DIAGRAM LIST

SHEET	TITLE	DRAWING NO.
02	MACHINING CENTER M CODE FORMAT A SIGHT - (1)	4240481102
03	do. (2)	103
04	LS, PRS, PS, FLS TABLE (1)	1381104 A
05	do. (2)	105
06	do. (3)	1681106
07	SOLENOID TABLE (1)	1381107
08	do. (2)	108
09	do. (3)	109
20	TABLE OF NONVOLATILE MEMORY REGISTER (1)	3081120
21	do. (2)	121
22	SEQUENCE PARAMETER	122
30	TABLE OF ALARM (JAPANESE)	1481130
31	do. (1)	131
32	do. (2)	132
33	do. (3)	133
34	do. (4)	134
35	do. (5)	135
36	do. (6)	136
37	do. (7)	137

DRAWING NO. CHANGE Nov. 4. '86 [illegible]

APPROVED

DESIGNED K. [illegible]

DRAWN

Mazak YAMAZAKI MAZAK CORPORATION

TITLE VQC/15/40 SPECIFICATION LIST

CONTROL MAZATROL

DRAWING NO. 4243081100 A

SHEET 1 OF 2

SIZE 3

DRAWING NO. 4243081100 A SHEET 1 OF 2

ELEMENTARY DIAGRAM LIST

SHEET	TITLE	DRAWING NO.
40	THE METHOD OF USING ALARM TABLE	4240481140
41	TABLE OF ALARM (1)	141
42	do. (2)	142
43	do. (3)	143
44	do. (4)	144
45	do. (5)	145
46	do. (6)	146
47	do. (7)	147
48	do. (8)	148
51	INPUT (1) MACHINE → PC	151
52	do. (2) do.	152
53	OUTPUT (1) PC → MACHINE	153
55	IMAGINARY RELAY (1)	155
56	do. (2)	156
57	do. (3)	157
58	do. (4)	158
59	TIMER (T), COUNTER (C) INPUT	159
60	do. OUTPUT	160
61	ALARM	161
62	OUTPUT (1) PC → NC	162
63	do. (2) do.	163
64	INPUT (1) NC → PC	164
65	do. (2) do.	165
66	OPERATIONAL PANEL INPUT	166
67	DATA RESISTOR (1)	167
68	do. (2)	168

INDEX NUMBER
SHEET LINE

APPROVED
DESIGNED
DRAWN

MAZAK
YAMAZAKI MAZAK CORPORATION

TITLE VQC/S/40 SPECIFICATION LIST

CONTROL MAZATROL
DRAWING NO. 4240481100
SHEET 2 OF 2

SIZE 3

DRAWING NO. 4240481100
SHEET 2 OF 2

M CODE	FORMAT	MAZA TROL	EIA /ISO	USES
00	PROGRAM STOP	B	B	ALL TYPE
01	OPTIONAL STOP	B	B	"
02	END OF PROGRAM		B	"
03	SPINDLE START FORWARD	B	B	"
04	SPINDLE START REVERSE	B	B	"
05	SPINDLE STOP	B	B	"
06	TOOL CHANGE			"
07	COOLANT MIST START	OP	OP	"
08	COOLANT FLOOD START	B	B	"
09	ALL COOLANT STOP	B	B	"
10	TOOL CLAMP			YMS
11	TOOL UNCLAMP			"
12				
13	SPINDLE ORIENT LOCK			TBR
14	SPINDLE ORIENT RELEASE			"
15	MAGAZINE COVER CLOSE	B	B	DRUM
16	MAGAZINE COVER OPEN	B	B	"
17	ARM MAGAZINE SIDE			ARM SWING
18	ARM SPINDLE SIDE			"
19	SPINDLE STOP ORIENTED	B	B	ALL TYPE
20	AUX. HEAD CLAMP			YMS
21	AUX. HEAD UNCLAMP			
22	-			ALL TYPE
23	ERROR DETECT ON	B	B	"
24	ERROR DETECT OFF	B	B	"
25	DRUM SHIFTER RETRACT			DRUM
26	ROBOT ONE STEP FEED			ROBOT
27	DRUM LOAD			DRUM
28	DRUM UNLOAD			"
29	DRUM TURN			"
30	END OF TAPE WITH RIWIND		B	ALL TYPE
31	OVER TRAVEL BYPASS			YMS
32	CANCEL OVER TRAVEL BYPASS			"
33	MESURING ARM EXTEND			TBR
34	MESURING ARM RETRACT			"
35	TOOL BREAKAGE SEARCH	OP	OP	"
36	SPINDLE RANGE / / LOW			SPINDLE
37	SPINDLE RANGE / LOW MIDDLE LOW			"
38	SPINDLE RANGE LOW MIDDLE MIDDLE HIGH			"
39	SPINDLE RANGE HIGH HIGH HIGH			"
40	SPINDLE NEUTRAL			"
41	*1 TILTING TABLE 0°			TABLE
42	*1 TILTING TABLE 90° / REVERSE DIRECTION TABLE			"
43	ERIKSON & NIKKEN ← EXT M13	OP	OP	"
44	ERIKSON & NIKKEN ← RET M14	OP	OP	"
45	ERIKSON & NIKKEN ← M10	OP	OP	"
46	TABLE UP			"
47	TABLE DOWN			"
48	CANCEL M49		B	ALL TYPE
49	OVERRIDE CANCEL		B	"

*1. Use for Table control when specification of special.

B BASIC OP OPTION

DRAWING NO. 4240481102
SHEET ____ OF ____

INDEX NUMBER
SHEET LINE

DWN. BY Kikuchi
DATE 86.12.19
CHK'D BY M.S
DATE 86.12.25

Mazak
YAMAZAKI MAZAK CORPORATION

TITLE VQC-15/40 MACHINING CENTER M CODE FORMAT A SIGHT (1)

CONTROL MAZY
DRAWING NO. 4240481102
SHEET ____ OF ____
SIZE 3

M CODE	FORMAT	MAZA TROL	EIA /ISO	USES
50	AIR BLAST START	(B)	(B)	AIR & COOLANT
51	COOLANT THRU. SPDL./ADAPTOR	(OP)	(OP)	"
52	TAP COOLANT			"
53	AIR HOLE COOL/ADAPTOR			"
54	CHIP AIR BLOW			"
55	(INTENTIONALY BLANK)			—
56	(" ")			—
57				
58	SPARE TOOL CHECK	(OP)	(OP)	TLM
59	PROGRAM END READY			FMS
60	PALLET TURN			PALLET
61	PALLET LOAD	(OP)	(OP)	"
62	PALLET UNLOAD	(OP)	(OP)	"
63	PALLET RETRACT			"
64	PALLET DOOR CLOSE	(OP)	(OP)	"
65	PALLET DOOR OPEN	(OP)	(OP)	"
66	*1 (GENERAL USE FOR PALLET)			"
67	PALLET CYLINDER EXTEND			"
68	PALLET CLAMP	(OP)	(OP)	"
69	PALLET UNCLAMP	(OP)	(OP)	"
70	PALLET STATION No.10			
71	" 1	(OP)	(OP)	
72	" 2	(OP)	(OP)	
73	" 3			
74	" 4			
75	" 5			
76	" 6			
77	" 7			
78	" 8			
79	" 9			
80				
81				
82				
83				
84				
85				
86				
87				
88				
89				
90	MIRROR IMAGE OFF	(B)	(B)	ALL TYPE
91	" " X ON	(B)	(B)	"
92	" " Y ON	(B)	(B)	"
93	" " B ON			"
94				
95				
96				
97				"
98	CALL OF SUBPROGRAM		(B)	ALL TYPE
99	END OF SUBPROGRAM		(B)	"

*Use for pallet control when specification of special.

(B) BASIC (OP) OPTION

DRAWING NO. 4240481103
SHEET. ___ OF. ___

INDEX NUMBER

DRN. BY Kibuchi DATE 91.8.24
CHK'D BY H.S DATE 91.9.25

Mazak
YAMAZAKI MAZAK CORPORATION

TITLE VQC-15/40 MACHINING CENTER M CODE FORMAT A SIGHT (2)

CONTROL M2V
DRAWING NO. 4240481103
SHEET ___ OF ___
SIZE 3

SHEET LINE
INDEX NUMBER

INDEX NUMBER

SHEET | LINE

A ADD OVER TRAVEL LS. 8-30-88 MIWA

NO.		MACHINE VQC-15/40	VQC-15/40 + 2 P.C	VQC-15/40 +30 Tools
1	ARM NO. 1			
2	ARM NO. 2			
4	ARM RETRACT			
5	ARM EXTEND			
8	TOOL UNCLAMP	PRS		
9	TOOL CLAMP	PRS		
10	HIGH SPEED GEAR			
11	SPINDLE GEAR NEUTRAL			
12	LOW SPEED GEAR			
13	MAGAZINE INPOSITION	PRS		
14	SWING ARM MAGAZINE SIDE			
15	SWING ARM SPINDLE SIDE			
16				
17				
18	MAGAZINE COVER OPEN	RS		RS
19	MAGAZINE COVER CLOSE	RS		RS
20				
21	MAGAZINE POSITION 1	PRS		PRS
22	MAGAZINE POSITION 2	PRS		PRS
23	MAGAZINE POSITION 4	PRS		PRS
24	MAGAZINE POSITION 8	PRS		PRS
25	MAGAZINE POSITION X			PRS
26	MAGAZINE PIN RETRACT			
30	MAGAZINE QUADRANT (30 Tools)			
31	SWING ARM PARKED POSITION			
32	SWING ARM UP			
33	SWING ARM DOWN			
34	SPINDLE ORIENT NECESSARY POS.			
38	TOOL LENGTH MEASURE DECELERATION	PRS		
39	TOOL LENGTH MEASURE SKIP	PRS		
42	X AXIS ZERO RETURN	LS		
43	-X OVER TRAVEL	LS △		
44	+X OVER TRAVEL			
52	Y AXIS ZERO RETURN	LS		
53	-Y OVER TRAVEL	LS △		
54	+Y OVER TRAVEL			
55	+Y 2nd OVER TRAVEL	PRS		
62	Z AXIS ZERO RETURN	LS		
63	-Z OVER TRAVEL	LS △		
64	+Z OVER TRAVEL			
65	+Z 2nd OVER TRAVEL			
66	-Z 2nd OVER TRAVEL	PRS		
72	B AXIS ZERO RETURN			
77	TABLE UNCLAMP			
83	PALLET 1 RETRACT		PRS	
84	PALLET 1 EXTEND		PRS	
87	PALLET STATION 1		LS	
88	PALLET STATION 2		LS	
92	PALLET 1 ON CARRIER		LS	
93	PALLET 2 ON CARRIER		LS	

DRN. BY K. Kajiya DATE Apr. 3. '85
CHK'D BY H.S. DATE Apr. 3. '85

Mazak
YAMAZAKI MAZAK CORPORATION

TITLE VQC-15/40 LS, PRS, PS, FLS TABLE (1)

CONTROL MZV
DRAWING NO. 4241381104 A
SHEET ____ OF ____
SIZE 3

SHEET | LINE
INDEX NUMBER

DRAWING NO. 4241381104 A
SHEET ____ OF ____

NO.		MACHINE			
		VQC-15/40	VQC-15/40 +2PC	VQC-15/40 +YME	
96	PALLET DOOR CLOSE		RS		
97	PALLET DOOR OPEN		RS		
98	PALLET CLAMP		PRS		
99	PALLET UNCLAMP		PRS		
140	DOOR OPEN / DOOR INTERLOCK			LS	
141	DOOR 2 CLOSE / DOOR INTERLOCK				
142	MEASURING ARM EXTEND	RS			
143	MEASURING ARM RETRACT	RS			
146	TOOL EJECT COVER INTERLOCK			LS	
181	TOOL DETECTOR (MAGAZINE)	PHS			
182	TOOL DETECTOR (SPINDLE)	PRS			
220	L/D SIDE GUARD ON				
221	PALLET ON CARRIER				
222	PALLET SELECT STOP 1				
223	PALLET SELECT STOP 2				
224	M/C SIDE CARRIER FORWARD STOP				
225	M/C SIDE CARRIER FORWARD DEC.				
226	M/C SIDE CARRIER REVERSE STOP				
227	M/C SIDE CARRIER REVERSE DEC.				
228	L/D SIDE CARRIER FORWARD STOP				
229	L/D SIDE CARRIER FORWARD DEC.				
230	L/D SIDE CARRIER REVERSE STOP				
231	L/D SIDE CARRIER REVERSE DEC.				
332	LIFTER BASE RIGHT SHIFT				
333	LIFTER BASE LEFT SHIFT				
334	LIFTER BASE CENTER				
335	LIFTER CHANE STOP POS. 1				
336	LIFTER CHANE STOP POS. 2				
337	LIFTER TOP POSITION				
338	LIFTER MIDDLE POSITION				
339	LIFTER BOTTOM POSITION				
340	LOADING POSITION GUIDE UP				
341	LOADING POSITION GUIDE DOWN				
342	PALLET FORK EXTEND				
343	PALLET FORK RETRACT				
344	LOADING STATION CHANE STOP 1				
345	LOADING STATION CHANE STOP 2				
346	LOADING STATION CHANE STOP 3				
347	LOADING STATION CHANE STOP 4				
348	PALLET ON STATION 1				
349	PALLET ON STATION 2				
350	PALLET ON STATION 3				
351	PALLET ON STATION 4				
352	PALLET ON STATION 5				
353	PALLET ON STATION 6				
354	PALLET ON LOADING STATION				
355	PALLET NO. BCD 1				
356	PALLET NO. BCD 2				
357	PALLET NO. BCD 4				
358	LIFTER STOPPER PIN RETRACT				
359	LIFTER CHEAN TENSION				
363	PALLET LOCK		RS		
364	PALLET UNLOCK		RS		

INDEX NUMBER

SHEET | LINE

DRN. BY Ishiura DATE May 3 '85
CHK'D BY H.S. DATE May 3 '85

Mazak
YAMAZAKI MAZAK CORPORATION

TITLE VQC-15/40 LS, PRS, PS, FLS TABLE (2)

CONTROL MZV
DRAWING NO. 4241381105
SHEET ___ OF ___
SIZE 3

SHEET | LINE

INDEX NUMBER

DRAWING NO. 4241381105
SHEET ___ OF ___

No.		MACHINE													
		VQC-15/40		VQC-15/40 +30 TOOLS											
368	MAGAZINE INPOSITION CW			PRS											
369	MAGAZINE MOTOR INPOSITION			PRS											
1	HYDRAULIC PRESSURE	PS													
5	HEAD LUBE FAILURE	PS													
40	WAY LUBE WARNING PRESSURE	PS	A/B												
41	WAY LUBE WARNING FLOW	FLS	A/B												

INDEX NUMBER

SHEET | LINE

DRN. BY K. Kikuchi DATE May 3, '85
CHK'D BY [illegible] DATE May 3-'85

Mazak
YAMAZAKI MAZAK CORPORATION

TITLE VQC-15/40 LS, PRS, PS, FLS TABLE (3)

CONTROL MZV
DRAWING NO. 42416 81106
SHEET ___ OF ___
SIZE 3

DRAWING NO. 42416 81106
SHEET ___ OF ___

No.			MACHINE		
			VQC-15/40	VAC-15/40 + 2 P.C.	VQC-15/40 + 30 Tools
1	ARM RETRACT/EXTEND	1A/1B			
2	ARM 45°	2			
3	ARM 180° CW/CCW	3A/3B			
4	ARM 180° CCW	4			
5	TOOL UNLOAD/LOAD	5A/5B			
6					
7					
8	MAGAZINE FORWARD/REVERSE	8A/8B	O		O
9					
10	TOOL UNCLAMP	10	O		
11	SPINDLE ORIENT	11			
12	GEAR SHIFT HIGH	12			
13	GEAR SHIFT LOW	13			
14	ARM STANDBY	14			
15	SPINDLE AIR BLAST	15	O		
16	AIR BLAST	16	O		
17	MIST COOLANT	17	O OP.		
18	INDEX TABLE TURN	18			
19	TABLE ROTATE DEC.				
20	ROTARY TABLE UNCLAMP	20	O OP.		
21					
22	PALLET CLAMP/UNCLAMP	22A/22B		O	
23					
24	PALLET AIR BLAST	24		O	
25	PALLET DOOR(1) OPEN/CLOSE	25A/25B		O	
26	MAGAZINE STOP PIN EXTEND/RETRACT	26A/26B			
27	MAGAZINE COVER CLOSE	27	O		
28	MAGAZINE ROTATE HIGH/LOW	28A/28B			
29	SHUTTER COVER OPEN	29			
30					
31	FLOOD COOLANT	31	O		
32					
33					
34					
35	DUST INHALE ELIMINATE	35	O		
36	COOLANT THROUGH SPINDLE	36	O OP.		
37	TAP COOLANT	37			
38	HEAD CLAMP	38			
39					
40	ATC ARM CW/CCW	40A/40B			
41	ATC ARM STOP PIN 215°/35°	41A/41B			
42	ATC ARM STOP PIN 0°/180°	42			
43	ATC ARM MAGAZINE/SPINDLE	43A/43B			
44	GEAR SHIFT NEUTRAL/MIDDLE	44A/44B			
45					
46					
47					
48	ATC ARM FINGER 1 UNCLAMP	48			
49	ATC ARM FINGER 2 UNCLAMP	49			
50	Y AXIS BRAKE	50			
51	MAGAZINE BRAKE	51			
52					
53					
54	SPINDLE MOTOR COOLING BLOW	54			
55					
56					
57					
58					
59					
60	Z AXIS BRAKE	60	O		
61	MMS AIR JET	61	O		
62	MEASURING ARM EXTEND	62	O		
63					
64					
65					
66					
67					
68					
69					
70	AUX. HEAD TOOL UNCLAMP	70			

INDEX NUMBER
SHEET LINE

DRN. BY
DATE Apr. 3. '85
CHK'D BY
DATE Apr. 3. '85

Mazak
YAMAZAKI MAZAK CORPORATION

TITLE VQC-15/40 SOLENOID TABLE (1)

CONTROL MZV
DRAWING NO. 4241381107
SHEET ____ OF ____
SIZE 3

DRAWING NO. 4241381107
SHEET ____ OF ____

| No. | | | MACHINE | | |

No.			MACHINE											
			VQC-15/40		VQC-15/40 +2PC		VQC-15/40 +3ツナギ							
171	PALLET UNLOCK	171			○									
172	PALLET STATION UNLOCK	172			○									
174	MAGAZINE RUN	174					○							

INDEX NUMBER

SHEET | LINE

DRN. BY K. Ichiki DATE 4/Apr 3. '85

CHK'D BY H.S. DATE Mar. 1. '85

Mazak

YAMAZAKI MAZAK CORPORATION

TITLE VQC-15/40 SOLENOID TABLE (3)

CONTROL M2V

DRAWING NO. 4241381109

SHEET ___ OF ___

SIZE 3

SHEET | LINE

INDEX NUMBER

DRAWING NO. 4241381109

SHEET ___ OF ___

ADDRESS		NAME	COMMENT (SET No.)	VQC-15 (old) STD.	VQC-15/40 30Tools	VQC-15/40 EAO SHOW	VQC-15 (new) STD.
SQ0 (D80)	1	15TS	15 TOOLS SELECT	0		0	1
	2	20TS	20 TOOLS SELECT	0		0	0
	4	24TS	24 TOOLS SELECT	0		0	0
	8	30TS	30 TOOLS SELECT	0	1	1	0
	16	40TS	40 TOOLS SELECT	0		0	0
	32	STPS	MAGAZINE STOP PIN SELECT	0		0	0
	64	YATCNG	ZERO RETURN Y-AXIS NEGLECT	0		0	0
	128	DRUMCH	DRUM CHANGE	0		0	0
	T			0	+8	8	1

ADDRESS		NAME	COMMENT (SET No.)	VQC-15 STD.	VQC-15/40 EAO SHOW		
SQ1 (D81)	1	2PCS	2PC CONTROL SELECT	0	1		1
	2	PGAPS	PALLET GAP FEED STOP SELECT	0			0
	4	CDOORS	AUTO COOLANT DOOR SELECT	0			0
	8	DITLS	DOOR INTERLOCK SELECT	0		1	1
	16	MPCS	MULTI-PALLET CHANGER SELECT	0			0
	32	EXTFINS	EXTERNAL FINISH SIGNAL SELECT	1			0
	64	ESBKRSTS	EXTERNAL SINGLE BLOCK RESET SELECT	0			0
	128	B/MS	M(M70~89)/B BCD DECODE SELECT	0			0
	T			32	+1	+8	9

ADDRESS		NAME	COMMENT (SET No.)	VQC-15 STD.	VQC-15/40 EAO SHOW		
SQ2 (D82)	1	2NDFCS	SECOND FLOOD COOLANT SELECT	0	0		
	2	TAPCS	TAP COOLANT SELECT	0	0		
	4	2NDABS	SECOND AIR BLAST SELECT	0	1		
	8	ATCABS	ATC AIR BLAST SELECT	0	0		
	16	NCROTS	NC ROTARY TABLE SELECT	0	1		
	32	ITDIVS	INDEX TABLE DIVIDE SELECT	0	0		
	64	N/ES	NIKKEN INDEX TABLE SELECT	0	0		
	128	HWS	HIGH WORK SELECT	0	0		
	T			0	20		

ADDRESS		NAME	COMMENT (SET No.)	VQC-15 STD.	VQC-15/40 EAO SHOW		
SQ3 (D83)	1	CYFLS	CYCLE FINISH LAMP SELECT (M00, M01)	0	0		
	2	MMSS	MMS. SELECT	0	0		
	4	TBRS	TBR. SELECT	0	0		
	8	ROBOT	ROBOT	0	1		
	16	ADDIS	ADDITIONAL INPUT SIGNAL SELECT	0	0		
	32	FMSS	FMS. SELECT	0	0		
	64	MHLS	M100, M101 USE SELECT	0	0		
	128	NGAL79	NEGLECT AL79	0	0		
	T			0	8		

ADDRESS		NAME	COMMENT (SET No.)	VQC-15 STD.	VQC-15/40 EAO SHOW		
SQ4 (D84)	1	ESPDL	MITSUBISHI, FANUC SELECT	0	0		
	2	TEPLS	NORMAL, V-20 4PC. SELECT	0	0		
	4	RCTS	RECESSING TOOL SELECT	0	0		
	8	XATCS	X-AXIS ZERO RETURN AT ATC	0	0		
	16	10000S	SPINDLE 10,000 r.p.m. SELECT	0	0		
	32	AHS	AUX. HEAD SELECT	0	0		
	64	3DRUMCH	3 DRUM CHANGE SELECT	0	0		
	128	THMABNS	THERMO ABNORMAL SELECT	0	0		
	T			0	0		

ADDRESS		NAME	COMMENT (SET No.)	VQC-15 STD.	VQC-15/40 EAO SHOW		
SQ5 (D85)	1	AHCLS	AUX. HEAD COOLANT SELECT	0	0		
	2	AZRNS	ATC ZERO RETURN NEGLECT SELECT	0	0		
	4	M06S	M 06 FORM SELECT	0	0		
	8	TLATC	TOOL LOAD AT ATC. SELECT	0	0		
	16	STARS	STACKER PALLET CHANGER SELECT	0	0		
	32	SRNAS	SPINDLE RUN AFTER ATC. SELECT	0	0		
	64			0	0		
	128			0	0		
	T			0	0		

DATA-REGISTER bit

	F	E	D	C	B	A	9	8	7	6	5	4	3	2	1	0
32768	16384	8192	4096	2048	1024	512	256	128	64	32	16	8	4	2	1	

DRAWING NO. 42430 S1120
SHEET ___ OF ___

DRN. BY K.Ishiwata
DATE 5.1.10.'85
CHK'D BY H.S
DATE

Mazak
YAMAZAKI MAZAK CORPORATION

TITLE VQC-15/40
TABLE OF NONVOLATILE MEMORY REGISTER

CONTROL MZV
DRAWING NO. 42430 S1120
SHEET 1 OF
SIZE 3

ADDRESS		NAME	SET No. / COMMENT	VQC-15 / STD.			
SQF	1		PROGRAMER ENABLE ACCESS MODULE 1, 2 SELECT	0			
	2		MODULE 2. ACTIVE/STOP SELECT	0			
	4		MODULE 1. ACTIVE/STOP SELECT	0			
	8		MEMORY 4K/8K STEP SELECT	8			
	16						
	32						
	64						
	128						
	T			8			

DATA-REGISTER bit

F	E	D	C	B	A	9	8	7	6	5	4	3	2	1	0
32768	16384	8192	4096	2048	1024	512	256	128	64	32	16	8	4	2	1

DRAWING NO. 42430 81121 SHEET. ___ OF. ___

INDEX NUMBER / LINE / SHEET

DRN. BY K. Ikuwa
DATE May 3. '85
CHK'D BY M.S
DATE May 3. '85

Mazak
YAMAZAKI MAZAK CORPORATION

TITLE VQC-15/40 TABLE OF NONVOLATILE MEMORY REGISTER

CONTROL MZV
DRAWING NO. 42430 81121
SHEET. ___ OF. ___
SIZE 3

SYMBOL	DATA RESIS-TOR	NAME	COMMENT	BIT
M400		15TS	15 TOOLS ; 1 new. 16TOOLS "1". old 16TOOLS "0"	1
01		~~20TS~~	~~20 TOOLS ; 1~~	2
02		~~24TS~~	~~24 TOOLS ; 1~~	4
03	D80	30TS	30 TOOLS ; 1	8
04	(SQ0)	~~40TS~~	~~40 TOOLS ; 1~~	16
05		~~STPS~~	~~MAGAZINE STOP PIN ; 1~~	32
06		~~YATENG~~	~~ZERO RETURN Y AXIS NEGLECT ; 1~~	64
07		~~DRUMCH~~	~~DRUM CHANGE ; 1~~	128
M408		2PCS	2PC PC CONTROL ; 1 PC EXTERNAL CONTROL ; 0	1
09		~~PGAPS~~	~~PALLET GAP FEED STOP ; 1~~	2
10		CDOORS	AUTO COOLANT DOOR ; 1	4
11	D81	DITLS	DOOR INTERLOCK USE ; 1	8
12	(SQ1)	MPCS	MULTI-PALLET CHANGER ; 1 (EXTERNAL CONTROL)	16
13		EXTFINS	EXTERNAL FINISH SIGNAL ; 0	32
14		~~ESBKRSTS~~	~~EXTERNAL SINGLE BLOK RESET SELECT ; 1~~	64
15		~~B/MS~~	~~M DECODE M70~M89 SELECT ; 1 B DCD DECODE ; 0~~	128
M416		2NDFCS	SECOND FLOOD COOLANT ; 1	1
17		~~TAPCS~~	~~TAP COOLANT ; 1~~	2
18		2NDABS	SECOND AIR BLAST ; 1	4
19	D82	~~ATCABS~~	~~ATC AIR BLAST ; 1~~	8
20	(SQ2)	NCROTS	NC ROTARY TABLE ; 1	16
21		~~ITDWS~~	~~INDEX TABLE DIVIDE ; 1~~	32
22		N/ES	NIKKEN INDEX TABLE ; 1	64
23		~~HWS~~	~~HIGH WORK SELECT ; 1~~	128
M424		CYFLS	CYCLE FINISH LAMP (M00, M01) ; 1	1
25		~~MMSS~~	~~MMS ; 1~~	2
26		TBRS	TBR ; 1	4
27	D83	ROBOT	ROBOT ; 1	8
28	(SQ3)	ADDIS	ADDITIONAL INPUT SIGNAL ; 1	16
29		FMSS	FMS ; 1	32
30		~~MHIS~~	~~M100, M101 USE ; 1~~	64
31		~~NGAL79~~	~~NEGLECT AL79 ; 1~~	128
M432		~~FSPDL~~	~~MITSUBISHI ; 0 FANUC ; 1~~	1
33		TFPLS	NORMAL ; 0 V-20 4PC SELECT ; 1	2
34		RCTS	RECESSING TOOL SELECT ; 1	4
35	D84	XATCS	X AXIS ZERO RETURN AT ATC ; 1	2
36	(SQ4)	10000S	SPINDLE 10000 rpm SELECT ; 1	16
37		~~AHS~~	~~AUX. HEAD SELECT ; 1~~	32
38		~~3SRJMCH~~	~~3 DRUM CHANGE SELECT ; 1~~	64
39		THMABNS	THERMO. ABNORMAL SELECT ; 1	128
M496		~~SHCLS~~	~~AUX. HEAD COOLANT SELECT ; 1~~	1
97		AZRNS	ATC. ZERO RETURN NEGLECT SELECT ; 1	2
98		~~M06S~~	~~M 06 FARM SELECT ; 1~~	4
99	D85	TLATC	TOOL LOAD AT ATC. SELECT ; 1	8
500	(SQ5)	~~STAKS~~	~~STACKER PALLET CHANGER SELECT ; 1~~	16
01		~~SPNNS~~	~~SPINDLE RUN AFTER ATC SELECT ; 1~~	32
02		~~YZRTNS~~	~~Y, Z AXIS ZERO RETURN AT ONE TIME ; 1~~	64
03				128
M504				1
05				2
06				4
07	D86			8
08	(SQ6)			16
09				32
10				64
11				128
			~~PROGRAMER ENABLE ACCESS MODULE 1 ; 0 MODULE 2 ; 1~~	1
			~~MODULE 2 ACTIVE ; 0 STOP ; 1~~	2
			~~MODULE 1 ACTIVE ; 0 STOP ; 1~~	4
	(SQF)		MEMORY 4K STEP ; 0 2K STEP ; 1	8
				16
				32
				64
				128

INDEX NUMBER

SHEET | LINE

DRN. BY E.Ebata DATE Apr 3.85
CHK'D BY H.S DATE

Mazak

TITLE VQC-15/40 SEQUENCE PARAMETER

CONTROL MZV
DRAWING NO. 4243081122
SIZE A3
SHEET 3

DRAWING NO. 4243081122
SHEET ____ OF ____

アラーム一覧表

1．一覧表の利用法

アラームメッセージは、ＣＲＴ画面の左下にアラームNo並びにコメントで表示され機械に関係するアラームNoは、２００～２９９の範囲で設定されております。

表示されるアラームメッセージは、一覧表左側よりアラームNo，アラーム名称となっています。

次の欄は発生したアラームについて診断の為のNo及びアドレスが記載してあります。

上段ＡＬ－××は、シーケンス回路上のアラーム名称を示し、中段（Ｆ××）は、シーケンス回路上のリレーコイルを示し、下段（Ｈ××－×）は、シンダンで使用するアドレスNoを示します。

次にアラームの内容と機械の状態を記載し、右端の欄は、そのアラームとなった関連の検出器のＳＥＱ．No．並にＰ．Ｃ・１／０の信号シンボル，及びアドレスが記載され、最右端の数字は正常な状態のビットを（１又は０）で表示してあります。

例

アラームNo	アラーム名称	ＳＱアラームNo ＳＱコイルNo ビットアドレス	内　容	機械状態	アラーム関連検出器 ＳＱ．No 信号チェックアドレス
２０１	ユアツテイカ	ＡＬ－１ （Ｆ１） ［ＨＣＯ－１］	油圧低下連続２秒以上 →（××Ｓｅｃ）	フイードホルード １分後主軸停止	ＰＳ－１ （×７８） ［ＨＯＦ－０］　１

ＣＲＴ画面の左下に表示される。

内容の状態が（××秒）以上継続した時アラームとなる事を示す。

ＡＬ－１……シーケンス回路上のアラーム名称

（Ｆ－１）……シーケンス回路上のリレーコイル

［ＨＣＯ－１］……（Ｆ－１）のアドレス

インデックス

アドレスNo

ビットNo（０～７）

ＰＳ－１……検出器

（×７８）……Ｐ．Ｃシーケンス回路上のシンボル信号

［ＨＯＦ－０］……（×７８）のアドレス

［ＨＯＦ－０］が正常状態で１である事を示す。

2．シンダン画面のチェック方法

画面選択 キー－ シンダン キーにより、シンダン画面を選択します。

← → ↑ ↓ のカーソルキーにより画面上のＨにカーソルを止めます。Ｈは画面の左上に位置しています。

アルファベットキーと数値によりチェックしようとするとＨのアドレスNoを押し 設定 キーを押します。

例［ＨＣＯ－１］の場合 Ｃ Ｏ 設定 キーを押します。

これでシンダン画面のＨの位置に、０又は１で信号状態を表示します。

信号状態は、０は信号ＯＦＦ、１は信号ＯＮ状態である事を示します。

例

右図の場合　ＨＣＯ－１は　０ですから"ＯＦＦ"である。

又、ＨＣＯ－０は１ですから"ＯＮ"である事を示しています。

```
I/O CHECK
        7654 3210
HCO     0000 0001
 C1     0000 0000
 C2     0000 0000
 C3     0000 0000

H
```

DRAWING NO. 4240481130
SHEET. ____ OF. ____

INDEX NUMBER
SHEET　LINE
DRN. BY K.Ikeda DATE 61.8.29
CHK'D BY HS DATE 61.9.4
Mazak YAMAZAKI MAZAK CORPORATION
TITLE VQC-15/40 アラーム一覧表（使用法）
CONTROL MZV
DRAWING NO. 4240481130
SHEET. ____ OF. ____
SIZE 3
SHEET　LINE
INDEX NUMBER

アラーム No	アラーム名称	SQアラームNo SQコイルNo ビットアドレス	内　容	機械状態	アラーム関連検出器 SQ. No 信号チェックアドレス
201	ユアツテイカ	AL-1 (F1) [HC0-1]	油圧低下連続2秒以上	フィードホールド 1分後主軸停止	PS-1 (X78) [H0F-0] 1
202	マガジンインポジション PRS オフ フリョウ	AL-2 (F2) [HC0-2]	マガジンインポジションPRSがオフしている時、ツールロード、アンロードを指令するとアラームとなる。 指令中にオフとなる時もアラーム。	ロード、アンロード不可	PRS-13 (X0D) [H01-5] 0
203	アーム0°(60°) PRS オン フリョウ	AL-3 (F3) [HC0-3]	アームが45°振っても 0° PRSがオフしない時。 (5sec)	CRT表示のみ	
204	アーム0°(60°) PRS オフ フリョウ	AL-4 (F4) [HC0-4]	アームが0°に戻っているのに、 0° PRSがオンしない時。 (5sec)	完了返らず ATC途中ストップ	
205	アーム45° PRS オン フリョウ	AL-5 (F5) [HC0-5]	アームが0°に戻っているのに、 45° PRSがオフしない時。 (5sec)	CRT表示のみ	
206	アーム45° PRS オフ フリョウ	AL-6 (F6) [HC0-6]	アームが45°振っても、 45° PRSがオフしない時。 (5sec)	完了返らず ATC途中ストップ	
207	アーム0°(180) PRS オン フリョウ	AL-7 (F7) [HC0-7]	アームが180°振っても、 0°(180°)PRSがオフしない時。 (5sec)	CRT表示のみ	
208	アーム0°(180) PRS オフ フリョウ	AL-8 (F8) [HC1-0]	アームが0°に戻っているのに、 0°(180°)PRSがオンしない時。 (5sec)	完了返らず ATC途中ストップ	
209	アーム180° PRS オン フリョウ	AL-9 (F9) [HC1-1]	アームが0°に戻っているのに、 180° PRSがオフしない時。 (5sec)	CRT表示のみ	
210	アーム180° PRS オフ フリョウ	AL-10 (F10) [HC1-2]	アームが180°振っても 180° PRSがオンしない時。 (5sec)	完了返らず ATC途中ストップ	
211	アーム ハンテンPRS オン, オフ フリョウ	AL-11 (F11) [HC1-3]	アームがリトラクト(入)端にある時、180°旋回にてREVERSが切り換わらなかった時。(10sec)	完了返らず ATC途中ストップ	
212		AL-2 (F12) [HC1-4]			
213	アームリトラクトPRS オンフリョウ	AL-13 (F13) [HC1-5]	アームがイクステンド端にある時、 ARETPRSがオフしない時。 (5sec)		
214	アームリトラクト PRS オフ フリョウ	AL-14 (F14) [HC1-6]	アームがリトラクト(入)した時に、 ARETPRSがオンしない時。 (5sec)	完了返らず ATC途中ストップ	

DRAWING NO. 4240481131
SHEET ____ OF ____

INDEX NUMBER
SHEET LINE

DRN. BY Ichiura DATE 1.4.84
CHK'D BY HS DATE 1.4.84

Mazak
YAMAZAKI MAZAK CORPORATION

TITLE VQC-15/40 アラーム一覧表 (1)

CONTROL MZV
DRAWING NO. 4240481131
SHEET ____ OF ____
SIZE 3

アラーム No	アラーム名称	SQアラームNo SQコイルNo ビットアドレス	内　　容	機械状態	アラーム関連検出器 SQ. No 信号チェックアドレス
215	アームイクステンド PRS オン フリョウ	AL-15 (F15) [HC1-7]	アームがリトラクト(入端にある時、AEXTPRSがオフしない時。 (5sec)		
216	アームイクステンド PRS オフ フリョウ	AL-16 (F16) [HC2-0]	アームがイクステンド(出)端にある時に、AEXTPRSがオンしない時。 (5sec)	完了返らず ATC途中ストップ	
217	ツール ロード PRS オン フリョウ	AL-17 (F17) [HC2-1]	シフターがアンロード端にある時に、TLPRSがオフしない時。 (5sec)		
218	ツール ロード PRS オフ フリョウ	AL-18 (F18) [HC2-2]	シフターがロードした時に、TLPRSがオンしない時。 (12sec)	完了返らず ロード動作終わらない。	
219	ツール アンロード PRS オン フリョウ	A-19 (F19) [HC2-3]	シフターがロード端にある時に、TUPRSがオフしない時。 (12sec)		
220	ツール アンロード PRS オフ フリョウ	AL-20 (F2) [HC2-4]	シフターがアンロードした時に、TUPRSがオンしない時。 (12sec)	完了返らず アンロード動作終わらない。	
221	メカ オリエント PRS オン フリョウ	AL-21 (F21) [HC2-5]	アンオリエントしている時に、TUPRSがオフしない時。 (20sec)		
222	メカ オリエント PRS オフ フリョウ	AL-22 (F22) [HC2-6]	オリエントした時に、ORRRSがオンしない時。 (20sec)	完了返らず、 オリエント動作終わらない。	
223	メカ アンオリエント PRS オン フリョウ	AL-23 (F23) [HC2-7]	オリエントしている時に、UOPRSがオフしない時。 (20sec)		
224	メカ アンオリエント PRS オフ フリョウ	AL-24 (F24) [HC3-0]	アンオリエントした時に、UOPRSがオンしない時。 (20sec)	完了返らず、 アンオリエント動作終了しない。	
225	ツール クランプ PRS オン フリョウ	AL-25 (F25) [HC3-1]	ツールアンクランプしている時に、TCLPRSがオフしていない時。 (5sec)		PRS-9 (X18) [H03-0] 0
226	ツール クランプ PRS オフ フリョウ	AL-26 (F26) [HC3-2]	ツールクランプした時に、TCLPRSがオンしない時。 (5sec)	完了返らず ATC途中ストップ	PRS-9 (X18) [H03-0] 1
227	ツール アンクランプ PRS オン フリョウ	AL-27 (F27) [HC3-3]	ツールクランプしている時に、TUCPRSがオフしない時。 (5sec)		PRS-8 (X19) [H03-1] 0
228	ツール アンクランプ PRS オフ フリョウ	AL-28 (F28) [HC3-4]	ツールアンクランプしている時、TUCPRSがオンしない時。 (5sec)	完了返らず、 ATC途中ストップ	PRS-8 (X19) [H03-1] 1
229	ハイ ギヤ PRS オン フリョウ	AL-29 (F29) [HC3-5]	ローギャ又は、ニュートラルへギャシフトしている時に、HGPRSがオフしない時。 (20sec)		PRS-10 (X58) [H03-0] 0

INDEX NUMBER
SHEET LINE

DRN. BY K.Kaiida DATE 11.15.84
CHK'D BY H.S DATE 11.15

Mazak
YAMAZAKI MAZAK CORPORATION

TITLE VQC-15440 アラーム一覧表 (2)
CONTROL MZV
DRAWING NO. 4240481132
SIZE 3
SHEET LINE
INDEX NUMBER

DRAWING NO. 4240481132
SHEET ____ OF ____

アラーム No	アラーム名称	SQアラームNo SQコイルNo ビットアドレス	内　　容	機械状態	アラーム関連検出器 SQ. No 信号チャックアドレス
230	ハイ ギヤ PRS オフ フリョウ	AL-30 (F30) [HC3-6]	ハイギヤへギヤシフトした時に、HGPRSがオンしない時。(20see)	完了返らず、ギヤシフト途中ストップ	
231	ミドル ギヤ PRS オン フリョウ	AL-31 (F31) [HC3-7]	ハイ ローギヤ又はニュートラルへギヤシフトしている時にMGPRSがオフしない時。(20see)		
232	ミドル ギヤ PRS オフ フリョウ	AL-32 (F32) [HC4-0]	ミドルギヤへギヤシフトした時に、MGPRSがオンしない時。(20see)	完了返らず、ギヤシフト途中ストップ	
233	ニュートラル ギヤ PRS オン フリョウ	AL-33 (F33) [HC4-1]	ハイギヤ又は、ローギヤ(又はミドルギヤ)へギヤシフトしている時に、NEUPRSがオフしない時。(20see)		
234	ニュートラル ギヤ PRS オフ フリョウ	AL-34 (F34) [HC4-2]	ギヤシフト(L→H, H→L)中、又はニュートラルギヤシフトした時に、NEUPRSがオンしない時。(20see)	完了返らず、ギヤシフト途中ストップ	
235	ローギヤ PRS オン フリョウ	AL-35 (F35) [HC4-3]	ハイギヤ又はニュートラル(又はミドルギヤ)へギヤシフトしている時に、LGPRSがオフしない時。(20see)		
236	ローギヤ PRS オフ フリョウ	AL-36 (F36) [HC4-4]	ローギヤへギヤシフトしている時に、LGPRSがオンしない時。(20see)	完了返らず、ギヤシフト途中ストップ	
237	インデックス テーブル クランプ PRS オン フリョウ	AL-37 (F37) [HC4-5]	インデックステーブルがアンクランプしている時に、ITCPRSオフしない時。(10see)	4軸目動かず	LS-77 (X2F) [H05-7] 0
238	インデックス テーブル クランプ PRS オフ フリョウ	AL-38 (F38) [HC4-6]	インデックステーブルをクランプした時に、ITCPRSがオンしない時。(10see)	X, Y, Z軸動かず	LS-77 (X2F) [H05-7] 1
239	パレット クランプ PRS オン フリョウ	AL-39 (F39) [HC4-7]	パレットアンクランプしている時に、PCLPRSがオフしない時。(6see)		PRS-98 (X16) [H02-6] 0
240	パレットクランプ PRS オフ フリョウ	AL-40 (F40) [HC5-0]	パレットクランプした時に、PCLPRSがオンしない時。(6see)	完了返らず、パレットクランプ動作終わらない。	PRS-98 (X16) [H02-6] 1
241	パレット アンクランプ PRS オン フリョウ	AL-41 (F41) [HC5-1]	パレットクランプ時にPUCPRSがオフしない時。(6see)		PRS-99 (X17) [H02-7] 0
242	パレット アンクランプ PRS オフ フリョウ	AL-42 (F42) [HC5-2]	パレットアンクランプ時に、PUCPRSがオンしない時。(6see)	完了返らず、アンクランプ動作終わらない。	PRS-99 (X17) [H02-7] 1
243	シュジク カイテン イジョウ (コントローラ)	AL-43 (F43) [HC5-3]	主軸回転指令及びギヤシフト後、2秒後に零スピード信号がオンしていた時。正常回転時0.1秒以上、零スピード検出時、変速時は5秒間アラーム検出をOFFする。	フィールドホールド	ZS1 (X01) [H00-1] 0

DRAWING NO. 4240481133
SHEET ____ OF ____

INDEX NUMBER
SHEET LINE
DRN. BY
DATE
CHK'D BY
DATE
Mazak
YAMAZAKI MAZAK CORPORATION
TITLE VQC-15/40 アラーム一覧表(3)
CONTROL MZV
DRAWING NO. 4240481133
SHEET ____ OF ____
SIZE 3
SHEET LINE
INDEX NUMBER

アラーム No.	アラーム名称	SQアラーム No. SQコイル No. ビットアドレス	内　　容	機械状態	アラーム関連検出器 SQ. No. 信号チャックアドレス
244	デンキ　オリエント フリョウ　1	AL-44 (F44) [HC5-4]	指令なしで、オリエントアライブが出た。		ORA1 (X03) [H00-3]　0
245	デンキ　オリエント フリョウ　2	AL-45 (F45) [HC5-5]	指令後10秒以内にアライブせず。	中断のまま	ORA1 (X03) [H00-3]　1
246	デンキ　オリエント フリョウ　3	AL-46 (F46) [HC5-6]	オリエントコマンド後、1度オリエントした後にアライブ信号とゼロスピードがともにOFFした時		ORA1　ZS1 (X03)　(X59) [H00-3] 1 [H00-1] 1
247	ギヤ　シフト フリョウ	AL-47 (F47) [HC5-7]	ギヤシフト指令してもギヤシフト完了の確認がとれず、5分以上ギヤシフトの動作をした時。	ギヤシフト中止	
248	ATC　アーム RET/EXT　バルブ オフ　フリョウ	AL-48 (F48) [HC6-0]	アームリトラクトとエクステンド両方のソレノイドバルブがOFFした時。	CRT表示のみ	
249	マガジン　マタ　ハ テーブル　ヨウ モータ　フリョウ	AL-49 (F49) [HC6-1]	マガジン用コントローラーのアラーム。 又はテーブル用モーターのオーバーヒート。	途中停止	
250	アーム　パークド ポジション オン　フリョウ	AL-50 (F50) [HC6-2]	アームがスタンバイあるいは、イクステンドしている時PARKD PRSがオフしない時。(5sec)		
251	スピンドル　モータ アラーム	AL-51 (F51) [HC6-3]	スピンドルコントローラのアラーム		FA (X02) [H00-2]　1
252		AL-52 (F52) [HC6-4]			
253	モータ　サーマル トリップ　マシン ヒューズ　アラーム	AL-53 (F53) [HC6-5]	モータ　サーマル(OL)トリップ プロテクタートリップ		OL-HPM, OL-HOM OL-CM, OL-CCM CB-6, CB-7 (X73) [H0E-3]　0
254	ウェイ　リューベ アラーム	AL-54 (F54) [HC6-6]	スライドウェイ潤滑油面低下アラーム	シングルブロック停止	PS-40 (X7A) [H0F-2]　0
255	マシン　ドア インターロック アラーム	AL-55 (F55) [HC6-7]	自動運転中にマシンドアが開いた時。	フィードホールド スピンドル　ストップ	LS-141 (X1C) [H03-4]　1
256	ヘッド　リューベ アラーム	AL-56 (F56) [HC7-0]	・主軸潤滑油面低下のアラーム ・チラーユニットのアラーム (オプション)	シングルブロック 60秒後にスピンドル停止	PS-5 (X79) [H0F-7]　0
257	メイントランス オーバーヒート	AL-57 (F57) [HC7-1]	メインパワートランスの過熱120℃以上になった時、又は盤内温度が55℃以上になった時。		メイントランス (X7B) [H0F-3]　0
258	HD　ドライブ アラーム (マガジン)	AL-58 (F58) [HC7-2]	HDコントローラーのアラーム		
259	PS　ドライブ アラーム (インデックス)	AL-59 (F59) [HC7-3]	PSモータのオーバーヒート		

DRAWING NO. 4240481134
SHEET ____ OF ____

INDEX NUMBER
SHEET　LINE

DRN. BY Kikuchi DATE Oct. 18. '84
CHK'D BY HS DATE 4-4-85

Mazak
YAMAZAKI MAZAK CORPORATION

TITLE VBC-15/40 アラーム一覧表(4)

CONTROL MZV
DRAWING NO. 4240481134
SHEET ____ OF ____
SIZE 3

SHEET　LINE
INDEX NUMBER

アラーム No	アラーム名称	SQアラームNo SQコイルNo ビットアドレス	内　容	機械状態	アラーム関連検出器 SQ. No 信号チャックアドレス
260	イクスターナル コントロール アラーム	AL-60 (F60) [HC7-4]	外部コントローラー装置 (シーケンサー)からのアラーム		
261	コウグ ソクチョウ アームダシ RS オン フリョウ	AL-61 (F61) [HC7-5]	アームが戻ってもアーム出しRS がオフしない時。 (5see)		RS-142 (X26) [H04-6] 0
262	コウグ ソクチョウ アームダシ RS オフ フリョウ	AL-62 (F62) [HC7-6]	アームが出てもアーム出しRS がオンしない時。 (5see)		RS-142 (X26) [H04-6] 1
263	コウグ ソクチョウ アームモドシ RS オン フリョウ	AL-63 (F63) [HC7-7]	アームが出てもアーム戻しRS がオフしない時。 (5see)		RS-143 (X27) [H04-7] 0
264	コウグ ソクチョウ アーム モドシ RS オフ フリョウ	AL-64 (F64) [HC8-0]	アームが戻ってもアーム戻しRS がオンしない時。 (5see)		RS-143 (X27) [H04-7] 1
265	MMS アラーム	AL-65 (F65) [HC8-1]	MMSユニットに何らかの障害が あり必要な信号が出されなかった 時。		MMSPON (X60) [H0C-0] 1 MMS-RDY (X61) [H0C-1] 0 SENRDY (X62) [H0C-2] 0 MMS-ST (X63) [H0C-3] 1
266	スウイング アーム SOL ドウジ オフ アラーム	AL-66 (F66) [HC8-2]	スウイングアームマガジン側と スピンドル側のソレノイドが 同時にオフの時。		
267	ミドルロー ギヤ PRS オン フリョウ	AL-67 (F67) [HC8-3]	ミドルハイ及びローギヤに ギヤシフトした時OFFしない 場合。		
268	ミドルローギヤ PRS オフ フリョウ	AL-68 (F68) [HC8-4]	ミドルハイ及びローギヤに ギヤシフトした時、ONしない 場合。		
269	パレット ドア アラーム	AL-69 (F69) [HC8-5]	パレットドアの開閉動作に 異常がある時。		RS-96 (X10) [H02-0] RS-97 (X11) [H02-1]
270	パレット チェンジャー アラーム	AL-70 (F70) [HC8-6]	パレットチェンジ動作に異常が ある時。		[HBF] 0
271	マガジン カバー クローズ RS オン フリョウ	AL-71 (F71) [HC8-7]	マガジンカバーが開いているのに MGCCRSがOFFしない時。 (5see)		RS-19 (X53) [H0A-3] 0
272	マガジン カバー クローズ RS オフ フリョウ	AL-72 (F72) [HC9-0]	マガジンカバーが閉じているのに MGCCRSがONしない時。 (5see)		RS-19 (X53) [H0A-3] 1
273	マガジン カバー オープン RS オン フリョウ	AL-73 (F73) [HC9-1]	マガジンカバーが閉じているのに MGCORSがOFFしない時。 (5see)		RS-18 (X52) [H0A-2] 0
274	マガジン カバー オープン RS オフ フリョウ	AL-74 (F74) [HC9-2]	マガジンカバーが開いているのに MGCORSがONしない時。 (5see)		RS-18 (X52) [H0A-2] 1
275	スピンドル ツール デテクタ OFF	AL-65 (F75) [HC9-3]	スピンドルツール数が"0"に セットされているのにツールロード の過程でスピンドル内にツールを 感知した。	表示のみ	PRS-182 (X5B) [H0B-3] 1

DRAWING NO. 4240481135
SHEET ___ OF ___

INDEX NUMBER
SHEET LINE
DRN. BY
DATE
CHK'D BY
DATE
Mazak
YAMAZAKI MAZAK CORPORATION
TITLE VBC/S/40 アラーム一覧表(5)
CONTROL MZV
DRAWING NO. 4240481135
SHEET ___ OF ___
SIZE 3
SHEET LINE
INDEX NUMBER

アラーム No	アラーム名称	SQアラームNo SQコイルNo ビットアドレス	内　容	機械状態	アラーム関連検出器 SQ. No 信号チャックアドレス
276	マガジン ツール デテクタ OFF	AL-76 (F76) [HC9-4]	ツールアンロードの過程に於いてツールを返すべきポケットにツールが存在するのを感知した。	表示のみ	PHS-181 (X05) [H00-5] 1
277	工具寿命オーバー	AL-77 (F77) [HC9-5]	工具の累積使用時間がその工具の寿命時間を超えた。	①シングルブロック停止。(M58使用時) ②表示のみ。	CRT画面がピンク色に反転
278	工具折損検出	AL-78 (F78) [HC9-6]	・M35指令により、工具折損を検出した。 ・折損している工具をロードした。	①シングルブロック停止。 ②エンドへジャンプ ③①+②	CRT画面が赤色に反転

INDEX NUMBER
SHEET LINE
DRN. BY Kikuchi DATE 84.12.14
CHK'D BY HS DATE
Mazak YAMAZAKI MAZAK CORPORATION
TITLE WOC-15/40 アラーム一覧表 (6)
CONTROL MZV
DRAWING NO. 4240481136
SIZE 3
DRAWING NO. 4240431136
SHEET OF

NO.	ミスオペレーション名称	SQミスオペNO. SQコイルNO. ビットアドレス	ミスオペレーション 内容	解除方法
280	ツールアンクランプミスオペレーション	MOP-1 (F-80) (HCA-0)	1.オートモード 2.SJOGを押している時 3.主軸回転P.Bを押している時 4.オリエント状態でない時 以上の状態の時にツール.アンクランプスイッチをONさせた場合	ツールアンクランプ.スイッチをOFFした後フィード.ホールド.スイッチをONする.リセットも有効
281	スピンドルスタートミスオペレーション	MOP-2 (F-81) (HCA-1)	ニュートラル.ギヤでスピンドル.スタート指令を行った場合 (VQC, HQCはなし)	フィード.ホールド.スイッチをONする.リセットも有効.
282		MOP-3 (F-82) (HCA-2)		
283	ツールチェンジミスオペレーション	MOP-4 (F-83) (HCA-3)	手動にてツールチェンジを行う時に. Z軸が原点にない時(Vシリーズ) Y軸が原点にない時(Hシリーズ)	フィード.ホールドスイッチをONする.リセットも有効.
284		MOP-5 (F-84) (HCA-4)		
285	トクシュツールミスオペレーション	MOP-6 (F-85) (HCA-5)	特殊ツールが入っている時に.スピンドル.スタートを押した場合.	フィード.ホールドスイッチをONする.リセットも有効.
286	パレットチェンジミスオペレーション	MOP-7 (F-86) (HCA-6)	パレット交換の条件(パレット旋回位置.パレットシリンダ1.2戻り.パレットキャリアにパレット1,2有り)がそろっていない時交換指令した.	リセットを行う.
287	ゲンテンフッキミスオペレーション	MOP-8 (F-87) (HCA-7)	電源投入後,又は非常停止後,全軸原点復帰していないのにSTL P.Bを押した時.	全軸原点復帰を行う.
288	ショキプラスホウコウミスオペレーション	MOP-9 (F-88) (HCB-0)	電源投入後,又は非常停止後マイナス方向へ一度も動かさないのにプラス方向へ動作させた時(VQC.HQCのみ)	フィードホールド.スイッチをONする.リセットも有効.
289	インデックスシレイミスオペレーション	MOP-10 (F-89) (HCB-1)	5°インデックス仕様なのに.5°毎以外の指令を行った時 (Hシリーズ)	フィードホールド.スイッチをONする.リセットも有効.
290		MOP-11 (F-90) (HCB-2)		
291	ツールインタロックミスオペレーション	MOP-12 (F-91) (HCB-3)	オート.モードでツール.セレクト.インタロックがONしているのに,ツール・セレクト指令を行った時.	フィードホールド.スイッチをONする.リセットも有効.
292	ツールセレクトミスオペレーション	MOP-13 (F-92) (HCB-4)	1.0ポケットがある場合で,今回ツールが0,スピンドル内ツールが0の指令を行った. 2.0ポケットがない場合で,マガジン選択時にT0を指定した時. 3.センサ検出のマガジン・タイプでマガジンより大きい指令をした時.	フィード.ホールド.スイッチをONする.リセットも有効.

DRAWING NO. 4240481137
SHEET ___ OF ___

INDEX NUMBER
SHEET LINE
DRN. BY Kitabata DATE 61.11.24
CHK'D BY THS DATE May 1 '85
Mazak YAMAZAKI MAZAK CORPORATION
TITLE VQC/S/HQC アラーム一覧表(7) (ミスオペレーション)
CONTROL DRAWING NO. MZV 4240481137 SHEET ___ OF ___
SIZE 3

ALARM TABLE

1. The method of using this table

The alarm messages are indicated on the lower left of CRT screen with alarm numbers and announcing comments. The alarm numbers are set for announcement within a range of 200 to 299. In addition, the displayed messages are lined from left to right-side of table, that is, alarm numbers through alarm names orderly. Next to the alarm name column comes the address column to indicate numbers and addresses for checking up the troubles occured. The upper line of column AL-xx is used to mean the alarm names in terms of sequence control cicuitry, the middle line Fxx is used to mean the relay coil in sequence control circuit and the lowest one Hxx-x is used to mean the address number to be used for diagnosis. Next, alarm contents are explained with the machine status upon trouble occurence. On the far right of the table comes sequence number of associated devices such as detector traceable to troubles and the P.C. sequence symbole signals for 1 or 0 and the corresponding addresses. On the far right end is the figure displaying the normal status bit using 1 or 0.

Example :

Alarm No.	Alarm name	SQ Alarm No. SQ. Coil No. Bit address	Contents	Machine movements	Alarm sensor SQ No. Check address
201	Hydraulic pressure too low	AL-1 (F1) "HCO-1"	Insufficient hydraulic pressure for more than 2 sec.	Feed hold spindle stop after 1 min.	PS-1 (x 78) "HOF-0" 1

Display on the lower left of CRT screen

means that alarm will be displayed when the status of content shown here continues more than (xx seconds)

AL-1 - - Alarm name in sequence circuit
(F1) - - Relay coin in sequence circuit
HCO-1 - - (F1) address

Index — Bit No. (0 - 7)
Adress No.

PS-1 - - Detector
(x78) - - Symbole signal in P.C.sequence circuit
"HOF-0" - - (x78) address
"HOF-0" - - is 1 at a normal status

2. The method of checking the diagnosis screen

Select the diagnosis screen by using [DISPLAY SELECT] and [DIAGNOS.] keys. Stop the cursor at the position H on the screen by using the cursor keys, [←] [→] [↑] [↓]
The H is positioned on the left of screen. By using the alphanumeric keys, depress the address No. of H subject to check-up and depress the [INPUT] Key.
(Example: For HCO-1, depress in order [C] [O], [INPUT] keys. With the above procedures all done completely, the screen will display at the position H signal status using 0 or 1. The signal status 0 means signal OFF and 1 means signal ON.)

Example :

The figure right shows that HCO-1 is "OFF" status becomes 0 is displayed, or that HCO-0 is "ON" with 1 being displays.

```
I/O CHECK
        7654 3210
HCO     0000 0001
 C1     0000 0000
 C2     0000 0000
 C3     0000 0000

H
```

INDEX NUMBER
SHEET LINE
DRN. BY
DATE
CHK'D BY
DATE
Mazak
YAMAZAKI MAZAK CORPORATION
TITLE VQC-15/40
The method of using ALARM TABLE
CONTROL MZY
DRAWING NO. 4240481140
SHEET ___ OF ___
SIZE 3
SHEET LINE
INDEX NUMBER
DRAWING NO. 4240481140
SHEET ___ OF ___

Alarm No.	Alarm name	SQ Alarm No. SQ. Coil No. Bit Address	Contents	Machine movements	Alarm sensor SQ No. Check address
201	HYDRAULIC PRESSURE TOO LOW	AL-1 (F1) "HCO-1"	Insufficient hydraulic pressure for more than 2 sec.	Feed Hold Spindle stops after 1 min.	PS-1 (X78) [H0F-0] 1
202	DRUM INDEX PROX OFF MALF.	AL-2 (F2) "HCO-2"	If Tool Load/Unload command is assigned during the OFF state of magazine inposition PRS, an alarm will be obtained. Reverse is also the same.	Load/Unload is not possible.	PRS-13 (X0D) [H01-5] 0
203	ARM 0° PROX ON MALF.	AL-3 (F3) "HCO-3"	When the arm 0° PRS is not turned OFF even after the arm swinging of 45°. (5 sec.)	Display only.	
204	ARM 0° PROX OFF MALF.	AL-4 (F4) "HCO-4"	When the arm 0° PRS is not turned ON even after the arm returns to 0°. (5 sec.)	ATC does not return perfectly and finish signal does not come.	
205	ARM 45° PROX ON MALF.	AL-5 (F5) "HCO-5"	When the arm 45° PRS is not turned OFF even after the arm returns to 0°. (5 sec.)	Display only.	
206	ARM 45° PROX OFF MALF.	AL-6 (F6) "HCO-6"	When the arm 45° PRS is not turned ON even after the arm swinging of 45°. (5 sec.)	ATC does not return perfectly and finish signal does not come.	
207	ARM 0° PROX ON MALF.	AL-7 (F7) "HCO-7"	When the arm 0° (180°) PRS is not not turned OFF after the arm swinging to 180°. (5 sec.)	Display only	
208	ARM 0° PROX OFF MALF.	AL-8 (F8) "HC1-0"	When the arm 0° (180°) PRS is not turned ON after the arm returns to 0°. (5 sec.)	ATC does not return perfectly and finish signal does not come.	
209	ARM 180° PROX ON MALF.	AL-9 (F9) "HC1-1"	When the arm 180° PRS is not turned OFF after the arm returns to 0°. (5 sec.)	Display only.	
210	ARM 180° PROX OFF MALF.	AL-10 (F10) "HC1-2"	When the arm 180° PRS is not turned ON after the arm swinging to 180°. (5 sec.)	ATC does not return perfectly and finish signal does not come.	
211	ARM REVERSE PROX ON, OFF MALF.	AL-11 (F11) "HC1-3"	When the REVPRS does not change even if the arm is in the retracted position. (sec.)	ATC does not return perfectly and finish signal does not come.	
212		AL-12 (F12) "HC1-4"			
213	AMR RETRACT PROX ON MALF.	AL-13 (F13) "HC1-5"	When the ARETPRS is not turned OFF even if the arm is at the extended end.		

DRAWING NO. 4240431141 SHEET ___ OF ___

DRN. BY K.Kawa
DATE Oct.18.'94
CHK'D BY H.S
DATE

Mazak

TITLE VQC-15/40 ALARM TABLE (1)

CONTROL MZV
DRAWING NO. 4240481141
SIZE 3

Alarm No.	Alarm name	SQ Alarm No. SQ. Coil No. Bit Address	Contents	Machine movements	Alarm sensor SQ No. Check address
214	ARM RETRACT PROX OFF MALF.	AL-14 (F14) "HC1-6"	When the ARETPRS is not turned ON even if the arm is at retract. (IN) (5 sec.)	ATC does not return perfectly and finish signal does not come.	
215	ARM EXTEND PROX ON MALF.	AL-15 (F15) "HC1-7"	When the AEXTPRS is not turned OFF even if the arm is at retract. (IN) (5 sec.)		
216	ARM EXTEND PORX OFF MALF.	AL-16 (F16) "HC2-0"	When the AEXTPRS is not turned ON even if the arm is at extend (OUT) (5 sec.)	ATC does not return perfectly and finish signal does not come.	
217	TOOL LOAD PROX ON MALF.	FL-17 (F17) "HC2-1"	When the TLPRS is not turned OFF even if shifter is in unload end. (5 sec.)		
218	TOOL LOAD PROX OFF MALF.	AL-18 (F18) "HC2-2"	When the TLPRS is not turned ON even if the shifter is loaded. (12 sec.)	Loading operation is not completed.	
219	TOOL UNLOAD PROX ON MALF.	AL-19 (F19) "HC2-3"	When the TUPRS is not turned OFF even if the shifter is in the load end. (12 sec.)		
220	TOOL UNLOAD PROX OFF MALF.	AL-20 (F20) "HC2-4"	When the TUPRS is not turned ON even if the shifter is in unload position. (12 sec.)	Unloading operation is not completed.	
221	SPINDLE ORIENT PROX ON MALF.	AL-21 (F21) "HC2-5"	When the ORPRS is not turned OFF during unorientation. (12 sec.)		
222	SPINDLE ORIENT PROX OFF MALF.	AC-22 (F22) "HC2-6"	When the ORPRS is not turned ON during orientation. (20 sec.)	Orientation is not completed.	
223	ORIENT PIN RET PROX ON MALF.	AL-23 (F23) "HC2-7"	When the UOPRS is not turned OFF during orientation. (20 sec.)		
224	ORIENT PIN RET PROX OFF MALF.	AL-24 (F24) "HC3-0"	When the UOPRS is not turned ON during unorientation. (20 sec.)	Unorientation is not completed.	
225	TOOL CLAMP PROX ON MALF.	AL-25 (F25) "HC3-1"	When the TCLPRS is not turned OFF during tool unclamping. (5 sec.)		PRS-9 (X18) (H03-0) 0
226	TOOL CLAMP PROX OFF MALF.	AL-26 (F26) "HC3-2"	When the TCLPRS is not turned ON during tool clamping. (5 sec.)	ATC operation is not completed.	PRS-9 (X18) (H03-0) 1

DRAWING NO. 4240481142 SHEET 1 OF

DRN. BY Khulsa
DATE Oct-19-94
CHK'D BY H.S
DATE

Mazak
YAMAZAKI MAZAK CORPORATION

TITLE VQC-15/40
ALARM TABLE (2)

CONTROL MZV
DRAWING NO. 4240481142
SHEET — OF —
SIZE 3

Alarm No.	Alarm name	SQ Alarm No. SQ. Coil No. Bit Address	Contents	Machine movements	Alarm sensor SQ No. Check address
227	TOOL UNCLAMP PROX ON MALF.	AL-27 (F27) "HC3-3"	When the TUCPRS is not turned OFF during tool clamping. (5 sec.)		PRS-8 (X19) (H03-1] 0
228	TOOL UNCLAMP PROX OFF MALF.	AL-28 (F28) "HC3-4"	When the TUCPRS is not turned ON during tool clamping. (5 sec.)	ATC does not return perfectly and finish signal does not come.	PRS-8 (X19) (H03-1] 1
229	HIGH GEAR PROX ON MALF.	AL-29 (F29) "HC3-5"	Whent the HGPRS is not turned OFF during Low gear or neutral gear shifting. (20 sec.)		
230	HIGH GEAR PROX OFF MALF.	AL-30 (F30) "HC3-6"	When the HGPRS is not turned ON during high gear shifting. (20 sec.)	Gear shifting is not completed.	
231	MIDDLE GEAR PROX ON MALF.	AL-31 (F31) "HC3-7"	When the MGPRS is not turned OFF during high, low or neutral gear shifting. (20 sec.)		
232	MIDDLE GEAR PROX OFF MALF.	AL-32 (F32) "HC4-0"	When the MGPRS is not turned ON during middle gear shifting. (20 sec.)	Gear shifting is not completed.	
233	NEUTRAL GEAR PROX ON MALF.	AL-33 (F33) "HC4-1"	When the NEUPRS is not turned OFF during high gear or low gear (or middle gear) shiftig. (20 sec.)		
234	NEUTRAL GEAR PROX OFF MALF.	AL-34 (F34) "HC4-2"	When the NEUPRS is not turned ON during gear shifting (L-H, H-L) or during neutral gear shifting. (20 sec.)	Gear shifting is not completed.	
235	LOW GEAR PROX ON MALF.	AL-35 (F35) "HC4-3"	When the LGPRS is not turned OFF during high gear or neutral gear (or middle gear) shifting. (20 sec.)		
236	LOW GEAR PROX OFF MALF.	AL-36 (F36) "HC-4-4"	When the LGPRS is not turned ON during low gear shifting. (20 sec.)	Gear shifting is not completed.	
237	IND TABLE CLAMP PROX ON MALF.	AL-37 (F37) "HC4-5"	When the ITCPRS is not turned OFF during index table unclamping. (10 sec.)		LS-77 (X2F) (H05-7] 0
238	IND TABLE CLAMP PROX OFF MALF.	AL-38 (F38) "HC4-6"	When the ITCPRS is not turned ON during index table clamping. (10 sec.)	Stops after table rotation and no end signal is not completed.	LS-77 (X2F) (H05-7] 1
239	PALLET CLAMP PROX ON MALF.	AL-39 (F39) "HC4-7"	When the PCLPRS is not turned OFF during pallet unclamping. (10 sec.)		PRS-98 (X16) (H02-6] 0

DRAWING NO. 4240481143 - SHEET ___ OF ___

DRN. BY K.Ishiguro
DATE Oct.18.89
CHK'D BY H.S
DATE

Mazak
YAMAZAKI MAZAK CORPORATION

TITLE VQC-15/40
ALARM TABLE (3)

CONTROL MZV
DRAWING NO. 4240481143
SIZE 3

Alarm No.	Alarm name	SQ Alarm No. SQ. Coil No. Bit Address	Contents	Machine movements	Alarm sensor SQ No. Check address
240	PALLET CLAMP PROX OFF MALF.	AL-40 (F40) "HC5-0"	When the PCLPRS is not turned ON during pallet clamping. (10 sec.)	Pallet clamping operation is not completed.	PRS-98 (X16) (H02-6) 1
241	PALLET UNCLAMP PROX ON MALF.	AL-41 (F41) "HC5-1"	When the PUCPRS is not turned OFF during pallet clamping. (20 sec.)		PRS-99 (X17) (H02-7) 0
242	PALLET UNCLAMP PROX OFF MALF.	AL-42 (F42) "HC5-2"	When the PUCPRS is not turned ON during pallet unclamping. (20 sec.)	Pallet unclamping operation is not completed.	PRS-99 (X17) (H02-7) 1
243	SPINDLE R. P. M. MALF.	AL-43 (F43) "HC5-3"	When the zero speed signal is turned ON after 2 sec. of spindle speed command or gear shifting. Spindle zero speed signal is on for more than 0.1 sec. when the spindle is normally revoluting. Detecting the alarm is restricted for 5 sec. when the gear is being changed.	FEED HOLD	ZS1 (X01) (H00-1) 0
244	ORIENT MALF. 1	AL-44 (F44) "HC5-4"	Orientation arrival is obtained without command.		ORA1 (X03) (H00-3) 0
245	ORIENT MALF. 2	AL-45 (F45) "HC5-5"	No arrival after 10 sec. of command.	Discontinued	ORA1 (X03) (H00-3) 1
246	ORIENT MALF. 3	AL-46 (F46) "HC5-6"	When both arrive signal and zero speed are OFF after the orientation is once completed.		ORA1 (X03) (H00-3) 1 ZS1 (X59) (H00-1) 1
247	GEAR SHIFT MALF.	AL-47 (F47) "HC5-7"	Gearshift confirmation will not be on although gearshift command is done and gearshift for more than 5 minutes.	Gearshifting stops.	
248	ATC ARM VALVE OFF MALF.	AL-48 (F48) "HC6-0"	Two valves for the arm extend and retract remains off at the normal condition.	Arm stops on the way.	
249	DRUM OR TABLE MOTOR MALF.	AL-49 (F49) "HC6-1"	The motor for the magazine has a problem.	The magazine revolution is stopped. Machine stops by single blocks.	
250	AMR HOME POSIT. PROX ON MALF.	AL-50 (F50) "HC6-2"	When the arm parked position PRS is not turned OFF even after the arm is extended fully or extended to the stand-by position. (When this remains for more than 5 seconds.)		
251	SPINDLE MOTOR CONTROLLER MALF.	AL-51 (F51) "HC6-3"	Spindle controller alarm.		FA (X02) (H00-2) 1

DRAWING NO. 4240481144 SHEET ___ OF ___

DRN. BY K. Ishizaka
DATE 6.1.18.'84
CHK'D BY H.S
DATE Nov. 3.'83

Mazak
YAMAZAKI MAZAK CORPORATION

TITLE VDC-15/40
ALARM TABLE (4)

CONTROL MZV
DRAWING NO. 4240481144
SHEET 3

Alarm No.	Alarm name	SQ Alarm No. SQ. Coil No. Bit Address	Contents	Machine movements	Alarm sensor SQ No. Check address
252		AL-52 (F52) "HC6-4"			
253	MOTOR TERMAL TRIP MACHINE FUSE ALARM	AL-53 (F53) "HC6-5"	Motor thermal (OL) trip protector trip.		OL-HPM, OL-HOM, OL-CM OL-CCM, CB-6, CB-7 (X73) [HOE-3] 0
254	LUBRICATION MALF.	AL-54 (F54) "HC6-6"	Spindle way lubrication oil is too little.	SINGLE BLOCK STOP.	PS-40 (X7A) [HOF-2] 0
255	MACHINE DOOR INTERLOCK MALF.	AL-55 (F55) "HC6-7"	When the machine door is opened during the machine is AUTO mode drive.	FEED HOLD SPINDLE STOP.	LS-141 (X1C) [H03-4] 1
256	HEAD LUBRICATION ALARM	AL-56 (F56) "HC7-0"	After 60 sec.	SINGLE BLOCK STOP.	PS-5 (X79) [HOF-1] 0
257	MAIN TRANSFORMER OVER HEAT.	AL-57 (F57) "HC7-1"	Main power transf. is overheat over 120°C. Or temperature of electrical cabinet is more than 55°C.		MAIN TRNSF. (X7B) [HOF-3] 0
258	HD DRIVE MALF.	AL-58 (F58) "HC7-2"	HD controller alarm.		
259	PS DRIVE MALF.	AL-59 (F59) "HC7-3"	PS motor over heat.		
260		AL-60 (F60) "HC7-4"	External controller alarm		
261	T-MEAS. STAND OUT RS ON MALF.	AL-61 (F61) "HC7-5"	When the measuring arm extend RS is not turned OFF even if the arm is retract position. (5 sec.)		RS-142 (X26) [H04-6] 0
262	T-MEAS. STAND OUT RS OFF MALF.	AL-62 (F62) "HC7-6"	When the measuring arm extend RS is not turned ON even if the arm is extend position. (5 sec.)		RS-142 (X26) [H04-6] 1
263	T-MEAS. STAND IN RS ON MALF.	AL-63 (F63) "HC7-7"	When the measuring arm retract RS is not turned OFF even if the arm is extend posiiton. (5 sec.)		RS-143 (X27) [H04-7] 0
264	T-MEAS. STAND IN RS OFF MALF.	AL-64 (F64) "HC8-0"	When the measuring arm retract RS is not turned ON even if the arm is retract position. (5 sec.)		RS-143 (X27) [H04-7] 1

DRAWING NO. 4240451145 SHEET ___ OF ___

DRN. BY K. Ichiura
DATE 6.18.94
CHK'D BY H.S.
DATE

Mazak
MAZAK CORPORATION

TITLE VQC-15/40
ALARM TABLE (5)

CONTROL M2V
DRAWING NO. 4240481145
SIZE 3

Alarm No.	Alarm name	SQ Alarm No. SQ. Coll No. Bit Address	Contents	Machine movements	Alarm sensor SQ No. Check address
265	MMS MALF.	AL-65 (F-65) "HC8-1"	When signals aren't out for there is something wrong with MMS unit.		MMSPON (X60) [HOC-0] 1 / MMS RDY (X61) [HOC-1] 0 / SEN RDY (X62) [HOC-2] 0 / MMS ST (X63) [HOC-3] 1
266	SWING ARM SOL. SIMULTANEOUS ON	AL-66 (F66) "HC8-2"	When swing arm solenolds of magazine side and spindle side are off at same time.		
267	MIDDLE LOW GEAR PROX ON MALF.	AL-67 (F67) "HC8-3"	When the MLPRS is not turned OFF except middle high and low gear shifting. (sec.)		
268	MIDDLE LOW GEAR PROX OFF MALF.	AL-68 (F68) "HC8-4"	When the MLPRS is not turned ON during middle high gear or low gear shifting. (sec.)		
269	PALLET DOOR ALARM	AL-69 (F69) "HC8-5"	When there is something wrong with door open and close.		RS-96 (X10) [HO2-0] / RS-97 (X11) [HO2-1]
270	PALLET CHANGER ALARM	AL-70 (F70) "HC8-6"	When there is something wrong with pallet changer.		[HBF] 0
271	MAGZN CVR CLOSE RS ON MALF.	AL-71 (F71) "HC8-7"	When the MGCCRS is not turned OFF even if the magazine cover is closed. (5 sec.)		RS-19 (X53) [HOA-3] 0
272	MAGZN CVR CLOSE RS OFF MALF.	AL-72 (F72) "HC9-0"	When the MGCCRS is not turned ON even if the magazine cover is closed. (5 sec.)		RS-19 (X53) [HOA-3] 1
273	MAGZN CVR OPEN RS ON MALF.	AL-73 (F73) "HC9-1"	When the MGCORS is not turned OFF even if the magazine cover is closed. (5 sec.)		RS-18 (X52) [HOA-2] 0
274	MAGZN CVR OPEN RS OFF MALF.	AL-74 (F74) "HC9-2"	When the MGCORS is not turned ON even if the magazine cover is opened. (5 sec.)		RS-18 (X52) [HOA-2] 1
275	SPINDLE TOOL DETECTOR OFF	AL-75 (F75) "HC9-3"			PRS-182 (X5B) [HOB-3] 1
276	MAGAZINE TOOL DETECTOR OFF	AL-76 (F76) "HC9-4"			PHS-181 (X05) [HOO-5] 1
277	TOOL LIFE OVER (FHPB)	AL-77 (F77) "HC9-5"			CRT "TOOL DATA"
278	TOOL BREAKAGE (FHPB)	AL-78 (F78) "HC9-6"			CRT "TOOL DATA"

DRAWING NO. 4240481146 SHEET. OF.

DRN. BY K.Shiraga DATE Oct.18.'84 CHK'D BY H.S DATE Nov 3.'85

Mazak YAMAZAKI MAZAK CORPORATION

TITLE VQC-15/40 ALARM TABLE (6)

CONTROL MZV DRAWING NO. 4240481146 SHEET. OF. SIZE 3

NO.	MISS OPERATION NAME	SQ. MOP. NO. SQ.COIL. NO. BIT.ADDRESS	CONTENTS	THE WAY TO RELEASE.
280	TOOL UNCLAMP MISS OPER.	MOP-1 (F-80) (HCA-0)	1. AUTO MODE 2. SJOG switch is on. 3. Spindle start P.B. is on. 4. Spindle isn't in orient. In above status tool unclamp switch is on.	Push the feed hold button or the reset button after turning off the tool clamp switch.
281	SPINDLE START MISS OPER.	MOP-2 (F-81) (HCA-1)	The spindle start is commanded, when the gear is neutral.	
282		MOP-3 (F-82) (HCA-2)		
283	TOOL CHANGE MISS OPER.	MOP-4 (F-83) (HCA-3)	Manual tool change is commanded, although the Z axis is not home positioned (V series) Although the Y axis is not home positioned (H series)	
284		MOP-5 (F-84) (HCA-4)		
285	SPECIAL TOOL MISS OPER.	MOP-6 (F-85) (HCA-5)	The spindle start is commanded, although spindle is set special tool.	Push the feed hold button or reset button.
286	PALLET CHANGE MISS OPER.	MOP-7 (F-86) (HCA-6)	1. M61 (M62) is commanded in spite of no No.2 (No.1) pallet at the X axis reference position 2 M61 (M62) is commanded in spite of no No.1 (No.2) pallet at the X axis reference position.	

DRAWING NO. 4240175147 SHEET: ___ OF: ___

DRN. BY [illegible] DATE Oct. 18. 3[illegible] CHK'D BY HS DATE [illegible]

Mazak YAMAZAKI MAZAK CORPORATION

TITLE VQC-15/40 TABLE OF ALARM (7)

CONTROL MZV DRAWING NO. 4240481147 SHEET ___ OF ___ SIZE 3

NO.	MISS OPERATION NAME	SQ.MOP.NO SQ.COIL.NO BIT ADDRESS	CONTENTS	THE WAY TO RELEASE
287	ZERO RETURN MISS OPER.	MOP-8 (F-87) (HCA-7)	After power on or emergency stop. STL P.B. is turned on before all axis Zero return.	Return all axis Zero position.
288	PLUS MOTION MISS OPER.	MOP-9 (F-88) (HCB-0)	After power on or emergency stop. plus motion commanded before minus motion command. (VQC. HQC)	Push the feed hold button or reset button.
289	INDEX COMMAND MISS OPER.	MOP-10 (F-89) (HCB-1)	The last order of indexing command has a number (figure) except for 0 or 5 although the machine has 5° indexing specification.	Push the feed hold button or reset button.
290		MOP-11 (F-90) (HCB-2)		
291	TOOL INTERLOCK MISS OPER.	MOP-12 (F-91) (HCB-3)	Tool select is commanded although tool select interlock is on at auto mode.	Push the feedhold button or reset button.
292	TOOL SELECT MISS OPER.	MOP-13 (F-92) (HCB-4)	1. Magazine has No.0 pocket then T0 and spindle tool 0 is commanded. 2. Magazine doesn't have No.0 pocket. Then T.0 is commanded. 3. Magazine is sensor detect type. Then selected pocket No. is too big.	Push the feed hold button or reset button.

DRAWING NO. 4210481148 SHEET ___ OF ___

DRN. BY K.Miura DATE Oct.18.'84 CHK'D BY H.S DATE Nov.3.'84

Mazak YAMAZAKI MAZAK CORPORATION

TITLE VQC-15/40 TABLE OF ALARM (8)

CONTROL M2V DRAWING NO. 4210481148 SHEET ___ OF ___ SIZE 3

H 000			H 001			H 002			H 003		
bit	SYMBOL	CONTENT	bit	SYMBOL	CONTENT	bit	SYMBOL	CONTENT	bit	SYMBOL	CONTENT
0	X000*	*ESP.M	0	X008	T11P.M	0	X010	PDCRS	0	X018	TCPRS
1	X001	SZS.M	1	X009	T12P.M	1	X011	PDORS	1	X019	TUCPRS
2	X002	FA	2	X00A	T14P.M	2	X012	PLPRS	2	X01A	TUCSW
3	X003	ORA1	3	X00B	T18P.M	3	X013	PULPRS	3	X01B	
4	X004		4	X00C	T21P.M	4	X014	PON1PRS	4	X01C	MDINT.M
5	X005	MGTDPRS	5	X00D	MIPRS	5	X015	PON2PRS	5	X01D	ITMDSS.M
6	X006	PCY1PB	6	X00E	PS1LS	6	X016	PCLPRS	6	X01E	EXRST.M
7	X007	TSPB	7	X00F	PS2LS	7	X017	PUCPRS	7	X01F	EXFIN

H 004			H 005		—	H 006			H 007		
bit	SYMBOL	CONTENT	bit	SYMBOL	CONTENT	bit	SYMBOL	CONTENT	bit	SYMBOL	CONTENT
0	X020*	*+LX	0	X028*	*DECX.M	0	X030	INTX.M	0	X038	ECST.M
1	X021*	*-LX	1	X029*	*DECY.M	1	X031	INTY.M	1	X039	EFHD.M
2	X022*	*+LY	2	X02A*	*DECZ.M	2	X032	INTZ.M	2	X03A	ESBK.M
3	X023*	*-LY	3	X02B	PCY2PB	3	X033	INT4.M	3	X03B	ECOLEN.M
4	X024*	*+LZ	4	X02C	PDOSS	4	X034	RCTLS	4	X03C	
5	X025*	*-LZ	5	X02D	ENPCSS	5	X035	EMOP1	5	X03D	PSISS
6	X026	AEXTRS	6	X02E		6	X036	EXAL.M	6	X03E*	SKIP0.M
7	X027	ARETRS	7	X02F	INHRLS	7	X037	PS2SS	7	X03F*	SKIP1.M

H 008			H 009			H 00A			H 00B		
bit	SYMBOL	CONTENT	bit	SYMBOL	CONTENT	bit	SYMBOL	CONTENT	bit	SYMBOL	CONTENT
0	X040	PON1.M	0	X048	PLSS	0	X050	PCLSS	0	X058	
1	X041	PON2.M	1	X049		1	X051	PUCSS	1	X059	
2	X042	HLP2.M	2	X04A	PULSS	2	X052	MGCORS	2	X05A	
3	X043	TSPB	3	X04B	PDCSS	3	X053	MGCCRS	3	X05B	SPTDPRS
4			4			4	X054		4		
5			5			5	X055		5		
6			6			6			6		
7			7			7			7		

H 00C			H 00D			H 00E			H 00F		
bit	SYMBOL	CONTENT	bit	SYMBOL	CONTENT	bit	SYMBOL	CONTENT	bit	SYMBOL	CONTENT
0	X060	MMS-PON	0	X068	*SVFX.M	0	X070*	*-L4	0	X078	MPWS.M
1	X061		1	X069	*SVFY.M	1	X071*	*DEC4	1	X079	HLP.M
2	X062	SEN-RDY	2	X06A	*SVFZ.M	2	X072*	*+L4	2	X07A	WLAL.M
3	X063	MMS-ST	3	X06B		3	X073	THR.M	3	X07B	OHT.M
4			4			4			4		
5			5			5			5		
6			6			6			6		
7			7			7			7		

INDEX NUMBER SHEET LINE

DRN. BY K.Kikuchi DATE 01.12.84 CHK'D BY HS DATE

Mazak YAMAZAKI MAZAK CORPORATION

TITLE VQC-15/40 INPUT (1)

CONTROL DRAWING NO. MZV 4240481151 SIZE 3

SHEET LINE INDEX NUMBER

DRAWING NO. 4240481151 SHEET ____ OF ____

(OPTION)

H010			H011			H012			H013		
bit	SYMBOL	CONTENT	bit	SYMBOL	CONTENT	bit	SYMBOL	CONTENT	bit	SYMBOL	CONTENT
0	X080		0	X088		0	X090		0	X098	
1	X081		1	X089		1	X091		1	X099	
2	X082		2	X08A		2	X092		2	X09A	
3	X083		3	X08B		3	X093		3	X09B	
4	X084		4	X08C		4	X094		4	X09C	
5	X085		5	X08D		5	X095		5	X09D	
6	X086		6	X08E		6	X096		6	X09E	
7	X087		7	X08F		7	X097		7	X09F	

(OPTION)

H014			H015			H016			H017		
bit	SYMBOL	CONTENT	bit	SYMBOL	CONTENT	bit	SYMBOL	CONTENT	bit	SYMBOL	CONTENT
0	X0A0		0	X0A8		0	X0B0	UI0.M	0	X0B8	UI8.M
1	X0A1		1	X0A9		1	X0B1	UI1.M	1	X0B9	UI9.M
2	X0A2		2	X0AA		2	X0B2	UI2.M	2	X0BA	UIA.M
3	X0A3		3	X0AB		3	X0B3	UI3.M	3	X0BB	UIB.M
4	X0A4		4	X0AC		4	X0B4	UI4.M	4	X0BC	UIC.M
5	X0A5		5	X0AD		5	X0B5	UI5.M	5	X0BD	UID.M
6	X0A6		6	X0AE		6	X0B6	UI6.M	6	X0BE	UIE.M
7	X0A7		7	X0AF		7	X0B7	UI7.M	7	X0BF	UIF.M

H			H			H			H		
bit	SYMBOL	CONTENT	bit	SYMBOL	CONTENT	bit	SYMBOL	CONTENT	bit	SYMBOL	CONTENT
0			0			0			0		
1			1			1			1		
2			2			2			2		
3			3			3			3		
4			4			4			4		
5			5			5			5		
6			6			6			6		
7			7			7			7		

H			H			H			H		
bit	SYMBOL	CONTENT	bit	SYMBOL	CONTENT	bit	SYMBOL	CONTENT	bit	SYMBOL	CONTENT
0			0			0			0		
1			1			1			1		
2			2			2			2		
3			3			3			3		
4			4			4			4		
5			5			5			5		
6			6			6			6		
7			7			7			7		

INDEX NUMBER
SHEET LINE

DRN. BY K.Ohkura DATE 61.15.'84
CHK'D BY HS DATE May 2, '84

Mazak
YAMAZAKI MAZAK CORPORATION

TITLE VQC-15/40 INPUT (2) MVC/TNE PC

CONTROL MZV
DRAWING NO. 4240481152
SHEET 3 OF

DRAWING NO. 4240481152
SHEET ____ OF ____

H040			H041			H042			H043		
bit	SYMBOL	CONTENT	bit	SYMBOL	CONTENT	bit	SYMBOL	CONTENT	bit	SYMBOL	CONTENT
0	Y000	PCL	0	Y008	SFR.M	0	Y010	FCM.M	0	Y018	SAB.M
1	Y001	PUC	1	Y009	SRU.M	1	Y011		1	Y019	PIS
2	Y002	MREV.M	2	Y00A	SMR.M	2	Y012	THC.M	2	Y01A	PZS
3	Y003	MFWD.M	3	Y00B	SCAB.M	3	Y013	MCL.M	3	Y01B	PCY1
4	Y004	PAB	4	Y00C		4	Y014	WAB.M	4	Y01C	MFA.M
5	Y005	PDO	5	Y00D	PLD	5	Y015	WAB2.M	5	Y01D	MF.M
6	Y006	PDC	6	Y00E	PUL	6	Y016	TAPC.M	6	Y01E	PCY2
7			7			7			7	Y01F	

H044			H045			H046			H047		
bit	SYMBOL	CONTENT	bit	SYMBOL	CONTENT	bit	SYMBOL	CONTENT	bit	SYMBOL	CONTENT
0	Y020	PW1.M	0	Y028	ZPX.M	0	Y030	M43T.M	0	Y038	AUT.M
1	Y021	OTR.M	1	Y029	ZPY.M	1	Y031	M44T.M	1	Y039	PUCCD
2	Y022	SSET.M	2	Y02A	ZPZ.M	2	Y032	M45T.M	2	Y03A	FHD.PB
3	Y023	ORCM1.M	3	Y02B	ZP4.M	3	Y033	TCME.M	3	Y03B	CSTL.M
4	Y024	HYD.M	4	Y02C		4	Y034	AEXT.M	4	Y03C	CST.PB
5	Y025	TUC.M	5	Y02D	FHDL.M	5	Y035	A-JET.M	5	Y03D	PCLCD
6	Y026	MGC.M	6	Y02E	ZPZZ.M	6	Y036	MMSCMD.M	6	Y03E	AL77,78
7	Y027	WL.M	7	Y02F		7	Y037	SA.M	7	Y03F	MMAL1.M

(OPTION)

H048			H049			H04A			H04B		
bit	SYMBOL	CONTENT	bit	SYMBOL	CONTENT	bit	SYMBOL	CONTENT	bit	SYMBOL	CONTENT
0	Y040	MRDY.M	0	Y048	M21.M	0	Y050	U00.M	0	Y058	U08.M
1	Y041	RST.M	1	Y049	M22.M	1	Y051	U01.M	1	Y059	U09.M
2	Y042	CYFIN.M	2	Y04A	M24.M	2	Y052	U02.M	2	Y05A	U0A.M
3	Y043		3	Y04B	M28.M	3	Y053	U03.M	3	Y05B	U0B.M
4	Y044	M11.M	4	Y04C	M31.M	4	Y054	U04.M	4	Y05C	U0C.M
5	Y045	M12.M	5	Y04D	M32.M	5	Y055	U05.M	5	Y05D	U0D.M
6	Y046	M14.M	6	Y04E	M34.M	6	Y056	U06.M	6	Y05E	U0E.M
7	Y047	M18.M	7	Y04F	M38.M	7	Y057	U07.M	7	Y05F	U0F.M

(OPTION)

H04C			H04D			H			H		
bit	SYMBOL	CONTENT	bit	SYMBOL	CONTENT	bit	SYMBOL	CONTENT	bit	SYMBOL	CONTENT
0	Y060		0	Y068		0			0		
1	Y061		1	Y069		1			1		
2	Y062		2	Y06A		2			2		
3	Y063		3	Y06B		3			3		
4	Y064		4	Y06C		4			4		
5	Y065		5	Y06D		5			5		
6	Y066		6	Y06E		6			6		
7	Y067		7	Y06F		7			7		

INDEX NUMBER
SHEET LINE
DRN. BY K.Hayase DATE 91.5.24
CHK'D BY HS DATE 91.5.25
Mazak
YAMAZAKI MAZAK CORPORATION
TITLE VQC-15/40 OUTPUT (1) (PC → MACHINE)
CONTROL MZY
DRAWING NO. 4240481153
SHEET ___ OF ___
SIZE 3
SHEET LINE
INDEX NUMBER

DRAWING NO. 4240481153
SHEET ___ OF ___

H060			H061			H062			H063		
bit	SYMBOL	CONTENT	bit	SYMBOL	CONTENT	bit	SYMBOL	CONTENT	bit	SYMBOL	CONTENT
0	M000	*RST	0	M008		0	M016	MU6	0	M024	MT4
1	M001	MFP	1	M009		1	M017	MU7	1	M025	MT5
2	M002	SFP	2	M010	MU0	2	M018	MU8	2	M026	MT6
3	M003	TFP	3	M011	MU1	3	M019	MU9	3	M027	MT7
4	M004		4	M012	MU2	4	M020	MT0	4	M028	MT8
5	M005	MH0	5	M013	MU3	5	M021	MT1	5	M029	MT9
6	M006	MH9	6	M014	MU4	6	M022	MT2	6	M030	AUTPLS
7	M007		7	M015	MU5	7	M023	MT3	7	M031	MNLPLS

H064			H065			H066			H067		
bit	SYMBOL	CONTENT	bit	SYMBOL	CONTENT	bit	SYMBOL	CONTENT	bit	SYMBOL	CONTENT
0	M032		0	M040		0	M048	ATCSPPLS	0	M056	SFWPLS
1	M033	TSME	1	M041	MZP	1	M049	ATCSPOF	1	M057	SFWCDAX
2	M034	MROT	2	M042	MZPAX	2	M050		2	M058	SREVPLS
3	M035		3	M043	MNTS	3	M051	RDECPLS	3	M059	SREVCDAX
4	M036		4	M044	CLPLS	4	M052	MGCOME3	4	M060	TSOFFME
5	M037		5	M045	CLAX	5	M053	RDECOF	5	M061	TSOFFAL
6	M038		6	M046	CLOFF	6	M054	RDEC.B	6	M062	TCMEX
7	M039		7	M047	MGCOME2	7	M055	TAPME	7	M063	

H068			H069			H06A			H06B		
bit	SYMBOL	CONTENT	bit	SYMBOL	CONTENT	bit	SYMBOL	CONTENT	bit	SYMBOL	CONTENT
0	M064	TCCON	0	M072	SFWCD	0	M080	MO5ME	0	M088	
1	M065		1	M073	SRVCD	1	M081	PCYIXI	1	M089	STL.P
2	M066	TUCPLS	2	M074	SST	2	M082	PCYIF	2	M090	SOME2
3	M067	TCLPLS	3	M075	ESR	3	M083	PCYIX	3	M091	UOME2
4	M068	TUCME	4	M076	SSTH	4	M084	PCY2XI	4	M092	SOSA
5	M069	TUCCON	5	M077	SMRX	5	M085	PCY2F	5	M093	M03P
6	M070	RECMEM	6	M078	SMR	6	M086	PCY2X	6	M094	M04P
7	M071	SBKMEAX	7	M079		7	M087		7	M095	SRNME

H06C			H06D			H06E			H06F		
bit	SYMBOL	CONTENT	bit	SYMBOL	CONTENT	bit	SYMBOL	CONTENT	bit	SYMBOL	CONTENT
0	M096	SBKME	0	M104	MMSONX	0	M112	FINA	0	M120	
1	M097	M09ME	1	M105	ENCOOL	1	M113	FINB	1	M121	ALFSP
2	M098	M07ME	2	M106	RCTAL1	2	M114		2	M122	REVP
3	M099	M08ME	3	M107	RCTIT	3	M115	FIND	3	M123	SCAN
4	M100	M50ME	4	M108	RCTSTEP2	4	M116	FINE	4	M124	FFREV1
5	M101	M51ME	5	M109	RCTSTEP1	5	M117	FINF	5	M125	FFREV2
6	M102	M53ME	6	M110	RCTAL2	6	M118		6	M126	M38.39
7	M103	M52ME	7	M111	M55ME	7	M119		7	M127	*ALRST

INDEX NUMBER
SHEET LINE

DRN. BY Kikuchi DATE Oct.15.'92
CHK'D BY H.S DATE Nov.2.'92

Mazak
YAMAZAKI MAZAK CORPORATION

TITLE VQC-15/40 IMAGINARY RELAY(1)

CONTROL MZV
DRAWING NO. 4240481155
SHEET 1 OF
SIZE 3

DRAWING NO. 4240481155
SHEET OF

SHEET LINE
INDEX NUMBER

H070			H071			H072			H073		
bit	SYMBOL	CONTENT	bit	SYMBOL	CONTENT	bit	SYMBOL	CONTENT	bit	SYMBOL	CONTENT
0	M128	AEXT-ME	0	M136	ALTC/U	0	M144	ALSSP	0	M152	AFINPLS
1	M129	ARET-ME	1	M137	ALE/R	1	M145	ALSSP2	1	M153	TMEC
2	M130	STLT.P	2	M138		2	M146	ALMGC/O	2	M154	AEXTCD
3	M131	PGEND.P	3	M139		3	M147	AEXMOP	3	M155	ARETCD
4	M132	SZS	4	M140	ALSRX	4	M148		4	M156	MGCOONF
5	M133	SZSK	5	M141	ALHLP	5	M149	MODIAX	5	M157	AOUT.L
6	M134	ARETP	6	M142	ALWLB	6	M150	REFME	6	M158	AIN.L
7	M135	TBRME	7	M143		7	M151		7	M159	MOP

H074			H075			H076			H077		
bit	SYMBOL	CONTENT	bit	SYMBOL	CONTENT	bit	SYMBOL	CONTENT	bit	SYMBOL	CONTENT
0	M160	TCME	0	M168	ATCSTPME	0	M176	SZS1	0	M184	CYCLE-A
1	M161	MGCOME1	1	M169	ATCFHDME	1	M177	ZES2	1	M185	MEMA-1
2	M162	MGCCME	2	M170		2	M178	FHDBX	2	M186	CNDA-1
3	M163	MGCOX	3	M171	TFP1	3	M179	CSTBX	3	M187	MEMA-2
4	M164	TSO	4	M172	TFP2	4	M180		4	M188	CNDA-2
5	M165	TO	5	M173	MOVZME	5	M181	INTXZ	5	M189	CNDAIX
6	M166	TULME	6	M174	LOADT	6	M182	ZPXM	6	M190	AUTTCME
7	M167	TLME	7	M175	UNLOADT	7	M183	ZPXL	7	M191	MDITCME

H078			H079			H07A			H07B		
bit	SYMBOL	CONTENT	bit	SYMBOL	CONTENT	bit	SYMBOL	CONTENT	bit	SYMBOL	CONTENT
0	M192	MFAIL1	0	M200		0	M208	M61M	0	M216	TNPS1
1	M193	MFAIL2	1	M201	RTCLP	1	M209	M62M	1	M217	TNPS2
2	M194	MFAIL3	2	M202	MF	2	M210	M64M	2	M218	TNPS3
3	M195	MFAIL4	3	M203	SF	3	M211	M65M	3	M219	TNPS4
4	M196	MFAIL5	4	M204	TF	4	M212	M68M	4	M220	TNPS5
5	M197	PRENDME	5	M205	BF	5	M213	M69M	5	M221	
6	M198		6	M206		6	M214	M71M	6	M222	
7	M199		7	M207	GRT16	7	M215	M72M	7	M223	

H07C			H07D			H07E			H07F		
bit	SYMBOL	CONTENT	bit	SYMBOL	CONTENT	bit	SYMBOL	CONTENT	bit	SYMBOL	CONTENT
0	M224	GRTCD	0	M232	-XMEM	0	M240	ALTBKG	0	M248	AUTOME2
1	M225	MRF	1	M233	-YMEM	1	M241	ALTBR	1	M249	ZRNAX
2	M226	MRR	2	M234	-ZMEM	2	M242	TLIFSBK	2	M250	
3	M227	MSTP	3	M235	+XENV	3	M243	-YMOP	3	M251	NCAL
4	M228	FWDME	4	M236	+YENV	4	M244	-ZMOP	4	M252	SBKAX
5	M229	REVME	5	M237	+ZENV	5	M245	-4MOP	5	M253	AEALZ
6	M230	EQTST	6	M238	ZP2CDAX	6	M246	-XMOP	6	M254	TSINTL
7	M231		7	M239	+YAX	7	M247	+ZAX	7	M255	MOP5AX

INDEX NUMBER

SHEET LINE

DRN. BY K.Ishikawa DATE 84.12.24

CHK'D BY J.S. DATE 84.12.25

Mazak

YAMAZAKI MAZAK CORPORATION

TITLE VQC-15/40 IMAGINARY RELAY(2)

CONTROL M2V

DRAWING NO. 4240481156

SHEET ___ OF ___

SIZE 3

SHEET LINE

INDEX NUMBER

DRAWING NO. 4240481156

SHEET ___ OF ___

H080			H081			H082			H083		
bit	SYMBOL	CONTENT	bit	SYMBOL	CONTENT	bit	SYMBOL	CONTENT	bit	SYMBOL	CONTENT
0	M256	CYCLE-B	0	M264	CYCLE-C	0	M272	MEMD-1	0	M280	CYCLE-E
1	M257	MEMB-1	1	M265	MEMC-1	1	M273	CNDD-1	1	M281	MEME-1
2	M258	CNDB-1	2	M266	CNDC-1	2	M274	MEMD-2	2	M282	CNDE-1
3	M259	MEMB-2	3	M267	MEMC-2	3	M275	CNDD-2	3	M283	MEME-2
4	M260	CNDB-2	4	M268	CNDC-2	4	M276	MEMD-3	4	M284	CNDE-2
5	M261	MEMB-3	5	M269		5	M277	CNDD-3	5	M285	MEME-3
6	M262	CNDB-3	6	M270		6	M278	MEMD-4	6	M286	CNDE-3
7	M263	CNDB3X	7	M271	CYCLE-D	7	M279	CNDD-4	7	M287	CNDD-3AX

H084			H085			H086			H087		
bit	SYMBOL	CONTENT	bit	SYMBOL	CONTENT	bit	SYMBOL	CONTENT	bit	SYMBOL	CONTENT
0	M288	CYCLE-F	0	M296	ZPAX	0	M304	MNN4	0	M312	MND2
1	M289	MEMF-1	1	M297	MEMD-5	1	M305	MNN5	1	M313	MND3
2	M290	CNDF-1	2	M298	CNDD-5	2	M306	MNN6	2	M314	MND4
3	M291	MEMF-2	3	M299	MEMF-4	3	M307	MNN8	3	M315	MND5
4	M292	CNDF-2	4	M300	CNDF-4	4	M308		4	M316	MND6
5	M293	MEMF-3	5	M301	ENMCH	5	M309	ZPAX2	5	M317	MND7
6	M294	CNDF-3	6	M302	MNN2	6	M310		6	M318	MND8
7	M295	MGTOS	7	M303	MNN3	7	M311	MND1	7	M319	MND9

H088			H089			H08A			H08B		
bit	SYMBOL	CONTENT	bit	SYMBOL	CONTENT	bit	SYMBOL	CONTENT	bit	SYMBOL	CONTENT
0	M320		0	M328		0	M336	TUCPLS	0	M344	SBKPLS
1	M321	MNNT	1	M329	M44	1	M337		1	M345	SBKOFF
2	M322	MNNT2	2	M330	M45	2	M338	LHTPLS	2	M346	SBKON
3	M323	MNNT3	3	M331	RTUCCD	3	M339	LHTOFF	3	M347	OSPPLS
4	M324		4	M332	MZPRTUC	4	M340	LHTON	4	M348	OSPOFF
5	M325		5	M333	IND.M	5	M341	MLKPLS	5	M349	OSPON
6	M326		6	M334	MRTUCX	6	M342	ALSBK	6	M350	DRPLS
7	M327	MDOP1	7	M335	M43	7	M343	MLKON	7	M351	DROFF

H08C			H08D			H08E			H08F		
bit	SYMBOL	CONTENT	bit	SYMBOL	CONTENT	bit	SYMBOL	CONTENT	bit	SYMBOL	CONTENT
0	M352	TBKNGPRS	0	M360	BALOFF	0	M368	MLTCME	0	M376	PULST
1	M353	TBPLS	1	M361	BALON	1	M369	MLKX	1	M377	PULMOP
2	M354	TBKNGOFF	2	M362	ARMOPLS	2	M370	ENPLD	2	M378	PLDL
3	M355	TBKNGON	3	M363	MARETL	3	M371	ENPLDM	3	M379	PULL
4	M356	ARMIPLS	4	M364		4	M372	PLDST	4	M380	ENPDC
5	M357	ARMOPLS	5	M365	F1BPLS	5	M373	PLDMOP	5	M381	PDCST
6	M358		6	M366	TUCSSP	6	M374	ENPUL	6	M382	PDOST
7	M359	BALPLS	7	M367		7	M375	ENPULM	7	M383	CAUT

INDEX NUMBER

SHEET | LINE

DRN. BY K.Nagata DATE 01.05.24
CHK'D BY HS DATE May 3.'85

Mazak
YAMAZAKI MAZAK CORPORATION

TITLE VQC-15/40 IMAGINARY RERAY(3)

CONTROL MZV
DRAWING NO. 4240481157
SHEET ___ OF ___
SIZE 3

SHEET | LINE

INDEX NUMBER

DRAWING NO. 4240481157
SHEET ___ OF ___

H090			H091			H092			H093		
bit	SYMBOL	CONTENT	bit	SYMBOL	CONTENT	bit	SYMBOL	CONTENT	bit	SYMBOL	CONTENT
0	M384	CMAN	0	M392	M67FINX	0	M400	SQ0	0	M408	SQ1
1	M385	COFF	1	M393	PCFIN	1	M401		1	M409	
2	M386	MAUT	2	M394	PFAIL	2	M402		2	M410	
3	M387	MMAN	3	M395	ATCFINME	3	M403		3	M411	
4	M388	MOFF	4	M396	PDOL	4	M404		4	M412	
5	M389	BAUT	5	M397	PDCL	5	M405		5	M413	
6	M390	BMAN	6	M398	PDCMOP	6	M406		6	M414	
7	M391	BOFF	7	M399		7	M407		7	M415	

H094			H095			H096			H097		
bit	SYMBOL	CONTENT	bit	SYMBOL	CONTENT	bit	SYMBOL	CONTENT	bit	SYMBOL	CONTENT
0	M416	SQ2	0	M424	SQ3	0	M432	SQ4	0	M440	
1	M417		1	M425		1	M433		1	M441	
2	M418		2	M426		2	M434		2	M442	
3	M419		3	M427		3	M435		3	M443	
4	M420		4	M428		4	M436		4	M444	
5	M421		5	M429		5	M437		5	M445	
6	M422		6	M430		6	M438		6	M446	
7	M423		7	M431		7	M439		7	M447	

H098			H099			H09A			H09B		
bit	SYMBOL	CONTENT	bit	SYMBOL	CONTENT	bit	SYMBOL	CONTENT	bit	SYMBOL	CONTENT
0	M448	PCCDA	0	M456		0	M464	PCS1	0	M472	ENPCL
1	M449	PCREQP	1	M457		1	M465	PCS2	1	M473	PCLST
2	M450	PCUME	2	M458		2	M466	PCS3	2	M474	PCLL
3	M451	EQPNO	3	M459		3	M467	PCS4	3	M475	ENPUC
4	M452	TPNO	4	M460		4	M468	PCS5	4	M476	PUCST
5	M453	POCD	5	M461		5	M469	PCS6	5	M477	PUCL
6	M454	PCS4P	6	M462		6	M470		6	M478	PABST
7	M455		7	M463		7	M471		7	M479	PCLMOP

H09C			H09D			H09E			H09F		
bit	SYMBOL	CONTENT	bit	SYMBOL	CONTENT	bit	SYMBOL	CONTENT	bit	SYMBOL	CONTENT
0	M480	PUCMOP	0	M488		0	M496	SQ5	0	M504	SQ6
1	M481	ENPS	1	M489		1	M497		1	M505	
2	M482	PISST	2	M490		2	M498		2	M506	
3	M483	PISMOP	3	M491		3	M499		3	M507	
4	M484	PISL	4	M492		4	M500		4	M508	
5	M485	PZSST	5	M493		5	M501		5	M509	
6	M486	PZSMOP	6	M494		6	M502		6	M510	
7	M487	PZSL	7	M495		7	M503		7	M511	

INDEX NUMBER
SHEET
LINE
DRN. BY
DATE
CHK'D BY
Mazak
TITLE VQC-15/40 IMAGINARY RELAY(4)
CONTROL
DRAWING NO. MZV 424048158
SIZE
LINE
INDEX NUMBER

DRAWING NO. 424048158
SHEET ____ OF ____

H 0A0			H 0A1			H 0A2			H 0A3		
bit	SYMBOL	CONTENT	bit	SYMBOL	CONTENT	bit	SYMBOL	CONTENT	bit	SYMBOL	CONTENT
0	T.C0	ESPT	0	T.C8		0	T.C16	SZSXT	0	T.C24	TFT1
1	T.C1	MFT	1	T.C9		1	T.C17	ORCT1	1	T.C25	TFT2
2	T.C2	SFT	2	T.C10	MPWST	2	T.C18	ORCT2	2	T.C26	ATCFINT
3	T.C3	TFT	3	T.C11	MIPOFT	3	T.C19		3	T.C27	
4	T.C4	SSPT	4	T.C12	ALTC/UT	4	T.C20	LPT	4	T.C28	TUCFST
5	T.C5		5	T.C13	ALE/RT	5	T.C21	ALSSPT	5	T.C29	TSOFFT
6	T.C6	SORT	6	T.C14		6	T.C22	MOPT1	6	T.C30	ALMGC/OT
7	T.C7		7	T.C15	ALSRXT	7	T.C23	MOPT2	7	T.C31	CNDIT

H 0A4			H 0A5			H 0A6			H 0A7		
bit	SYMBOL	CONTENT	bit	SYMBOL	CONTENT	bit	SYMBOL	CONTENT	bit	SYMBOL	CONTENT
0	T.C32	CNDBT	0	T.C40		0	T.C48	RCTLST	0	T.C56	M6.7FNXT
1	T.C33	STLT	1	T.C41		1	T.C49	FZRT-Z	1	T.C57	
2	T.C34	SAT	2	T.C42	UCLDT	2	T.C50	FZRT-Y	2	T.C58	
3	T.C35	SABT	3	T.C43	CLDT	3	T.C51	FZRT-X	3	T.C59	
4	T.C36	RTUCT	4	T.C44	MMSALT	4	T.C52	FZRT-4	4	T.C60	
5	T.C37	RTCLT	5	T.C45		5	T.C53		5	T.C61	SZST
6	T.C38		6	T.C46	MFDT	6	T.C54		6	T.C62	
7	T.C39	ERSTT	7	T.C47	SJSTT	7	T.C55		7	T.C63	

H 0A8			H 0A9			H 0AA			H 0AB		
bit	SYMBOL	CONTENT	bit	SYMBOL	CONTENT	bit	SYMBOL	CONTENT	bit	SYMBOL	CONTENT
0	T.C64		0	T.C72		0	T.C80		0	T.C88	
1	T.C65	MGRSTT	1	T.C73		1	T.C81		1	T.C89	
2	T.C66		2	T.C74		2	T.C82		2	T.C90	
3	T.C67		3	T.C75		3	T.C83		3	T.C91	
4	T.C68		4	T.C76		4	T.C84		4	T.C92	
5	T.C69		5	T.C77		5	T.C85		5	T.C93	
6	T.C70		6	T.C78		6	T.C86		6	T.C94	
7	T.C71		7	T.C79		7	T.C87		7	T.C95	

H 0AC			H 0AD			H 0AE			H 0AF		
bit	SYMBOL	CONTENT	bit	SYMBOL	CONTENT	bit	SYMBOL	CONTENT	bit	SYMBOL	CONTENT
0	T.C96		0	T.C104		0	T.C112	PDCMOPD	0	T.C120	PDCAC
1	T.C97		1	T.C105		1	T.C113		1	T.C121	PDOAC
2	T.C98		2	T.C106		2	T.C114	PLDMOPD	2	T.C122	PLDAC
3	T.C99		3	T.C107		3	T.C115	PULMOPD	3	T.C123	PULAC
4	T.C100		4	T.C108		4	T.C116	PISMOPD	4	T.C124	PISAC
5	T.C101		5	T.C109		5	T.C117	PZSMOPD	5	T.C125	PZSAC
6	T.C102		6	T.C110		6	T.C118	PCLMOPD	6	T.C126	PCLAC
7	T.C103		7	T.C111		7	T.C119	PUCMOPD	7	T.C127	PUCAC

INDEX NUMBER
SHEET
LINE

DRN. BY K.Ishiura DATE 81.1.30
CHK'D BY H.S. DATE Nov 1.'81

Mazak
YAMAZAKI MAZAK CORPORATION

TITLE VQC-15/40
TIMER(T), COUNTER(C)

CONTROL MZV
DRAWING NO. 4240481159
SHEET
SIZE 3

DRAWING NO. 4240481159
SHEET ____ OF ____

H 0B0			H 0B1			H 0B2			H 0B3		
bit	SYMBOL	CONTENT	bit	SYMBOL	CONTENT	bit	SYMBOL	CONTENT	bit	SYMBOL	CONTENT
0	T.C0	ESPT	0	T.C8		0	T.C16	SZSXT	0	T.C24	TFT1
1	T.C1	MFT	1	T.C9		1	T.C17	ORCT1	1	T.C25	TFT2
2	T.C2	SFT	2	T.C10	MPWST	2	T.C18	ORCT2	2	T.C26	ATCFINT
3	T.C3	TFT	3	T.C11	MIPOFT	3	T.C19		3	T.C27	
4	T.C4	SSPT	4	T.C12	ALTC/UT	4	T.C20	LPT	4	T.C28	TUCFST
5	T.C5		5	T.C13	ALE/RT	5	T.C21	ALSSPT	5	T.C29	TSOFFT
6	T.C6	SORT	6	T.C14		6	T.C22	MOPT1	6	T.C30	ALMGC/OT
7	T.C7		7	T.C15	ALSRXT	7	T.C23	MOPT2	7	T.C31	CNDIT

H 0B4			H 0B5			H 0B6			H 0B7		
bit	SYMBOL	CONTENT	bit	SYMBOL	CONTENT	bit	SYMBOL	CONTENT	bit	SYMBOL	CONTENT
0	T.C32	CNDBT	0	T.C40		0	T.C48	RCTLST	0	T.C56	M6.7FNXT
1	T.C33	STLT	1	T.C41		1	T.C49	FZRT-Z	1	T.C57	
2	T.C34	SAT	2	T.C42	UCLDT	2	T.C50	FZRT-Y	2	T.C58	
3	T.C35	SABT	3	T.C43	CLDT	3	T.C51	FZRT-X	3	T.C59	
4	T.C36	RTUCT	4	T.C44	MMSALT	4	T.C52	FZRT-4	4	T.C60	
5	T.C37	RTCLT	5	T.C45		5	T.C53		5	T.C61	SZST
6	T.C38		6	T.C46	MFDT	6	T.C54		6	T.C62	
7	T.C39	ERSTT	7	T.C47	SJSTT	7	T.C55		7	T.C63	

H 0B8			H 0B9			H 0BA			H 0BB		
bit	SYMBOL	CONTENT	bit	SYMBOL	CONTENT	bit	SYMBOL	CONTENT	bit	SYMBOL	CONTENT
0	T.C64		0	T.C72		0	T.C80		0	T.C88	
1	T.C65	MGRSTT	1	T.C73		1	T.C81		1	T.C89	
2	T.C66		2	T.C74		2	T.C82		2	T.C90	
3	T.C67		3	T.C75		3	T.C83		3	T.C91	
4	T.C68		4	T.C76		4	T.C84		4	T.C92	
5	T.C69		5	T.C77		5	T.C85		5	T.C93	
6	T.C70		6	T.C78		6	T.C86		6	T.C94	
7	T.C71		7	T.C79		7	T.C87		7	T.C95	

H 0BC			H 0BD			H 0BE			H 0BF		
bit	SYMBOL	CONTENT	bit	SYMBOL	CONTENT	bit	SYMBOL	CONTENT	bit	SYMBOL	CONTENT
0	T.C96		0	T.C104		0	T.C112	PDCMOPD	0	T.C120	PDCAL
1	T.C97		1	T.C105		1	T.C113		1	T.C121	PDOAL
2	T.C98		2	T.C106		2	T.C114	PLDMOPD	2	T.C122	PLDAL
3	T.C99		3	T.C107		3	T.C115	PULMOPD	3	T.C123	PULAL
4	T.C100		4	T.C108		4	T.C116	PISMOPD	4	T.C124	PISAL
5	T.C101		5	T.C109		5	T.C117	PZSMOPD	5	T.C125	PZSAL
6	T.C102		6	T.C110		6	T.C118	PCLMOPD	6	T.C126	PCLAL
7	T.C103		7	T.C111		7	T.C119	PUCMOPD	7	T.C127	PUCAL

INDEX NUMBER
SHEET LINE
DRN. BY K.Hirata DATE 6.11.84
CHK'D BY H.S. DATE
Mazak
YAMAZAKI MAZAK CORPORATION
TITLE VQC-15/40 TIMER(T), COUNTER(C)
CONTROL DRAWING NO. 4240481160
SIZE 3
DRAWING NO. 4240481160
SHEET ____ OF ____

H 0C0			H 0C1			H 0C2			H 0C3		
bit	SYMBOL	CONTENT	bit	SYMBOL	CONTENT	bit	SYMBOL	CONTENT	bit	SYMBOL	CONTENT
0	F000	AL 0	0	F008	AL 8	0	F016	AL16	0	F024	AL 24
1	F001	AL 1	1	F009	AL 9	1	F017	AL17	1	F025	AL25
2	F002	AL 2	2	F010	AL10	2	F018	AL18	2	F026	AL26
3	F003	AL 3	3	F011	AL11	3	F019	AL19	3	F027	AL27
4	F004	AL 4	4	F012	AL12	4	F020	AL20	4	F028	AL28
5	F005	AL 5	5	F013	AL13	5	F021	AL21	5	F029	AL29
6	F006	AL 6	6	F014	AL14	6	F022	AL22	6	F030	AL30
7	F007	AL 7	7	F015	AL15	7	F023	AL23	7	F031	AL31

H 0C4			H 0C5			H 0C6			H 0C7		
bit	SYMBOL	CONTENT	bit	SYMBOL	CONTENT	bit	SYMBOL	CONTENT	bit	SYMBOL	CONTENT
0	F032	AL32	0	F040	AL40	0	F048	AL48	0	F056	AL56
1	F033	AL33	1	F041	AL41	1	F049	AL49	1	F057	AL57
2	F034	AL34	2	F042	AL42	2	F050	AL50	2	F058	AL58
3	F035	AL35	3	F043	AL43	3	F051	AL51	3	F059	AL59
4	F036	AL36	4	F044	AL44	4	F052	AL52	4	F060	AL60
5	F037	AL37	5	F045	AL45	5	F053	AL53	5	F061	AL61
6	F038	AL38	6	F046	AL46	6	F054	AL54	6	F062	AL62
7	F039	AL39	7	F047	AL47	7	F055	AL55	7	F063	AL63

H 0C8			H 0C9			H 0CA			H 0CB		
bit	SYMBOL	CONTENT	bit	SYMBOL	CONTENT	bit	SYMBOL	CONTENT	bit	SYMBOL	CONTENT
0	F064	AL64	0	F072	AL72	0	F080	MOP1	0	F088	MOP 9
1	F065	AL65	1	F073	AL73	1	F081	MOP2	1	F089	MOP10
2	F066	AL66	2	F074	AL74	2	F082	MOP3	2	F090	MOP11
3	F067	AL67	3	F075	AL75	3	F083	MOP4	3	F091	MOP12
4	F068	AL68	4	F076	AL76	4	F084	MOP5	4	F092	MOP13
5	F069	AL69	5	F077	AL77	5	F085	MOP6	5	F093	MOP14
6	F070	AL70	6	F078	AL78	6	F086	MOP7	6	F094	MOP15
7	F071	AL71	7	F079	AL79	7	F087	MOP8	7	F095	MOP16

H 0CC			H			H			H		
bit	SYMBOL	CONTENT	bit	SYMBOL	CONTENT	bit	SYMBOL	CONTENT	bit	SYMBOL	CONTENT
0	F096	MOP17	0			0			0		
1	F097	MOP18	1			1			1		
2	F098	MOP19	2			2			2		
3	F099	MOP20	3			3			3		
4			4			4			4		
5			5			5			5		
6			6			6			6		
7			7			7			7		

INDEX NUMBER
SHEET
LINE
DRN. BY
DATE
CHK'D BY
DATE
Mazak
YAMAZAKI MAZAK CORPORATION
TITLE
VQC-15/40
ALARM
CONTROL
MZV
DRAWING NO.
4240481161
SHEET
SIZE
3

DRAWING NO.
4240481161
SHEET ____ OF ____

H 100			H 101			H 102			H 103		
bit	SYMBOL	CONTENT	bit	SYMBOL	CONTENT	bit	SYMBOL	CONTENT	bit	SYMBOL	CONTENT
0	Y100	ITX.N	0	Y108	SVFX.N	0	Y110		0	Y118	
1	Y101	ITY.N	1	Y109	SVFY.N	1	Y111	PEND.N	1	Y119	WFL.N
2	Y102	ITZ.N	2	Y10A	SVFZ.N	2	Y112	PERDY.N	2	Y11A	
3	Y103	IT4.N	3	Y10B	SVF4.N	3	Y113	FSTL.N	3	Y11B	MFL.N
4	Y104		4	Y10C		4	Y114		4	Y11C	
5	Y105		5	Y10D		5	Y115		5	Y11D	
6	Y106		6	Y10E		6	Y116	AZP.N	6	Y11E	PL2.N
7	Y107		7	Y10F		7	Y117	MCRDY.N	7	Y11F	PL1.N

H 104			H 105			H 106			H 107		
bit	SYMBOL	CONTENT	bit	SYMBOL	CONTENT	bit	SYMBOL	CONTENT	bit	SYMBOL	CONTENT
0	Y120	GSH.N	0	Y128	PCDS1.N	0	Y130		0	Y138	
1	Y121		1	Y129	PCDS2.N	1	Y131		1	Y139	
2	Y122		2	Y12A		2	Y132		2	Y13A	
3	Y123		3	Y12B		3	Y133		3	Y13B	
4	Y124		4	Y12C		4	Y134		4	Y13C	
5	Y125		5	Y12D		5	Y135		5	Y13D	
6	Y126		6	Y12E	PCMCD.N	6	Y136		6	Y13E	
7	Y127		7	Y12F	PCFIN.N	7	Y137		7	Y13F	

H 108			H 109			H 110			H 111		
bit	SYMBOL	CONTENT	bit	SYMBOL	CONTENT	bit	SYMBOL	CONTENT	bit	SYMBOL	CONTENT
0	Y140	SBK.N	0	Y148		0	Y150	MEND1.L	0	Y158	MEND9.L
1	Y141	MLK.N	1	Y149		1	Y151	MEND2.L	1	Y159	
2	Y142	DRN.N	2	Y14A		2	Y152	MEND3.L	2	Y15A	
3	Y143	EREND.N	3	Y14B		3	Y153	MEND4.L	3	Y15B	
4	Y144	MIRRORX	4	Y14C		4	Y154	MEND5.L	4	Y15C	
5	Y145	MIRRORY	5	Y14D		5	Y155	MEND6.L	5	Y15D	
6	Y146		6	Y14E		6	Y156	MEND7.L	6	Y15E	
7	Y147	PCDSFN.N	7	Y14F		7	Y157	MEND8.L	7	Y15F	

H 112			H 113			H 114			H 115		
bit	SYMBOL	CONTENT	bit	SYMBOL	CONTENT	bit	SYMBOL	CONTENT	bit	SYMBOL	CONTENT
0	Y160		0	Y168	FIN.N	0	Y170	UI0.N	0	Y178	UI8.N
1	Y161		1	Y169	ERS.N	1	Y171	UI1.N	1	Y179	UI9.N
2	Y162		2	Y16A	OTNEG.N	2	Y172	UI2.N	2	Y17A	UIA.N
3	Y163		3	Y16B	ZPDEC.N	3	Y173	UI3.N	3	Y17B	UIB.N
4	Y164		4	Y16C	AEXT.N	4	Y174	UI4.N	4	Y17C	UIC.N
5	Y165		5	Y16D	TBRCD.N	5	Y175	UI5.N	5	Y17D	UID.N
6	Y166		6	Y16E	TBRFIN.N	6	Y176	UI6.N	6	Y17E	UIE.N
7	Y167		7	Y16F	MMSCD.N	7	Y177	UI7.N	7	Y17F	UIF.N

INDEX NUMBER
SHEET LINE

DRN. BY K.Hasegawa DATE 81.12.24
CHK'D BY HS DATE Nov 1.85

Mazak
YAMAZAKI MAZAK CORPORATION

TITLE VQC-15/40 OUTPUT (3) (PC → NC)

CONT'R/I M2Y
DRAWING NO. 4240481162
SHEET ___ OF ___
SIZE 3

DRAWING NO. 4240481162
SHEET ___ OF ___

H 110			H 111			H 112			H 113		
bit	SYMBOL	CONTENT	bit	SYMBOL	CONTENT	bit	SYMBOL	CONTENT	bit	SYMBOL	CONTENT
0	Y180	RST.B.N	0	Y188	+X.N	0	Y190	AUT.B.N	0	Y198	ST.B.N
1	Y181	SOVRU.N	1	Y189	-X.N	1	Y191	MDI.B.N	1	Y199	SP.B.N
2	Y182	SOVRD.N	2	Y18A	+Y.N	2	Y192	RT.B.N	2	Y19A	ZP.B.N
3	Y183	FOVRU.N	3	Y18B	-Y.N	3	Y193	J.B.N	3	Y19B	TPS.N
4	Y184	FOVRD.N	4	Y18C	+Z.N	4	Y194	ZP1.B.N	4	Y19C	VFC.N
5	Y185	OTR.N	5	Y18D	-Z.N	5	Y195	ZP2.B.N	5	Y19D	
6	Y186		6	Y18E	+4.N	6	Y196	HS1.B.N	6	Y19E	RDEC.B.N
7	Y187		7	Y18F	-4.N	7	Y197	HS10.B.N	7	Y19F	

H 114			H 115			H 116			H 117		
bit	SYMBOL	CONTENT	bit	SYMBOL	CONTENT	bit	SYMBOL	CONTENT	bit	SYMBOL	CONTENT
0	Y1A0		0	Y1A8	ATCSP.N	0	Y1B0	HX.B.N	0	Y1B8	
1	Y1A1		1	Y1A9	CL.B.N	1	Y1B1	HY.B.N	1	Y1B9	
2	Y1A2		2	Y1AA		2	Y1B2	HZ.B.N	2	Y1BA	
3	Y1A3		3	Y1AB	F2.B.N	3	Y1B3	H4.B.N	3	Y1BB	
4	Y1A4		4	Y1AC	F3.B.N	4	Y1B4		4	Y1BC	
5	Y1A5		5	Y1AD		5	Y1B5		5	Y1BD	
6	Y1A6		6	Y1AE		6	Y1B6		6	Y1BE	
7	Y1A7		7	Y1AF		7	Y1B7	PRG.N	7	Y1BF	

H 118			H 119			H 11A			H 11B		
bit	SYMBOL	CONTENT	bit	SYMBOL	CONTENT	bit	SYMBOL	CONTENT	bit	SYMBOL	CONTENT
0	Y1C0	AUT.L	0	Y1C8	ST.L	0	Y1D0	SST.L	0	Y1D8	ATCSP.L
1	Y1C1	MDI.L	1	Y1C9	SP.L	1	Y1D1	SSP.L	1	Y1D9	CL.L
2	Y1C2	RT.L	2	Y1CA	ZP.L	2	Y1D2	SJOG.L	2	Y1DA	F1.L
3	Y1C3	J.L	3	Y1CB		3	Y1D3	SREV.L	3	Y1DB	F2.L
4	Y1C4	ZP1.L	4	Y1CC		4	Y1D4	SLCK.L	4	Y1DC	F3.L
5	Y1C5	ZP2.L	5	Y1CD		5	Y1D5	TUC.L	5	Y1DD	
6	Y1C6	HS1.L	6	Y1CE	RDEC.L	6	Y1D6		6	Y1DE	
7	Y1C7	HS10.L	7	Y1CF		7	Y1D7		7	Y1DF	

H 11C			H 11D			H 11E			H 11F		
bit	SYMBOL	CONTENT	bit	SYMBOL	CONTENT	bit	SYMBOL	CONTENT	bit	SYMBOL	CONTENT
0	Y1E0		0	Y1E8		0	Y1F0		0	Y1F8	MMSON.L
1	Y1E1		1	Y1E9		1	Y1F1		1	Y1F9	MMSRDY.L
2	Y1E2		2	Y1EA		2	Y1F2		2	Y1FA	MMSST.L
3	Y1E3		3	Y1EB	PRGSTP.L	3	Y1F3		3	Y1FB	MMSSKP.L
4	Y1E4		4	Y1EC	MFAIL.L	4	Y1F4		4	Y1FC	
5	Y1E5		5	Y1ED		5	Y1F5		5	Y1FD	
6	Y1E6		6	Y1EE		6	Y1F6		6	Y1FE	
7	Y1E7		7	Y1EF		7	Y1F7		7	Y1FF	

INDEX NUMBER
SHEET LINE
DRN. BY
DATE
CHK'D BY
DATE
Mazak
YAMAZAKI MAZAK CORPORATION
TITLE VQC-15/40 OUTPUT (4) 19C ~ NC
CONTROL M2V
DRAW NG NO. 4240481163
SHEET 3 SIZE
DRAWING NO. 4240481163
SHEET ____ OF ____

H 130			H 131			H 132			H 133		
bit	SYMBOL	CONTENT	bit	SYMBOL	CONTENT	bit	SYMBOL	CONTENT	bit	SYMBOL	CONTENT
0	X100	ZPX1.N	0	X108	ZPX2.N	0	X110		0	X118	MA.N
1	X101	ZPY1.N	1	X109	ZPY2.N	1	X111	STL.N	1	X119	SA.N
2	X102	ZPZ1.N	2	X10A	ZPZ2.N	2	X112	SPL.N	2	X11A	RST.N
3	X103	ZP41.N	3	X10B		3	X113	DEN.N	3	X11B	
4	X104	PLN1.N	4	X10C	PLN10.N	4	X114	DEN2.N	4	X11C	
5	X105	PLN2.N	5	X10D	PLN20.N	5	X115		5	X11D	
6	X106	PLN4.N	6	X10E	PLN40.N	6	X116		6	X11E	
7	X107	PLN8.N	7	X10F	PLN80.N	7	X117		7	X11F	

H 134			H 135			H 136			H 137		
bit	SYMBOL	CONTENT	bit	SYMBOL	CONTENT	bit	SYMBOL	CONTENT	bit	SYMBOL	CONTENT
0	X120	MF.N	0	X128	M11.N	0	X130	B11.N	0	X138	B31.N
1	X121	SF.N	1	X129	M12.N	1	X131	B12.N	1	X139	B32.N
2	X122	TF.N	2	X12A	M14.N	2	X132	B14.N	2	X13A	B34.N
3	X123	BF.N	3	X12B	M18.N	3	X133	B18.N	3	X13B	B38.N
4	X124		4	X12C	M21.N	4	X134	B21.N	4	X13C	
5	X125		5	X12D	M22.N	5	X135	B22.N	5	X13D	
6	X126		6	X12E	M24.N	6	X136	B24.N	6	X13E	
7	X127		7	X12F	M28.N	7	X137	B28.N	7	X13F	

H 138			H 139			H 140			H 141		
bit	SYMBOL	CONTENT	bit	SYMBOL	CONTENT	bit	SYMBOL	CONTENT	bit	SYMBOL	CONTENT
0	X140	T11.N	0	X148		0	X150		0	X158	SSP.N
1	X141	T12.N	1	X149		1	X151		1	X159	TOUCH.N
2	X142	T14.N	2	X14A		2	X152		2	X15A	TAP.N
3	X143	T18.N	3	X14B		3	X153		3	X15B	DIHT.N
4	X144	T21.N	4	X14C		4	X154		4	X15C	MC4.N
5	X145	T22.N	5	X14D		5	X155		5	X15D	AEXT.N
6	X146	T24.N	6	X14E		6	X156		6	X15E	ARET.N
7	X147	T28.N	7	X14F		7	X157		7	X15F	REQ.N

H 142			H 143			H 144			H 145		
bit	SYMBOL	CONTENT	bit	SYMBOL	CONTENT	bit	SYMBOL	CONTENT	bit	SYMBOL	CONTENT
0	X160	M31.N	0	X168	TS11.N	0	X170	TN11.N	0	X178	
1	X161	M32.N	1	X169	TS12.N	1	X171	TN12.N	1	X179	
2	X162	M34.N	2	X16A	TS14.N	2	X172	TN14.N	2	X17A	
3	X163	M38.N	3	X16B	TS18.N	3	X173	TN18.N	3	X17B	
4	X164		4	X16C	TS21.N	4	X174	TN21.N	4	X17C	
5	X165		5	X16D	TS22.N	5	X175	TN22.N	5	X17D	
6	X166		6	X16E	TS24.N	6	X176	TN24.N	6	X17E	
7	X167		7	X16F	TS28.N	7	X177	TN28.N	7	X17F	

INDEX NUMBER

SHEET | LINE

DRN. BY K.Kawa DATE 01.10.89
CHK'D BY H.S DATE 11.1.89

Mazak
YAMAZAKI MAZAK CORPORATION

TITLE VQC-15/40 INPUT (3) (NC → PC)

CONTROL M2V
DRAWING NO. 4240481164
SHEET ___ OF ___
SIZE 3

DRAWING NO. 4240481164
SHEET ___ OF ___

H 140			H 141			H 142			H 143		
bit	SYMBOL	CONTENT	bit	SYMBOL	CONTENT	bit	SYMBOL	CONTENT	bit	SYMBOL	CONTENT
0	X180	AUT.N	0	X188	MG.N	0	X190	SMZX.N	0	X198	
1	X181	MDI.N	1	X189	INTF.N	1	X191	SMZY.N	1	X199	
2	X182	RT.N	2	X18A	INTFZ.N	2	X192	SMZZ.N	2	X19A	
3	X183	J.N	3	X18B	TLOVR.N	3	X193	SMZ4.N	3	X19B	PGEND.N
4	X184	ZP1.N	4	X18C	ALTBK.N	4	X194		4	X19C	
5	X185	ZP2.N	5	X18D	TBKG.N	5	X195		5	X19D	EIA.N
6	X186	HS1.N	6	X18E	TBRFIN.N	6	X196		6	X19E	
7	X187	HS10.N	7	X18F	MIRR.N	7	X197		7	X19F	

H 144			H 145			H 146			H 147		
bit	SYMBOL	CONTENT	bit	SYMBOL	CONTENT	bit	SYMBOL	CONTENT	bit	SYMBOL	CONTENT
0	X1A0		0	X1A8		0	X1B0		0	X1B8	
1	X1A1		1	X1A9		1	X1B1		1	X1B9	
2	X1A2		2	X1AA		2	X1B2		2	X1BA	
3	X1A3		3	X1AB		3	X1B3		3	X1BB	
4	X1A4		4	X1AC		4	X1B4		4	X1BC	
5	X1A5		5	X1AD		5	X1B5		5	X1BD	
6	X1A6		6	X1AE		6	X1B6		6	X1BE	
7	X1A7		7	X1AF		7	X1B7		7	X1BF	

H 148			H 149			H 14A			H 14B		
bit	SYMBOL	CONTENT	bit	SYMBOL	CONTENT	bit	SYMBOL	CONTENT	bit	SYMBOL	CONTENT
0	X1C0		0	X1C8		0	X1D0		0	X1D8	
1	X1C1		1	X1C9		1	X1D1		1	X1D9	
2	X1C2		2	X1CA		2	X1D2	FPIT.N	2	X1DA	
3	X1C3		3	X1CB		3	X1D3		3	X1DB	
4	X1C4		4	X1CC		4	X1D4	FZRN.N	4	X1DC	
5	X1C5		5	X1CD		5	X1D5	FCST.N	5	X1DD	
6	X1C6		6	X1CE		6	X1D6	FESP.N	6	X1DE	
7	X1C7		7	X1CF		7	X1D7	FSBK.N	7	X1DF	

H 14C			H 14D			H 14E			H 14F		
bit	SYMBOL	CONTENT	bit	SYMBOL	CONTENT	bit	SYMBOL	CONTENT	bit	SYMBOL	CONTENT
0	X1E0	IHST.N	0	X1E8		0	X1F0	U00.N	0	X1F8	U08.N
1	X1E1		1	X1E9		1	X1F1	U01.N	1	X1F9	U09.N
2	X1E2		2	X1EA		2	X1F2	U02.N	2	X1FA	U0A.N
3	X1E3		3	X1EB		3	X1F3	U03.N	3	X1FB	U0B.N
4	X1E4		4	X1EC		4	X1F4	U04.N	4	X1FC	U0C.N
5	X1E5		5	X1ED		5	X1F5	U05.N	5	X1FD	U0D.N
6	X1E6		6	X1EE		6	X1F6	U06.N	6	X1FE	U0E.N
7	X1E7		7	X1EF		7	X1F7	U07.N	7	X1FF	U0F.N

INDEX NUMBER
SHEET LINE

DRN. BY K.Ishizu DATE 87.12.24
CHK'D BY HS DATE 88.1.25

Mazak
YAMAZAKI MAZAK CORPORATION

TITLE VQC-15/40 INPUT (4) (NC → PC)

CONTROL M2V
DRAWING NO. 4240481165
SHEET ___ OF ___
SIZE 3

DRAWING NO. 4240481165
SHEET ___ OF ___

H 160			H 161			H 162			H 163		
bit	SYMBOL	CONTENT	bit	SYMBOL	CONTENT	bit	SYMBOL	CONTENT	bit	SYMBOL	CONTENT
0	X0C0*	RST.B	0	X0C8	+X.B	0	X0D0	AUT.B	0	X0D8	CST.B
1	X0C1	SOVRU.B	1	X0C9	-X.B	1	X0D1	MDI.B	1	X0D9	FHD.B
2	X0C2	SOVRD.B	2	X0CA	+Y.B	2	X0D2	RT.B	2	X0DA	ZP.B
3	X0C3	FOVRU.B	3	X0CB	-Y.B	3	X0D3	J.B	3	X0DB	TPS.B
4	X0C4	FOVRD.B	4	X0CC	+Z.B	4	X0D4	ZP1.B	4	X0DC	VFC.B
5	X0C5	OTR.B	5	X0CD	-Z.B	5	X0D5	ZP2.B	5	X0DD	
6	X0C6		6	X0CE	+4.B	6	X0D6	HS1.B	6	X0DE	RDEC.B
7	X0C7		7	X0CF		7	X0D7	HS10.B	7	X0DF	

H 164			H 165			H 166			H 167		
bit	SYMBOL	CONTENT	bit	SYMBOL	CONTENT	bit	SYMBOL	CONTENT	bit	SYMBOL	CONTENT
0	X0E0	SST.B	0	X0E8	ATCSP.B	0	X0F0	PRG.B	0	X0F8	
1	X0E1	SSP.B	1	X0E9	CL.B	1	X0F1	HY.B	1	X0F9	
2	X0E2	SJOG.B	2	X0EA	F1.B	2	X0F2		2	X0FA	
3	X0E3	SREV.B	3	X0EB	F2.B	3	X0F3	HZ.B	3	X0FB	
4	X0E4		4	X0EC	F3.B	4	X0F4	H4.B	4	X0FC	
5	X0E5		5	X0ED		5	X0F5		5	X0FD	
6	X0E6		6	X0EE		6	X0F6		6	X0FE	
7	X0E7		7	X0EF		7	X0F7	HX.B	7	X0FF	

H			H			H			H		
bit	SYMBOL	CONTENT	bit	SYMBOL	CONTENT	bit	SYMBOL	CONTENT	bit	SYMBOL	CONTENT
0			0			0			0		
1			1			1			1		
2			2			2			2		
3			3			3			3		
4			4			4			4		
5			5			5			5		
6			6			6			6		
7			7			7			7		

H			H			H			H		
bit	SYMBOL	CONTENT	bit	SYMBOL	CONTENT	bit	SYMBOL	CONTENT	bit	SYMBOL	CONTENT
0			0			0			0		
1			1			1			1		
2			2			2			2		
3			3			3			3		
4			4			4			4		
5			5			5			5		
6			6			6			6		
7			7			7			7		

INDEX NUMBER

SHEET | LINE

DRN. BY K.Hirata DATE 6.6.1989
CHK'D BY HS DATE 6.6.1989

Mazak
YAMAZAKI MAZAK CORPORATION

TITLE VQC-15/40 INPUT (5) KEY SWITCH DATA (NC OPERATING BOARD → PC.)

CONTROL MZV
DRAWING NO. 4240481166
SHEET ___ OF ___
SIZE 3

SHEET | LINE
INDEX NUMBER

DRAWING NO. 4240481166
SHEET ___ OF ___

H 200			H 208			H 210			H 218		
byte	SYMBOL	CONTENT	byte	SYMBOL	CONTENT	byte	SYMBOL	CONTENT	byte	SYMBOL	CONTENT
0	D00 LOW		0	D04 LOW		0	D08 LOW		0	D12 LOW	
1	UP		1	UP		1	UP		1	UP	
2	D01 LOW		2	D05 LOW		2	D09 LOW		2	D13 LOW	
3	UP		3	UP		3	UP		3	UP	
4	D02 LOW		4	D06 LOW		4	D10 LOW		4	D14 LOW	
5	UP		5	UP		5	UP		5	UP	
6	D03 LOW		6	D07 LOW		6	D11 LOW		6	D15 LOW	
7	UP		7	UP		7	UP		7	UP	

H 220			H 228			H 230			H 238		
byte	SYMBOL	CONTENT	byte	SYMBOL	CONTENT	byte	SYMBOL	CONTENT	byte	SYMBOL	CONTENT
0	D16 LOW		0	D20 LOW		0	D24 LOW		0	D28 LOW	
1	UP		1	UP		1	UP		1	UP	
2	D17 LOW		2	D21 LOW		2	D25 LOW		2	D29 LOW	
3	UP		3	UP		3	UP		3	UP	
4	D18 LOW		4	D22 LOW		4	D26 LOW		4	D30 LOW	
5	UP		5	UP		5	UP		5	UP	
6	D19 LOW		6	D23 LOW		6	D27 LOW		6	D31 LOW	
7	UP		7	UP		7	UP		7	UP	

H 240			H 248			H 250			H 258		
byte	SYMBOL	CONTENT	byte	SYMBOL	CONTENT	byte	SYMBOL	CONTENT	byte	SYMBOL	CONTENT
0	D32 LOW		0	D36 LOW		0	D40 LOW		0	D44 LOW	
1	UP		1	UP		1	UP		1	UP	
2	D33 LOW		2	D37 LOW		2	D41 LOW		2	D45 LOW	
3	UP		3	UP		3	UP		3	UP	
4	D34 LOW		4	D38 LOW		4	D42 LOW		4	D46 LOW	
5	UP		5	UP		5	UP		5	UP	
6	D35 LOW		6	D39 LOW		6	D43 LOW		6	D47 LOW	
7	UP		7	UP		7	UP		7	UP	

H 260			H 268			H 270			H 278		
byte	SYMBOL	CONTENT	byte	SYMBOL	CONTENT	byte	SYMBOL	CONTENT	byte	SYMBOL	CONTENT
0	D48 LOW		0	D52 LOW		0	D56 LOW		0	D60 LOW	
1	UP		1	UP		1	UP		1	UP	
2	D49 LOW		2	D53 LOW		2	D57 LOW		2	D61 LOW	
3	UP		3	UP		3	UP		3	UP	
4	D50 LOW		4	D54 LOW		4	D58 LOW		4	D62 LOW	
5	UP		5	UP		5	UP		5	UP	
6	D51 LOW		6	D55 LOW		6	D59 LOW		6	D63 LOW	
7	UP		7	UP		7	UP		7	UP	

INDEX NUMBER

SHEET LINE

DRW. BY Kikuchi DATE Oct.5.'87
CHK'D BY HS DATE Nov.4.'87

Mazak
YAMAZAKI MAZAK CORPORATION

TITLE VQC-15/40
DATA REGISTER (1)

CONTROL MZV
DRAWING NO. 4240481167
SHEET ___ OF ___
SIZE 3

SHEET LINE
INDEX NUMBER

DRAWING NO. 4240481167
SHEET ___ OF ___

H280			H288			H290			H298		
byte	SYMBOL	CONTENT	byte	SYMBOL	CONTENT	byte	SYMBOL	CONTENT	byte	SYMBOL	CONTENT
0	D64 LOW		0	D68 LOW		0	D72 LOW		0	D76 LOW	
1	UP		1	UP		1	UP		1	UP	
2	D65 LOW		2	D69 LOW		2	D73 LOW		2	D77 LOW	
3	UP		3	UP		3	UP		3	UP	
4	D66 LOW		4	D70 LOW		4	D74 LOW		4	D78 LOW	
5	UP		5	UP		5	UP		5	UP	
6	D67 LOW		6	D71 LOW		6	D75 LOW		6	D79 LOW	
7	UP		7	UP		7	UP		7	UP	

H2A0			H2A8			H2B0			H2B8		
byte	SYMBOL	CONTENT	byte	SYMBOL	CONTENT	byte	SYMBOL	CONTENT	byte	SYMBOL	CONTENT
0	D80 LOW	SQ0	0	D84 LOW	SQ4	0	D88 LOW		0	D92 LOW	
1	UP		1	UP		1	UP		1	UP	
2	D81 LOW	SQ1	2	D85 LOW	SQ5	2	D89 LOW		2	D93 LOW	
3	UP		3	UP		3	UP		3	UP	
4	D82 LOW	SQ2	4	D86 LOW	SQF	4	D90 LOW		4	D94 LOW	
5	UP		5	UP		5	UP		5	UP	
6	D83 LOW	SQ3	6	D87 LOW		6	D91 LOW		6	D95 LOW	
7	UP		7	UP		7	UP		7	UP	

H			H			H			H		
bit	SYMBOL	CONTENT	bit	SYMBOL	CONTENT	bit	SYMBOL	CONTENT	bit	SYMBOL	CONTENT
0			0			0			0		
1			1			1			1		
2			2			2			2		
3			3			3			3		
4			4			4			4		
5			5			5			5		
6			6			6			6		
7			7			7			7		

H			H			H			H		
bit	SYMBOL	CONTENT	bit	SYMBOL	CONTENT	bit	SYMBOL	CONTENT	bit	SYMBOL	CONTENT

DRAWING NO. 4240431168
SHEET ____ OF ____

INDEX NUMBER
SHEET LINE
DRN. BY Kikuchi DATE Feb.15.'84
CHK'D BY H.S. DATE Mar.1.'85
Mazak YAMAZAKI MAZAK CORPORATION
TITLE VOC-15/40 DATA REGISTER (2)
CONTROL MZV
DRAWING NO. 4240481168
SHEET ____ OF ____
SIZE 3
SHEET LINE
INDEX NUMBER

ELEMENTARY DIAGRAM LIST

SHEET	TITLE	DRAWING NO.
01	ENCLOSURE OF ELECTRICAL CONTROL CABINET LAYOUT	4243081301 1/3-3/3
02	OPERATING PANEL BOX LAYOUT	1681302
03	POWER CONTROL PANEL LAYOUT	0481303
04	TERMINAL UNIT LAYOUT	3081304
05	RELAY CARD LAYOUT & CABLE CONNECTION	305A △A
07	RELAY CARD CONNECTION DIAGRAM (1)	307
08	do. (2)	308A △A
09	SSR BOARD DETAIL	1681309
10	CABLE CONNECTION DIAGRAM COMPONENTS ENCLOSURE CABINET	3081310
11	CABLE CONNECTION CRT UNIT	1681311
12	CABLE CONNECTION DIAGRAM	3081312
14	TERMINAL BLOCKS LAYOUT TB6, TB7	3081314
21	DETAILS OF TERMINAL UNIT CONNECTION (1)	3081321
22	do. (2)	322
23	do. (3)	323
24	do. (4)	324
25	do. (5)	325
30	PLANE VIEW COMPONENTS LAYOUT (1)	3081330
31	FRONT SIDE VIEW (2)	331A △A
32	LEFT SIDE VIEW (3)	332
33	REAR SIDE VIEW (4)	333
34	RIGHT SIDE VIEW (5)	334A △A
36	TERMINAL BLOCK LAYOUT TB62	1381336
37	CONNECTION SYSTEM DIAGRAM	3081337A △A
38	do.	3081338 A4/6 1/3-3/3 5/6 △A

INDEX NUMBER

SHEET | LINE

△A DRAWING NO. CHANGE NOV 1 '91 AIWA

APPROVED

DESIGNED K. Ishiwa

DRAWN

Mazak
YAMAZAKI MAZAK CORPORATION

TITLE VQC/S/4D ELECTRICAL CONTROL LAYOUT & CONNECTION

CONTROL MAZATROL

DRAWING NO. 4243081300 A

SHEET 1 OF 3

SIZE 3

SHEET | LINE

INDEX NUMBER

DRAWING NO. 4243081300 A

SHEET 1 OF 3

ELEMENTARY DIAGRAM LIST

SHEET	TITLE	DRAWING NO.	
40	DETAIL DIAGRAM OF MS & MR CONNECTOR WIRE CONNECTION	4243081340 A	A
46	NC TABLE (5PTISN)	3081346 A	A
50	CABLE ASSY (1)	3081350 A	A
51	do. (2)	351 A	A
52	do. (3)	352	
62	CONNECTION SYSTEM DIAGRAM 2PC	1681362	
63	do.	1381363	
65	CANNON CONNECTOR CONNECTION 2PC	1381365	
66	SSR BOARD B DETAIL 2PC	1681366 A	
71	NC TABLE CONNECTION 2PC	3081371 A	A

A DRAWING HE CHANGE

DRAWING NO. 4243081300 A
SHEET 2 OF 3

INDEX NUMBER
SHEET LINE

APPROVED
DESIGNED K. Inoue
DRAWN

Mazak
YAMAZAKI MAZAK CORPORATION

TITLE WQC-15/40
ELECTRICAL CONTROL
LAYOUT & CONNECTION

CONTROL MAZAIRO C
DRAWING NO. 4243081300 A
SHEET 2 OF 3
SIZE 3

SHEET LINE
INDEX NUMBER

ELEMENTARY DIAGRAM LIST

SHEET	TITLE	DRAWING NO.
91	CPU LINK CONNECTION (OPTION)	424168139 1/2-2/2

DRAWING NO.
424308130C
SHEET 3 OF 3

INDEX NUMBER
SHEET LINE

APPROVED
DESIGNED K. Ohme
DRAWN

Mazak
YAMAZAKI MAZAK CORPORATION

TITLE VCC-15/40
ELECTRICAL CONTROL
LAYOUT & CONNECTION

CONTROL MAZATROL
DRAWING NO 424308130C
SHEET 3 OF 3
SIZE 3

SHEET LINE
INDEX NUMBER

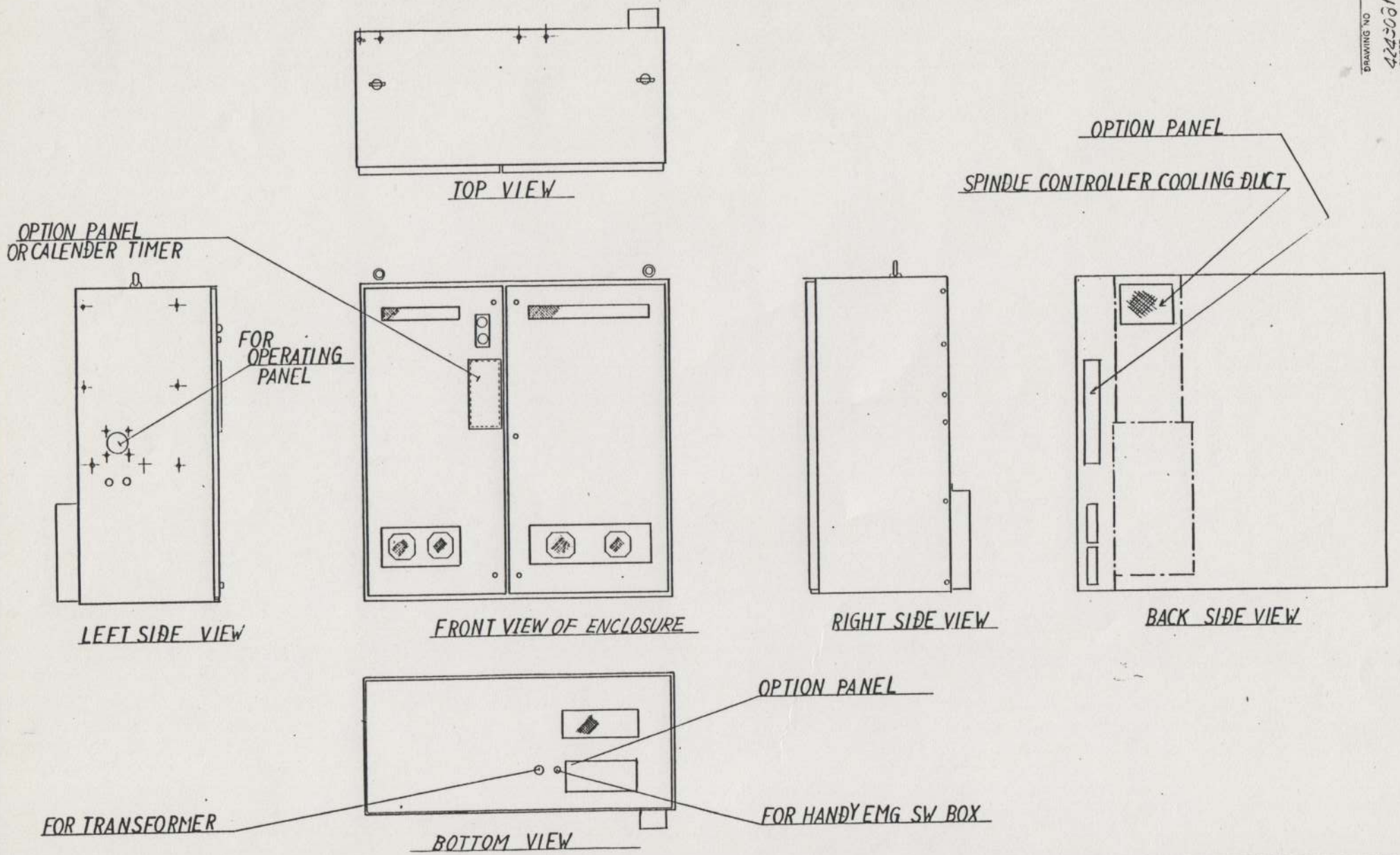

DRAWING NO 4243081301 SHEET OF

APPROVED	DESIGNED K.Iwan	DRAWN	Mazak YAMAZAKI MAZAK CORPORATION	TITLE VQC-15/40 CABINET LAYOUT	CONTROL MAZATROL DRAWING NO. 4243081301 SHEET 1 OF 3	SIZE 3	

INDEX NUMBER LINE SHEET

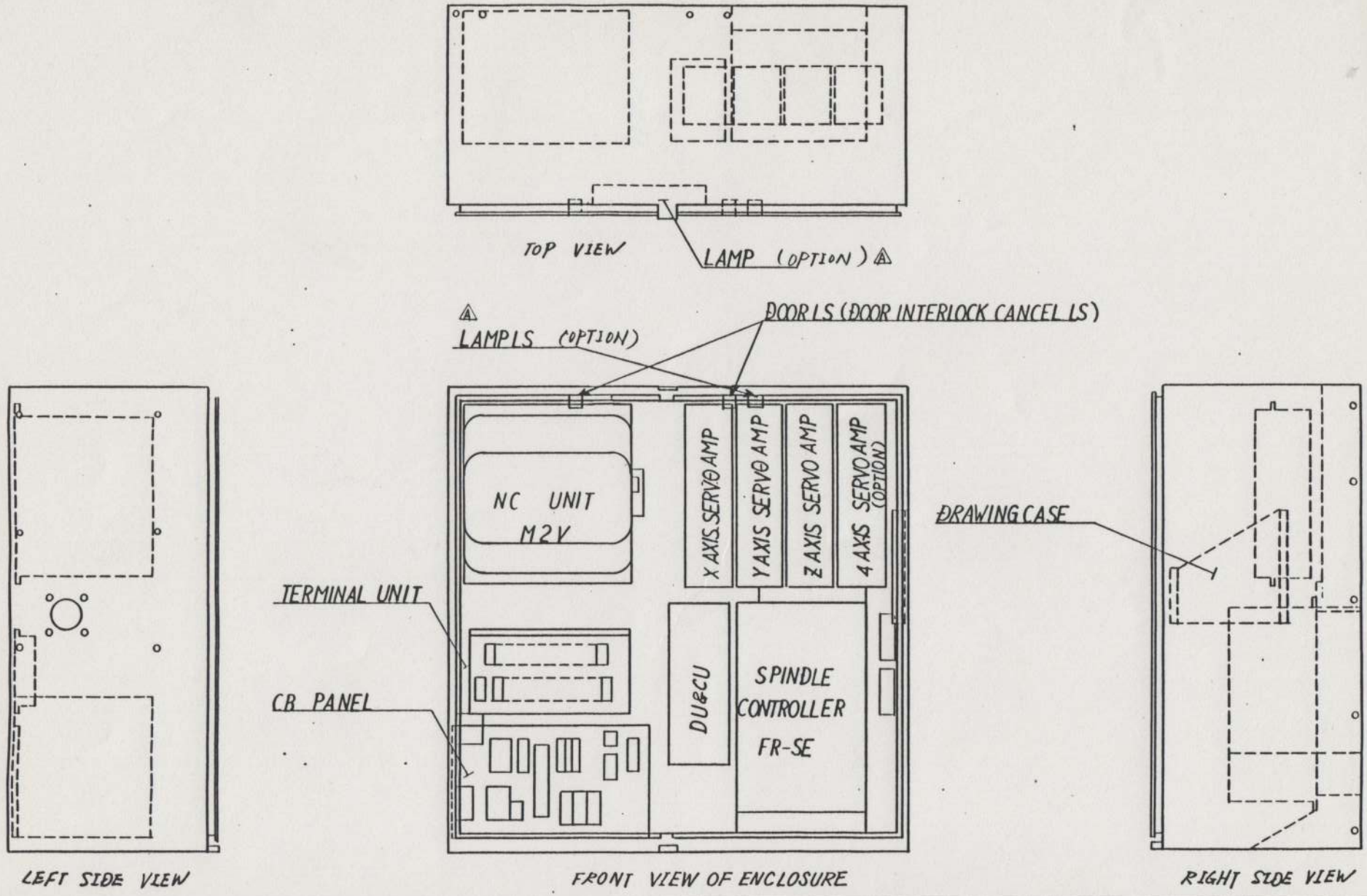

DRAWING NO. 424 3081301A SHEET 2 OF 3

⚠ INNER DOOR LAMP OPTION NOV. 15 '86 Y.N

DRN. BY K.M
DATE Jl.10.'85
CHK'D BY HKS
DATE Aug 8 '85

Mazak
YAMAZAKI MAZAK CORPORATION

TITLE VQC-15/40 CABINET LAYOUT

CONTROL M2V
DRAWING NO. 424 3081301A
SHEET 2 OF 3
SIZE 3

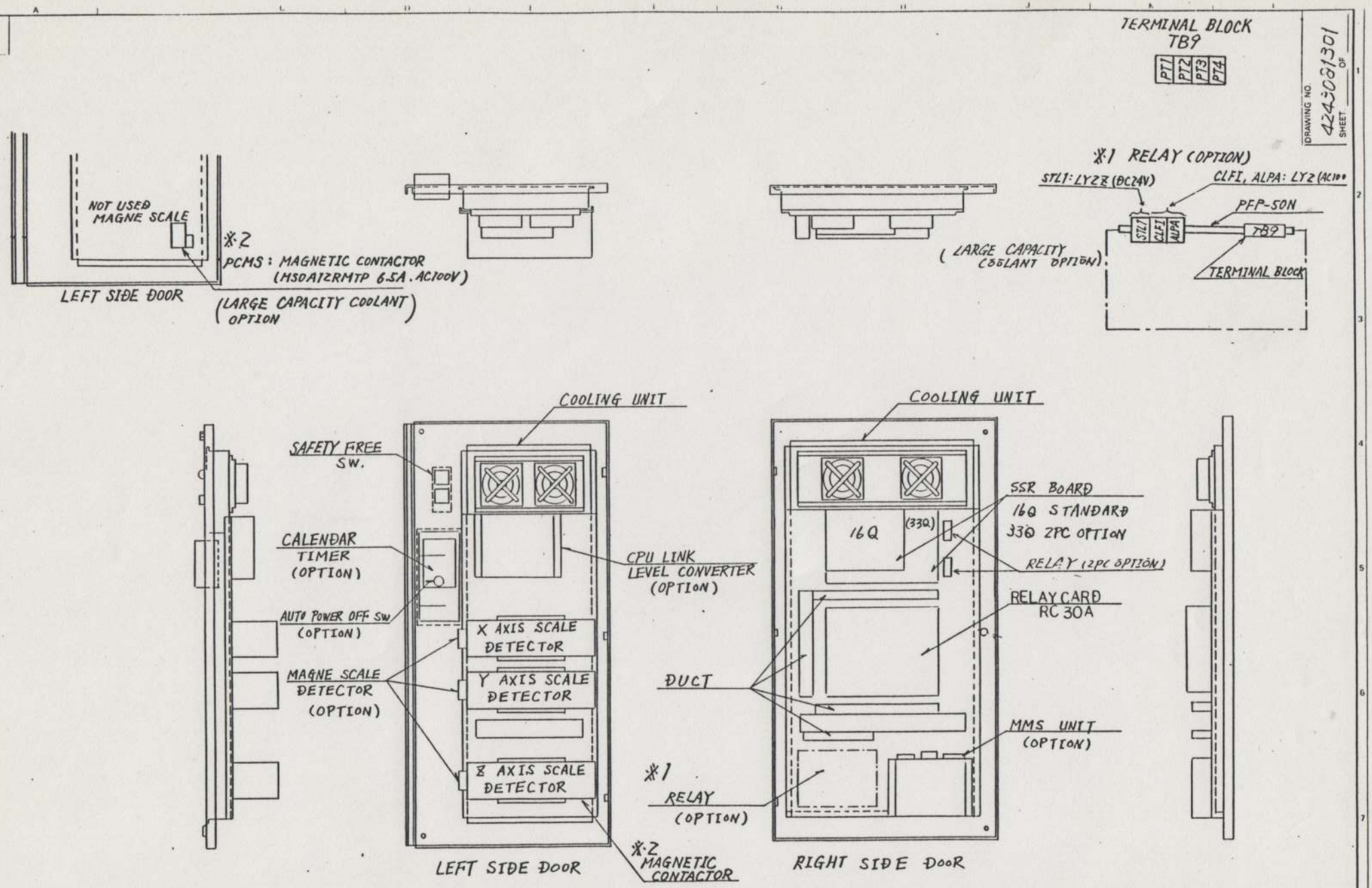

INDEX NUMBER	LINE	APPROVED	DESIGNED	DRAWN	TITLE	CONTROL	DRAWING NO.	SIZE
SHEET	01 02 03 04 05 06 07 08 09 10 11 12 13 14 15 16 17 18 19 20 21 22 23 24 25 26 27 28 29 30 31 32 33 34 35 36 37 38 39 40 41 42 43 44 45 46 47 48 49 50 51 52		K. Nimi		VQC15/40 CABINET LAYOUT	MAZATROL	4243081301 SHEET 3 OF 3	3

Mazak
YAMAZAKI MAZAK CORPORATION

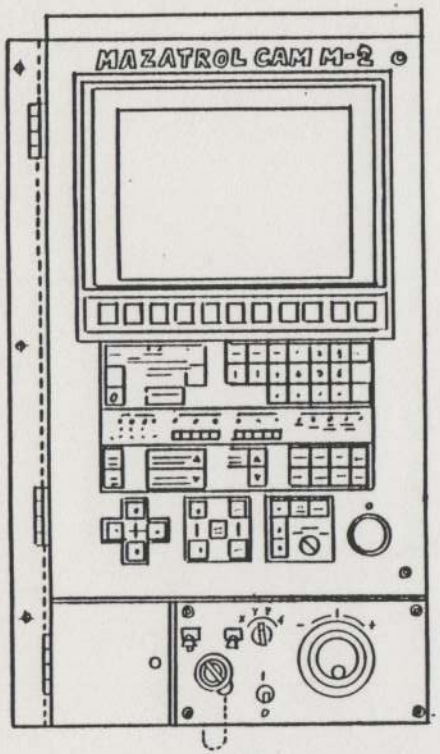

FRONT VIEW OF OP. BOX

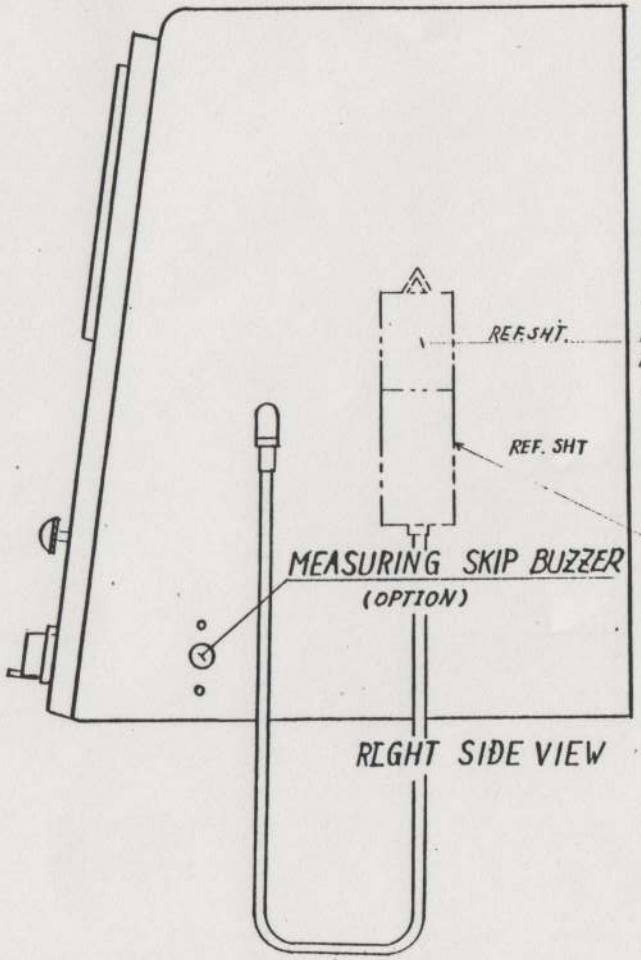

RIGHT SIDE VIEW

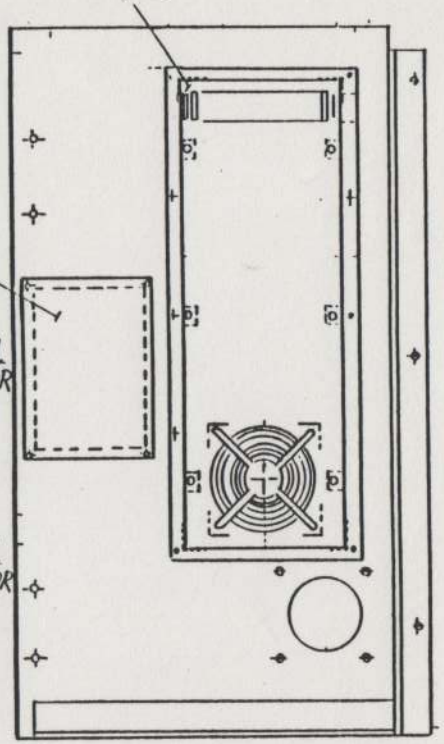

REAR VIEW OF OP. BOX

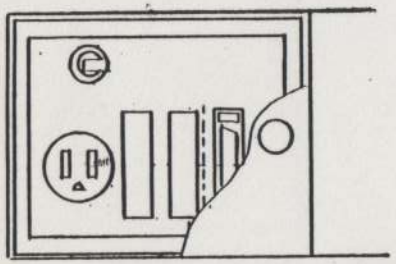

CMT MDS & PTR/PTP I/F VIEW

DRAWING NO. 424168 1302 SHEET ___ OF ___

DRN BY T. Okuda
DATE Jan. 17. 86.
CHK'D BY [illegible]
DATE May. 13. 86

Mazak
YAMAZAKI MAZAK CORPORATION

TITLE VQC-15/40
OPERATING
PANEL BOX

CONTROL M2V
DRAWING NO. 424168 1302
SHEET ___ OF ___
SIZE 3

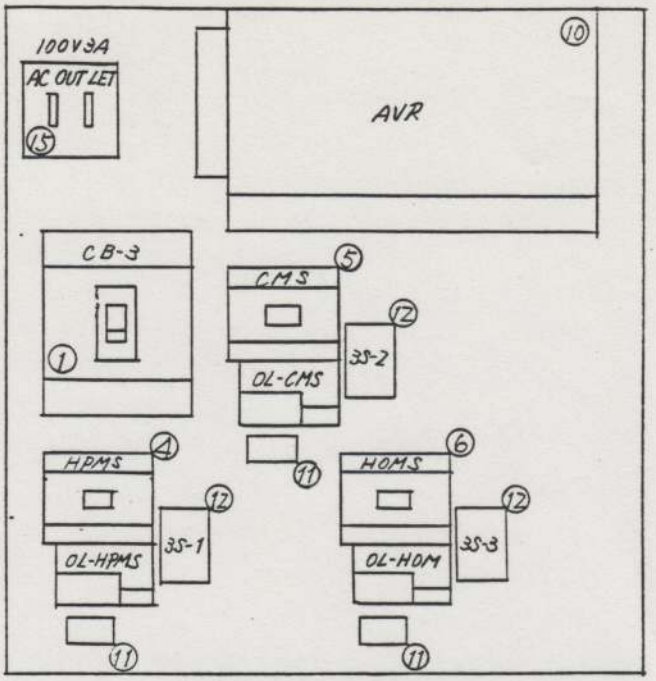

LEFT SIDE CB PANEL

TB-4

146
144
60
59
EMG
MAR
149
+24V
0G
P24
P24
P24A
G24
G24
G

TB-5

CH2
CH4
10
16
16
15A
15
21B
21
XB
XB
XA
XA1
OHT1
OHT2
34
35
36

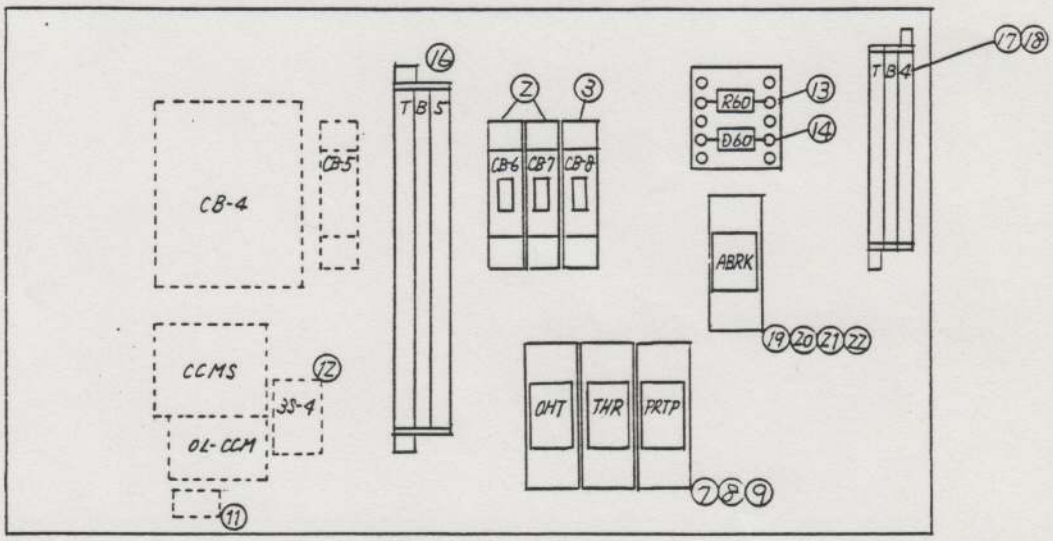

FRONT CB PANEL

	CATALOG NO.	PARTS NO.			
1	NF30CB 3P 15A		15	WK-3001	D55MB000020
2	CP-B1PA2B-M10A 1b	D51MA003070	16	TE-K2-20S	D53MA002690
3	CP-B1PA2B-M03A 1b	D51MA003080	17	TE-K1.25-3S	
4	MS0A12RMTP-AC100V.65A	D01MA033160	18	TE-K1.25-12S	D53MA000580
5	MS0A12RMTP-AC100V1.7A	D01MA033121	19	LYZZ-DC24V	D04TC000420
6	MS0A12RMTP-AC100V1.2A	D01MA033111	20	PTF08A	D04TC000141
7	G2A-432A-AC100V	D04TC000020	21	PYC-A1	D04TC001170
8	PYF14-A	D04TC000181	22	SR1FM4	D34MA000270
9	PYC-A2	D04TC001180			
10	EC-11-24 DC24V4.5A	D50NW000340			
11	AU1201	D43PA000560			
12	3CRH-30330	D43PA000520			
13	KNP6W220HM	D30MP001020			
14	SR3AM-8	D34MA000470			

DRAWING NO. 4240481303
SHEET ____ OF ____

INDEX NUMBER
SHEET LINE

DRN. BY K.K. 1.1.5
DATE 84.12.24
CHK'D BY H.I.
DATE May 1.85

Mazak
YAMAZAKI MAZAK CORPORATION

TITLE VQC-15/40 POWER CONTROL PANEL LAYOUT

CONTROL MZV
DRAWING NO. 4240481303
SHEET ____ OF ____
SIZE 3

SHEET LINE
INDEX NUMBER

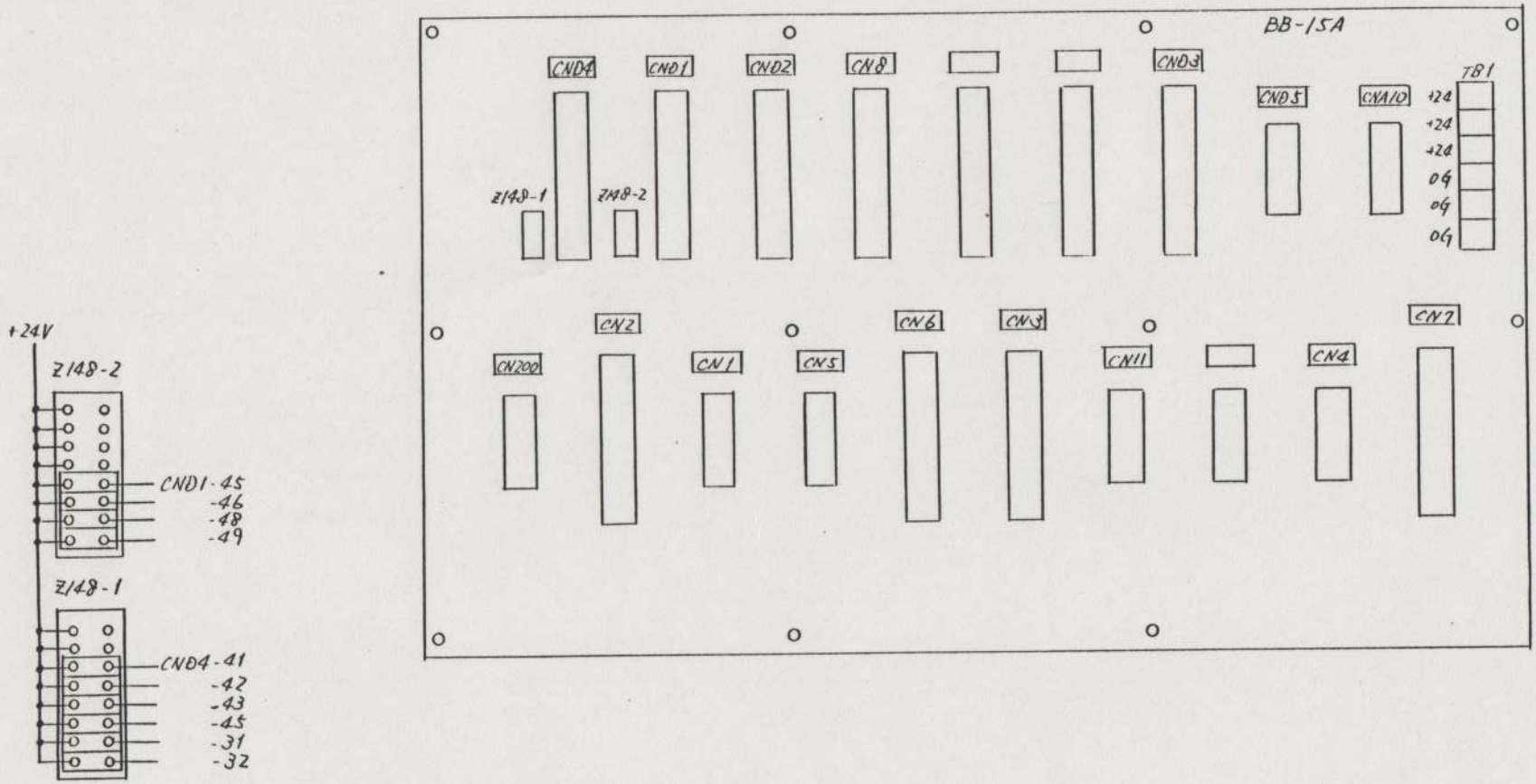

DRAWING NO 4243081304 SHEET OF

APPROVED	DESIGNED	DRAWN	Mazak YAMAZAKI MAZAK CORPORATION	TITLE VQC/5/40 TERMINAL UNIT LAYOUT	CONTROL MAZATROL DRAWING NO. 4243081304 SHEET OF	SIZE 3	
	K. Nizuma						

INDEX NUMBER LINE SHEET

CN3 (MR-50)	
1	*ESP
2	141
3	142
4	143
5	
6	
7	
8	OS
9	SET
10	SET
11	SRN
12	SRI
13	
14	ORC1
15	TL1 (OSP21)
16	
17	
18	
19	
20	
21	
22	
23	
24	
25	
26	
27	
28	
29	
30	
31	
32	
33	ORC2
34	
35	WIAL
36	390
37	+LY
38	-LZ
39	147
40	SP2
41	SP3
42	SP4
43	SP5
44	
45	
46	
47	
48	
49	+24V
50	+24V

CN301A (MR-50RMD2)	
1	CYFIN
2	M44T
3	M43T
4	M45T
5	
6	
7	SA
8	WL
9	SSET
10	CTL (OSP19)
11	OTR
12	+LY2
13	-LZ2
14	
15	
16	
17	+24V
18	TAPC (OSP21)
19	MMAL
20	PW1
21	P24
22	EMF
23	341
24	RSP2
25	
26	ZS1
27	SFR
28	SRV
29	SMR
30	ORCM1
31	MAR2
32	
33	TCME
34	NSPT
35	
36	
37	381
38	
39	355
40	
41	OG
42	OG
43	OG
44	OG
45	
46	OG
47	OG
48	
49	
50	RSP3

(OSP19)

RELAY CARD (RC3A)

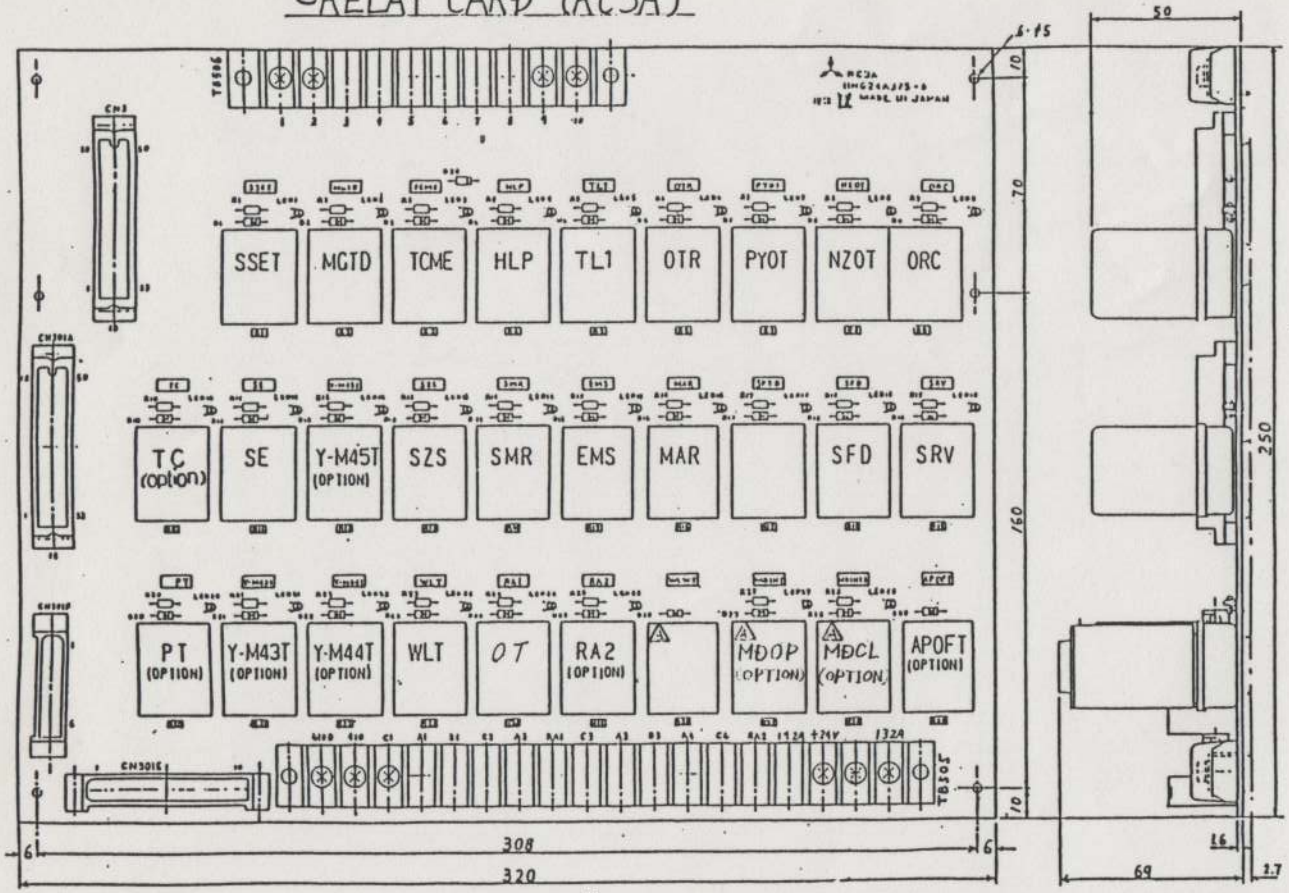

TB506 (MTB9-10P)		
1	(EMR)	REF SHT.437
2	(+24A)	REF. SHT.491 492
3	(84)	
4	(81)	REF. SHT. 492
5	(83)	
6	-LZ	-ZOT
7	-LZA	-ZOT
8	129	
9	132B	
10		

TB505 (MTB9-18P)
410D
410
C1
A1
B1
C2
A2
RA1
C3
A3
B3
A4
C4
RA2
142A
+24V
132A

CN301E (SMS10PH-4J)	
1	15
2	25
3	26 (SP)
4	400
5	160
6	161
7	162
8	420
9	21
10	21A

CN301F (SMS06PH-4J)	
1	P24
2	MAR
3	58
4	59
5	G24
6	

DRAWING NO 424308130-5A SHEET ___ OF ___

INDEX NUMBER | LINE | SHEET

⚠ DELETE WLWT TIMER, ADD MDOP AND MDCL RELAY, oct.30.'86

APPROVED	DESIGNED	DRAWN
	K. Nara	

Mazak
YAMAZAKI MAZAK CORPORATION

TITLE: VQC-15/40 RELAY CARD LAYOUT CABLE CONNECTION

CONTROL: MAZATROL
DRAWING NO. 424308130-5A
SHEET ___ OF ___
SIZE 3

LINE | SHEET | INDEX NUMBER

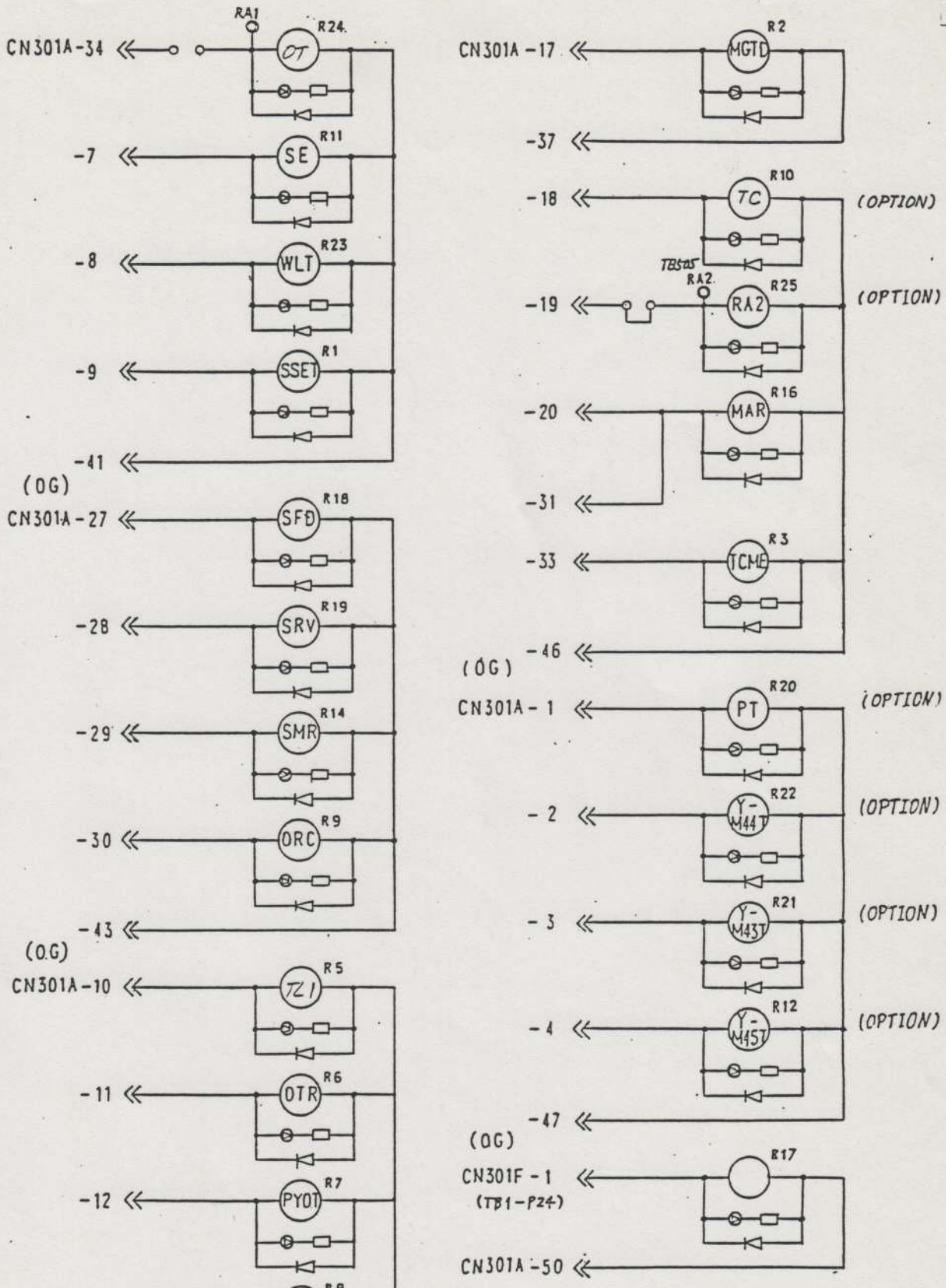

G2A-432A-------- 2
LY2Z ------- 25
H3Y-2 -------- 2
29

* NOTE RELAY No. 5. 10. 17. 28 NOT USE

INDEX NUMBER
SHEET LINE
APPROVED
DESIGNED K. Yiu
DRAWN
Mazak
YAMAZAKI MAZAK CORPORATION
TITLE VQC-15/40 RELAY CARD CONNECTION DIAGRAM
CONTROL MAZAPRO
DRAWING NO. 4243081307
SHEET OF
SIZE 3
SHEET LINE
INDEX NUMBER

DRAWING NO 4243081307
SHEET OF

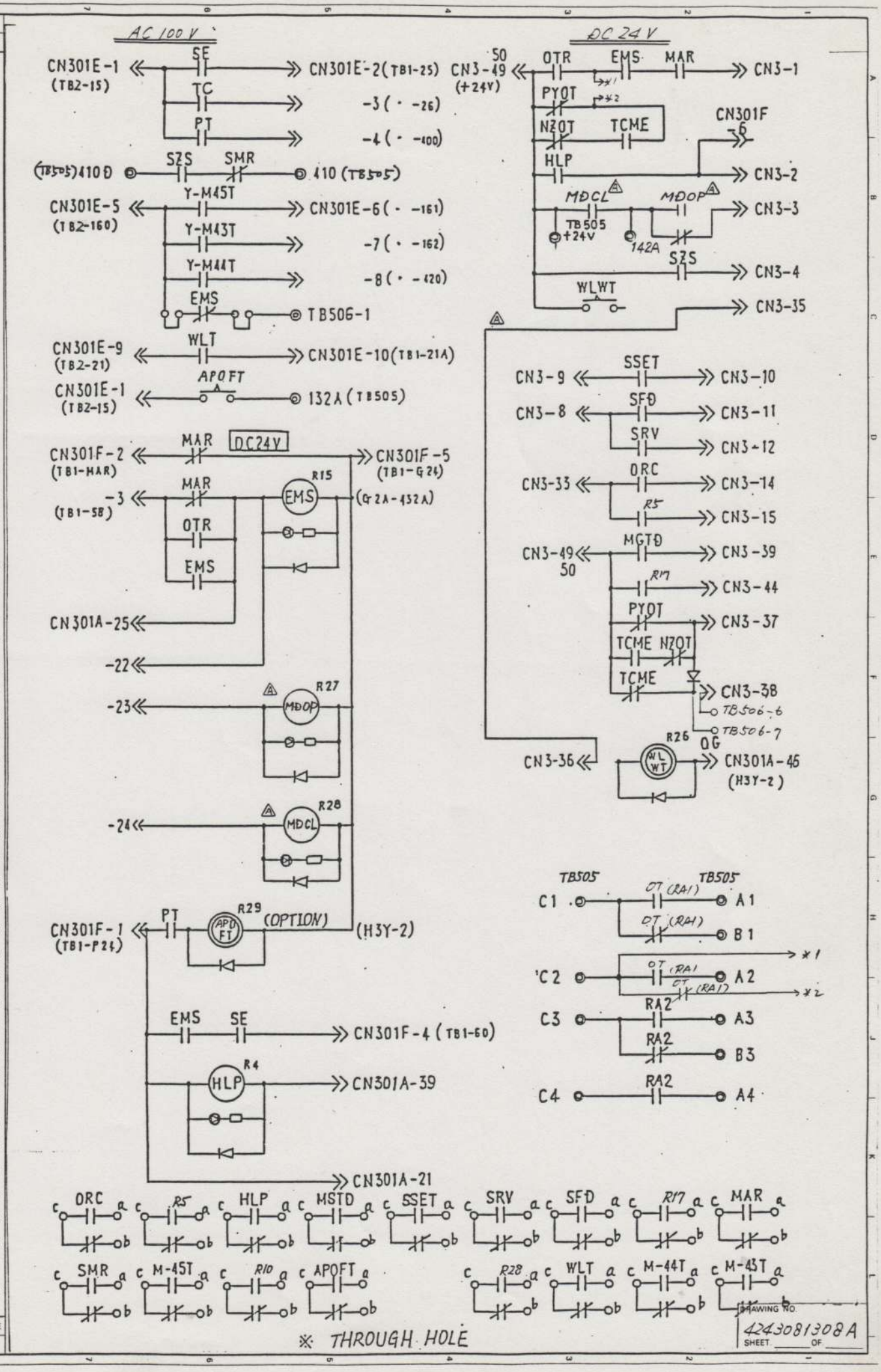

INDEX NUMBER

SHEET | LINE

DELETE THE "WLWT" TIMER AND ADD THE "MDOP", "MDCL" RELAY

Oct. 30, '95 minji

APPROVED

DESIGNED K. Ayoc

DRAWN

Mazak
YAMAZAKI MAZAK CORPORATION

TITLE
VQC15/40
RELAY CARD
CONNECTION DIAGRAM

CONTROL YMZAIPEL

DRAWING NO. 4243081308 A

SHEET 3 OF

SIZE M2V

SHEET | LINE

INDEX NUMBER

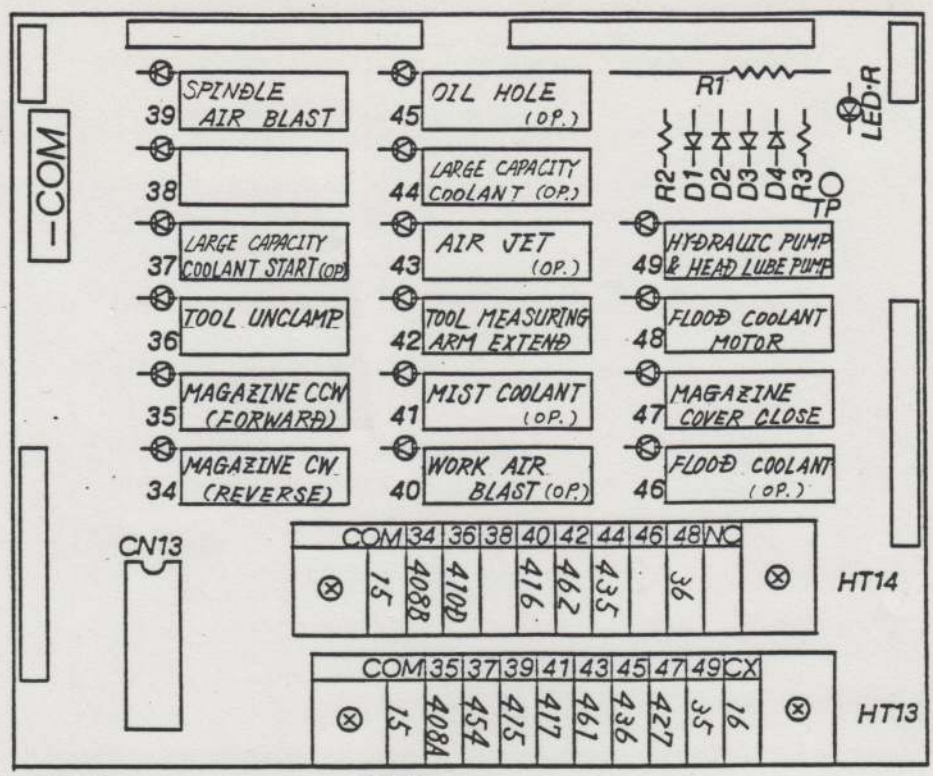

CN13

MR20-RMD

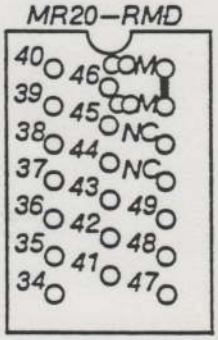

CN13

MR20-LFH

1	2	3	4	5	6	7
708B	708A	710	754	SSP2	715	716
8	9	10	11	12	13	
717	762	761	735	736	SSP3	
14	15	16	17	18	19	20
727	836	835			06	06

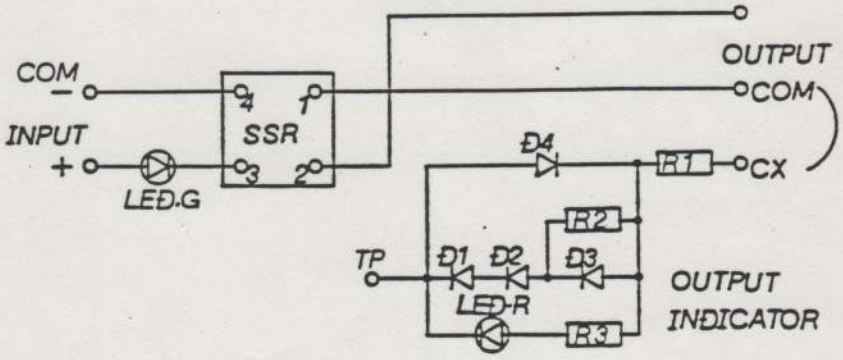

SSR

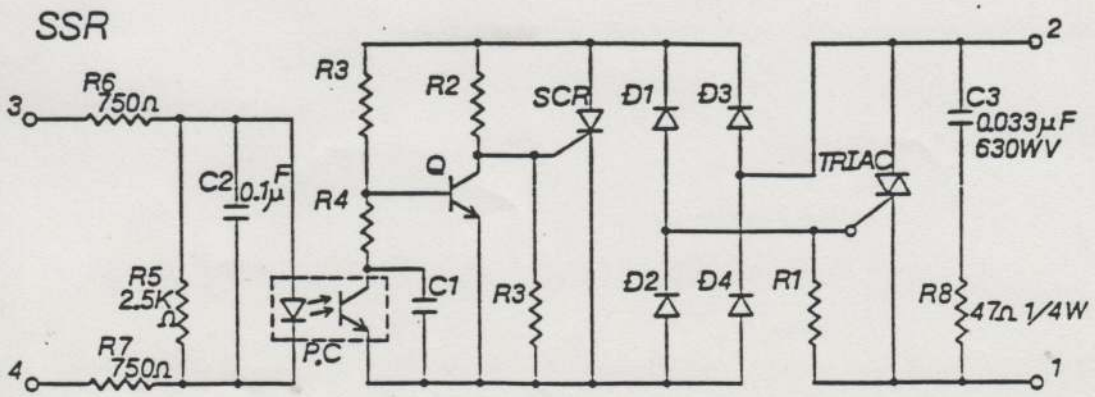

DRAWING NO. 4241681309

SHEET ____ OF ____

INDEX NUMBER

SHEET LINE

DRN. BY Ribuca DATE Mar 26 '85

CHK'D BY ____ DATE ____

Mazak

MAZAK MAZAK CORPORATION

TITLE VQC-15/40 SSR BOARD

CONTROL MAZATROL

DRAWING NO. 4241681309

SIZE A

SHEET 3 LINE

INDEX NUMBER

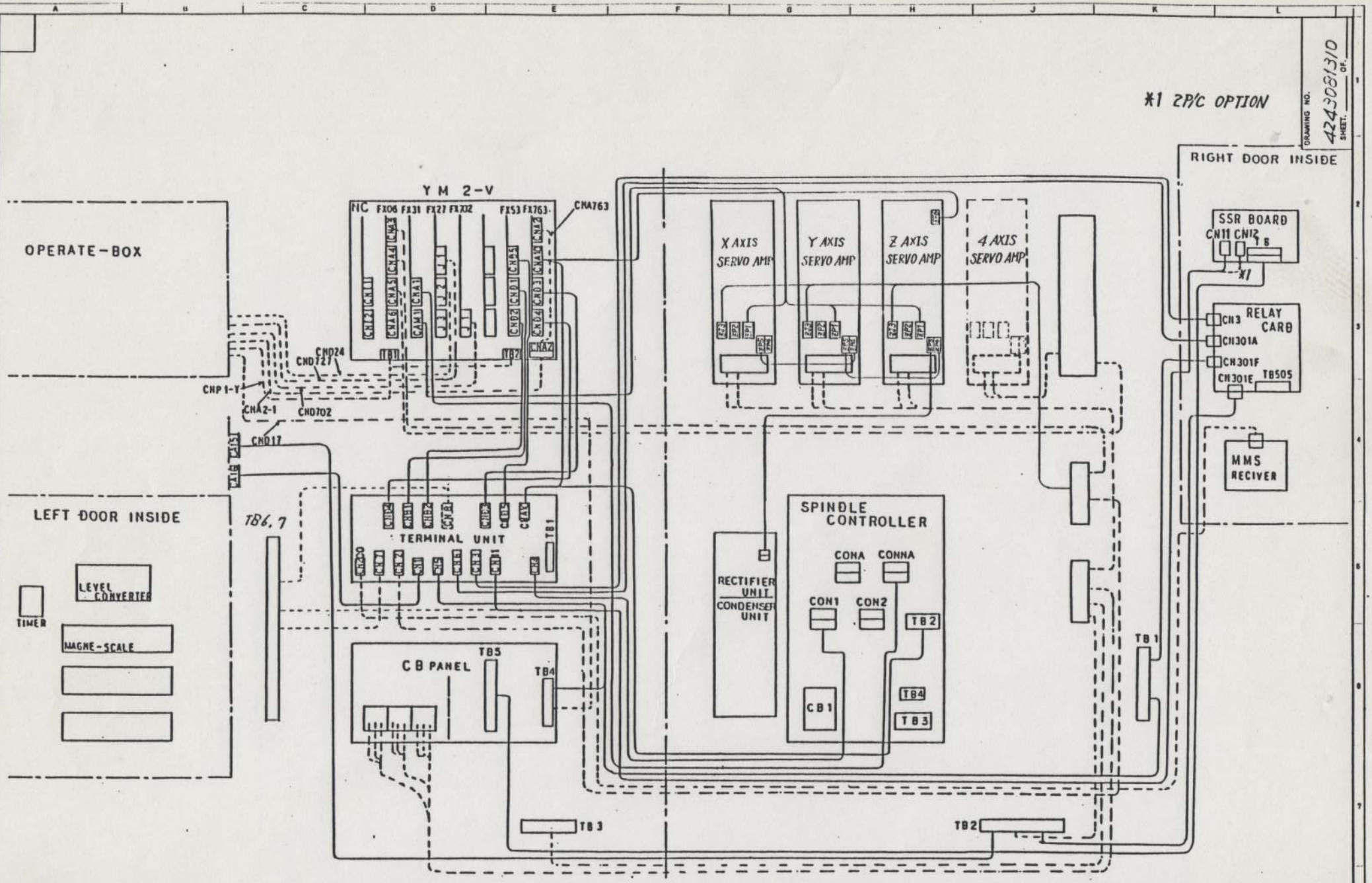

DRN. BY Y. Okada	Mazak YAMAZAKI MAZAK CORPORATION	TITLE VQC-15/40 CABLE CONNECTION DIAGRAM COMPONENTS	CONTROL M2
DATE			DRAWING NO. 4243081310
CHK'D BY			SHEET. OF.
DATE			SIZE 3

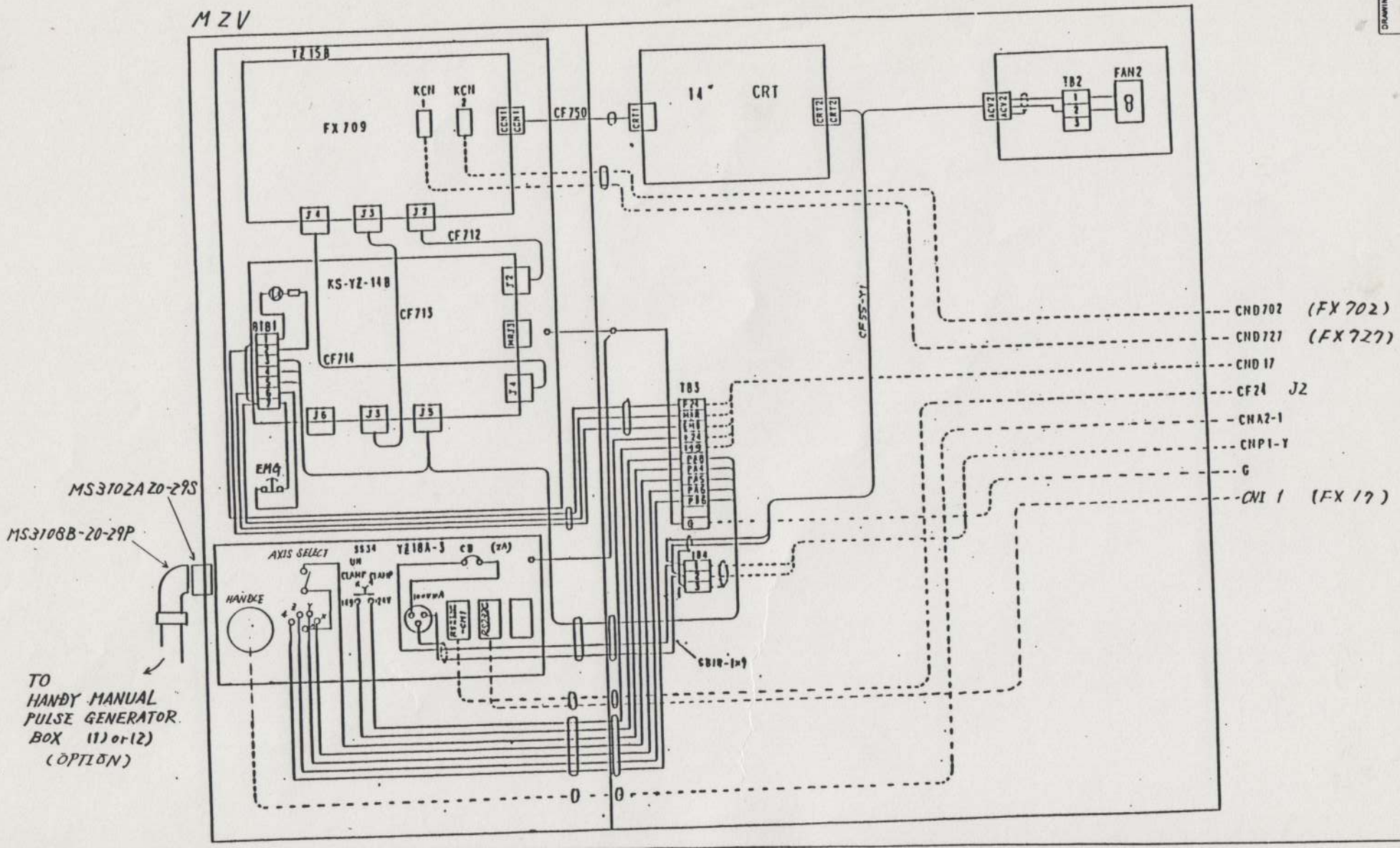

DRAWING NO. 4241681311 SHEET ___ OF ___

DWN. BY Y. Okada
DATE Jan. 17. '86
CHK'D BY
DATE

Mazak
YAMAZAKI MAZAK CORPORATION

TITLE VQC-15/40 CABLE CONNECTION CRT UNIT

CONTROL MZV
DRAWING NO. 4241681311
SHEET ___ OF ___
SIZE 3

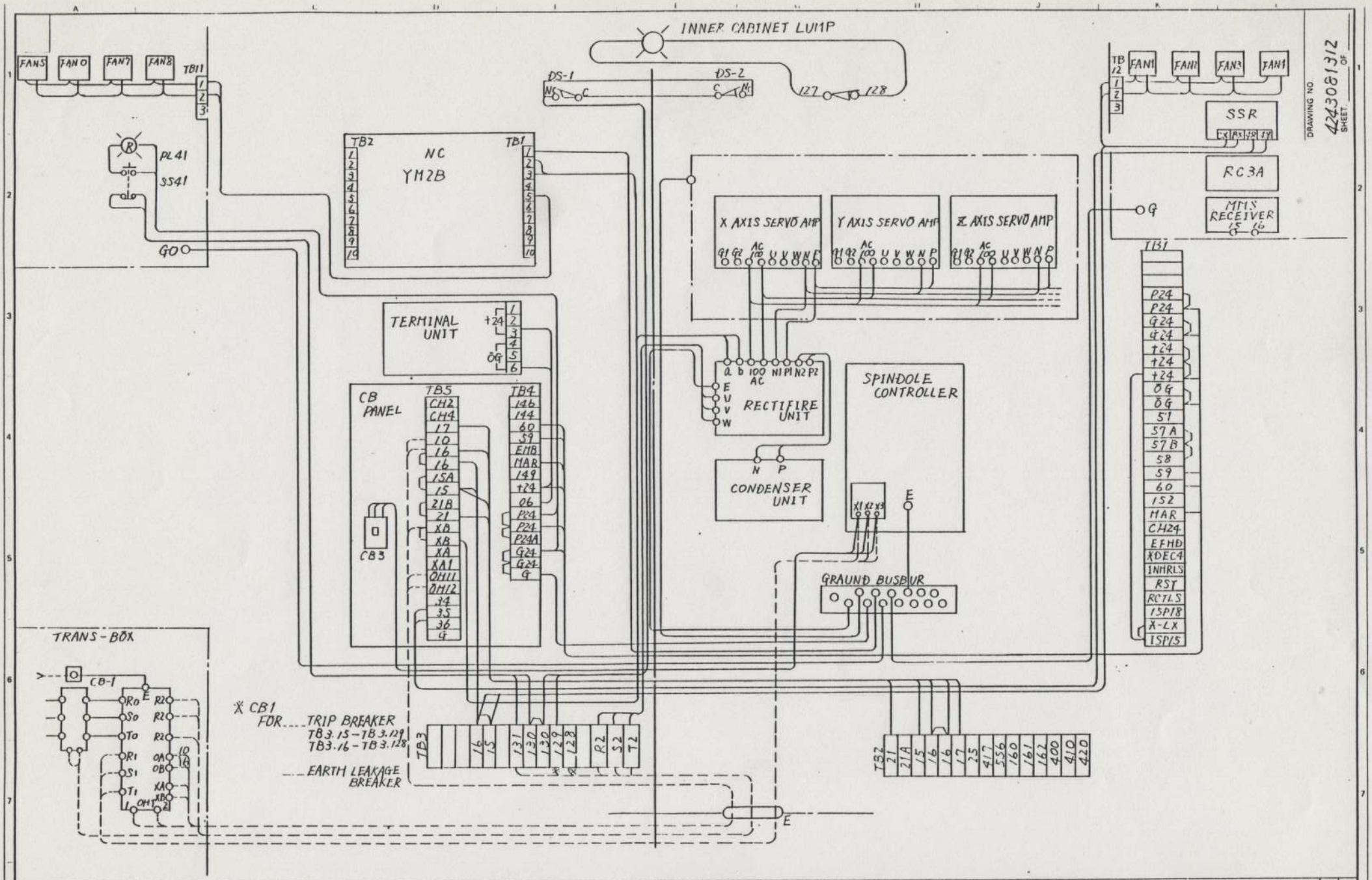

APPROVED	DESIGNED	DRAWN	TITLE	CONTROL	SIZE	SHEET	INDEX NUMBER
	K. Miura	4/10'86 ŌMEGA	VQC-15140 CABLE CONNECTION DIAGRAM	MAZATROL DRAWING NO. 4243081312 SHEET OF	3		

Mazak
YAMAZAKI MAZAK CORPORATION

INDEX NUMBER

SHEET | LINE

TB6 CTL-15 55P

FROM CN7 (OPTION)

EXRST	
INTX	
INTY	
INTZ	
INT4	
ZPX	
ZPY	
ZPZ	
ZP4	
ZPZZ	
PUCCD	
PCLCD	
G24	
MFA	
MF	
M11	
M12	
M14	
M18	
M21	
M22	
M24	
M28	
M31	
M32	
M34	
M38	
EXFIN	
OG	
OG	
RST	
AUTM	
EHDPB	
EHDL	
CSTPB	
CSTL	
MRDY	
OSP18	
ONLN	
ENCOL	
EXAL	
ECST	
EFHD	
ESBK	+24V
EMOP1	+24V
ISP19	

TB7 CTL-15 50P

FROM TB1

57A	
57B	
58	
283	
284	
287	
288	
292	
293	
296	
297	
298	
299	
851	
852	
853	
854	
855	
856	
857	
858	
859	
860	
861	
ENPC	
PCY1	
PCY2	
2063	
2064	
2065	SPARE
2066	SPARE
OG	
OG	
+24V	
+24V	
722A	TO CN12 SSR BOARD
722B	TO CN12 SSR BOARD
724	TO CN12 SSR BOARD
725A	TO CN12 SSR BOARD
725B	TO CN12 SSR BOARD
782A	
782B	
787A	
787B	
1871	
1872	

FROM CN8 (FOR 2 PALLET CHANGER)

TO CA11

DRAWING NO. 424168314A
SHEET ____ OF ____

DRN. BY V. Okawa
DATE Dec 16 '85
CHK'D BY ____
DATE ____

Mazak
YAMAZAKI MAZAK CORPORATION

TITLE VVC15/40 2PC TERMINAL BLOCKS LAYOUT

CONTROL M2V
DRAWING NO. 424168314A
SHEET ____ OF ____
SIZE 3

SHEET | LINE
INDEX NUMBER

CN2

INSIDE CONNEC.	PIN NO.	LINE NO.	OUTSIDE CONNEC.	SIGNAL NAME
	1			
CND 4-47	2	351	TB41 -351	MACHINE POWER SUPPLY
	3			
1-10	4	150	CA17-U	MANUAL MAGAZINE ROTATE
1-40	5	221	" -D	MAGAZINE POSITION 1
1-6	6	222	" -E	" 2
1-19	7	223	" -F	" 4
1-20	8	224	" -G	" 8
1-21	9	225	" -H	" 16
1-4	10	213	" -A	MAGAZINE INPOSITION
4-14	11	218	" -B	MAGAZINE COVER OPEN
4-15	12	219	" -C	MAGAZINE COVER CLOSE
CN6-37	13	381	" -N	MAGZINE TOOL DETECTOR
CN6-12	14	+LYZ	TB41 -LYZ	2nd +Y OVER TRAVEL
CND 1-16	15	*DECX	" -*DECX	X AXIS ZERO RETURN DEC.
1-17	16	*DECY	" -*DECY	Y AXIS ZERO RETERN DEC.
	17	OG	OG	DC 24V - COMMON (NC)
	18	OG	-OG	DC 24V - COMMON (NC)
CND 1-39	19	208	CML3-1	TOOL UNCLAMP
1-24	20	209	" -2	TOOL CLAMP
CN6-13	21	-LZZ	" -6	2nd -Z OVER TRAVEL
CND 1-18	22	*DECZ	" -5	Z AXIS ZERO RETURN DEC.
CN6-39	23	355	" -3	HEAD LUBE PRESSURE
CND 4-26	24	382	" -4	SPINDLE TOOL DETECTOR
4-2	25	2068	CA17-P	MAGAZINE INPOSITION CW
4-36	26	2069	" -R	MAGAZINE MOTOR INPOSITION
1-45	27	*+LX	TB41 *+LX	+X OVER TRAVEL
CN5-11	28	*-LX	" *-LX	-X OVER TRAVEL
CND 1-48	29	*-LY	" *-LY	-Y OVER TRAVEL
1-49	30	*+LZ	" *+LZ	+Z OVER TRAVEL
CN2-32	31	OT	" -OT	OVER TRALEL
CN1-6	32	OT	" -OT	OVER TRAVEL
CN6-21	33	P24		DC24V +COMMON (MC)
CND 1-41	34	342	CA17-L	TOOL MEASURING ARM EXTEND
1-8	35	343	-M	TOOL MEASURING ARM RETRACT
2-13	36	238	-J	TOOL LENGTH MEASURE DEC.
2-14	37	239	-K	TOOL MEASURE SKIP
	38			
CN6-24	39	RSP2		RELAY SPARE 2
CN5-4	40	EMB	CA17-S	EMERGENCY STOP
5-5	41	EMC	" -T	EMERGENCY STOP
CN6-50	42	RSP3		
CN5-5	43	G24	CM3-14	DC 24V -COMMON (MC)
CND 1-38	44	.862	CA17-W	TOOL SET (ISP13)
CN3-44	45	RSP4		
CND 4-4	46	346	CA17-V	TOOL EJECT COVER INTERLOCK - (ISP24)
	47	SP1		SPARE 1
	48			
	49	+24V	" -+24V	DC24V +COMMON (NC)
	50	+24V	" -+24V	DC 24V +COMMON (NC)

CN3

INSIDE CONNEC.	PIN NO.	LINE NO.	OUTSIDE CONNEC.	SIGNAL NAME
CND 1-3	1	*ESP	CN3-1	EMERGENCY STOP
4-48	2	141	-2	HEAD LUBE PRESS
1-22	3	142	-3	MACHINE DOOR INTERLOCK
1-1	4	143	-4	SPINDLE ZERO SPEED
	5			
	6			
	7			
CN4-6	8	OS	-8	SPINDLE CONTROLLER COMMON
-8	9	SET2	-9	SPINDLE CONTROLLER COMMON
-7	10	SET1	-10	SPINDLE SET
-9	11	SRN	-11	SPINDLE FORWARD
-10	12	SRI	-12	SPINDLE REVERSE
	13			
-12	14	ORC1	-14	ORIENT COMMAND
-13	15	TL1	-15	TORGUE LIMIT LOW
	16			
	17			
	18			
	19			
	20			
	21			
	22			
	23			
	24			
	25			
	26			
	27			
	28			
	29			
	30			
	31			
	32			
CN4-15	33	ORC2	-33	SPINDLE CONTROLLER COMMON
	34			
CND 4-49	35	WLAL	-35	WAYLUBE ALARM
CN1-7	36	390	-36	WAY LUBE WARNING TIMER
CND 1-47	37	+LY	-37	+Y OVER TRAVEL
1-50	38	-LZ	-38	-Z OVER TRAVEL
1-7	39	147	-39	TOOL DETECTOR
	40	SP2	-40	SPARE 2
	41	SP3	-41	SPARE 3
	42	SP4	-42	SPARE 4
	43	SP5	-43	SPARE 5
CN2-45	44	RSP4	-44	DELAY SPARE
	45			
	46			
	47			
	48			
	49	+24V	-49	DC 24V +COMMON (NC)
	50	+24V	-50	DC 24V +COMMON (NC)

TERMINAL UNIT SIDE : MR-50RMW
CABLE SIDE : MR-50LF

DRAWING NO. 4243081321
SHEET ____ OF ____

INDEX NUMBER
SHEET LINE

APPROVED
DESIGNED
DRAWN MAR.24.'86

Mazak
YAMAZAKI MAZAK CORPORATION

TITLE VQC-15/40 DETAILS OF TERMINAL UNIT CONNECTION (1)

CONTROL
DRAWING NO. 4243081321
SHEET ____ OF ____
SIZE 3

SHEET LINE
INDEX NUMBER

CN6

INSIDE CONNEC.	PIN NO.	LINE NO.	OUTSIDE CONNEC.	SIGNAL NAME
CND 2-24	1	CYFIN	CN30/A-1	CYCLE FINISH LIGHT
2-28	2	M44T	-2	M CODE M43
2-44	3	M43T	-3	M CODE M44
2-30	4	M45T	-4	M CODE M45
	5			
	6			
CND 2-42	7	SA	-7	SERVO READY
3-34	8	WL	-8	WORK LIGHT
3-43	9	SSET	-9	SPINDLE SET
2-23	10	OSP19	-10	OUTPUT SPARE 19
3-32	11	OTR	-11	OVER TRAVEL RELEASE
CN2-14	12	+LYZ	-12	+Y 2nd OVER TRAVEL
CN6-13	13	-LZZ	-13	-Z 2nd OVER TRAVEL
	14			
	15			
	16			
	17	+24V	-17	DC24V +COMMON (NC)
CND 3-46	18	TAPC	-18	TAPC.M (OSP11)
2-25	19	MMAL	-19	MACHINE MAL FUNCTION
3-17	20	PW1	-20	POWER ON
CN2-33	21	P24	-21	DC24V +COMMON (MC)
	22			
CN1-3	23	341	-23	MACHINE DOOR INTERLOCK
CN2-39	24	RSP2	-24	RELAY SPARE 2
	25			
CN4-1	26	ZS1	-26	SPINDLE ZERO SPEED
CND 3-14	27	SFR	-27	SPINDLE FORWARD
3-13	28	SRV	-28	SPINDLE REVERSE
3-30	29	SMR	-29	SPINDLE RUN
3-45	30	ORCM1	-30	ORIENT COMMAND
CN7-32	31	MAR2	-31	POWER ON
	32			
CND 2-43	33	TCME	-33	TOOL CHANGE MEMORY
2-48	34	NSPT.	-34	NO SPARE TOOL
	35			
	36			
CN2-13	37	381	-37	MAGAZINE TOOL DETECTOR
	38			
CN2-23	39	355	-39	HEAD LUBE PRESSURE
	40			
	41	OG	-41	DC24V -COMMON (NC)
	42	OG	-42	DC24V -COMMON (NC)
	43	OG	-43	DC24V -COMMON (NC)
	44	OG	-44	DC24V -COMMON (NC)
	45			
	46	OG	-46	DC24V -COMMON (NC)
	47	OG	-47	DC24V -COMMON (NC)
	48			
	49			
CN2-42	50	RSP3	-50	RELAY SPARE 3

CN7

INSIDE CONNEC.	PIN NO.	LINE NO.	OUTSIDE CONNEC.	SIGNAL NAME
CND 3-36	1	MF	TB6 -MF	M FUNCTION
5-8	2	M11	-M11	M CODE 11
5-9	3	M12	-M12	M CODE 12
5-10	4	M14	-M14	M CODE 14
5-11	5	M18	-M18	M CODE 18
5-12	6	M21	-M21	M CODE 21
5-13	7	M22	-M22	M CODE 22
5-14	8	M24	-M24	M CODE 24
5-15	9	M28	-M28	M CODE 28
5-16	10	M31	-M31	M CODE 31
5-17	11	M32	-M32	M CODE 31
5-18	12	M34	-M34	M CODE 34
5-19	13	M38	-M38	M CODE 38
3-21	14	ZPX	-ZPX	ZERO POSITION X AXIS
3-22	15	ZPY	-ZPY	ZERO POSITION Y AXIS
3-23	16	ZPZ	-ZPZ	ZERO POSITION Z AXIS
	17	OG	-OG	DC 24V -COMMON (NC)
	18	OG	-OG	DC 24V -COMMON (NC)
3-24	19	ZP4	-ZP4	ZERO POSITION 4 AXIS
3-20	20	MFA	-MFA	M FUNCTION A
3-38	21	FHDL	-FHDL	FEED HOLD LED
3-39	22	ZP2Z	-ZP2Z	2nd ZERO POSITION Z AXIS
2-15	23	AUTM	-AUTM	AUTO MODE
2-47	24	PUCCD	-PUCCD	PALLET UNCLAMP COMMAND
2-17	25	FHDPB	-FHDPB	FEED HOLD PB.
2-31	26	CSTL	-CSTL	CYCLE START LED
2-49	27	CSTPB	-CSTPB	CYCLE START PB.
2-46	28	PCLCD	-PCLCD	PALLET CLAMP COMMAND
2-9	29	ISP19	-ISP19	INPUT SPARE 19
2-26	30	MRDY	-MRDY	MACHINE READY
2-41	31	RST	-RST	RESET OUT
CN6-31	32	MAR2		
CND 3-40	33	OSP18	-OSP18	SPARE 18
	34			
	35			
CND 1-13	36	EXFIN	-EXFIN	EXTERNAL FINISH SIGNAL
1-25	37	EXRST	-EXRST	EXTERNAL RESET
2-1	38	INTX	-INTX	X AXIS INTERLOCK
2-19	39	INTY	-INTY	Y AXIS INTERLOCK
2-2	40	INTZ	-INTZ	Z AXIS INTERLOCK
2-3	41	INT4	-INT4	4 AXIS INTERLOCK
2-36	42	EXAL	-EXAL	EXTERNAL ALARM
2-35	43	ONLN	-ONLN	ON LINE
2-22	44	ENCOL	-ENCOL	ENABLE COOLANT
2-4	45	ECST	-ECST	EXTERNAL CYCLE START
2-5	46	EFHD	-EFHD	EXTERNAL FEED HOLD
2-6	47	ESBK	-ESBK	EXTERNAL SINGLE BLOCK
2-34	48	EMOP1	-EMOP1	EXTERNAL MISS OPERATION 1
	49	+24V	-+24V	DC 24V +COM (NC)
	50	+24V	-+24V	"

TERMINAL UNIT SIDE : MR-50RMW

DRAWING NO. 4243081322
SHEET ____ OF ____

INDEX NUMBER
SHEET LINE

APPROVED
DESIGNED
DRAWN MAR. 20 '86

Mazak
YAMAZAKI MAZAK CORPORATION

TITLE VQC-15/40 DETAILS OF TERMINAL UNIT CONNECTION (2)

CONTROL
DRAWING NO. 4243081322
SHEET 3 OF ____
SIZE

SHEET LINE
INDEX NUMBER

CN8

INSIDE CONNEC.	PIN NO.	LINE NO.	OUTSIDE CONNEC.	SIGNAL NAME
CND 1-5	1	PS1LS	TB7 -287	PALLET SELECT NO.1 LS
1-14	2	PS2LS	" -288	" NO.2 LS
1-34	3	PDCRS	" -296	PALLET DOOR CLOSE RS
1-35	4	PDORS	" -297	" OPEN RS
1-36	5	PLPRS	" -283	PALLET LOAD PRS
1-42	6	PULPRS	" -284	PALLET UNLOAD PRS
1-43	7	PON1PRS	" -292	PALLET ON STOCKER NO.1 PRS
1-42	8	PON2PRS	" -293	" NO.2 PRS
1-43	9	PCLPRS	" -298	PALLET CLAMP PRS
1-44	10	PUCPRS	" -299	PALLET UNCLAMP PRS
3-42	11	PCL	" -722A	PALLET CLAMP
3-47	12	PUC	" -722B	PALLET UNCLAMP
3-7	13	PAB	" -724	PALLET AIR BLAST
3-27	14	PDO	" -725A	PALLET DOOR OPEN
3-19	15	PDC	" -725B	" CLOSE
3-15	16	PLD	" -782A	PALLET LOAD
3-29	17	PUD	" -782B	PALLET UNLOAD
3-5	18	P1S	" -787A	PALLET SELECT NO.1
3-33	19	P2S	" -787B	" NO.2
3-35	20	PCY1	" -PCY1	PALLET CYCLE NO.1 LED
	21	+24V	" -+24V	DC 24V + COM (NC)
	22	+24V	" -+24V	"
CND 1-9	23	PCY1PB	" -851	PALLET CYCLE NO.1 PB
1-26	24	PCY2PB	" -852	" NO.2 PB
2-11	25	PS2SS	" -853	PALLET SELECT NO.2 PB
2-8	26	PS1SS	" -854	" NO.1 PB
2-39	27	PCLSS	" -855	PALLET CLAMP SS
2-40	28	PUCSS	" -856	PALLET UNCLAMP SS
4-34	29	PLSS	" -857	PALLET LOAD SS
4-35	30	PULSS	" -858	PALLET UNLOAD SS
4-21	31	PDCSS	" -859	PALLET DOOR CLOSE SS
2-12	32	PDOSS	" -860	" OPEN SS
2-7	33	ENPCSS	" -861	ENABLE PALLET CHANGE
	34			
	35			
CND 3-41	36	PCY2	-PCY2	PALLET CYCLE NO2. LED
3-26	37	PLP	-1571	PALLET LOCK PIN
3-37	38	PSLP	-1572	PALLET STOCKER LOCK PIN
	39			
	40			
	41			
	42			
	43			
	44			
CND 1-28	45	PLPR	-2063	PALLET LOCK PIN RET.
4-16	46	PLPE	-2064	PALLET LOCK PIN EXT.
4-17	47	PSLPE	-2065	INPUT SPARE
4-20	48	PSLPR	-2066	INPUT SPARE
	49	0G	-0G	DC24V -COM (NC)
	50	0G	-0G	"

INSIDE CONNEC.	PIN NO.	LINE NO.	OUTSIDE CONNEC.	SIGNAL NAME
	1			
	2			
	3			
	4			
	5			
	6			
	7			
	8			
	9			
	10			
	11			
	12			
	13			
	14			
	15			
	16			
	17			
	18			
	19			
	20			
	21			
	22			
	23			
	24			
	25			
	26			
	27			
	28			
	29			
	30			
	31			
	32			
	33			
	34			
	35			
	36			
	37			
	38			
	39			
	40			
	41			
	42			
	43			
	44			
	45			
	46			
	47			
	48			
	49			
	50			

TERMINAL UNIT SIDE ; MR-50RMW

INDEX NUMBER

SHEET	LINE

APPROVED: h. hv.
DESIGNED: K. Hirano
DRAWN: V. Orlando MAR. 22. '86

Mazak
YAMAZAKI MAZAK CORPORATION

TITLE: VQC-15/40 DETAILS OF TERMINAL UNIT CONNECTION (3)

CONTROL DRAWING NO. 4243081323 SHEET ___ OF ___

SIZE 3

DRAWING NO. 4243081323 SHEET ___ OF ___

CN 1

INSIDE CONNEC.	PIN NO.	LINE NO.	OUTSIDE CONNEC.	SIGNAL NAME
CN 3-36	1	390	CA16 -C	WAY LUBE WARNING TIMER
CND 1-37	2	151	-A	MACHINE DOOR INTERLOCK
CN6 -23	3	341	-B	〃
CND 4-3	4	CH24	-D	HEAD LUBE ALARM
CN2-29	5	*-LY	-E	-Y AXIS OVER TRAVEL
CN2-32 5-13	6	-OT	-F	OVER TRAVEL
	7	SP62	-G	
	8	SP63	-H	
	9	SP64	-J	
	10	SP65	-K	
	11			
	12			
	13			
	14			
	15			
	16			
CN5 -8	17	G24	CA16 -P	
CN6 -21	18	G24	-R	
	19	+24V	-S	
	20	+24V	-T	

CN 4

INSIDE CONNEC.	PIN NO.	LINE NO.	OUTSIDE CONNEC.	SIGNAL NAME
CN 6-26	1	ZS1	CON 1-3	SPINDLE ZERO SPEED
	2	ZS2	〃 1-4	+COM (+24V)
CND 1-2	3	FA	〃 1-11	SPINDLE CONTROLLER NORMAL
	4	FC	〃 1-12	+COM (+24V)
	5			
CN 3-8	6	OS	〃 1-14	OS
-10	7	SET1	〃 1-17	SPINDLE SET
-9	8	SET2	〃 1-8	COM
-11	9	SRN	〃 1-45	SPINDLE FORWARD
-12	10	SRI	〃 1-46	SPINDLE REVERSE
	11	SP6		SPARE 6
-14	12	ORC1	〃 1-25	ORIENT COMMAND
-15	13	TL1	〃 1-5	TORQUE LIMIT LOW
	14	SP7		SPARE 7
-33	15	ORC2	〃 1-26	ORC 2
CND 1-27	16	ORA1	〃 1-22	SPINDLE ORIENT ARRIVAL
	17	ORA2	〃 1-23	+COM (+24V)
CND 5-4	18	SE1	〃 1-31	
5-5	19	SE2	〃 1-32	
5-20	20	SES	〃 1-30	

CN 5

INSIDE CONNEC.	PIN NO.	LINE NO.	OUTSIDE CONNEC.	SIGNAL NAME
CND 4-46	1	144	TB4 -144	TERMAL TRIP PROTECTOR
CN7-31	2	RST	TB1 -RST	RESET OUT
CND 4-50	3	146	TB4 -146	MAIN TRANSF. OVER HEAT
CN 2-40	4	EMB	〃 -EMB	EMERGENCY STOP
〃 2-41	5	EMC	TB1 -57	〃
	6	OG	〃 -OG	DC 24V -COM (NC)
	7	OG	〃 -OG	〃
CN 2-43	8	G24	〃 -G24	DC 24V -COM (ELECTRIC CABINET)
CN7-46	9	EFHD	〃 -EFHD	EXT.FEED HOLD
CND 2-37	10	RCTLS	〃 -RCTLS	RECESSING TOOL LS
CND 1-46	11	*-LX	〃 *-LX	-X OVER TRAVEL
CN5-13	12	OT	-OT	OVER TRAVEL
CN1-6	13	OTX	-OTX	OVER TRAVEL
CND 4-44	14	*DEC4	TB1 -*DEC4	4AXIS ZERO RETURN DEC.
4-18	15	152	〃 -152	INDEX TABLE TYPE 4AXIS UNCLAMPSS
CND 2-10	16	INHRLS	〃 -INHRLS	INHIBIT READ LS
CND 1-23	17	TUCSS	TB4 -149	TOOL UNCLAMP KEY SWITCH
4-3	18	CH24	TB1 -CH24	HEAD LUBE PRESSRE ALARM
	19	+24V	〃 -+24V	DC 24V +COM (NC)
	20	+24V	〃 -+24V	〃

CN 11

INSIDE CONNEC.	PIN NO.	LINE NO.	OUTSIDE CONNEC.	SIGNAL NAME
CND 3-25	1	708B	SSR BOARD CN11-1	MAGAZINE CW (REV)
3-31	2	708A	〃 -2	MAGAZINE CCW (FOR)
3-49	3	710	〃 -3	TOOL UNCLAMP
3-16	4	754	〃 -4	LARGE CAPACITY COOLANT START
3-28	5	7574	〃 -5	MAGAZINE RUN
3-1	6	715	〃 -6	SPINDLE AIR BLAST
3-12	7	716	〃 -7	WORK AIR BLAST
3-11	8	717	〃 -8	MIST COOLANT
2-45	9	762	〃 -9	TOOL MEASURING ARM EXTEND
2-27	10	761	〃 -10	AIR JET
3-44	11	735	〃 -11	LARGE CAPACITY COOLANT
3-10	12	736	〃 -12	OIL HOLE
3-9	13	SSP3	〃 -13	SSR SPARE 3
3-50	14	727	〃 -14	MAGAZINE COVER CLOSE
3-8	15	836	〃 -15	FLOOD COOLANT MOTOR START
3-48	16	835	〃 -16	·HYDR. PUMP ·HEAD LUBE PUMP
	17			
	18			
	19	OG	〃 -19	DC 24V -COM (NC)
	20	OG	〃 -20	DC 24V -COM (NC)

TERMINAL UNIT SIDE; MR-20MW

DRAWING NO. 4243081324
SHEET ____ OF ____

INDEX NUMBER
SHEET LINE
APPROVED
DESIGNED
DRAWN MAR.22.'86
Mazak YAMAZAKI MAZAK CORPORATION
TITLE VQC-15/40 DETAILS OF TERMINAL UNIT CONNECTION (1)
CONTROL
DRAWING NO. 4243081324
SHEET ____ OF ____
SIZE 3

CN200 (MMS RECEIVER)

INSIDE CONNEC.	PIN NO.	LINE NO.	OUTSIDE CONNEC.	SIGNAL NAME
CND 4-28	1	MMS RDY	CN200 -1	MMS READY
4-29	2	SEN RDY	" -2	MMS SENSOR READY
CN2-37	3	MMS SKIP	" -3	" SKIP
CND 4-30	4	MMS ST	" -4	" START
4-27	5	MMS PON	" -5	" POWER ON
	6			
	7	OG	" -7	DC 24V -COM (NC)
	8			
	9			
	10			
	11			
	12			
	13			
CND 2-29	14	MMS STCMD	" -14	MMS START COMAND
	15			
	16			
	17			
	18			
	19			
	20	+24V	" -20	DC 24V +COM (NC)

INSIDE CONNEC.	PIN NO.	LINE NO.	OUTSIDE CONNEC.	SIGNAL NAME
	1			
	2			
	3			
	4			
	5			
	6			
	7			
	8			
	9			
	10			
	11			
	12			
	13			
	14			
	15			
	16			
	17			
	18			
	19			
	20			

INSIDE CONNEC.	PIN NO.	LINE NO.	OUTSIDE CONNEC.	SIGNAL NAME
	1			
	2			
	3			
	4			
	5			
	6			
	7			
	8			
	9			
	10			
	11			
	12			
	13			
	14			
	15			
	16			
	17			
	18			
	19			
	20			

INSIDE CONNEC.	PIN NO.	LINE NO.	OUTSIDE CONNEC.	SIGNAL NAME
	1			
	2			
	3			
	4			
	5			
	6			
	7			
	8			
	9			
	10			
	11			
	12			
	13			
	14			
	15			
	16			
	17			
	18			
	19			
	20			

TERMINAL UNIT SIDE : MR-20RMW

INDEX NUMBER
SHEET LINE

APPROVED M. Iw.
DESIGNED K. Hirata
DRAWN T. Ichida MAR. 22. 86

Mazak
YAMAZAKI MAZAK CORPORATION

TITLE VQC-15/40 DETAILS OF TERMINAL CONNECTION (1)

CONTROL DRAWING NO 4243081325
SHEET OF
SIZE 3

DRAWING NO. 4243081325
SHEET OF

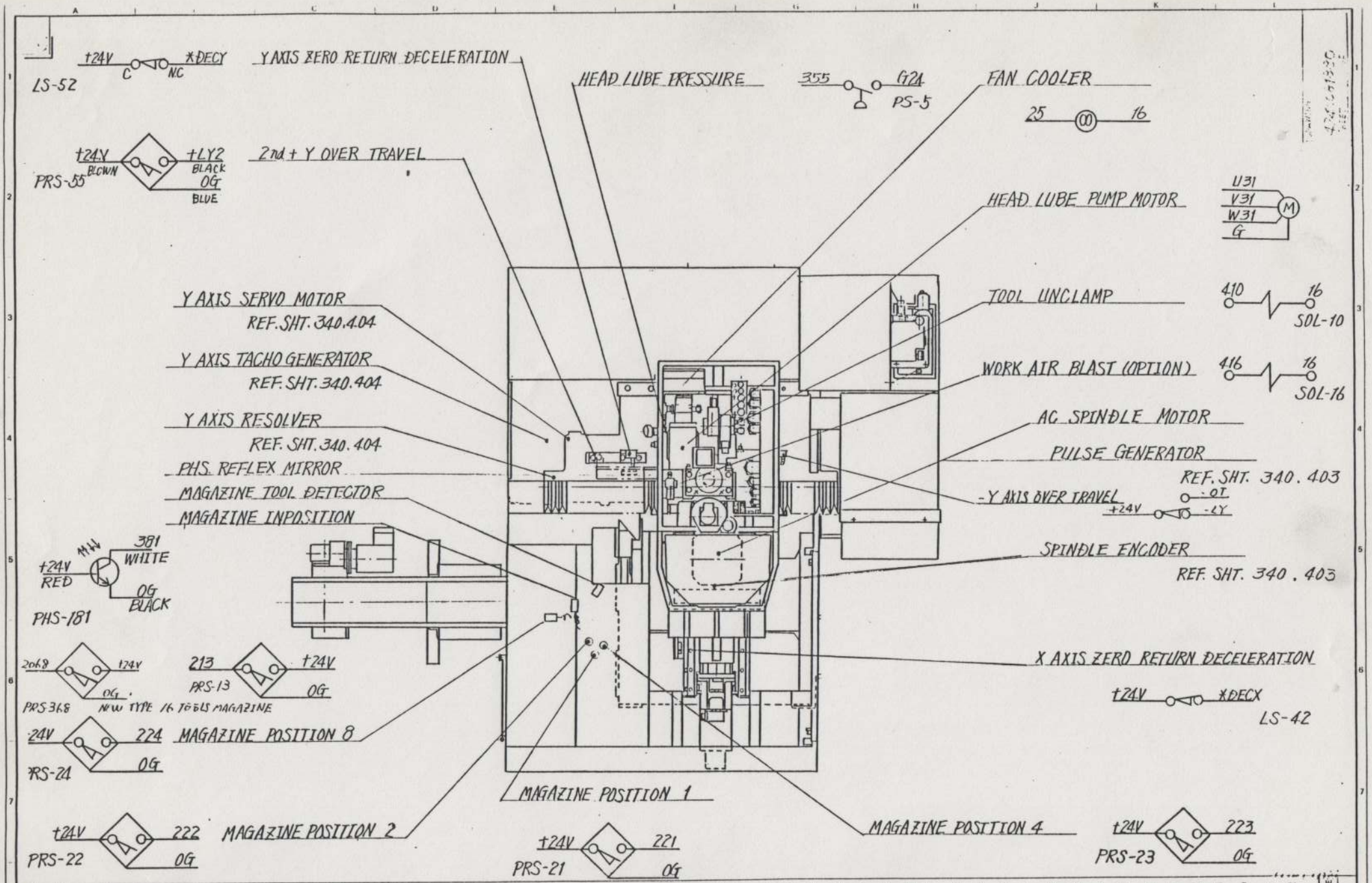

APPROVED	DESIGNED	DRAWN	TITLE VQC15/40 PLANE VIEW COMPONENTS LAYOUT (1)	CONTROL MAZATROL DRAWING NO. 4243081330 SHEET 1 OF 2	SIZE 3

Mazak
YAMAZAKI MAZAK CORPORATION

1	+24V (BROWN)	221 (BLACK) / 0G (BLUE)	PRS-21 MAGAZINE POSITION 1
2	+24V	222 / 0G	PRS-22 MAGAZINE POSITION 2
3	+24V	223 / 0G	PRS-23 MAGAZINE POSITION 4
4	+24V	224 / 0G	PRS-24 MAGAZINE POSITION 8
5	+24V	225 / 0G	PRS-25 MAGAZINE POSITION 16
6	+24V	213 / 0G	PRS-13 MAGAZINE INPOSITION CCW
7	+24V	2068 / 0G	PRS-368 MAGAZINE INPOSITION CW
* 8	+24V	2069 / 0G	PRS-369 MAGAZINE MOTOR INPOSITION
* OLD TYPE INDEX MOTOR	+24V	2069	LS-369 NEW TYPE INDEX MOTOR
9	16	408B	SOL-8B MAGAZINE CW
10	16	408A	SOL-8A MAGAZINE CCW
11	16	1574	SOL-174 MAGAZINE RUN
12	16	424	SOL-24 PALLET AIR BLAST
13	16	422A	SOL-22A PALLET CLAMP
14	16	422B	SOL-22B PALLET UNCLAMP
15	16	425A	SOL-25A PALLET DOOR OPEN
16	16	425B	SOL-25B PALLET DOOR CLOSE
17	16	482A	SOL-82A PALLET LOAD
18	16	482B	SOL-82B PALLET UNLOAD
19	16	487A	SOL-87A PALLET SELECT NO.1
20	+24V	283 / 0G	PRS-83 PALLET LOAD
21	+24V	284 / 0G	PRS-84 PALLET UNLOAD
22	+24V	298 / 0G	PRS-98 PALLET CLAMP
23	+24V	299 / 0G	PRS-99 PALLET UNCLAMP
24	+24V	296	RS-96 PALLET DOOR CLOSE
25	+24V	297	RS-97 PALLET DOOR OPEN
26	+24V	2063	RS-363 PALLET LOCK
27	+24V	2064	RS-364 PALLET UNLOCK
28	+24V	287	LS-87 (STATION NO.1) PALLET SELECT NO.1
29	+24V	288	LS-88 (STATION NO.2) PALLET SELECT NO.2
30	+24V	292	LS-92 (LOADING POSITION) PALLET ON STOCKER NO.1
31	+24V	293	LS-93 (UNLOADING POSITION) PALLET ON STOCKER NO.2
32	16	487B	SOL-87B PALLET SELECT NO.2
33	16	1571	SOL-171 PALLET UNLOCK
34	16	1572	SOL-172 PALLET STATION UNLOCK

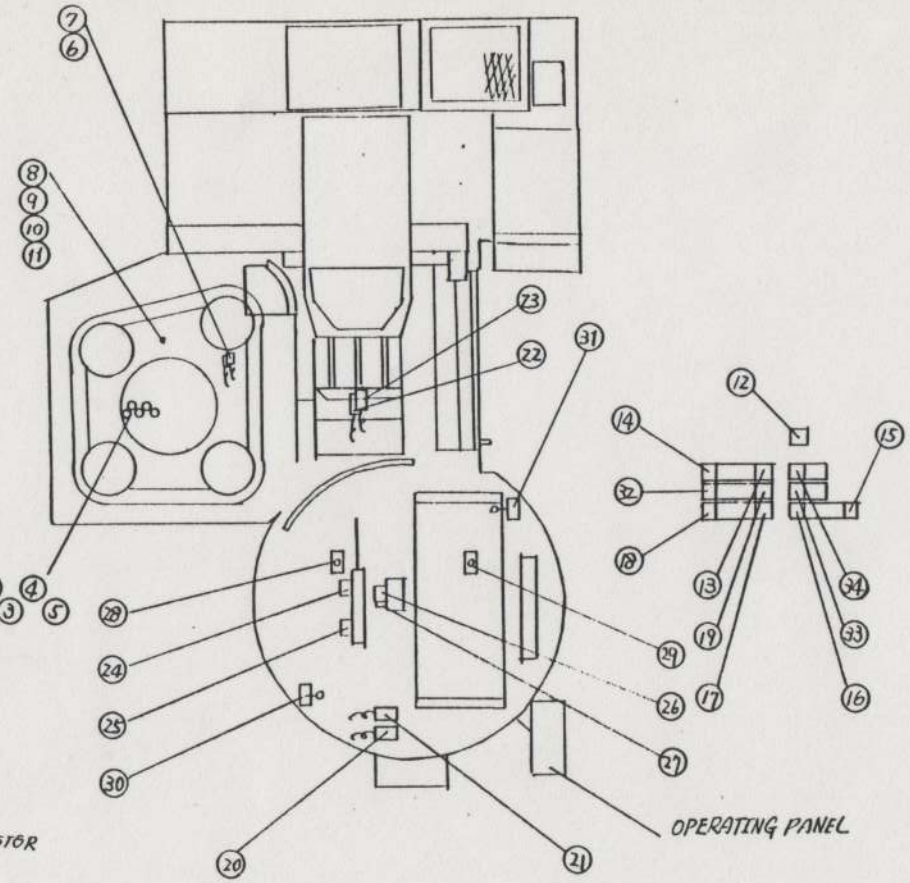

DRAWING NO. 424/6 81330 SHEET. OF.

DRN. BY K. Nitta	TITLE VQC-15/40 PLANE VIEW (OPTION) 2PC & 30 TOOLS MAGAZINE	CONTROL M2V	SIZE 3
DATE Mar. 20. '86	Mazak YAMAZAKI MAZAK CORPORATION	DRAWING NO. 424/6 81330	
CHK'D BY		SHEET 2 OF 2	
DATE			

INDEX NUMBER / LINE / SHEET

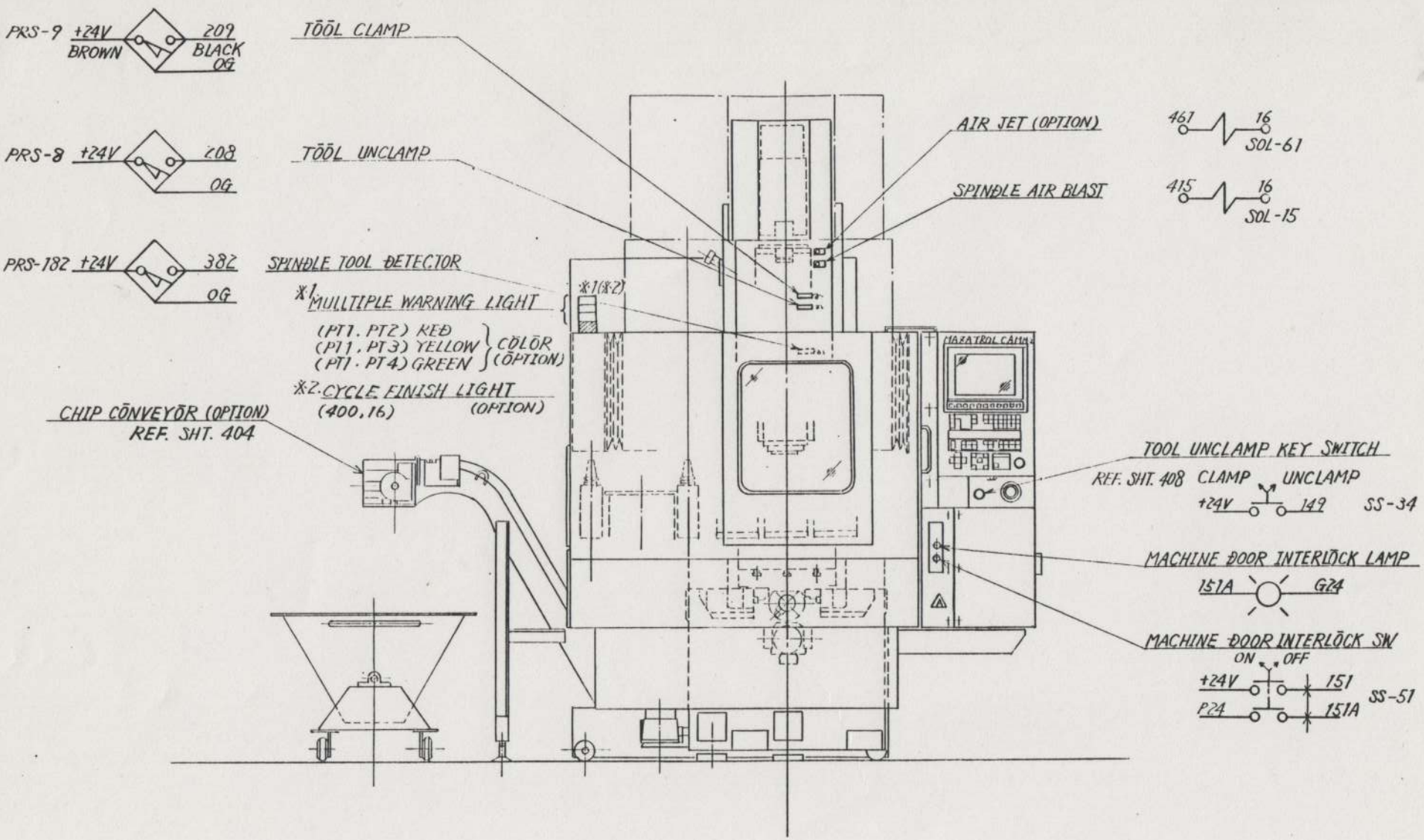

DRAWING NO. 424308/331A SHEET OF

INDEX NUMBER	LINE	SHEET	APPROVED	DESIGNED	DRAWN	TITLE	CONTROL	DRAWING NO.	SIZE
	01 02 03 04 05 06 07 08 09 10 11 12 13 14 15 16 17 18 19 20 21 22 23 24 25 26 27 28 29 30 31 32 33 34 35 36 37 38 39 40 41 42 43 44 45 46 47 48 49 50 51 52	⚠ DELETE MACHINE DOOR INTERLOCK LS. Oct. 31 '86 MIWA		K. Kiara	4/10' 86 OMEGA	VQC-15/40 FRONT SIDE VIEW COMPONENTS LAYOUT (2)	MAZATROL	424308/331A SHEET OF	3

Mazak YAMAZAKI MAZAK CORPORATION

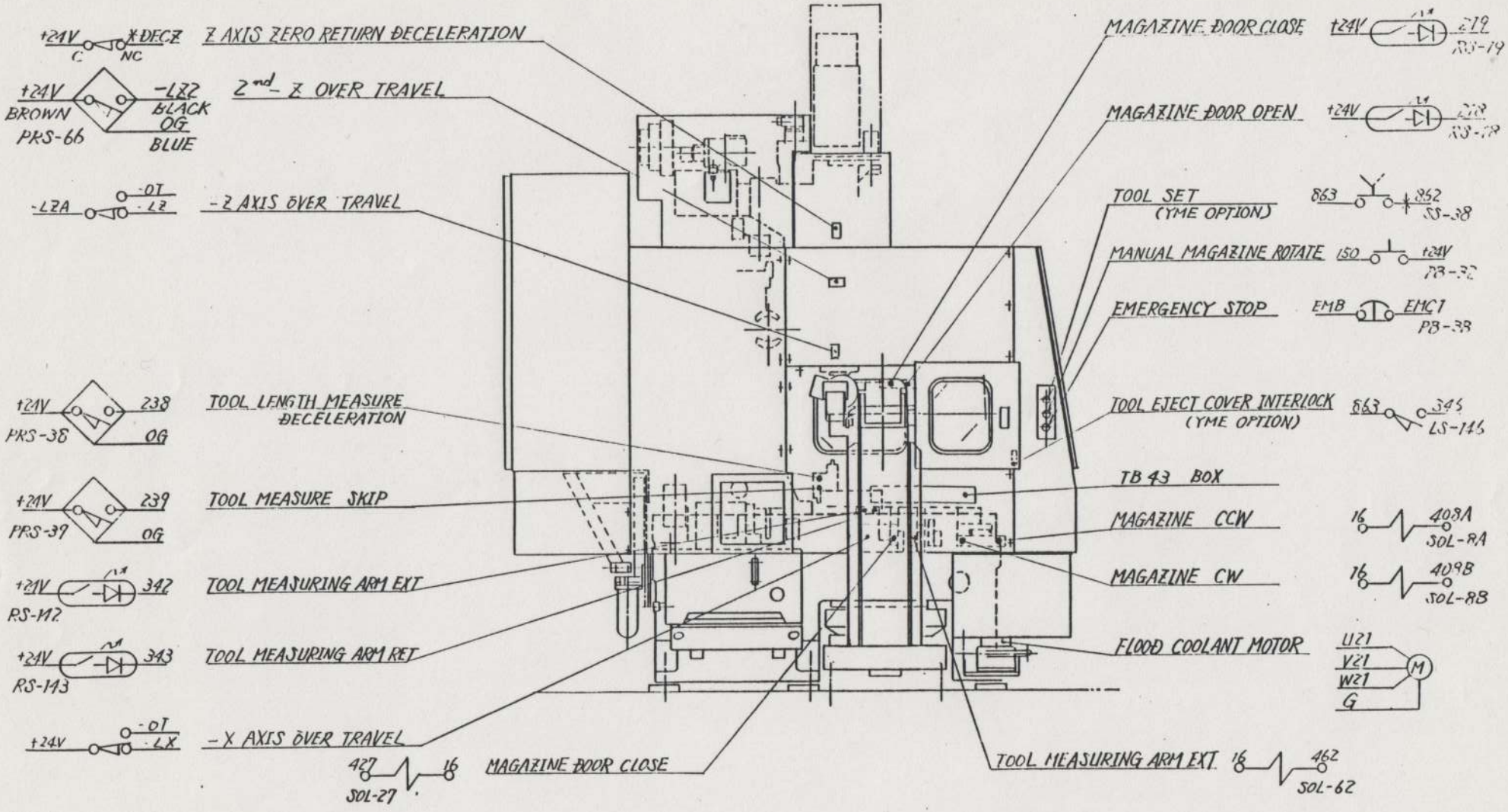

DRAWING NO. 4243081332 SHEET ___ OF ___

INDEX NUMBER	LINE	APPROVED	DESIGNED	DRAWN	TITLE	CONTROL	SIZE	SHEET	INDEX NUMBER
	01 02 03 04 05 06 07 08 09 10 11 12 13 14 15 16 17 18 19 20 21 22 23 24 25 26 27 28 29 30 31 32 33 34 35 36 37 38 39 40 41 42 43 44 45 46 47 48 49 50 51 52			NOV. 14. '86 K. Miura V. Okada	VQC-15/40 LEFT SIDE VIEW COMPONENTS LAYOUT (3)	MAZATROL DRAWING NO. 4243081332 SHEET ___ OF ___	3		

Mazak
YAMAZAKI MAZAK CORPORATION

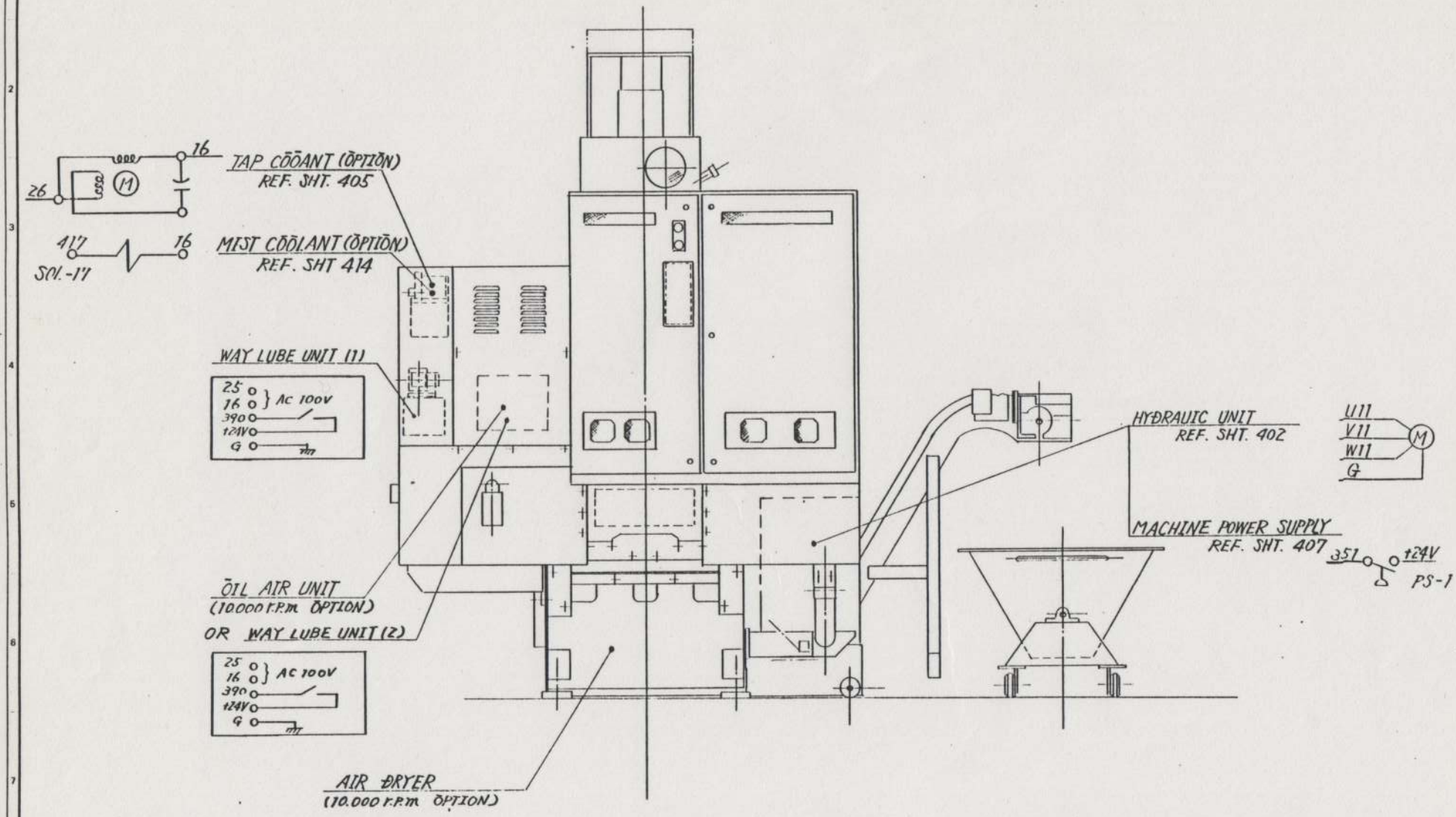

DRAWING NO 4243081333 SHEET OF

APPROVED	DESIGNED	DRAWN	Mazak YAMAZAKI MAZAK CORPORATION	TITLE VQC-15/40 REAR SIDE VIEW COMPONENTS LAYOUT (4)	CONTROL MAZATROL DRAWING NO 4243081333 SHEET OF	SIZE 3
	K. Ikura	4/10'86 OMEGA				

INDEX NUMBER LINE SHEET

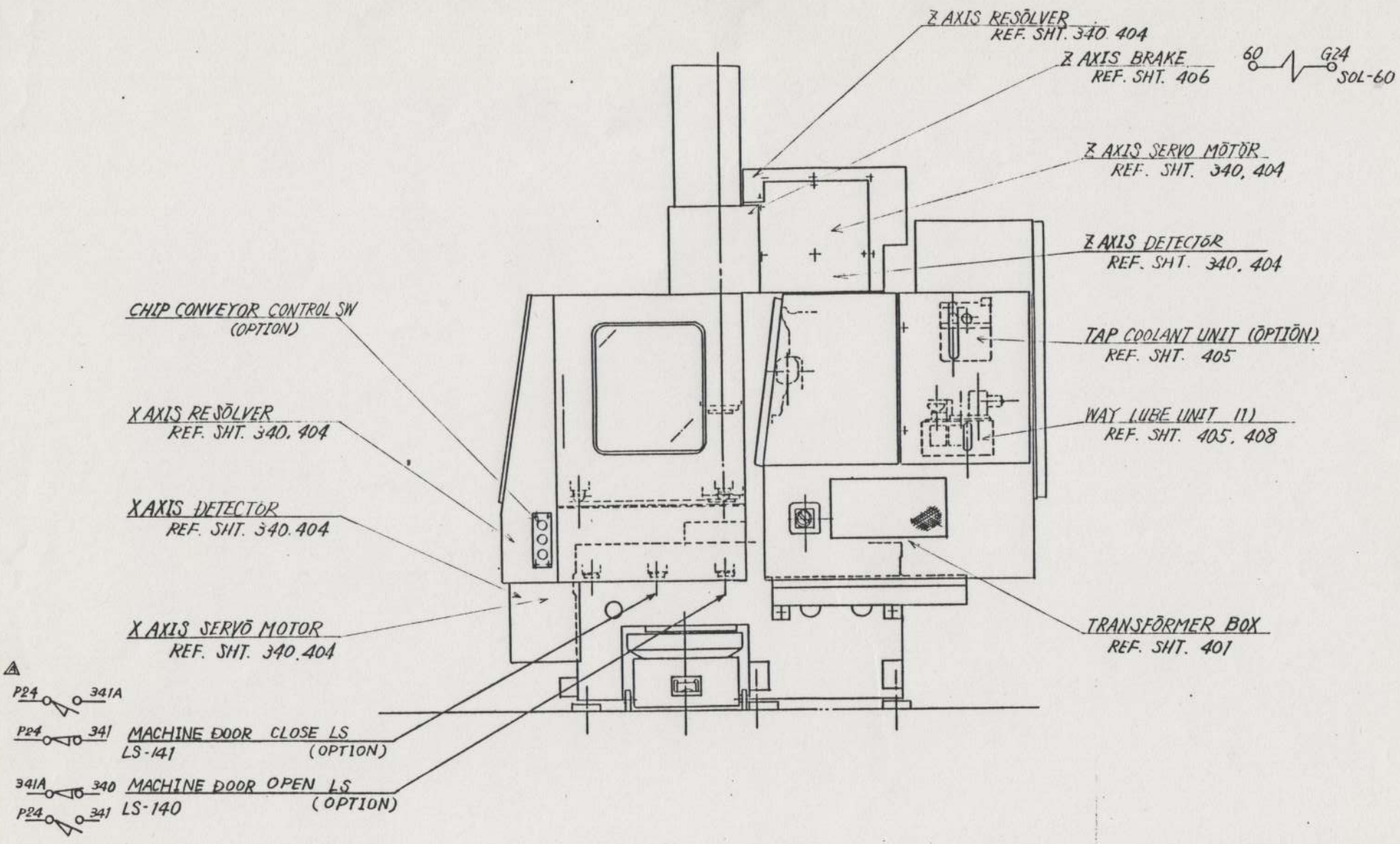

DRAWING NO. 4243081334A
SHEET ___ OF ___

⚠ ADD MACHINE DOOR LS Oct. 31, '86	APPROVED	DESIGNED K. Ikura	DRAWN 1/14 '86 T. Okuda	Mazak YAMAZAKI MAZAK CORPORATION	TITLE VQC-15/40 RIGHT SIDE VIEW COMPONETS LAYOUT (5)	CONTROL MAZATROL DRAWING NO. 4243081334A SHEET ___ OF ___ SIZE 3

TB 62

CTL-15 35P	CTL-15 35P	
283	858	
+24V	859	
0G	860	
284	861	
292	ENPC	
+24V	PCY1	
0G	PCY2	
293	0G	
298	0G	
+24V	+24V	
0G	+24V	
299	+24V	
2063		
+24V		
0G		
2064		
2065		
+24V		
0G	422A	
2066	16	
287	422B	
+24V	424	
288	16	
296	425A	
+24V	425B	
297	16	S-82A
57A	482A	
57B	482B	S-82B
851	16	
852	487A	S-87A
853	487B	S-87B
854	16	
855	1571	
856	1572	
857	16	

INDEX NUMBER

SHEET	LINE

DRN. BY K. Ikeda DATE May 3 '85
CHK'D BY DATE May 1 '85

Mazak
YAMAZAKI MAZAK CORPORATION

TITLE VQC-15/40 2PC
TERMINAL BOX TB62
TERMINAL BLOCKS LAYOUT

CONTROL MZV
DRAWING NO. 4241381336
SHEET ____ OF ____
SIZE 3

DRAWING NO. 4241381336
SHEET ____ OF ____

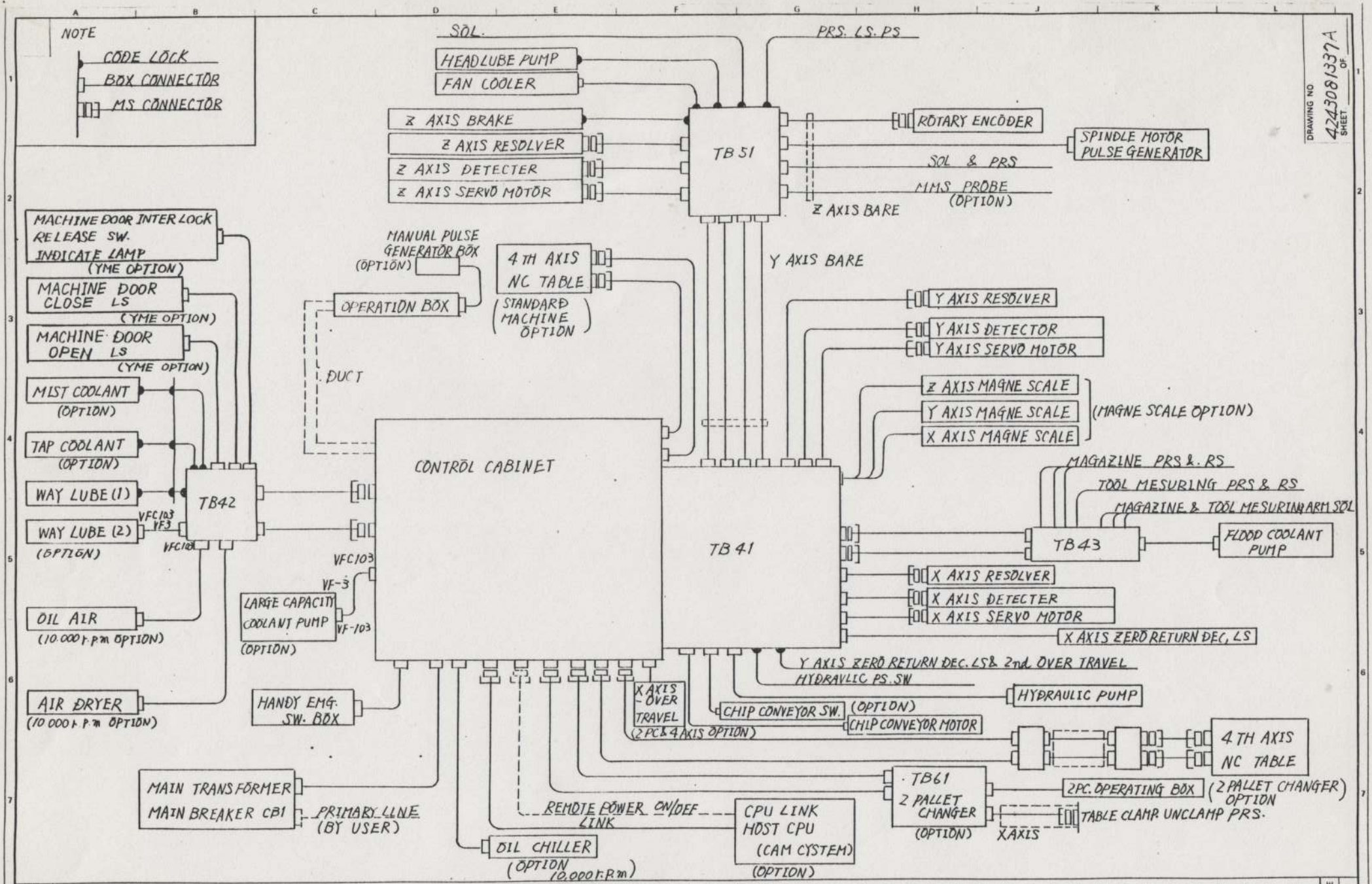

DRAWING NO 4243081337A SHEET OF

APPROVED	DESIGNED	DRAWN	TITLE	CONTROL		
	K. Iwata	4/10'86 OMEGA	VQC-15/40 CONNECTION SYSTEM DIAGRAM	MAZATROL	DRAWING NO. 4243081337A	SIZE 3

Mazak
YAMAZAKI MAZAK CORPORATION

△ DETELE DOOR INTERLOCK LS. ADD DOOR OPEN, CLOSE LS 0.t.31'86 [illegible]

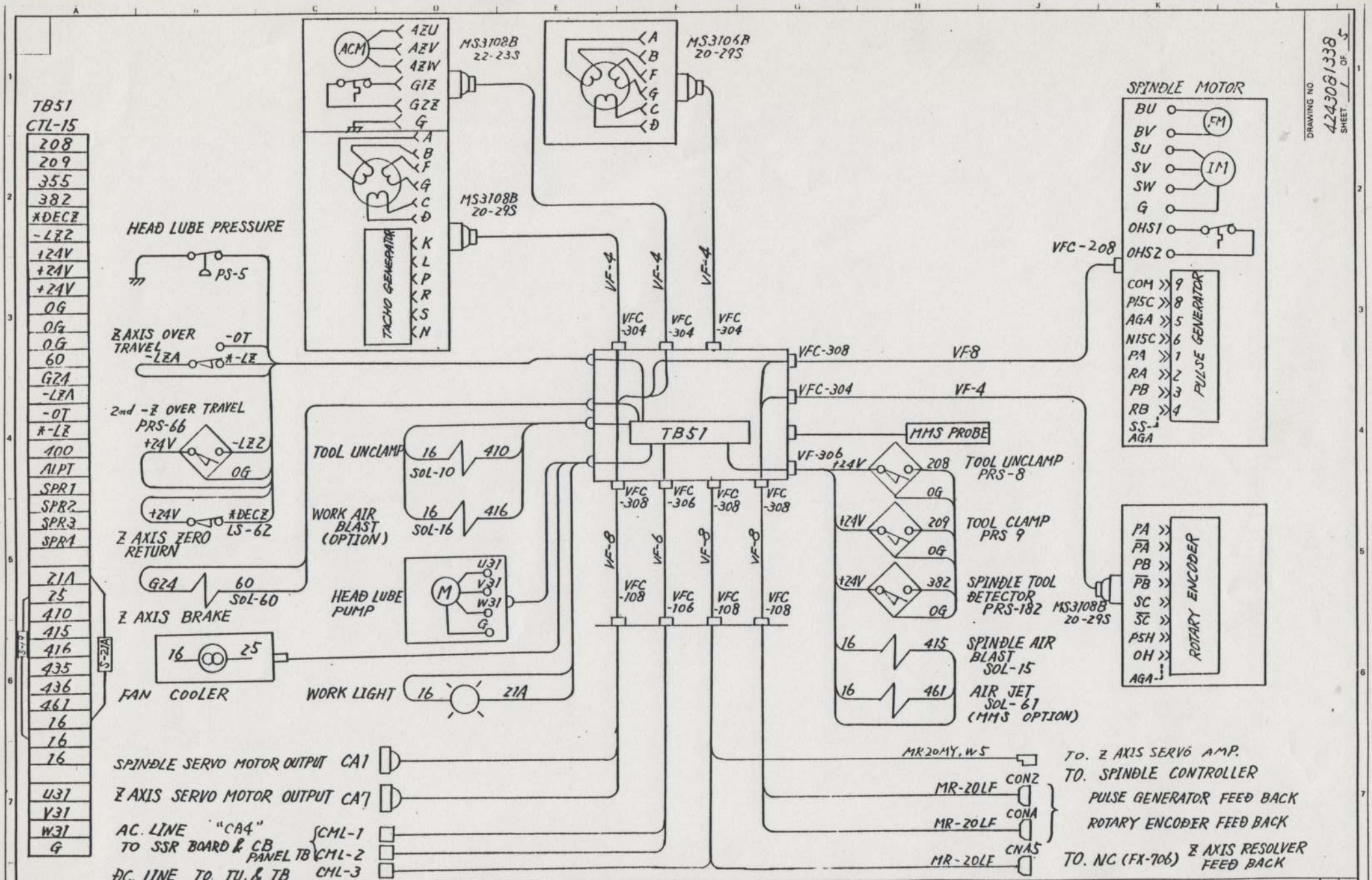

APPROVED	DESIGNED	DRAWN	TITLE	CONTROL	SIZE	
	K. Niiya	MAR.31.'86 J. Onada	VQC-15/40 TB 51 BOX	MAZATROL DRAWING NO. 4243081338 SHEET 1 OF 5	3	

Mazak
YAMAZAKI MAZAK CORPORATION

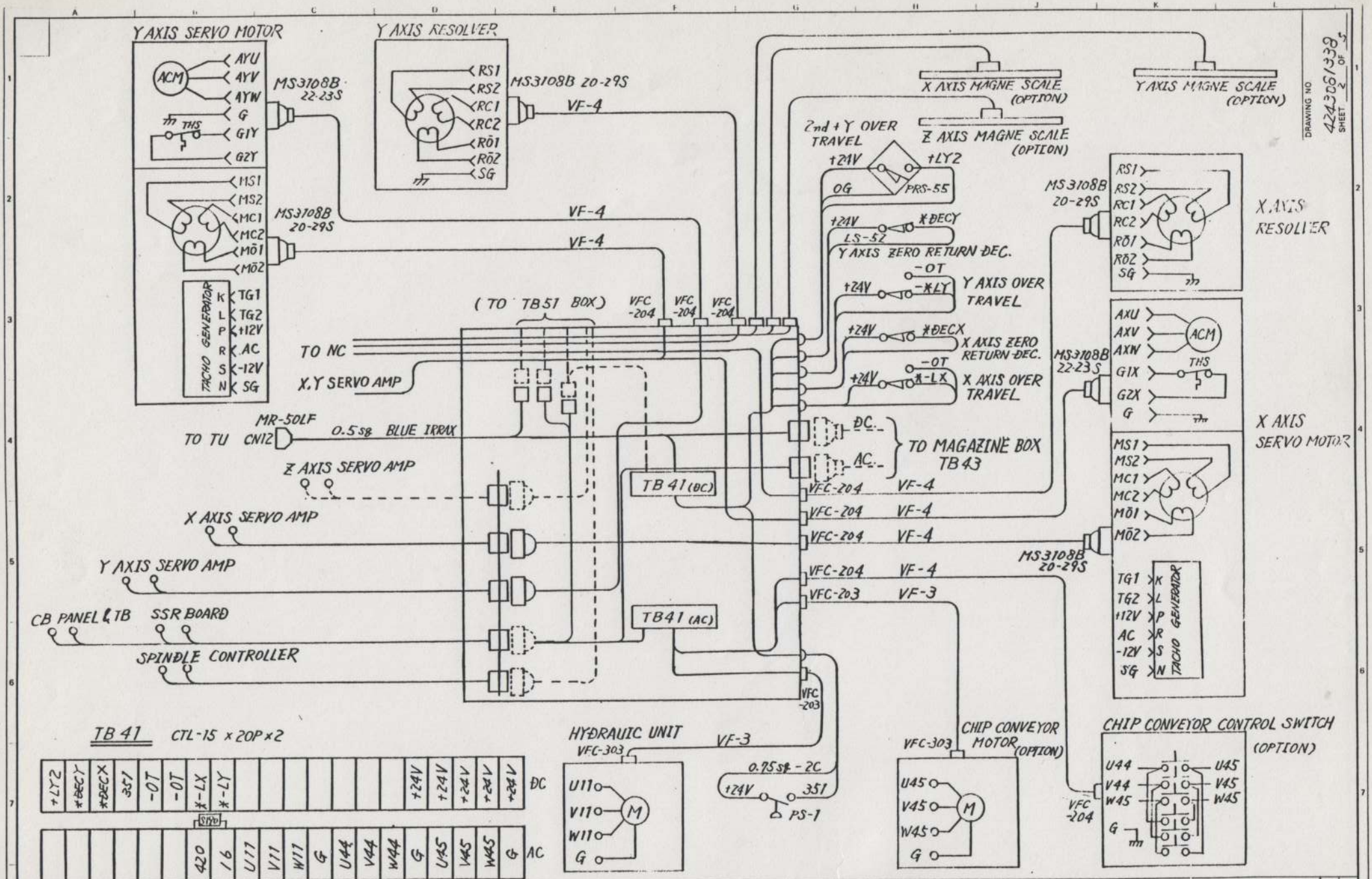

APPROVED	DESIGNED	DRAWN APR. 1. '86	Mazak YAMAZAKI MAZAK CORPORATION	TITLE VQC-15/40 TB 41 BOX LAYOUT	CONTROL MAZATROL DRAWING NO. 4243081339 SHEET 2 OF 5	SIZE 3	

DRAWING NO 4243081339 SHEET 2 OF 5

CA-1

MS3102A 24-11S
MS3106B 24-11P

PIN NO.	LINE NO.
A	
B	
C	
D	SU
E	SV
F	SW
G	G
H	BU
I	BW

WHEN USED SPINDLE "10HP", NOT USED "CA-1"

CA-5

MS3102A 22-23S
MS3106B 22-23P

PIN NO.	LINE NO.
A	AXU
B	AXV
C	AXW
D	G
E	G1X
F	G2X
G	
H	

CA-6

MS3102A 22-23S
MS3106B 22-23P

PIN NO.	LINE NO.
A	AYU
B	AYV
C	AYW
D	G
F	G1Y
F	G2Y
G	
H	

CA-7

MS3102A 22-23S
MS3106B 22-23P

PIN NO.	LINE NO.
A	AZU
B	AZV
C	AZW
D	G
E	G1Z
F	G2Z
G	
H	

CA-4

MS3102A 32-7S
MS3106B 32-7P

PIN NO.	LINE NO.
A	21A
B	25
C	410
D	415
E	416
F	435
G	436
H	461
I	16
J	16
K	U31
L	V31
M	W31
N	G
O	U11
P	V11
R	W11
S	G
T	U21
U	V21
V	W21
W	U44
X	V44
Y	W44
Z	408A
a	408B
b	420
c	427
d	462
e	1574
f	16
g	16
h	400
j	ALPT
k	G

CML-1

3191-15R
3191-15P

PIN NO.	LINE NO.
1	21A
2	25
3	410
4	415
5	416
6	435
7	436
8	461
9	16
10	16
11	U37
12	V37
13	W37
14	G
15	

CML-2

3191-06R
3191-06P

PIN NO.	LINE NO.
1	400
2	ALPT
3	SPR1
4	SPR2
5	SPR3
6	SPR4

CML-3

3191-15R
3191-15P

PIN NO.	LINE NO.
1	208
2	209
3	355
4	382
5	*DECZ
6	-LZZ
7	-LZA
8	-OT
9	*-LZ
10	+24V
11	OG
12	
13	
14	G24
15	60

TB41 CONNECTION

*1. WHEN USED SPINDLE "10HP", NOT USED CANNON CONNECTOR.

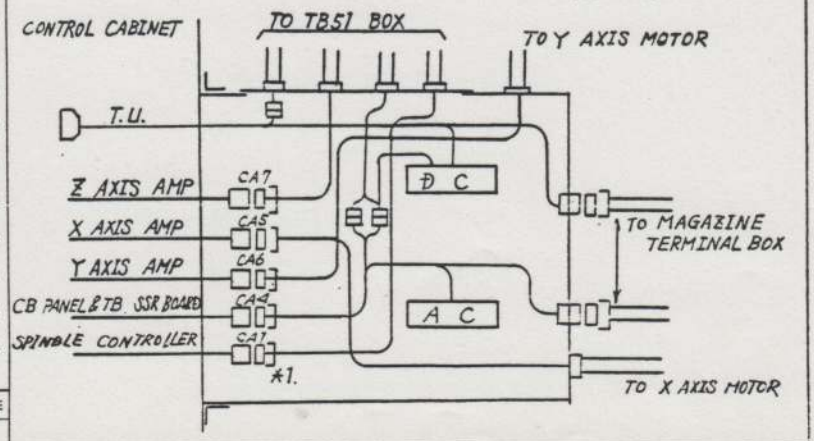

MOLEX CONNECTOR

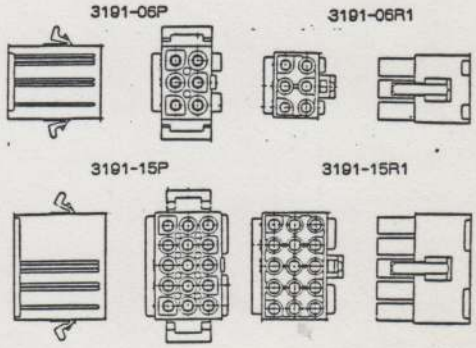

DRAWING NO. 4243081338
SHEET 3 OF 5

INDEX NUMBER | SHEET | LINE

APPROVED
DESIGNED
DRAWN MAR.3.'86

Mazak
YAMAZAKI MAZAK CORPORATION

TITLE VQC-15/40 TB41 BOX CONNECTION LAYOUT

CONTROL MEATROL
DRAWING NO. 4243081338
SHEET 3 OF 5
SIZE 3

SHEET | LINE
INDEX NUMBER

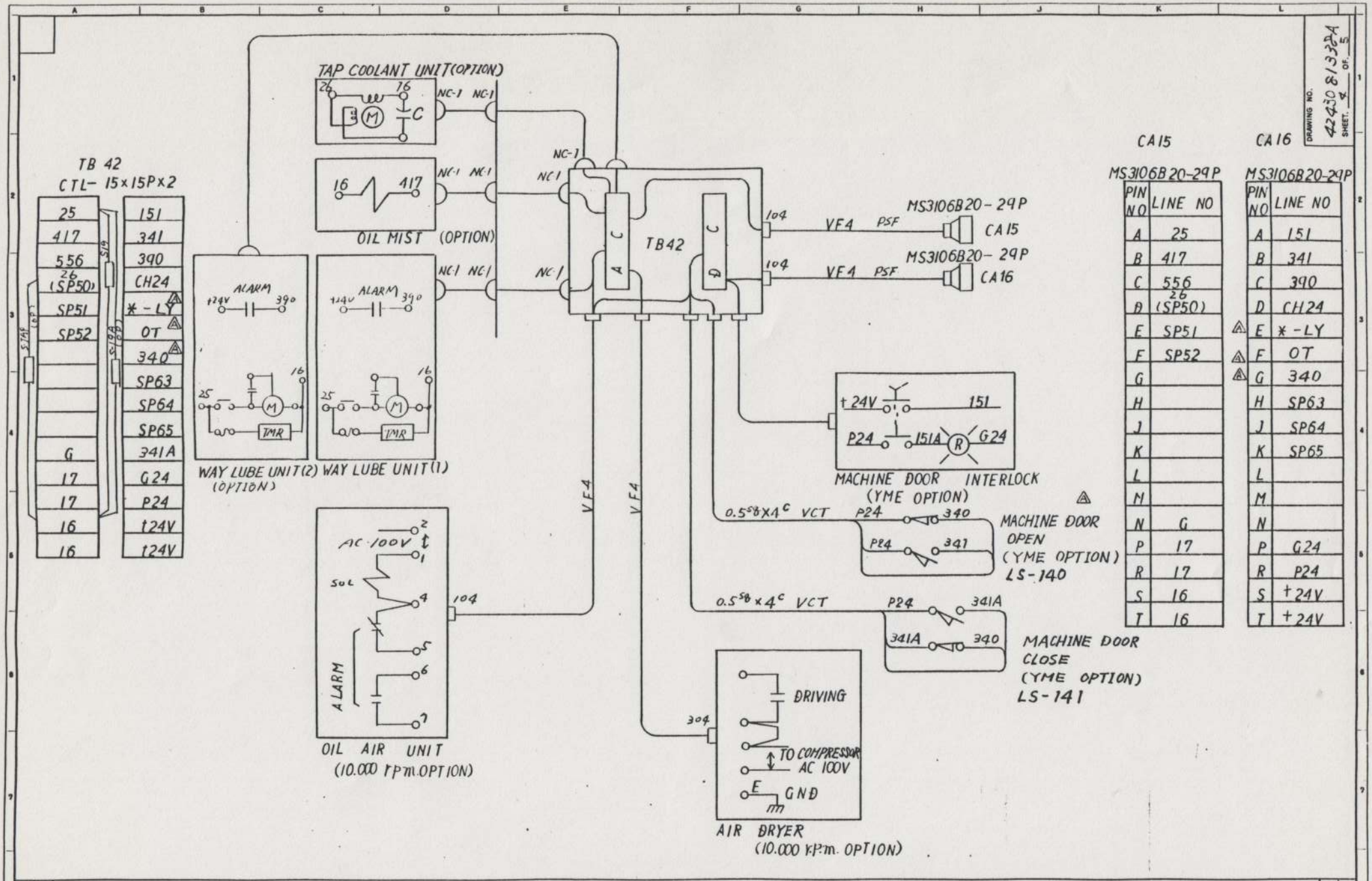

CA15 MS3106B20-29P PIN NO	LINE NO
A	25
B	417
C	556
D	26 (SP50)
E	SP51
F	SP52
G	
H	
J	
K	
L	
M	
N	G
P	17
R	17
S	16
T	16

CA16 MS3106B20-29P PIN NO	LINE NO
A	151
B	341
C	390
D	CH24
E	*-LY
F	OT
G	340
H	SP63
J	SP64
K	SP65
L	
M	
N	
P	G24
R	P24
S	+24V
T	+24V

△ DELETE DOOR INTERLOCK LS. ADD DOOR OPEN. CLOSE LS. Oct. 31. '86

DRN. BY K.M
DATE 11.10.'85
CHK'D BY H.S
DATE Aug 8.'87

Mazak
YAMAZAKI MAZAK CORPORATION

TITLE VQC15/40 TB42 BOX

CONTROL M2V
DRAWING NO. 42430 8133 8A
SHEET. 2 OF. 5
SIZE 3

TB43 CTL-15 × 45P

| | | |

INDEX NUMBER

SHEET | LINE

CNA 3,4,5 PIN No. 20 NOTHING

OCT. 4, '81 Y.N

APPROVED

DESIGNED K. Ogata

DRAWN

Mazak YAMAZAKI MAZAK CORPORATION

TITLE VQC15/40 DETAIL DIAGRAM of MS & MR CONNECTOR WIRE CONNECTION

CONTROL MAZATROL

DRAWING NO. 4243081340A

SHEET 3 OF

SIZE

SPINDLE ENCODER
MS-20-29

PIN NO.	LINE NO.
A	PA
B	SC
C	PB
D	
E	
F	
G	
H	P5H
J	
K	0H
L	
M	
N	$\overline{PA}$
P	$\overline{SC}$
R	$\overline{PB}$
S	
T	

☐ AXIS DETECTOR
MS-20-29

PIN NO.	LINE NO.
A	MS1
B	MS2
C	MO1
D	MO2
E	
F	MC1
G	MC2
H	
J	
K	TG1
L	TG2
M	
N	SG
P	P12 (+12V)
R	AG
S	M12 (-12V)
T	

☐ AXIS RESOLVER
MS-20-29

PIN NO.	LINE NO.
A	RS1
B	RS2
C	
D	
E	
F	RC1
G	RC2
H	RO1
J	RO2
K	
L	
M	
N	SG
P	
R	
S	
T	

☐ AXIS MAGNE SCALE DETE
MS 20-29 (OPTION)

PIN NO.	LINE NO.
A	Ua1
B	Ua2
C	
D	$\overline{Ua1}$
E	$\overline{Ua2}$
F	Ua0
G	$\overline{Ua0}$
H	
J	
K	
L	
M	
N	GND
P	GND
R	
S	
T	GND

CON-2 SPINDLE CONTROLLER
MR-20

1	2	3	4	5	6	7
AGA	OHS2	OHS1			N15C	
	8	9	10	11	12	13
	COM				P15C	
14	15	16	17	18	19	20
PA	RA	PB	RB			SS

CNA-3 (4,5) NC
MR-20

1	2	3	4	5	6	7
AG	M12				P12	AG
	8	9	10	11	12	13
					RS1	RS2
14	15	16	17	18	19	20
RC1	RC2	RO1	RO2	TG1	TG2	

(FOR RESOLVER FEED BACK)

CON-A SPINDLE CONTROLLER
MR-20

1	2	3	4	5	6	7
0H	0H	0H	P5H	P5H	P5H	
	8	9	10	11	12	13
14	15	16	17	18	19	20
SC	$\overline{SC}$	PA	$\overline{PA}$	PB	$\overline{PB}$	

CNA-3 (4,5) NC
MR-20 (OPTION)

1	2	3	4	5	6	7
GND	GND	GND				
	8	9	10	11	12	13
14	15	16	17	18	19	20
Ua0	$\overline{Ua0}$	Ua1	$\overline{Ua1}$	Ua2	$\overline{Ua2}$	

(FOR SCALE FEED BACK)

ZP3 AXIS DETECTOR MR-20 AMP.

1	2	3	4	5	6	7
AG	-12V	MO2	MO1	SG	+12V	AG
	8	9	10	11	12	13
	MS1	MS2	MC1	MC2	S1	S2
14	15	16	17	18	19	20
				TG1	TG2	

DRAWING NO. 4243081340A

SHEET ___ OF ___

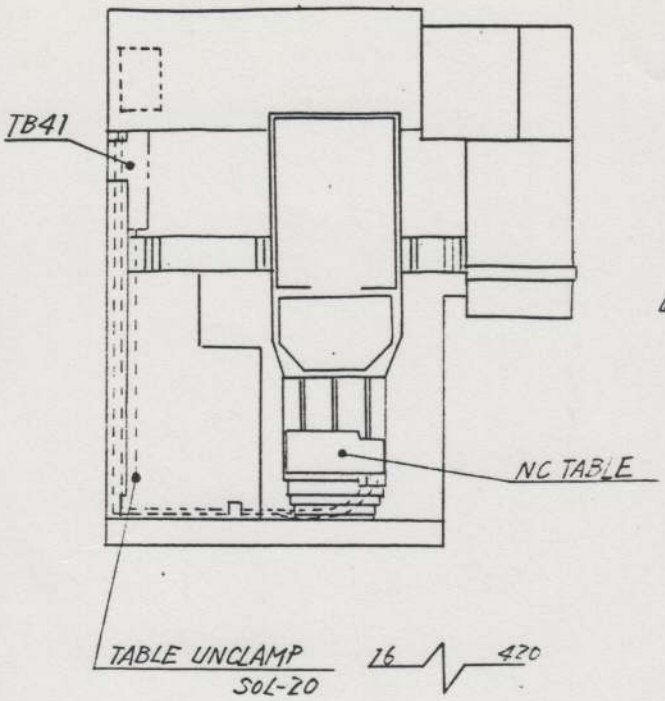

MS3106B-28-11S

PIN No	SIGNAL NAME
A	+24V
B	+24V
C	INHRLS
D	
E	
F	G1B
G	G2B
H	
⚠ I	
J	A4U
K	A4V
L	A4W
M	G
N	
P	
R	+24V
S	DEC4
T	
U	
V	
⚠ W	
⚠ X	

MS3108B-20-29S

PIN NO.	SIGNAL NAME	
A	RS1	※
B	RS2	
C	MŌ1	※
D	MŌ2	
E		
F	RC1	※
G	RC2	
H	RŌ1	※
J	RŌ2	
K	TG2	※
L	TG1	
M		
N	SG	
P	+12V	※
R	AG	※
S	-12V	
T		

MR-20

PIN NO.	SIGNAL NAME	
1	AG	※
2	-12V	
3	MŌ2	※
4	MŌ1	
5		
6	+12V	※
7	AG	
8		
9		
10		
11		
12	RS1	※
13	RS2	
14	RC1	※
15	RC2	
16	RŌ1	※
17	RŌ2	
18	TG2	※
19	TG1	
20	SG	

※ TWIST PAIR SHEELD

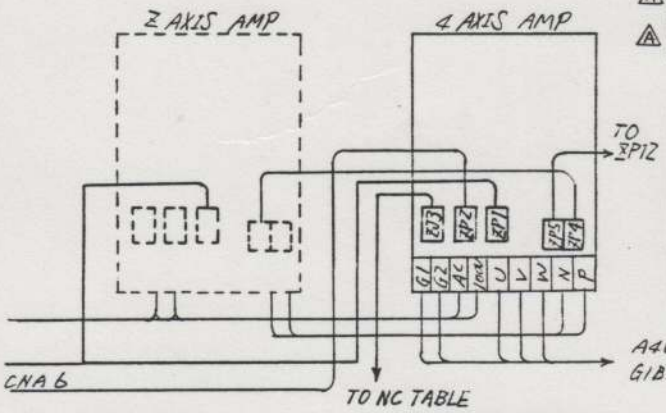

4TH AXIS DUMMY LOAD CONNECTOR

DETECTING NO SIGNAL & MOTOR OVER HEAT ALARM NEGLECT

MS3101A-20-29P MS3101A-28-11P

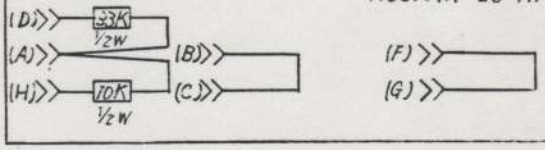

WIRE CABLE TACHOGENE & RESOLVER

CONNECTOR		CONNECTION SIDE	WIRE NAME	WIRE
ELECTRIC CABINET 4 AXIS AMP TB41	40000009-J260 FBA-6 VFC-106B MS3108B-28-11S	NC TABLE POWER & SIGNAL	A4U. A4V A4W, G G1B, G2B DEC4, INHRLS +24V. +24V	3.5SQ BLACK x3 Y/G x1 0.75SQ BLUE x8
ELECTRIC CABINET 4 AXIS AMP ZP3	40000009-J261 FBA-6 VFC-106B MR-20-WS MR-20-MY MS3108B-20-29S	NC TABLE TACHOGENE & RESOLVER	RS1, RS2 RC1, RC2 RŌ1. RŌ2 MŌ1. MŌ2 TG1, TG2 +12V, AG -12V. AG SG	0.5SQ TWIST PAIR SHIELD x7
NC CABINET CNA6	40000009-J262 ⚠ EARTH 2SQ Y/G x1 2.5m MR-20LF MR-20WS MR-20F.	ELECTRIC CABINET 4 AXIS AMP ZJ2	RS1. RS2 RC1. RC2 RŌ1, RŌ2 SG	0.5SQ TWIST PAIR SHIELD x3

INDEX NUMBER

SHEET	LINE
⚠ CNA6 PIN NO 20 NOTHING (TO EARTH MR), MS3106B-28-11S ADD WRITE (OCT. 4'86 Y.N)	01–52

APPROVED

DESIGNED K.Ikeda

DRAWN T.Okada MAR. 27. '86

Mazak YAMAZAKI MAZAK CORPORATION

TITLE VQC-15/40 NC TABLE (OPTION)

CONTROL MAZATROL

DRAWING NO. 4243081346A

SHEET 3 OF SIZE

DRAWING NO. 4243081346A SHEET OF

INDEX NUMBER

SHEET | LINE

CNA3.5 PIN NO 20 NOTHING (TO EARTH BAR) OCT.4.'86 YN

APPROVED

DESIGNED K.Nozawa

DRAWN

Mazak
YAMAZAKI MAZAK CORPORATION

TITLE VQC/5/40 CABLE ASSY (1)

CONTROL MAZATROL

DRAWING NO. 4243081350A

SHEET OF

SIZE 3

SHEET | LINE

INDEX NUMBER

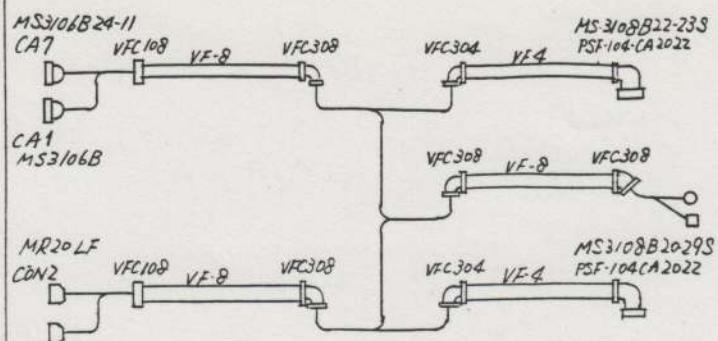

Z AXIS SERVO MOTOR

SPINDLE MOTOR

SPINDLE ROTARY ENCODER

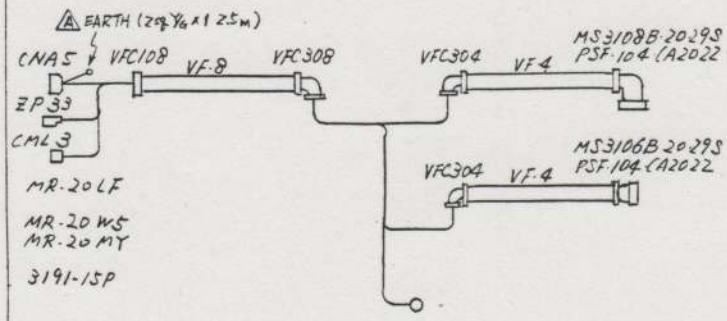

Z AXIS DETECTOR
0.5sq x 6 TWIST PAIR SHIELD

Z AXIS RESOLVER
0.5sq x 3 TWIST PAIR SHIELD

TB51. DC LINE

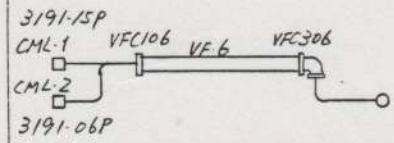

TB51 AC LINE

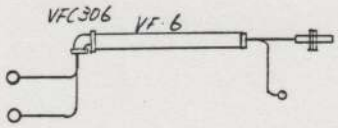

TOOL CLAMP PRS +24V, 209, 0G
TOOL UNCLAMP PRS. +24V, 208, 0G
SPINDLE TOOL DETECTOR +24V, 382, 0G
SPINDLE AIR BLAST SOL 415, 16
AIR JET SOL. (OPTION) 461. 16
0.75sq x 4 RED.

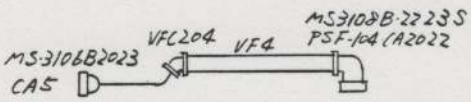

X AXIS SERVO MOTOR

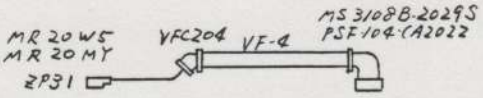

X AXIS SERVO DETECTOR
0.5sq x 6 TWIST PAIR SHIELD.

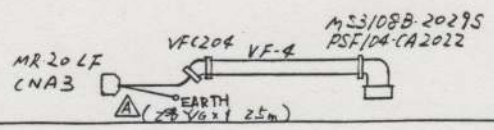

X AXIS SERVO RESOLVER
0.5sq x 3 TWIST PAIR SHIELD

DRAWING NO. 4243081350A
SHEET ____ OF ____

	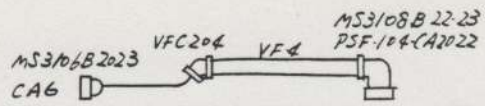	Y AXIS SERVO MOTOR
	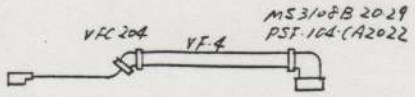	Y AXIS SERVO DETECTOR 0.5 sq × 6 TWIST PAIR SHIELD
	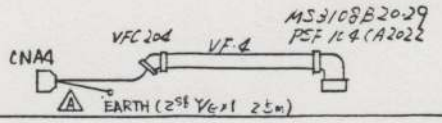	Y AXIS SERVO RESOLVER 0.5 sq × 3 TWIST PAIR SHIELD
	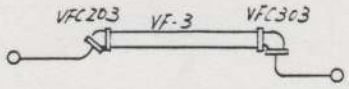	HYDRAULIC MOTOR U11, V11, W11 2 sq × 3 BLACK G 2 sq × 1 YELLOW/GREEN
	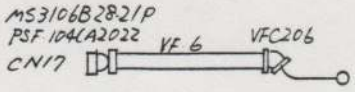	TB41 – TB43 CONNECT DC LINE
	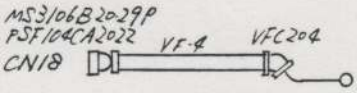	TB41 - TB43 CONNECT AC LINE
	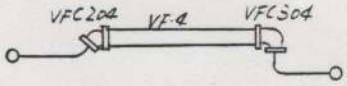	FLOOD COOLANT MOTOR U21, V21, W21 1.25 sq × 3 BLACK G 1.25 sq × 1 YELLOW/GREEN
	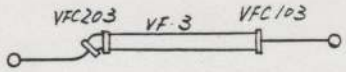	MAGAZINE SW. BOX. EMERGENCY STOP SW. EMB, EMC TOOL SELECT SW. +24V, 150 TOOL SET SW. +24V, 862, 346.
	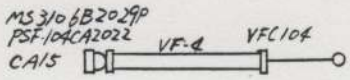	CONTROL CABINET – TB42 CONNECT AC LINE
	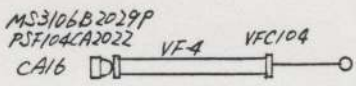	CONTROL CABINET – TB42 CONNECT DC LINE.
	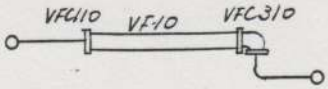	TRANSF. BOX. R1, S1, T1 14 sq × 3 BLACK KIV R2, S2, T2 5.5 sq × 3 BLACK KIV 10, 16, XA, XB 2 sq × 4 RED KIV OHT1, OHT2, 128, 131 1.25 sq × 4 RED KIV G. 8 sq × 1 YELLOW/GREEN.

INDEX NUMBER

SHEET | LINE

CNA4 PIN NO. 20 NOTHING (TO EARTH BAR)

OCT. 4 '86 YN

APPROVED

DESIGNED

DRAWN

Mazak
YAMAZAKI MAZAK CORPORATION

TITLE
V80C/S/40
CABLE ASSY (2)

CONTROL
MAZATROL

DRAWING NO.
4243081351A

SHEET OF

SIZE
3

SHEET | LINE

INDEX NUMBER

DRAWING NO.
4243081351A
SHEET OF

INDEX NUMBER

SHEET | LINE

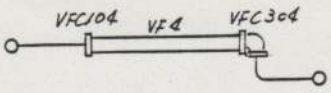

CHILLER UNIT (OPTION)
R12, S12, T12 2sq x 3 BLACK KIV.
CH2, CH4 2sq x 2 RED KIV
CH24, +24V 0.5sq TWIST PAIR SHIELD
G 1.25sq x 1 YELLOW/GREEN

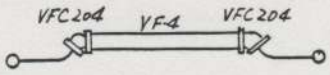

CHIP CONVEYOR SW BOX (OPTION)
U44, V44, W44,
U45, V45, W45 2sq x 6 BLACK KIV

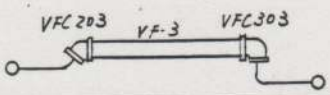

CHIP CONVEYOR MOTOR (OPTION)
U45, V45, W45 2sq x 3 BLACK KIV
G 2sq x 1 YELLOW/GREEN

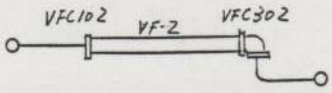

MACHINE DOOR INTERLOCK SW (OPTION)
+24V, 151, P24, G24, 341
0.5sq x 6 BLUW

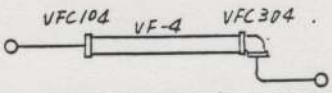

AIR DRYER (10,000 r.p.m. OPTION)
17, 16, 555 1.25sq x 3 RED
G 1.25sq x 1 YELLOW/GREEN

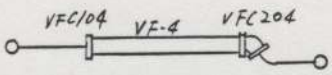

FAIN LUB. UNIT (10,000 r.p.m. OPTION)
555, 556, 16 1.25sq x 3 RED
CH24, +24V

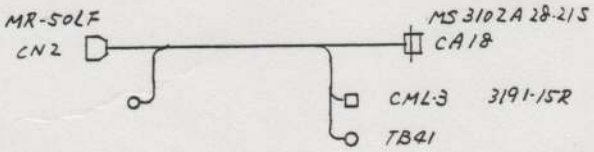

T.U. ⟷ TB41 BOX

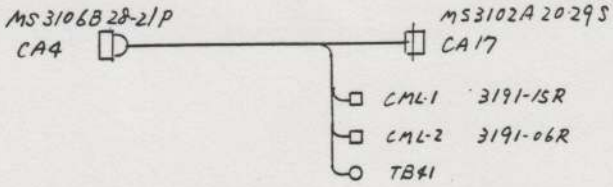

TB41 BOX

APPROVED
DESIGNED K. Shima
DRAWN

Mazak
YAMAZAKI MAZAK CORPORATION

TITLE V80C-15/40 CABLE A'SSY (3)

CONTROL MAZATROL
DRAWING NO. 4243081352
SHEET OF
SIZE 3

SHEET | LINE
INDEX NUMBER

DRAWING NO. 4243081352
SHEET ____ OF ____

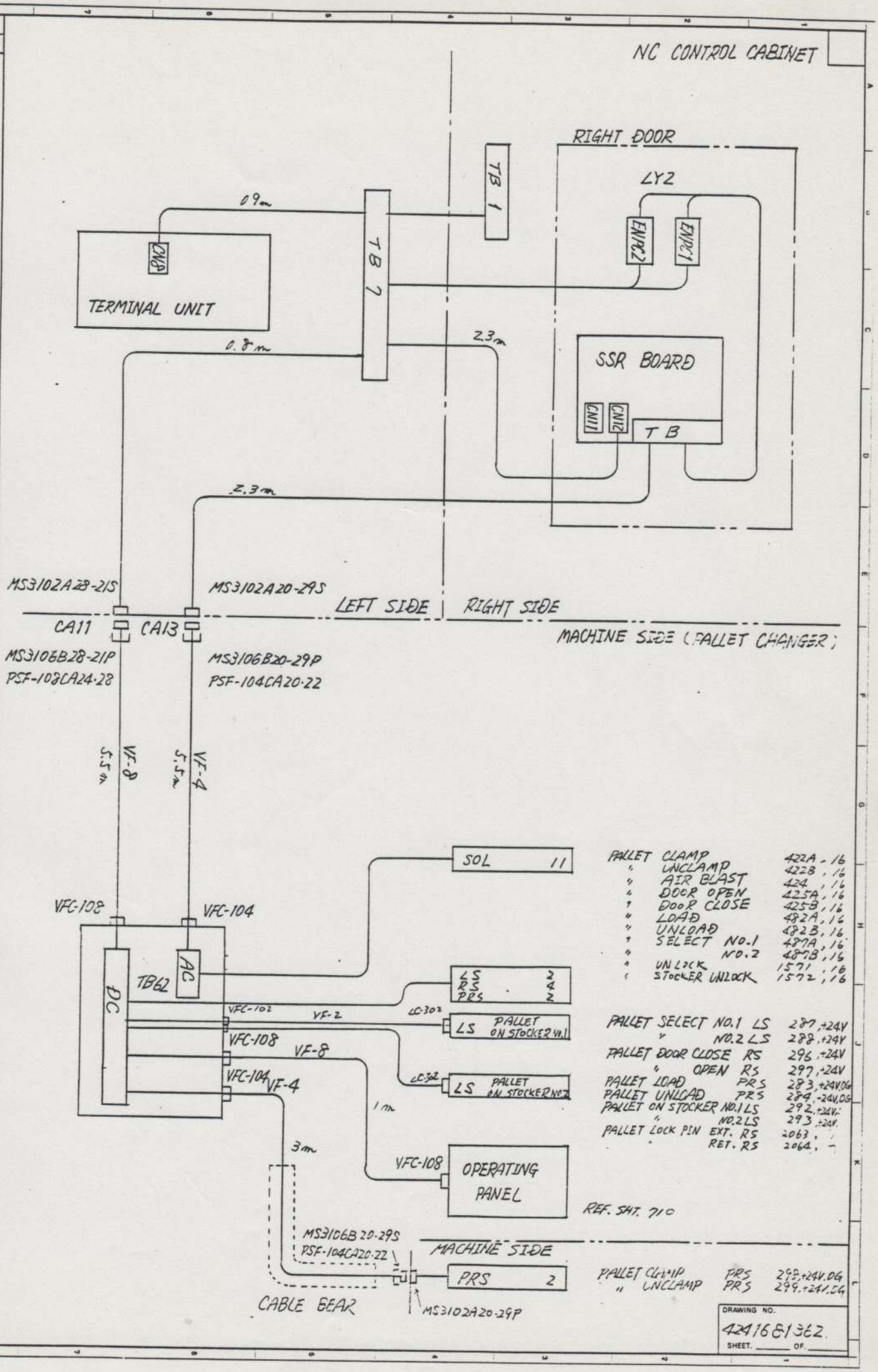
NC CONTROL CABINET
RIGHT DOOR
LY2
ENPC2
ENPC1
TB 1
TB 2
0.9m
TERMINAL UNIT
0.8m
2.3m
SSR BOARD
CN11
CN12
TB
2.3m
MS3102A28-21S
MS3102A20-29S
LEFT SIDE
RIGHT SIDE
CA11
CA13
MACHINE SIDE (PALLET CHANGER)
MS3106B28-21P
PSF-108CA24-28
MS3106B20-29P
PSF-104CA20-22
5.5m
VF-8
5.5m
VF-4
SOL 11
VFC-108
VFC-104
PC
AC
TB62
LS 2
RS 4
PRS 2
VFC-102
VF-2
LC-302
LS PALLET ON STOCKER NO.1
VFC-108
VF-8
LC-302
LS PALLET ON STOCKER NO.2
VFC-104
VF-4
1m
3m
VFC-108
OPERATING PANEL
REF. SHT. 710
MS3106B 20-29S
PSF-104CA20-22
MACHINE SIDE
PRS 2
CABLE BEAR
MS3102A20-29P
PALLET CLAMP 422A, 16
" UNCLAMP 422B, 16
" AIR BLAST 424, 16
" DOOR OPEN 425A, 16
" DOOR CLOSE 425B, 16
" LOAD 482A, 16
" UNLOAD 482B, 16
" SELECT NO.1 487A, 16
" NO.2 487B, 16
" UNLOCK 1571, 16
" STOCKER UNLOCK 1572, 16
PALLET SELECT NO.1 LS 287, +24V
" NO.2 LS 288, +24V
PALLET DOOR CLOSE RS 296, +24V
" OPEN RS 297, +24V
PALLET LOAD PRS 283, +24V.DC
PALLET UNLOAD PRS 284, +24V.DC
PALLET ON STOCKER NO.1 LS 292, +24V.
" NO.2 LS 293, +24V.
PALLET LOCK PIN EXT. RS 2063,
" RET. RS 2064,
PALLET CLAMP PRS 298, +24V.DC
" UNCLAMP PRS 299, +24V.DC
DRAWING NO.
424168 1362
SHEET. OF.
INDEX NUMBER
SHEET
LINE
DRN. BY K. Hattori
DATE May 3 '85
CHK'D BY
DATE May 3 '85
Mazak
YAMAZAKI MAZAK CORPORATION
TITLE
VQC-15/40 2PC
CONNECTION SYSTEM
DIAGRAM
CONTROL M2V
DRAWING NO. 424168 1362
SHEET 3
SIZE
SHEET
LINE
INDEX NUMBER

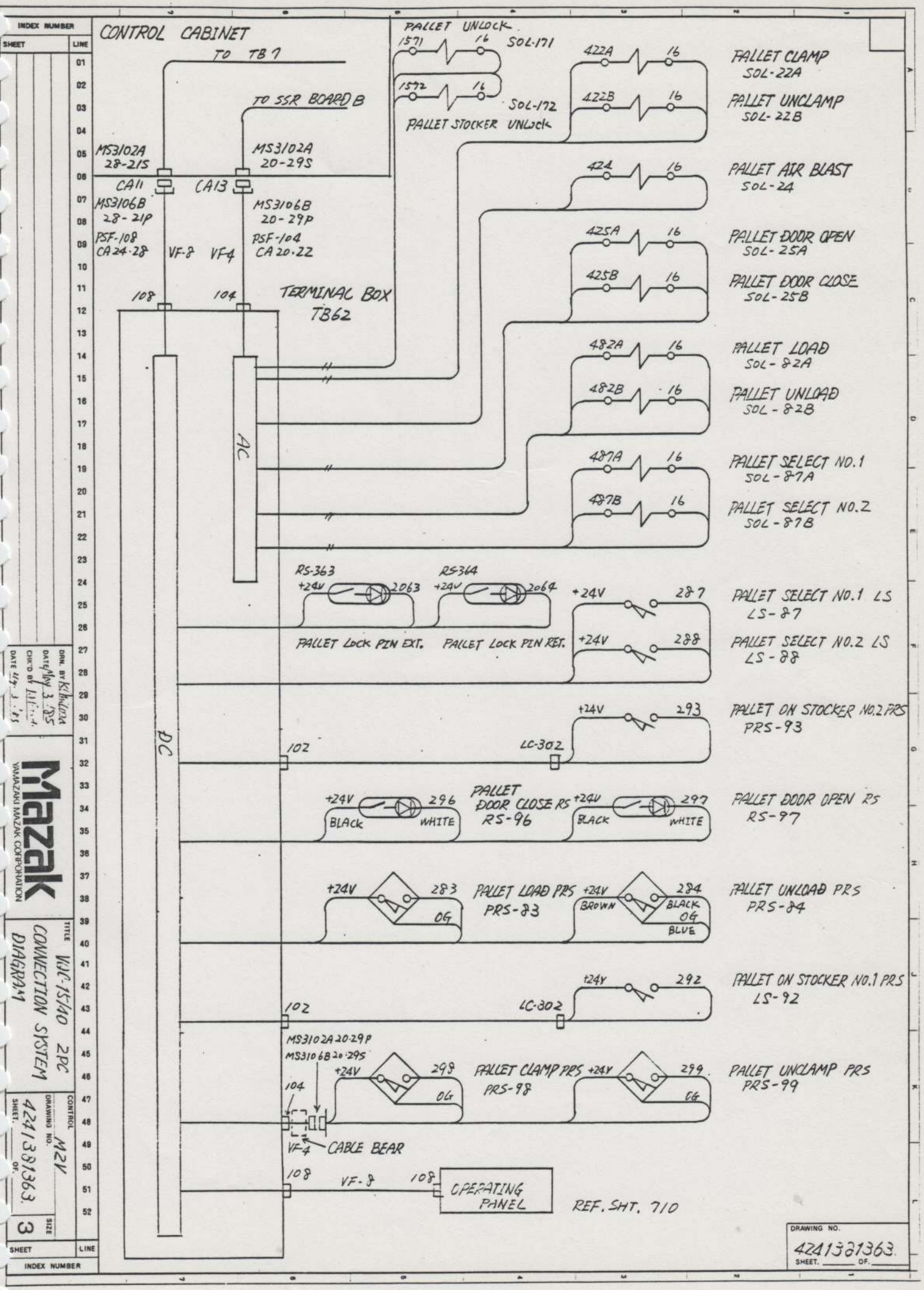
CONTROL CABINET
TO TB7
TO SSR BOARD B
MS3102A 28-21S
MS3102A 20-29S
CA11
CA13
MS3106B 28-21P
MS3106B 20-29P
PSF-108 CA24·28
VF-8
VF-4
PSF-104 CA20·22
108
104
TERMINAL BOX TB62
AC
DC
PALLET UNLOCK
1571
16
SOL-171
1572
SOL-172
PALLET STOCKER UNLOCK
422A
422B
PALLET CLAMP SOL-22A
PALLET UNCLAMP SOL-22B
424
PALLET AIR BLAST SOL-24
425A
425B
PALLET DOOR OPEN SOL-25A
PALLET DOOR CLOSE SOL-25B
482A
482B
PALLET LOAD SOL-82A
PALLET UNLOAD SOL-82B
487A
487B
PALLET SELECT NO.1 SOL-87A
PALLET SELECT NO.2 SOL-87B
RS-363
+24V
2063
RS-364
2064
PALLET LOCK PIN EXT.
PALLET LOCK PIN RET.
287
288
PALLET SELECT NO.1 LS LS-87
PALLET SELECT NO.2 LS LS-88
293
LC-302
102
PALLET ON STOCKER NO.2 PRS PRS-93
296
BLACK
WHITE
PALLET DOOR CLOSE RS RS-96
297
PALLET DOOR OPEN RS RS-97
283
OG
PALLET LOAD PRS PRS-83
284
BROWN
BLACK
BLUE
PALLET UNLOAD PRS PRS-84
292
PALLET ON STOCKER NO.1 PRS LS-92
MS3102A 20-29P
MS3106B 20-29S
298
PALLET CLAMP PRS PRS-98
299
PALLET UNCLAMP PRS PRS-99
CABLE BEAR
OPERATING PANEL
REF. SHT. 710
INDEX NUMBER
SHEET
LINE
DRN. BY
DATE
CHK'D BY
Mazak
YAMAZAKI MAZAK CORPORATION
TITLE
WVC-15/40 2PC CONNECTION SYSTEM DIAGRAM
CONTROL
M2V
DRAWING NO.
4241381363
SHEET
OF
SIZE
3
DRAWING NO.
4241381363
SHEET
OF

CA-11

MS3102A 28-21

Pin No.	Line No.
A	57A
B	57B
C	283
D	284
E	287
F	288
G	292
H	293
J	296
K	297
L	298
M	299
N	851
P	852
R	853
S	854
T	855
U	856
V	857
W	858
X	859
Z	860
a	861
b	ENPC
c	PCY1
d	PCY2
e	2063
f	2064
g	2065
h	2066
j	SP7
k	SP8
m	
n	0G
p	0G
r	+24V
s	+24V

CA

MS3102A 28-21

Pin No.	Line No.
A	
B	
C	
D	
E	
F	
G	
H	
J	
K	
L	
M	
N	
P	
R	
S	
T	
U	
V	
W	
X	
Z	
a	
b	
c	
d	
e	
f	
g	
h	
j	
k	
m	
n	
p	
r	
s	

CA

MS3102A 28-21

Pin No.	Line No.
A	
B	
C	
D	
E	
F	
G	
H	
J	
K	
L	
M	
N	
P	
R	
S	
T	
U	
V	
W	
X	
Z	
a	
b	
c	
d	
e	
f	
g	
h	
j	
k	
m	
n	
p	
r	
s	

CA

MS3102A 28-21

Pin No.	Line No.
A	
B	
C	
D	
E	
F	
G	
H	
J	
K	
L	
M	
N	
P	
R	
S	
T	
U	
V	
W	
X	
Z	
a	
b	
c	
d	
e	
f	
g	
h	
j	
k	
m	
n	
p	
r	
s	

CA-13

MS3102A 20-29

Pin No.	Line No.
A	422A
B	422B
C	424
D	425A
E	425B
F	482A
G	482B
H	487A
J	487B
K	1571
L	1572
M	SP5
N	SP6
P	
R	
S	16
T	16

CA 14

MS3102A 20-29

Pin No.	Line No.
A	298
B	+24V
C	0G
D	
E	
F	
G	299
H	+24V
J	0G
K	
L	
M	
N	
P	
R	
S	
T	

INDEX NUMBER

SHEET | LINE

DRN. BY Kikuchi DATE Apr 3-85

CHK'D BY Kikuchi DATE Apr 3-85

Mazak

YAMAZAKI MAZAK CORPORATION

TITLE VQC-15/40 2PC CANNON CONNECTOR CONNECTION

CONTROL MZV

DRAWING NO. 42413 81365

SHEET ___ OF ___

SIZE 3

SHEET | LINE

INDEX NUMBER

DRAWING NO. 42413 81365

SHEET ___ OF ___

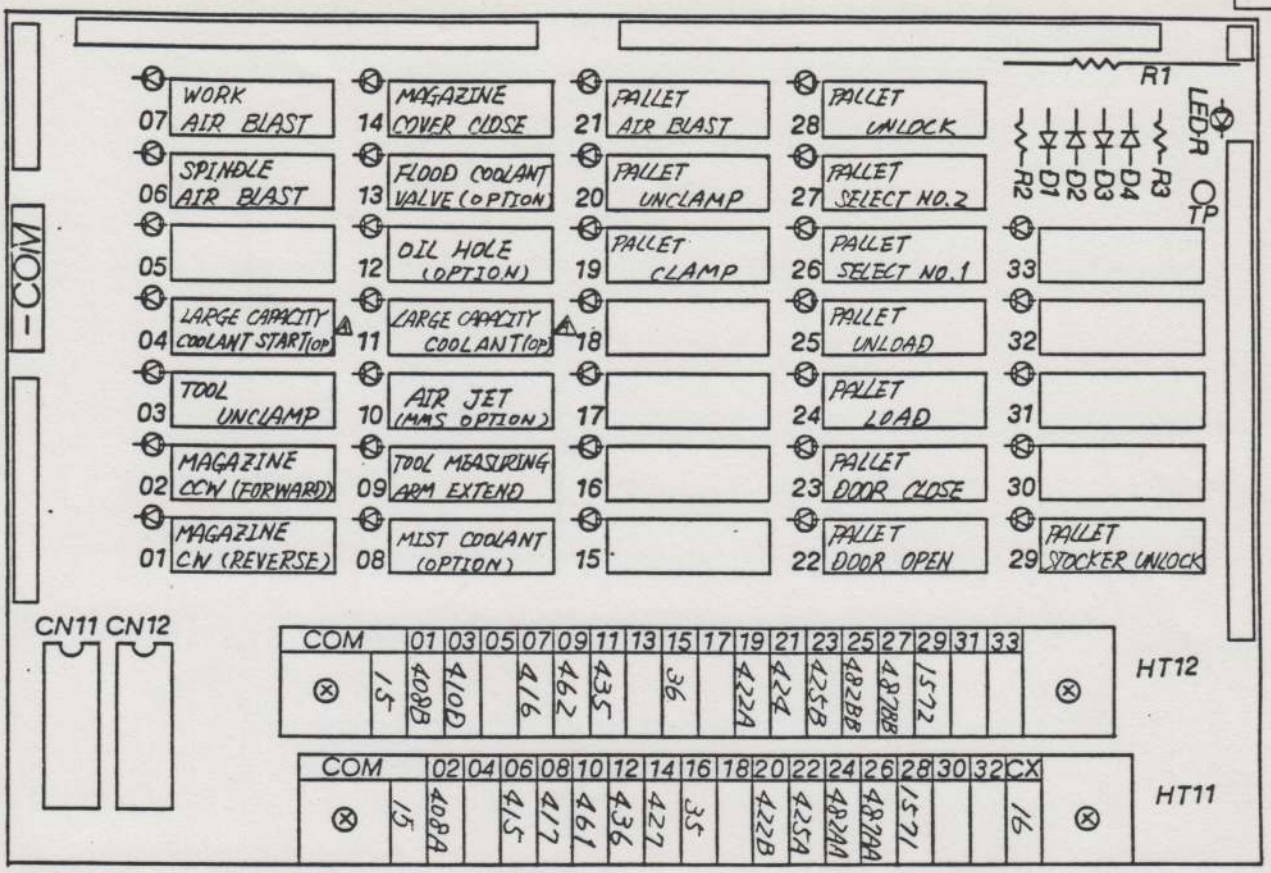

708B	708A	710	754	SSP2	715	716
717	762	761	735	736	SSP3	
727	836	835			0G	0G

722A	722B	724	725A	725B	782A	782B
787A	787B	1871	1872			
					0G	0G

INDEX NUMBER

SHEET | LINE

ADD LARGE CAPACITY COOLANT.

DWN. BY K.Ikeda DATE ___ CHK'D BY ___ DATE ___

Mazak
YAMAZAKI MAZAK CORPORATION

TITLE W15/40 2PC.g/Tow
SSR BOARD
(D2W102F33QB)

CONTROL M2V
DRAWING NO. 42416-91366A
SHEET ___ OF ___
SIZE 3

SHEET | LINE

INDEX NUMBER

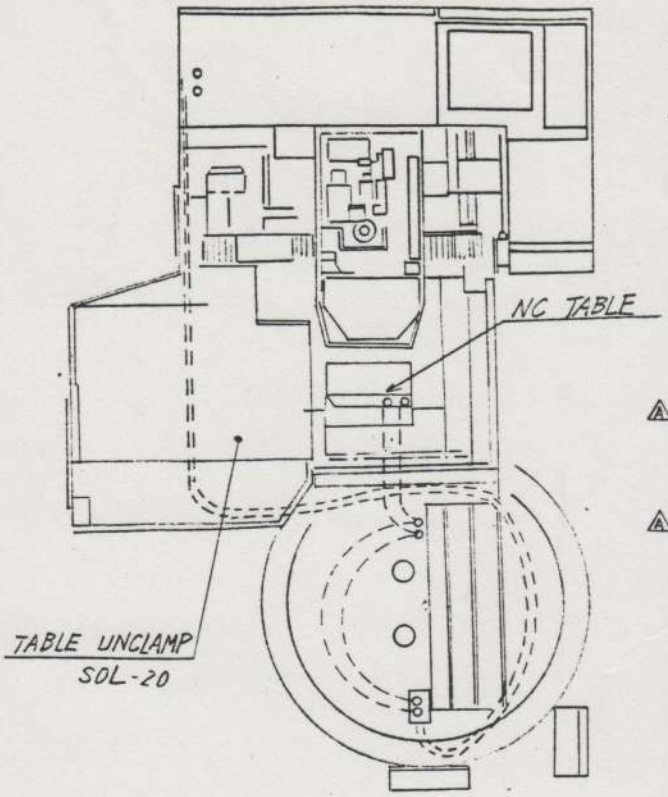

MS3108B-28-11P

PIN NO.	SIGNAL NAME
A	+24V
B	+24V
C	INHRLS
D	
E	
F	G1B
G	G2B
H	*-LX
I	
J	A4U
K	A4V
L	A4W
M	G
N	
P	
R	+24V
S	DEC4
T	
U	
V	
W	
X	

MS3108B-20-29P

PIN NO.	SIGNAL NAME	
A	RS1	*
B	RS2	
C	MO1	*
D	MO2	
E		
F	RC1	*
G	RC2	
H	RO1	*
J	RO2	
K	TG2	*
L	TG1	
M		
N	SG	
P	+12V	*
R	AG	*
S	-12V	
T		

MR-20

PIN NO.	SIGNAL NAME	
1	AG	*
2	-12V	
3	MO2	*
4	MO1	
5		
6	+12V	*
7	AG	
8		
9		
10		
11		
12	RS1	*
13	RS2	
14	RC1	*
15	RC2	
16	RO1	*
17	RO2	
18		
19		
20	SG	

* TWIST PAIR SHEELD

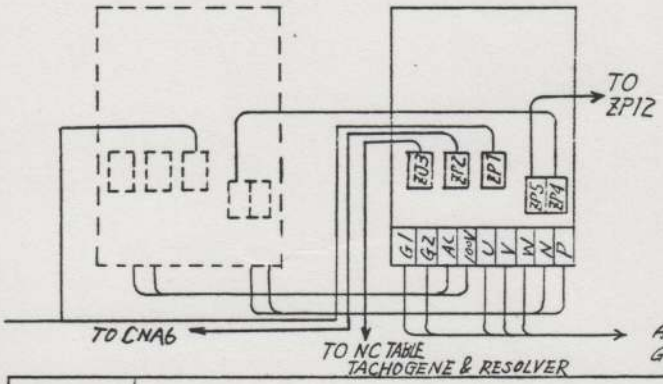

4TH AXIS DUMMY LOAD CONNECTOR

DETECTING NO SIGNAL & MOTOR OVERHEAT ALARM NEGLECT

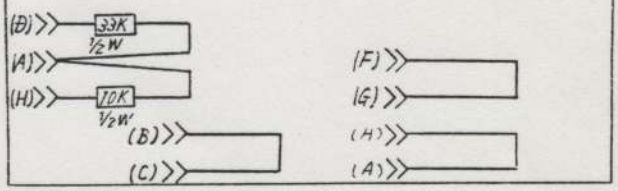

A4U, A4V, A4W
G1B, G2B
] TO NC TABLE

CONNECTION		CONNECTION	WIRE
Z.P.C. JUNCTION BOX	40000009-J283 FBA-6 MS3108B-28-11P MS3108B-28-11S	NC TABLE POWER & SIGNAL	3.5SQ BLACK x3 Y/G x1 0.75SQ BLUE x8
CONTROL CABINET	40000009-J284 VF6 VF6 VFC-106 MS3102A-28-11S	Z.P.C. JUNCTION BOX	∫
Z.P.C. JUNCTION BOX	40000009-J285 FBA-6 PSF106 CA2022B MS3108B-20-29P PSF106-CA2022B MS3108B-20-29S	NC TABLE TACHOGENE & RESOLVER	0.5SQ TWIST PAIR SHIELD x7
CONTROL CABINET ZP3	40000009-J286 ZP3 VF-6 VF-6 MR-20MY MR-20WS VFC-106 VFC306 VFC-106 VFC-106 MS3102A-20-29S	Z.P.C. JUNCTION BOX	∫
CONTROL CABINET	40000009-J262 CNA6 ZJ2 EARTH 2SQ VGX1 2.5m MR-20LFH MR-20F MR-20WS	4 AXIS AMP ZJ2	0.5SQ TWIST PAIR SHIELD x3

INDEX NUMBER

SHEET	LINE
CNA6 PIN NO.20 NOTHING (TO EARTH BAR), MS3108B-28-11P CHANGE (OCT.4.'86 Y.N)	01–22

APPROVED

DESIGNED K. Nishiura

DRAWN V. Oikawa MAR.29.'86

Mazak YAMAZAKI MAZAK CORPORATION

TITLE VQC-15/40 NC TABLE (Z.P.C. OPTION)

CONTROL MAZATROL

DRAWING NO. 4243081371A

SHEET 3 OF

SIZE

SHEET LINE

INDEX NUMBER

DRAWING NO. 4243081371A

SHEET OF

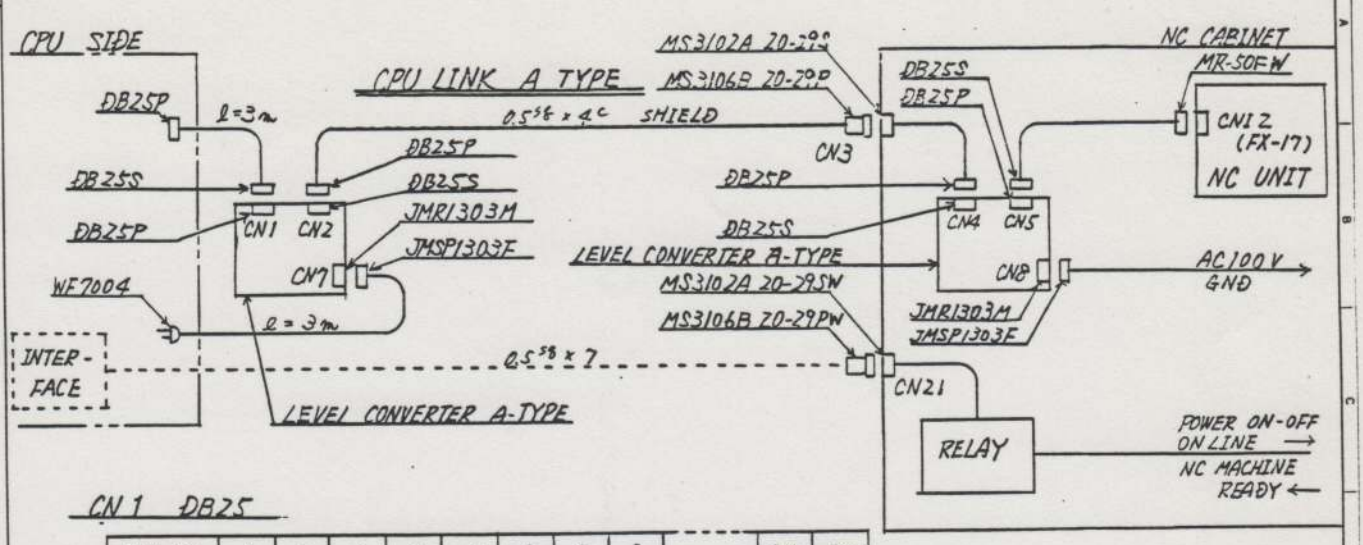

CN1 DB25

PIN NO.	1	2	3	4	5	6	7	8		24	25
SIGNAL	FG	SD	RD	—	—	—	SG	—		—	—

CN2 DB25

PIN NO.	1	2	3	4		22	23	24	25
SIGNAL	—	SDA	RDA	—		—	12AA	12BA	—

CN7, 8 JMSP1303E

PIN NO.	1	2	3
SIGNAL	100A	100B	GND

CN3 MS3106B 20-29P ; MS3102A 20-29S

PIN NO.	A	B	C	D		K	L		S	T
SIGNAL	—	SDA	RDA	—		12AA	12BA		—	—

CN4 DB25

PIN NO.	1	2	3	4		22	23	24	25
SIGNAL	FGA	RDA	SDA	—		—	12BA	12AA	—

CN5 DB25

PIN NO.	1	2	3	4		7	8		24	25
SIGNAL	FG	SD	RD	—		SG	—		—	—

CN12 MR-50MW

PIN NO.	—	9	10	11	12	13	14	15	16	28	50
SIGNAL	—	FG	SD	RD	RTS	CTS	DSR	SG	DTR	—	—

CN21 MS3106B 20-29PW , MS3102A 20-29SW

PIN NO.	A	B	C	D	E	F		J	K		T
SIGNAL	Z11	Z12	Z19	P24A	—	G24		Z31	ZGD		—

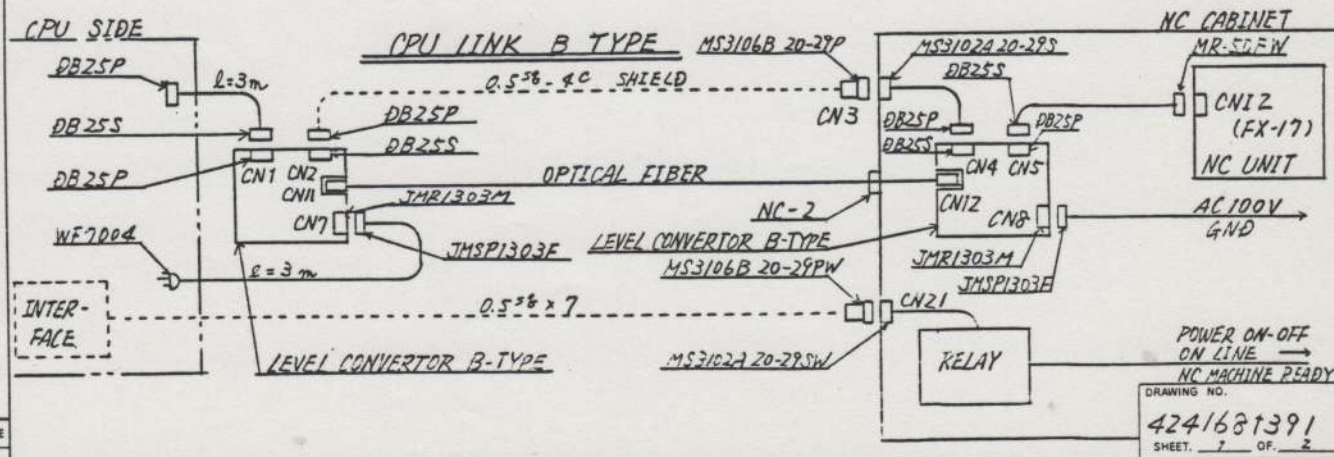

DRAWING NO. 4241681391
SHEET 1 OF 2

INDEX NUMBER
SHEET LINE

DRN. BY K.Ikeda DATE
CHK'D BY H.S DATE Aug 8.83

Mazak
YAMAZAKI MAZAK CORPORATION

TITLE VAC-15/40
CPU LINK CONNECTION (OPTION)

CONTROL M2V
DRAWING NO. 4241681391
SHEET 1 OF 2
SIZE 3

SHEET LINE
INDEX NUMBER

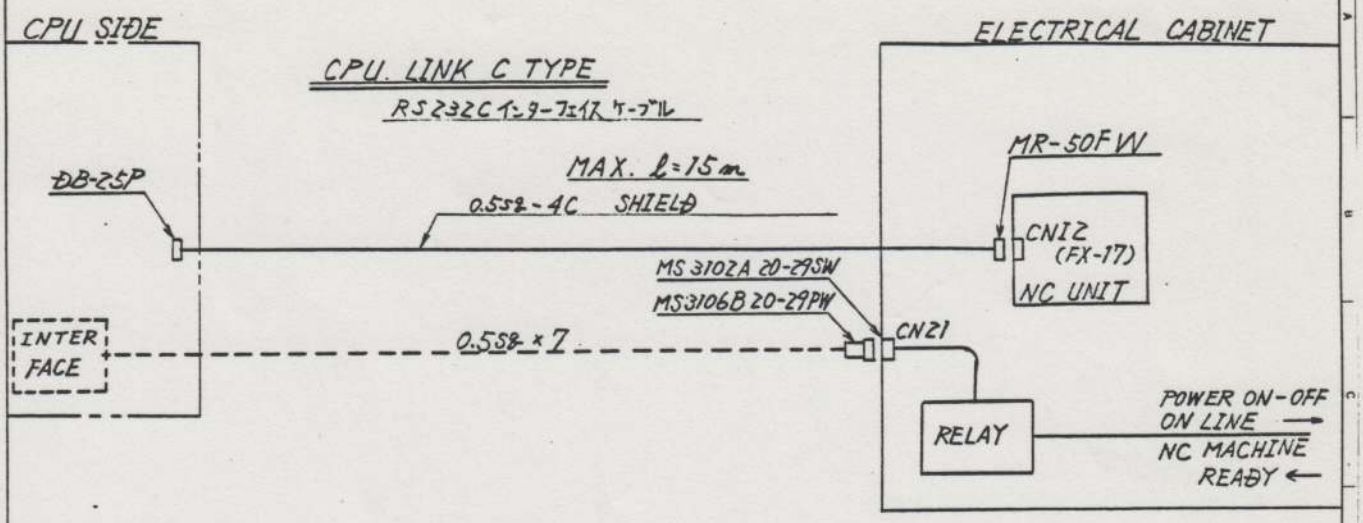

DB-25P

PIN NO.	1	2	3	4	5	6	7	8	20	24	25
SIGNAL	FG	SD	RD	RTS	CTS	DSR	SG	—	DT	—	—

Short Circuit

CN12 MR-50MW

PIN NO.	—	9	10	11	12	13	14	15	16	28	50
SIGNAL	—	FG	SD	RD	RTS	CTS	DSR	SG	DTR	—	—

Short Circuit

CN21 MS3106B 20-29PW, MS3102A 20-29SW

PIN NO.	A	B	C	D	E	F	J	K	T
SIGNAL	Z11	Z12	Z19	P24A	—	G24	Z31	ZGD	—

INDEX NUMBER

SHEET | LINE

DRN. BY V. Ichiuchi DATE Mar. 19. '85
CHK'D BY ____ DATE ____

Mazak
YAMAZAKI MAZAK CORPORATION

TITLE VQC-15/40
CPU. LINK CONNECTION
(OPTION) (C TYPE)

CONTROL MAZATROL
DRAWING NO. 4241681391
SHEET 2 OF 2
SIZE 3

SHEET | LINE
INDEX NUMBER

DRAWING NO. 4241681391
SHEET 2 OF 2

ELEMENTARY DIAGRAM LIST

SHEET	TITLE	DRAWING NO.
01	LINE POWER SUPPLY (1)	30 4241681401 1/2 2/2 A
02	do. (2)	3081402 1/2, 2/2
03	SPINDLE DRIVE	1681403
04	SERVO DRIVE	3081404A 1/4 ~ 4/4
05	MOTOR CONTROL	3081405
06	POWER CONTROL CIRCUIT	1681406 B
07	MOTION SWITCH INPUT (1)	3081407 A
08	do. (2)	3081408 A
09	do. (3)	1681409 A
10	do. (4)	3081410 A
11	do. (5) SKIP SIGNAL CONTROL	1681411
12	RELAY DRIVE (1)	3081412 A
13	do. (2)	1681413
14	SOLENOID DRIVER	1681414A 1/2, 2/2
21	INPUT (1) (OPTION)	1581421
24	OUTPUT (1) (OPTION)	1581424
25	do. (2) (OPTION)	1581425
31 1/2	WARNING LIGHT & AUTO POWER OFF (OPTION)	1681431 1/2
31 1/2	MULTIPLE LIGHT TOWER & CYCLE START LIGHT (OPTION)	1681431 2/2

DRAWING NO. 4243081400 A
SHEET 1 OF 3

INDEX NUMBER
SHEET LINE

DRAWING NO CHANGE
OCT. 6. '86 Y.N

APPROVED
DESIGNED K. Ohira
DRAWN

Mazak
YAMAZAKI MAZAK CORPORATION

TITLE VQC15/40
ELECTRICAL CONTROL
SCHEMATIC DIAGRAM

CONTROL MA24TRGL
DRAWING NO. 4243081400 A
SHEET 1 OF 3
SIZE 3

SHEET LINE
INDEX NUMBER

ELEMENTARY DIAGRAM LIST

SHEET	TITLE	DRAWING NO.
41	MMS INTERFACE DIAGRAM	4240481441
50	CHILLER UNIT	4240481450 1/3 ~ 3/3
53	NC TABLE (OPTION) TSUDAKOMA	3081453A 1/2 2/2
54	do. (OPTION) M & M	3081454
55	INDEX TABLE (OPTION) M FUNCTION	1681455
56	ERICKSON INDEXER (OPTION)	0481456
57	NIKKEN DIGI ROTARY TABLE (INDEX TABLE)	457
70	MOTION SWITCH INPUT 2PC	1681470 1/2 2/2
71	PALLET CHENGER INPUT 2PC	471
72	OPERATING PANEL INDICATER 2PC	472

DRAWING NO. 4243081400 A
SHEET 2 OF 3

INDEX NUMBER
SHEET LINE
APPROVED
DESIGNED
DRAWN
Mazak
MAZAK MAZAK CORPORATION
TITLE VQC/S/40 ELECTRICAL CONTROL SCHEMATIC DIAGRAM
CONTROL MAZATROL
DRAWING NO. 4243081400 A
SHEET 2 OF 3
SIZE 3
SHEET LINE
INDEX NUMBER

ELEMENTARY DIAGRAM LIST

SHEET	TITLE	DRAWING NO.
80	OIL AIR UNIT (FOR 10,000 r.p.m.) (OPTION)	4243081480
81	AIR / FLOOD LARGE CAPACITY COOLANT SYSTEM	1681481
85	HANDY PULSE GENERATOR BOX (OPTION)	1681485 1/2, 2/2
90	DNC CONNECTION (OPTION)	1681490 1/3 ~ 3/3
91	AUTO POWER ON/OFF CONTROL (OPTION) CPU LINK	491
92	AUTO POWER ON/OFF (B) (OPTION) CALENDER TIMER	492

DRAWING NO. 4243081400
SHEET 3 OF 4

INDEX NUMBER
SHEET LINE

APPROVED
DESIGNED K. Ohira
DRAWN

Mazak
YAMAZAKI MAZAK CORPORATION

TITLE VQC/S/40 ELECTRICAL CONTROL SCHEMATIC DIAGRAM

CONTROL MAZATROL
DRAWING NO. 4243081400
SHEET 3 OF 4
SIZE 3

SHEET LINE
INDEX NUMBER

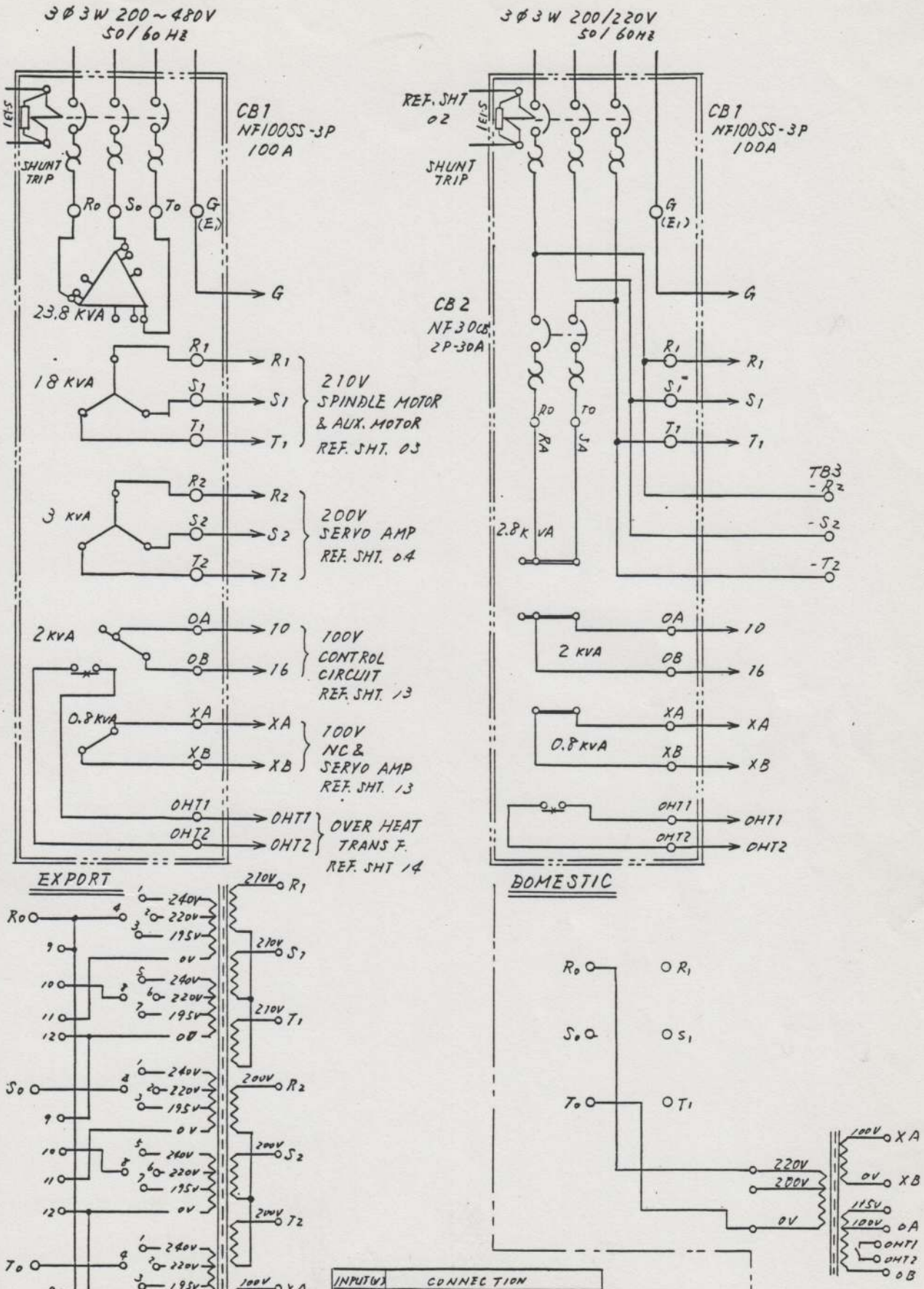

INPUT(V)	CONNECTION			
200 V	3-4	7-8	9-10	11-12
220	2-4	6-8	9-10	11-12
230	1-4	5-8	9-10	11-12
240	1-4	5-8	9-10	11-12
380	3-4	7-8	10-11	
415	3-4	6-8	10-11	
440	2-4	6-8	10-11	
440	3-4	5-8	10-11	
480	1-4	5-8	10-11	

DRAWING NO. 4243081401
SHEET ___ OF ___

INDEX NUMBER
SHEET LINE
APPROVED
DESIGNED
DRAWN
Mazak
YAMAZAKI MAZAK CORPORATION
TITLE VQC15/40 LINE POWER SUPPLY
CONTROL YAZAKI
DRAWING NO. 4243081401
SHEET 1 OF 2
SIZE 3
SHEET LINE
INDEX NUMBER

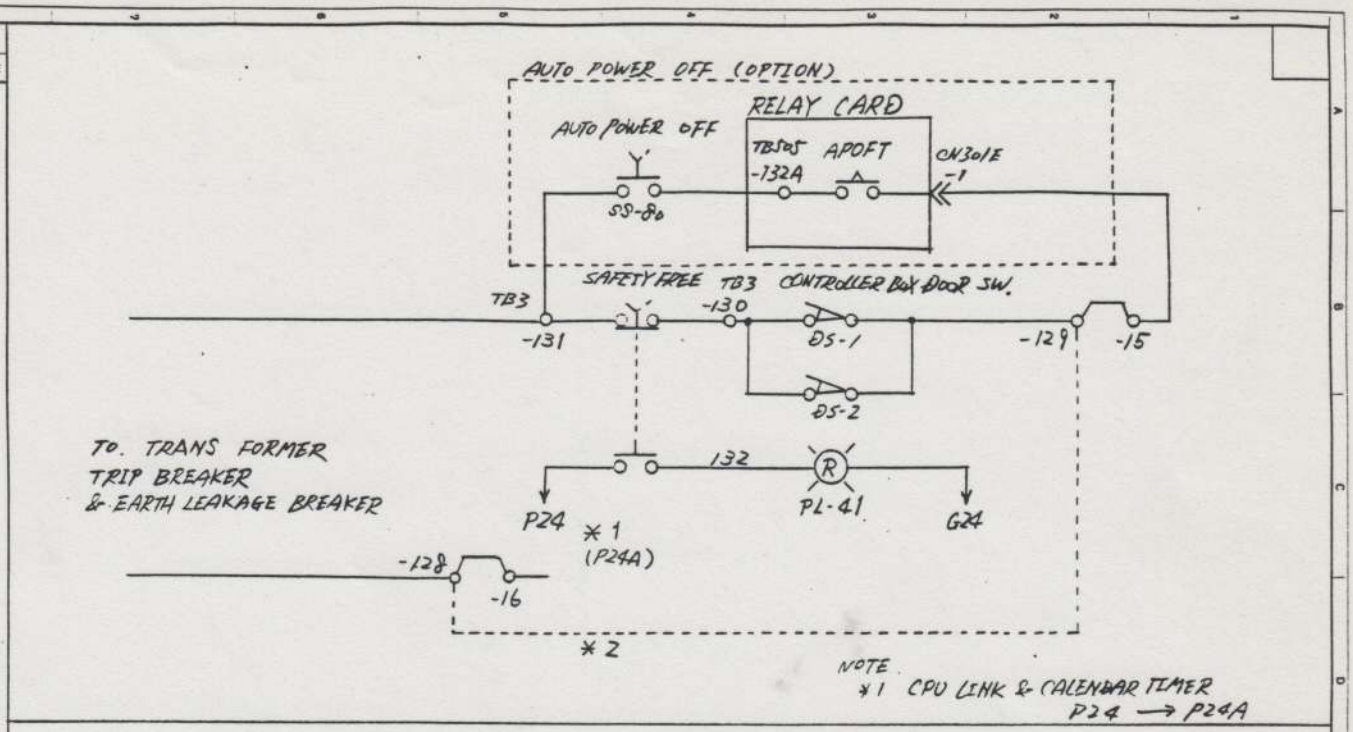

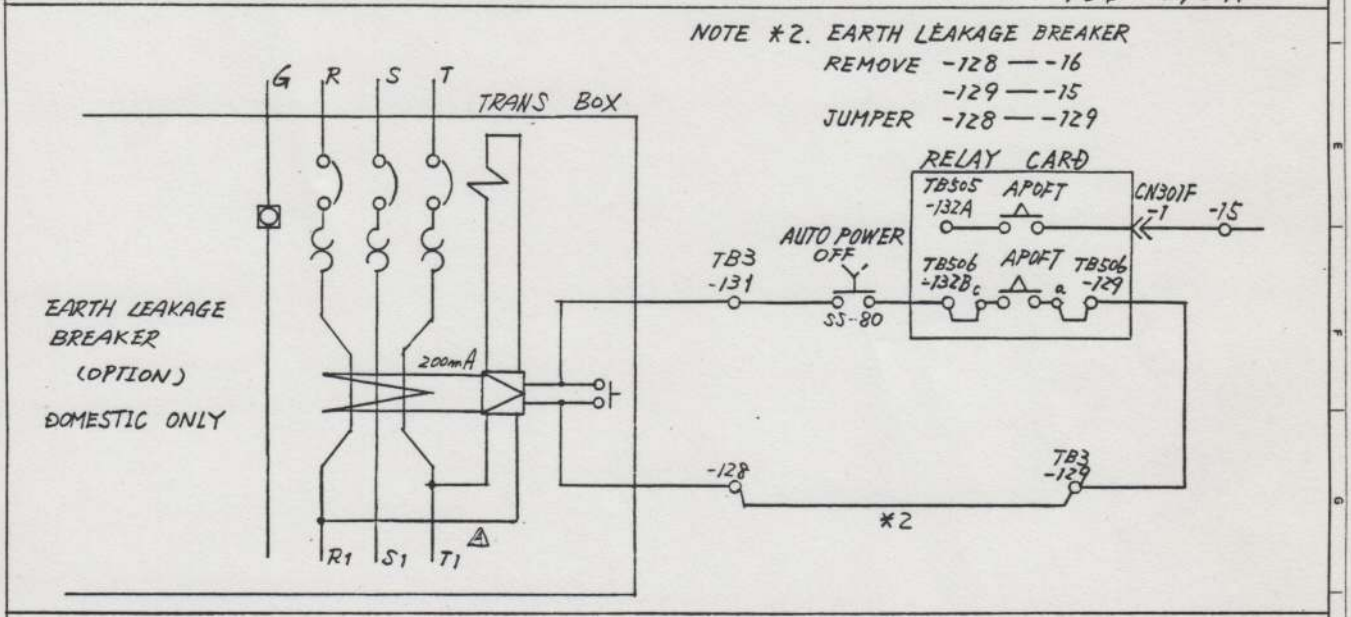

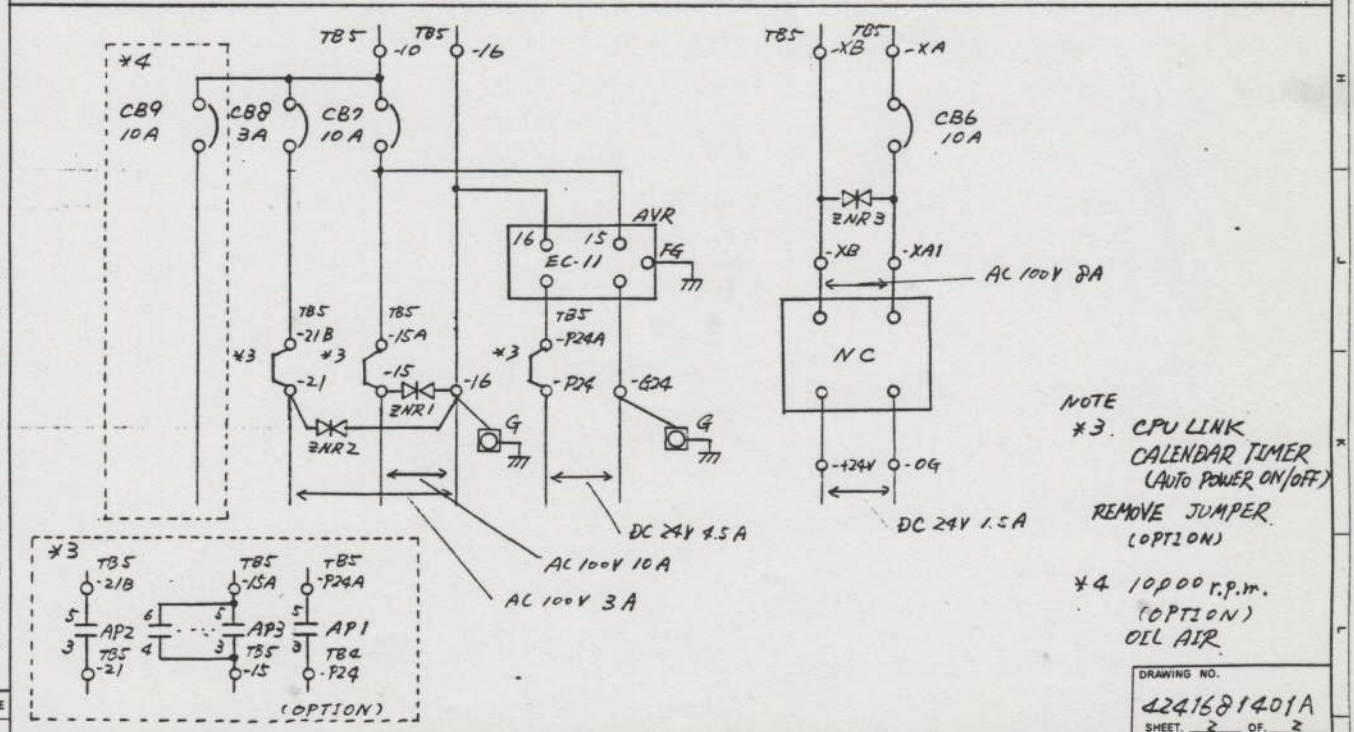

INDEX NUMBER

SHEET | LINE

TERMINAL No. So To → R. S. T. NOV. 10 '86 MIKA

DRN. BY V. Okada DATE Dec. 16 '85
CHK'D BY ____ DATE ____

Mazak
YAMAZAKI MAZAK CORPORATION

TITLE: VQC-15/40 LINE POWER SUPPLY

CONTROL: M2V
DRAWING NO. 4241681401A
SHEET 2 OF 2
SIZE 3

SHEET | LINE
INDEX NUMBER

DRAWING NO. 4241681401A
SHEET 2 OF 2

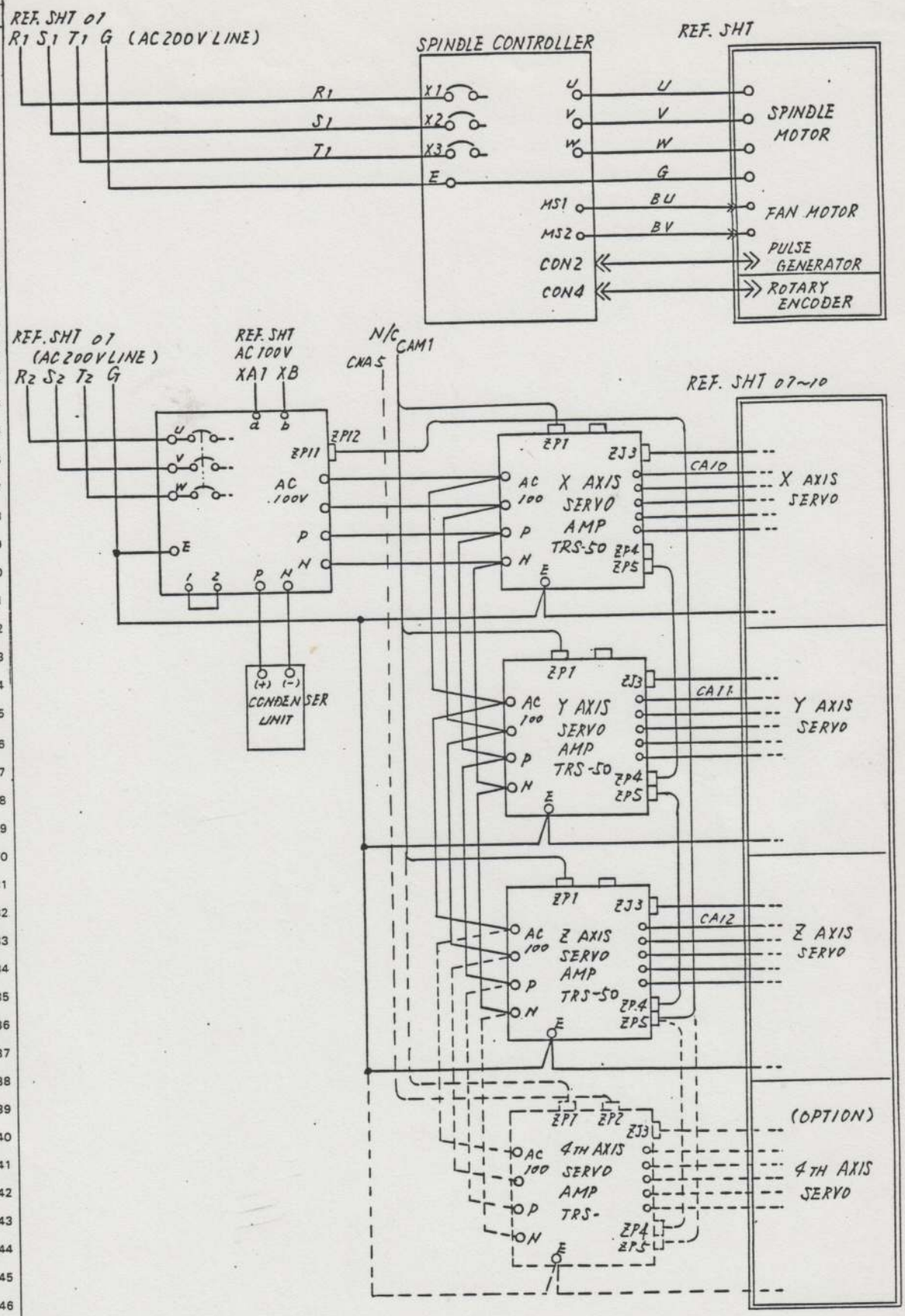

INDEX NUMBER

SHEET	LINE

APPROVED

DESIGNED

DRAWN

Mazak
YAMAZAKI MAZAK CORPORATION

TITLE
VQC/15/40
LINE POWER SUPPLY.
(2)

CONTROL
MAZATROL

DRAWING NO.
4243081402

SHEET 1 OF 2

SIZE
3

DRAWING NO.
4243081402
SHEET 1 OF 2

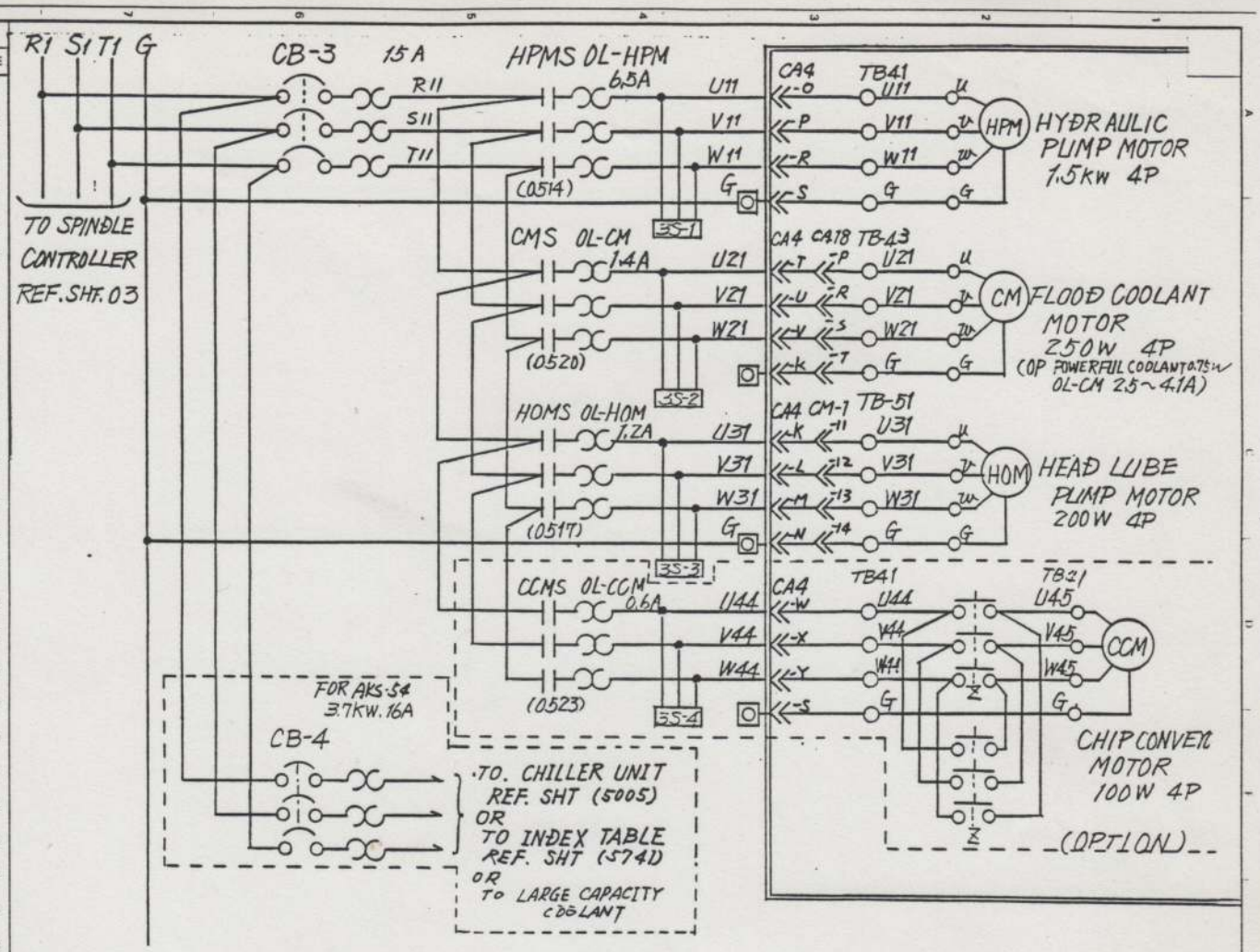

INDEX NUMBER

SHEET | LINE

APPROVED: M. M.

DESIGNED: K. Ikima

DRAWN:

Mazak
YAMAZAKI MAZAK CORPORATION

TITLE: VQC/S/40
LINE POWER SUPPLY

CONTROL: MAZATROL

DRAWING NO. 4243081402

SHEET 2 OF 2

SIZE 3

DRAWING NO. 4243081402

SHEET 2 OF 2

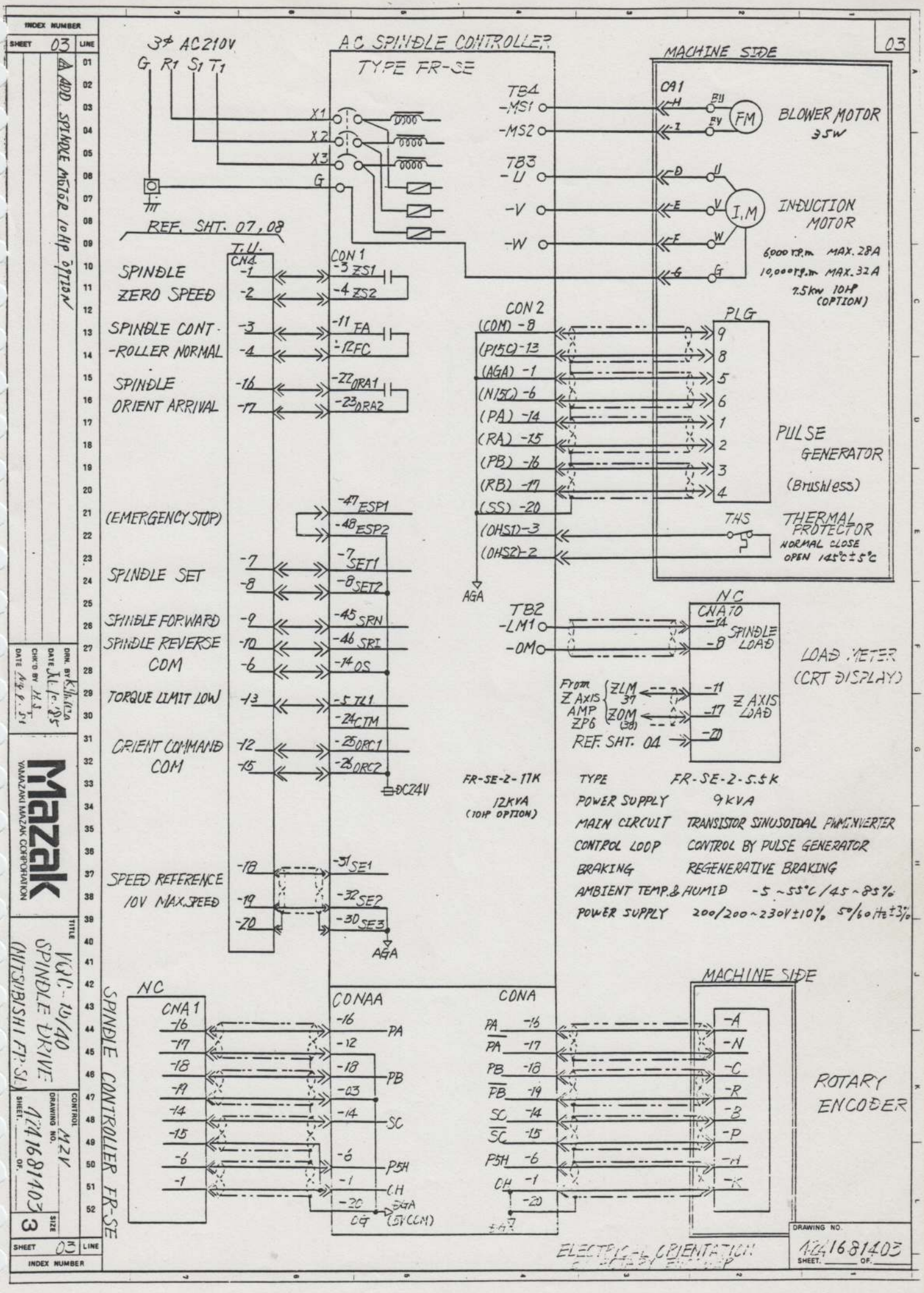
03
3φ AC210V
G R1 S1 T1
A.C SPINDLE CONTROLLER
TYPE FR-SE
MACHINE SIDE
TB4
-MS1
-MS2
CA1
BLOWER MOTOR
35W
TB3
-U
-V
-W
INDUCTION MOTOR
6,000 r.p.m MAX. 28A
10,000 r.p.m MAX. 32A
7.5kw 10HP (OPTION)
REF. SHT. 07,08
T.U.
CN4
CON1
SPINDLE ZERO SPEED
SPINDLE CONT-ROLLER NORMAL
SPINDLE ORIENT ARRIVAL
CON2
PLG
PULSE GENERATOR
(Brushless)
(EMERGENCY STOP)
THS
THERMAL PROTECTOR
NORMAL CLOSE
OPEN 145°C±5°C
SPINDLE SET
SPINDLE FORWARD
SPINDLE REVERSE
COM
TORQUE LIMIT LOW
ORIENT COMMAND COM
SPEED REFERENCE 10V MAX.SPEED
AGA
TB2
-LM1
-OM
NC
CNA70
SPINDLE LOAD
LOAD METER (CRT DISPLAY)
From Z AXIS AMP ZP6
Z AXIS LOAD
REF. SHT. 04
FR-SE-2-17K
12KVA
(10HP OPTION)
TYPE FR-SE-2-5.5K
POWER SUPPLY 9KVA
MAIN CIRCUIT TRANSISTOR SINUSOIDAL PWM INVERTER
CONTROL LOOP CONTROL BY PULSE GENERATOR
BRAKING REGENERATIVE BRAKING
AMBIENT TEMP.& HUMID -5~55°C/45~85%
POWER SUPPLY 200/200~230V±10% 50/60Hz±3%
SPINDLE CONTROLLER FR-SE
NC
CNA1
CONAA
CONA
MACHINE SIDE
ROTARY ENCODER
ELECTRICAL ORIENTATION
DRAWING NO. 4241681403
SHEET OF
INDEX NUMBER
SHEET 03
LINE
Mazak
YAMAZAKI MAZAK CORPORATION
TITLE VQC-15/40 SPINDLE DRIVE (MITSUBISHI FR-SE)
CONTROL MZV
DRAWING NO. 4241681403
SIZE 3
DRN. BY K.Kikuchi DATE 1.Jul.95
CHK'D BY H.S.T. DATE Aug.8.95
4ADD SPINDLE MOTOR 10HP OPTION

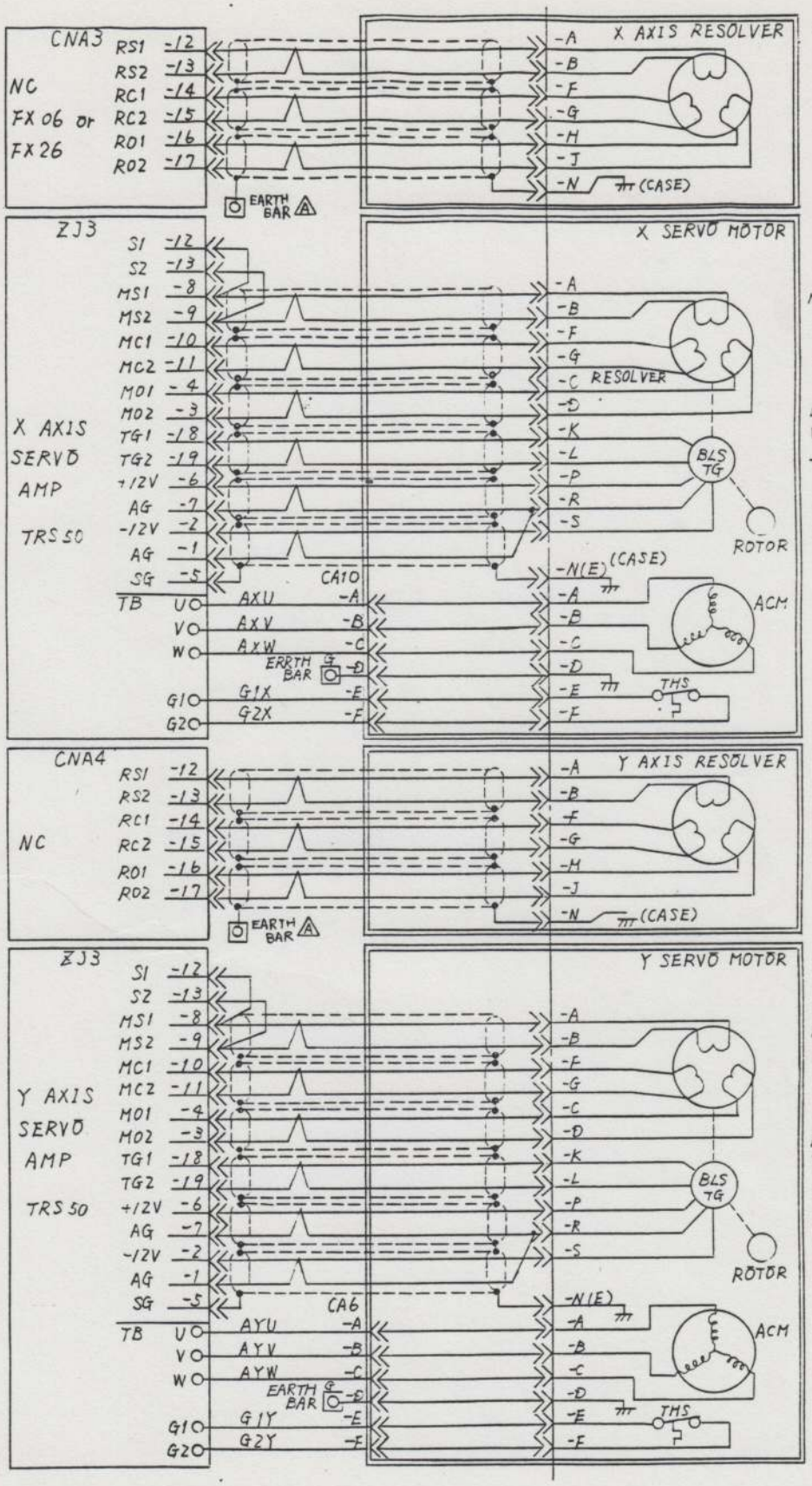

X AXIS

RESOLVER RT-4X

SERVO MOTOR HA-83C-S

DETECTER ATT

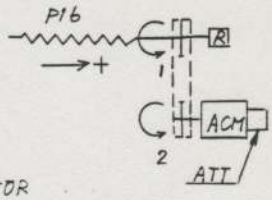

MOTOR

CURRENT IR=4.9A

(3000rpm CONSTANT)

MAXIMUM IP=44A

BLS. TACHOGENERATER

VTG=2V±10%/1000rpm

Tr. AMP TRS50

OUT VOLTAGE 155V/2000rpm

OUT CURRENT 10Arms

(MAX 30Arms)

Y AXIS

RESOLVER RT-4X

SERVO MOTOR HR-83C-S

DETECTER ATT

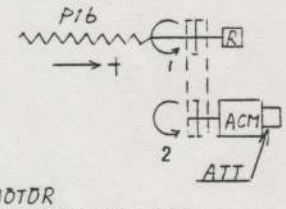

MOTOR

CURRENT IR=4.9A

(3000rpm CONSTANT)

MAXIMUM IP=44A

BLS. TACHOGENERATER

VTG=2V±10%/1000rpm

Tr. AMP TRS50

OUT VOLTAGE 155V/2000rpm

OUT CURRENT 10Arms

(MAX 30Arms)

INDEX NUMBER

SHEET | LINE

A CNA3,4 PIN No. 20 NETWORK (TO EARTH BAR) Rev. 4.'86 Y.N

APPROVED M. Ito

DESIGNED K. Kawa

DRAWN 4/12'86 OMEGA

Mazak

YAMAZAKI MAZAK CORPORATION

TITLE SERVO MOTOR & RESOLVER CONNECTION

CONTROL MAZATROL

DRAWING NO. 4243081404A

SHEET 1 OF 4

SIZE 3

SHEET | LINE

INDEX NUMBER

DRAWING NO 4243081404A

SHEET 1 OF 4

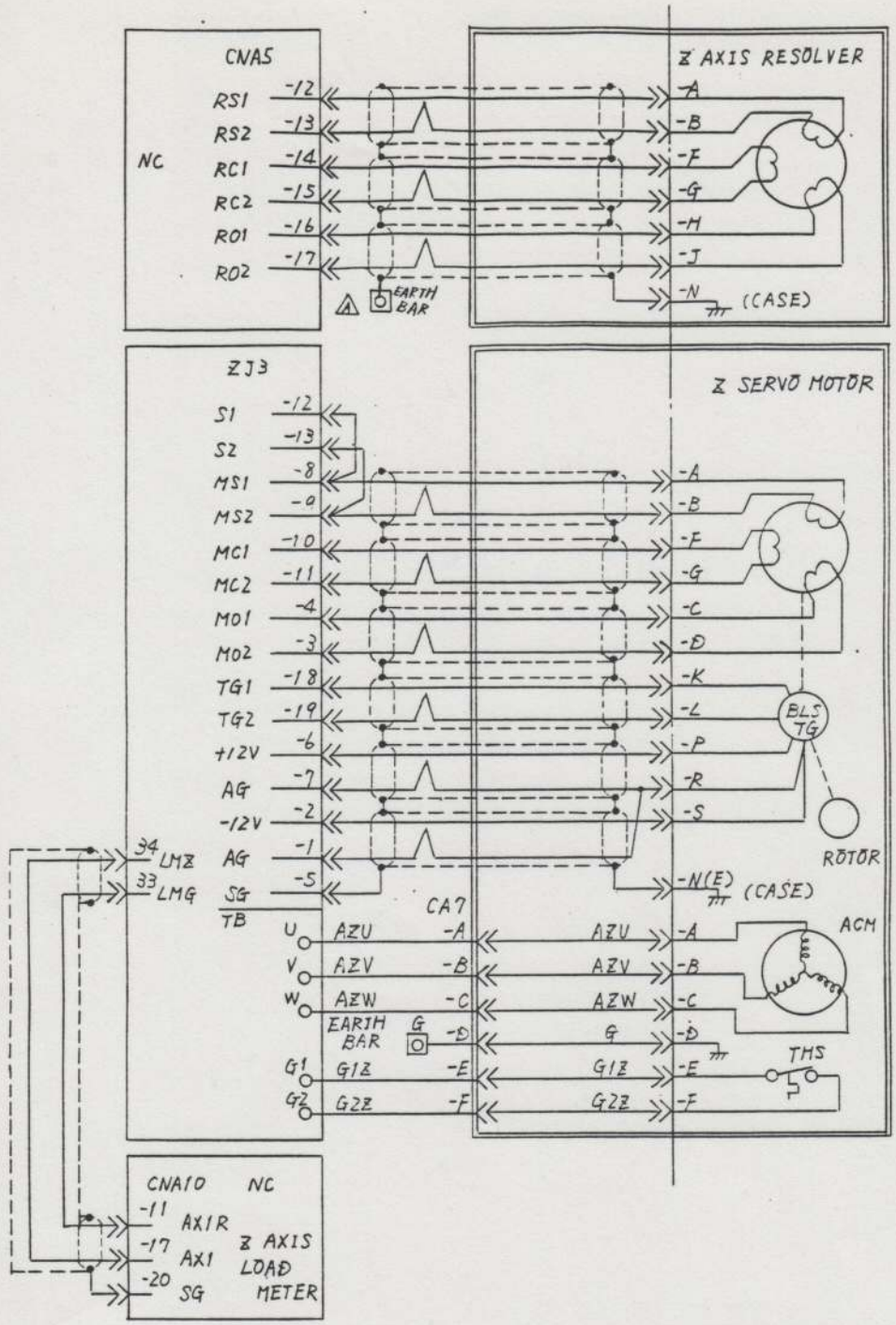

Z AXIS
RESOLVER RT-5X
SERVO MOTER HA-83C-S
DETECTER ATT

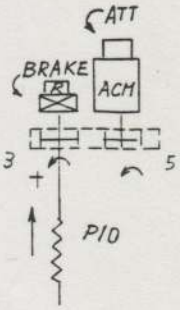

MOTOR
CURRENT IR = 4.9A
(3000 rpm CONSTANT)
MAXIMUM IP = 44A
BLS TACHO GENERATER
VTG = 2V ±10% /1000 rpm
TH AMP TRS 50
OUT VOLTAGE 155V /2000 rpm
OUT CURRENT 10A rms
(MAX 30A rms)

INDEX NUMBER
SHEET LINE
CNA5 PIN No. 20 NOTHING (TO EARTH BAR) OCT. 4, '86 Y.N.

APPROVED
DESIGNED
DRAWN 4/12 '86 OMEGA

Mazak
YAMAZAKI MAZAK CORPORATION

TITLE
VQC15/40
SERVO MOTOR &
RESOLVER CONNECTION

CONTROL MAZATROL
DRAWING NO. 4243081404A
SHEET 2 OF 4
SIZE 3

SHEET LINE
INDEX NUMBER

DRAWING NO.
4243081404A
SHEET 2 OF 4

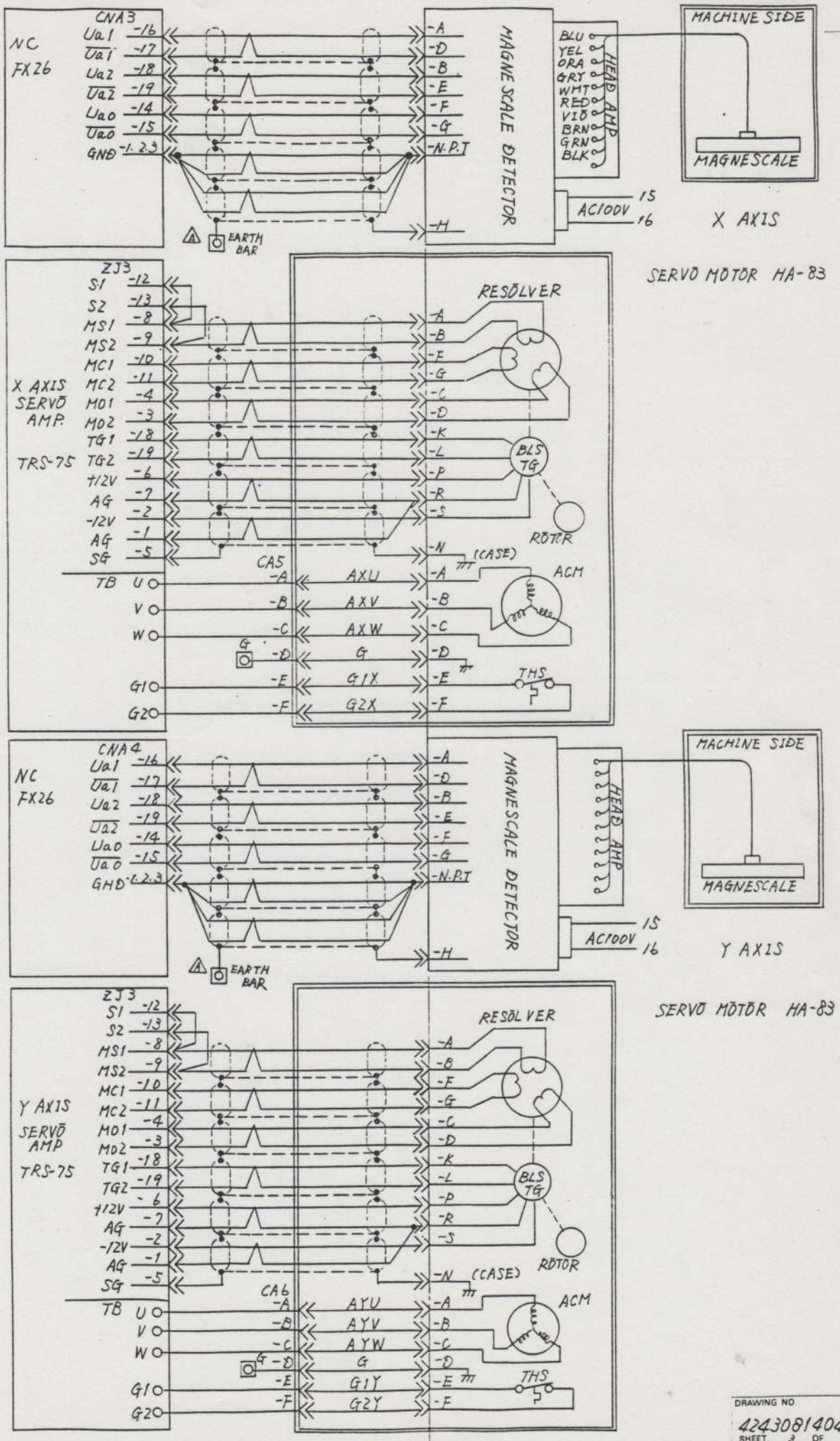

INDEX NUMBER		
SHEET	LINE	
1	01	CN43,4 PIN No. 20 NOTIFING (IE FARTH PAR) OCT 4 '84 Y.H
	02	
	03	
	04	
	05	
	06	
	07	
	08	
	09	
	10	
	11	
	12	
	13	
	14	
	15	
	16	
	17	
	18	
	19	
	20	
	21	
	22	APPROVED: M. M.
	23	
	24	
	25	DESIGNED: K. Hirai
	26	
	27	
	28	DRAWN: 4/12 '86 OMEGA
	29	
	30	
	31	Mazak YAMAZAKI MAZAK CORPORATION
	32	
	33	
	34	
	35	
	36	
	37	TITLE: VQC 15/40 SERVO & MAGNESCALE CONNECTION
	38	
	39	
	40	
	41	
	42	
	43	
	44	
	45	
	46	
	47	CONTROL: MAZATROL DRAWING NO. 4243081404A SHEET 3 OF 4
	48	
	49	
	50	
	51	
	52	SIZE 3
SHEET	LINE	
INDEX NUMBER		

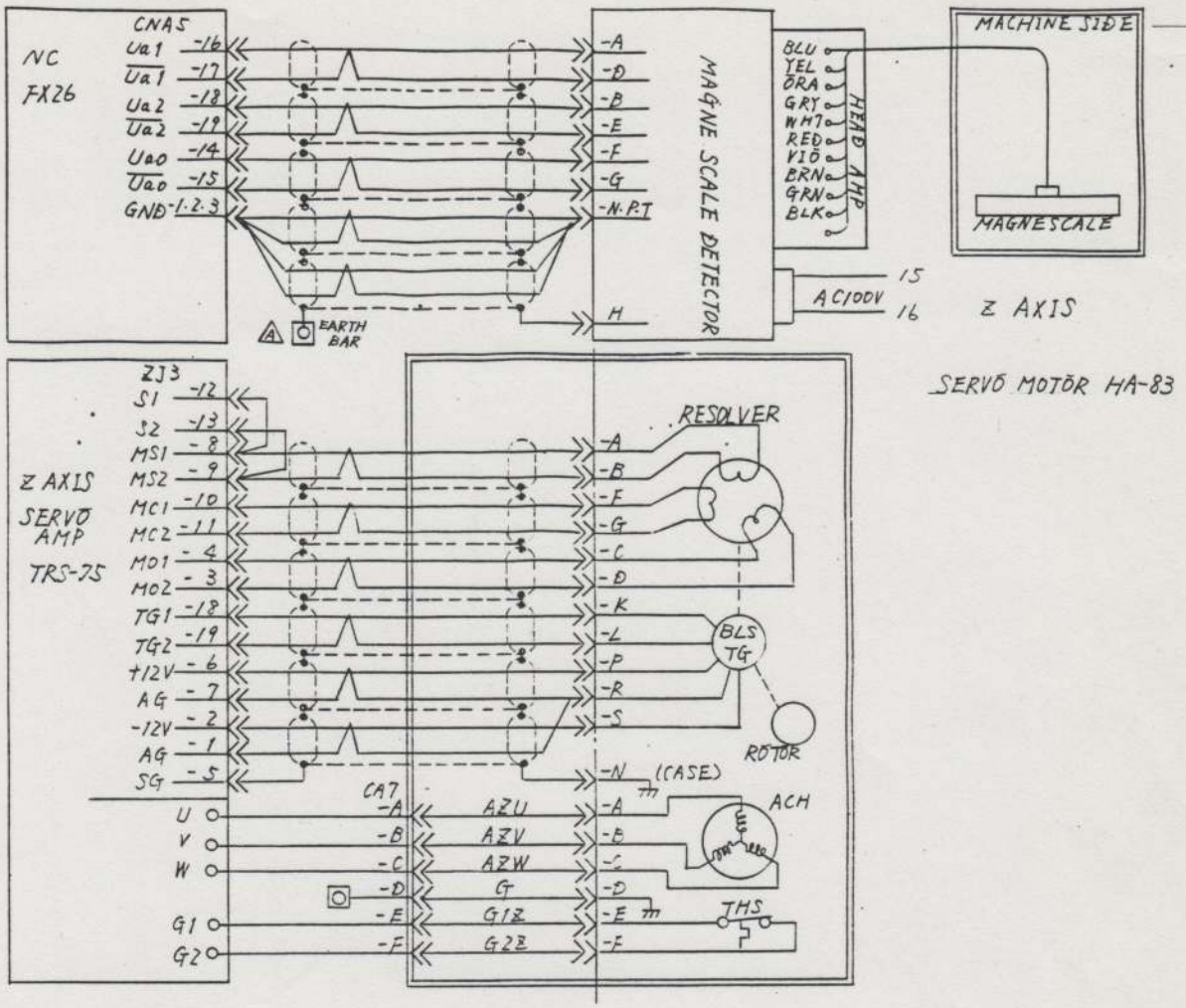

INDEX NUMBER	
SHEET	LINE
CNA5 PIN No. 20 NOTHING (To EARTH BAR)	
OCT. 1. '86 Y.H	
APPROVED	M. M.
DESIGNED	K. Yazawa
DRAWN	4/9 '86 OMEGA
Mazak YAMAZAKI MAZAK CORPORATION	
TITLE	VQC-15/40 SERVO & MAGNESCALE CONNECTION
CONTROL	MAZATROL
DRAWING NO.	4243081404A
SHEET 4 OF 4	
SIZE	3
SHEET	LINE
INDEX NUMBER	

DRAWING NO.
4243081404A
SHEET 4 OF 4

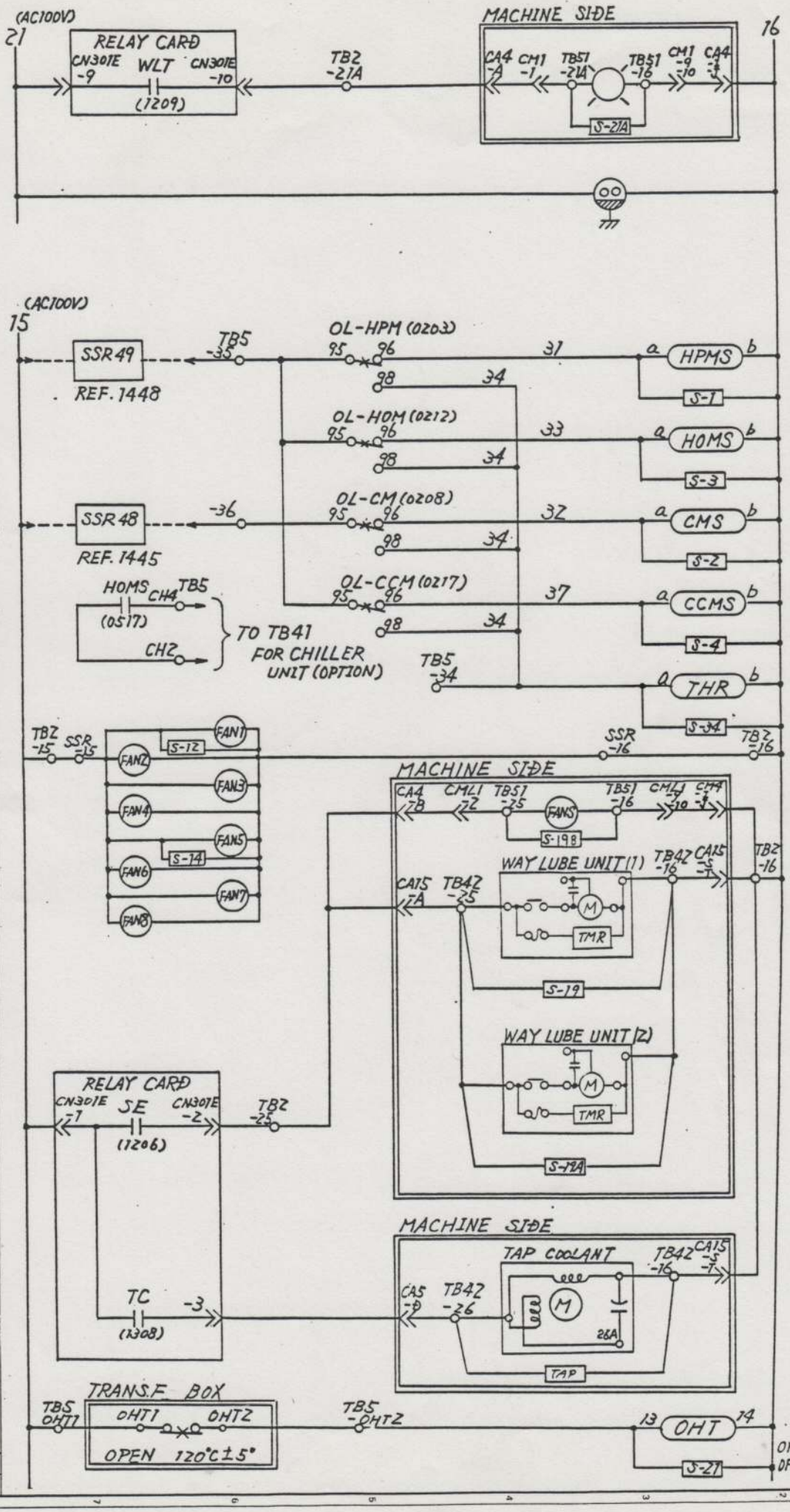
(AC100V)
21
RELAY CARD
CN301E -9
WLT
CN301E -10
(1209)
TB2 -21A
MACHINE SIDE
CA4 -9
CM1 -1
TB51 -21A
TB51 -16
CM1 -9 -10
CA4 -8
S-21A
16
WORK LIGHT
AC. OUTLET 100V 3A
(AC100V)
15
SSR49
REF. 1448
TB5 -35
OL-HPM (0203)
95 96 98
31
34
HPMS
S-1
HYDRAULIC PUMP MOTOR STARTER 0201 0202 0203 09
OL-HOM (0212)
33
HOMS
S-3
HEAD OIL PUMP MOTOR STARTER 0211 0212 0213 05
SSR48
REF. 1445
-36
OL-CM (0208)
32
CMS
S-2
FLOOD COOLANT PUMP MOTOR START 0206 0207 0208
HOMS CH4 TB5
(0517)
CH2
TO TB41 FOR CHILLER UNIT (OPTION)
OL-CCM (0217)
37
CCMS
S-4
CHIP CONVEYOR MOTOR START 0216 0217 0218
TB5 -34
THR
S-34
MOTOR THERMAL TRIP 0721
TB2 -15
SSR -15
FAN1
FAN2
FAN3
FAN4
FAN5
FAN6
FAN7
FAN8
S-12
S-14
SSR -16
TB2 -16
CABINET COOLING FAN 1 ~ 8
HEAD LUBE FAN COOLER
MACHINE SIDE
CA4 -8
CM1 -2
TB51 -25
FAN5
S-19B
TB51 -16
CM1 -9 -10
CA4 -8
WAY LUBE UNIT (1)
CA15 -7A
TB42 -25
TB42 -16
CA15 -5 -7
TB2 -16
M
TMR
S-19
AUTO LUBE UNIT (1)
MOTOR
50HZ 100V 0.7A 1250 r.p.m.
60HZ 100V 0.7A 1550 r.p.m.
WAY LUBE UNIT (2)
S-19A
AUT LUBE UNIT (2) (OPTION)
do.
RELAY CARD
CN301E -7
SE
CN301E -2
(1206)
TB2 -25
TC
-3
(1308)
MACHINE SIDE
TAP COOLANT
CA5 -9
TB42 -26
TB42 -16
CA15 -5 -7
M
26A
TAP
TAP COOLANT PUMP MOTOR (OPTION)
TRANS.F. BOX
TB5 OHT1
OHT1
OHT2
OPEN 120°C±5°
TB5 -OHT2
13
OHT
14
S-27
MAIN TRANSFORMER OVER HEAT 0227
ON: NORMAL
OFF: OVER HEAT
DRAWING NO. 4243081405
SHEET ___ OF ___
INDEX NUMBER
SHEET
LINE
APPROVED
DESIGNED
DRAWN
Mazak
YAMAZAKI MAZAK CORPORATION
TITLE
VQC/S/40
MOTOR CONTROL
CONTROL
MAZATROL
DRAWING NO.
4243081405
SHEET
OF
3
SIZE

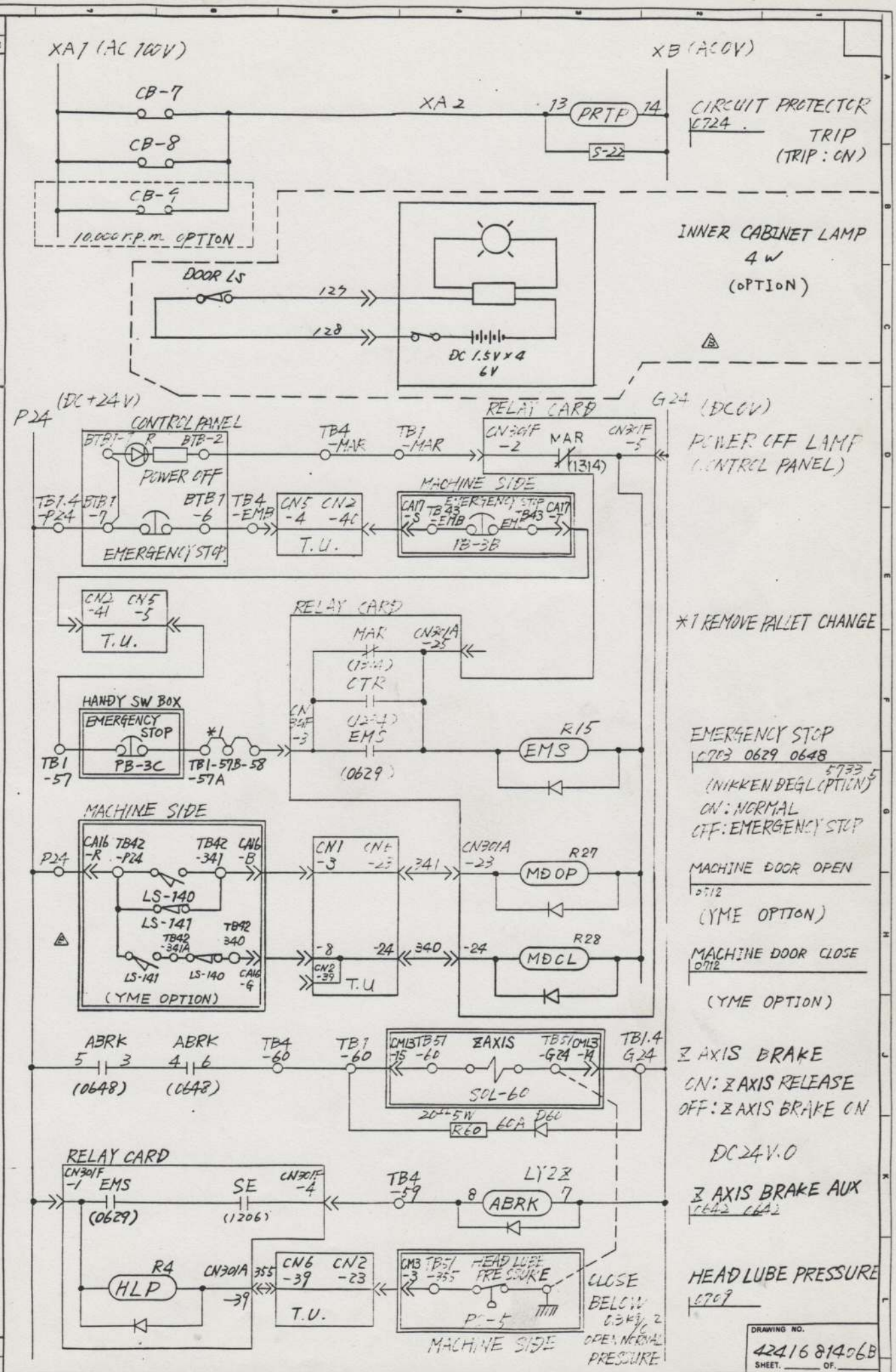

INDEX NUMBER

SHEET 06 LINE

INNER DOOR LAMP OPTION Nov.14'86 YN

DETELE DOOR INTERLOCK LS, ADD DOOR OPEN AND CLOSE LS. Oct.31'86 MH

DRN. BY KM DATE Jul.10.'85

CHK'D BY DATE Aug.8.'85

Mazak YAMAZAKI MAZAK CORPORATION

TITLE VQC-15/40 POWER CONTROL CIRCUIT

CONTROL M2V

DRAWING NO. 424168140 6B

SIZE 3

SHEET 06 LINE

INDEX NUMBER

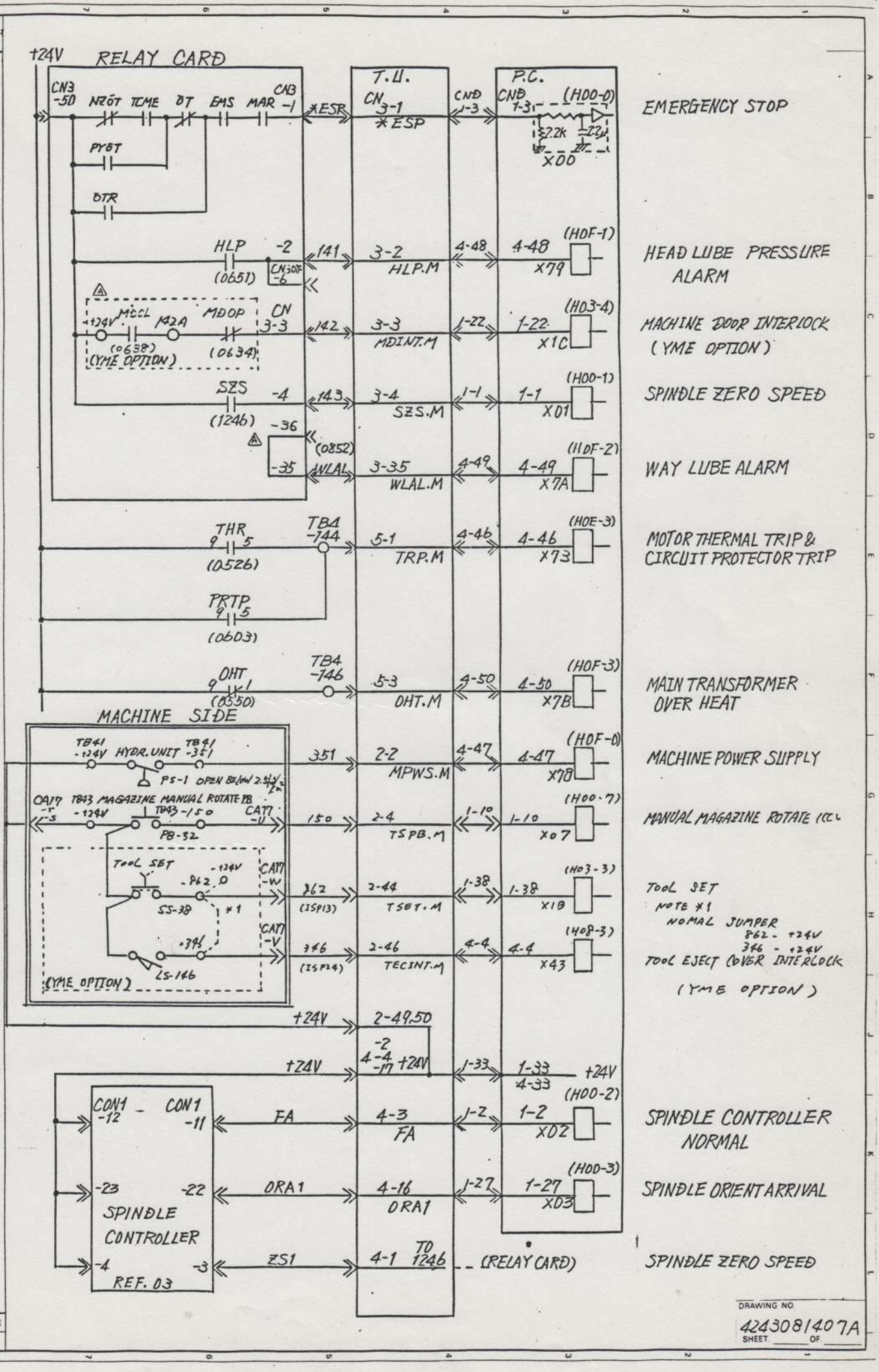
RELAY CARD
+24V
CN3 -50
NZOT
TCME
OT
EMS
MAR
CN3 -1
*ESP
T.U.
CN 3-1
*ESP
CND -3
P.C.
CND 1-3
(H00-0)
2.2k
22μ
X00
EMERGENCY STOP
PYOT
OTR
HLP
-2
(0651)
CN30F -6
141
3-2
HLP.M
4-48
4-48
(H0F-1)
X79
HEAD LUBE PRESSURE ALARM
MCCL
M42A
MDOP
CN 3-3
(0638)
(YME OPTION)
(0634)
142
3-3
MDINT.M
1-22
1-22
(H03-4)
X1C
MACHINE DOOR INTERLOCK (YME OPTION)
SZS
-4
(1246)
143
3-4
SZS.M
1-1
1-1
(H00-1)
X01
SPINDLE ZERO SPEED
-36
(0852)
-35
WLAL
3-35
WLAL.M
4-49
4-49
(H0F-2)
X7A
WAY LUBE ALARM
THR
9 5
(0526)
TB4 -144
5-1
TRP.M
4-46
4-46
(H0E-3)
X73
MOTOR THERMAL TRIP & CIRCUIT PROTECTOR TRIP
PRTP
9 5
(0603)
OHT
9 1
(0550)
TB4 -146
5-3
OHT.M
4-50
4-50
(H0F-3)
X7B
MAIN TRANSFORMER OVER HEAT
MACHINE SIDE
TB41 -+24V
HYDR.UNIT
TB41 -351
PS-1 OPEN BELOW 2.5kg/cm²
351
2-2
MPWS.M
4-47
4-47
(H0F-0)
X78
MACHINE POWER SUPPLY
CA17 -5
TB43 MAGAZINE MANUAL ROTATE PB
-+24V
TB43 -150
CA17 -11
PB-32
150
2-4
TSPB.M
1-10
1-10
(H00-7)
X07
MANUAL MAGAZINE ROTATE (CCW)
TOOL SET
-+24V
-862
SS-38
*1
CA17 -W
862
(ISP13)
2-44
TSET.M
1-38
1-38
(H03-3)
X1B
TOOL SET
NOTE *1
NOMAL JUMPER
862 - +24V
346 - +24V
-346
LS-146
CA17 -V
346
(ISP24)
2-46
TECINT.M
4-4
4-4
(H08-3)
X43
TOOL EJECT COVER INTERLOCK
(YME OPTION)
(YME OPTION)
+24V
2-49,50
+24V
2-2
4-4 -17
+24V
1-33
1-33
4-33
+24V
CON1 -12
CON1 -11
FA
4-3
FA
1-2
1-2
(H00-2)
X02
SPINDLE CONTROLLER NORMAL
-23
-22
ORA1
4-16
ORA1
1-27
1-27
(H00-3)
X03
SPINDLE ORIENT ARRIVAL
SPINDLE CONTROLLER
-4
-3
ZS1
4-1
TO 1246
(RELAY CARD)
SPINDLE ZERO SPEED
REF. 03
INDEX NUMBER
SHEET
LINE
DELETE WAYLUBE WARNING TIMER, ADD MCCL, MDOP RELAY
APPROVED
DESIGNED
DRAWN
Mazak
YAMAZAKI MAZAK CORPORATION
TITLE
V80/S/40
MOTION SWITCH INPUT (1)
CONTROL
MAZATROL
DRAWING NO.
4243081407A
SHEET
OF
SIZE
3
DRAWING NO.
4243081407A
SHEET
OF

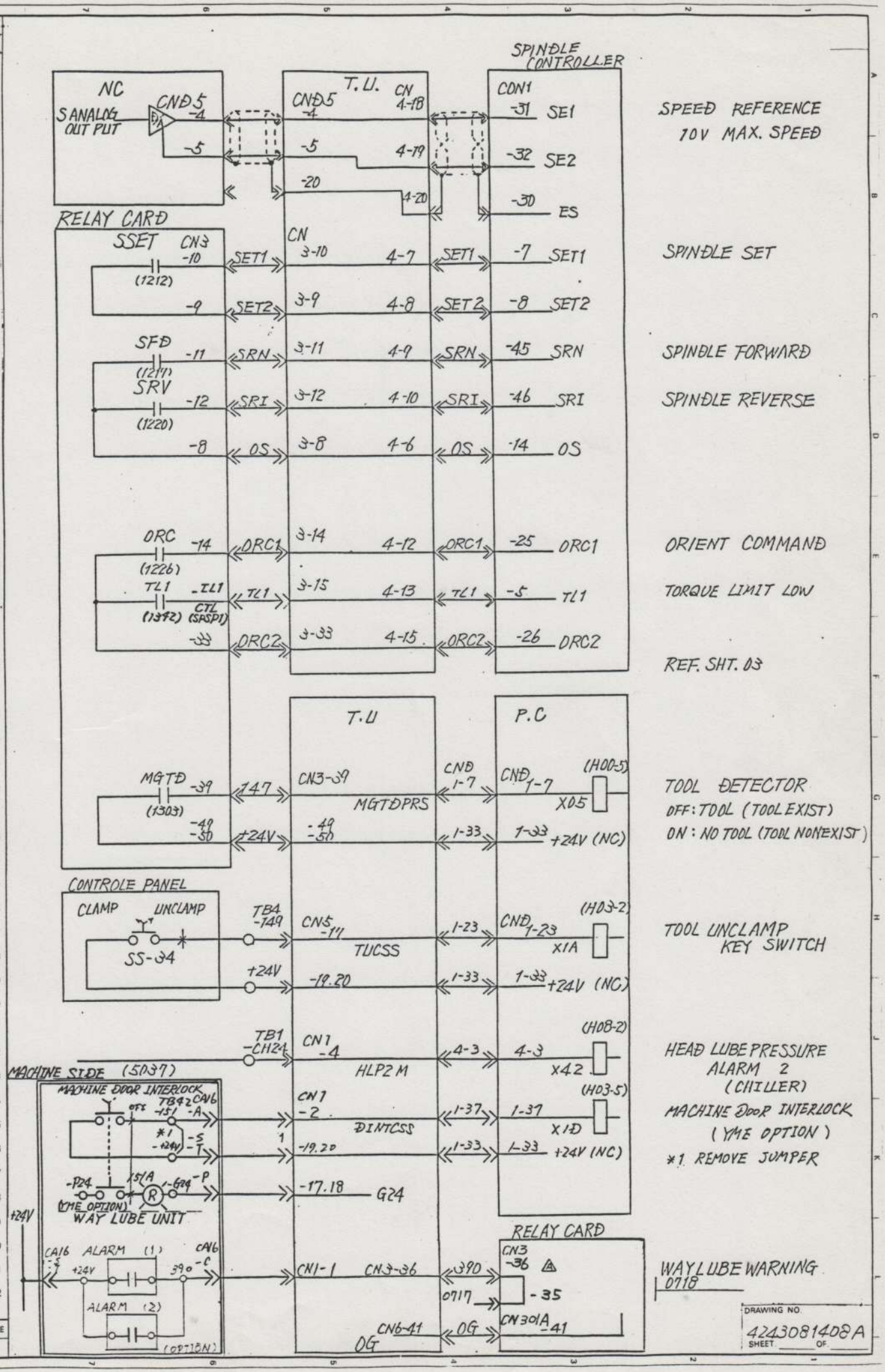
INDEX NUMBER
SHEET
LINE
DELETE THE WAYLUBE WARNING TIMER
APPROVED
DESIGNED
DRAWN
Mazak
YAMAZAKI MAZAK CORPORATION
TITLE
VQC/S/40
MOTION SWITCH INPUT (2)
CONTROL
MAZATROL
DRAWING NO.
4243081408A
SHEET
SIZE
3
NC
SANALOG OUT PUT
CND5
T.U.
CN 4-18
SPINDLE CONTROLLER
CON1
SPEED REFERENCE
10V MAX. SPEED
SE1
SE2
ES
RELAY CARD
SSET
CN3
(1212)
SET1
SET2
SPINDLE SET
SFD
(1211)
SRN
SPINDLE FORWARD
SRV
(1220)
SRI
SPINDLE REVERSE
OS
ORC
(1226)
ORC1
ORIENT COMMAND
TL1
(1342)
CTL (SASP1)
TORQUE LIMIT LOW
ORC2
REF. SHT. 03
T.U
P.C
MGTD
(1303)
CN3-39
MGTDPRS
CND 1-7
(H00-5)
X05
TOOL DETECTOR
OFF: TOOL (TOOL EXIST)
ON: NO TOOL (TOOL NONEXIST)
+24V (NC)
CONTROLE PANEL
CLAMP
UNCLAMP
SS-34
TB4 -149
CN5 -11
TUCSS
(H03-2)
X1A
TOOL UNCLAMP KEY SWITCH
TB1 -CH24
CN1 -4
HLP2M
(H08-2)
X42
HEAD LUBE PRESSURE ALARM 2 (CHILLER)
MACHINE SIDE (5037)
MACHINE DOOR INTERLOCK
TB42 CA16
CN1 -2
DINTCSS
(H03-5)
X1D
MACHINE DOOR INTERLOCK (YME OPTION)
*1 REMOVE JUMPER
G24
(YME OPTION)
WAY LUBE UNIT
ALARM (1)
ALARM (2)
(OPTION)
CN1-1
CN3-36
RELAY CARD
CN3 -36
-35
CN301A -41
CN6-41
OG
WAYLUBE WARNING
0718
DRAWING NO.
4243081408A
SHEET
OF

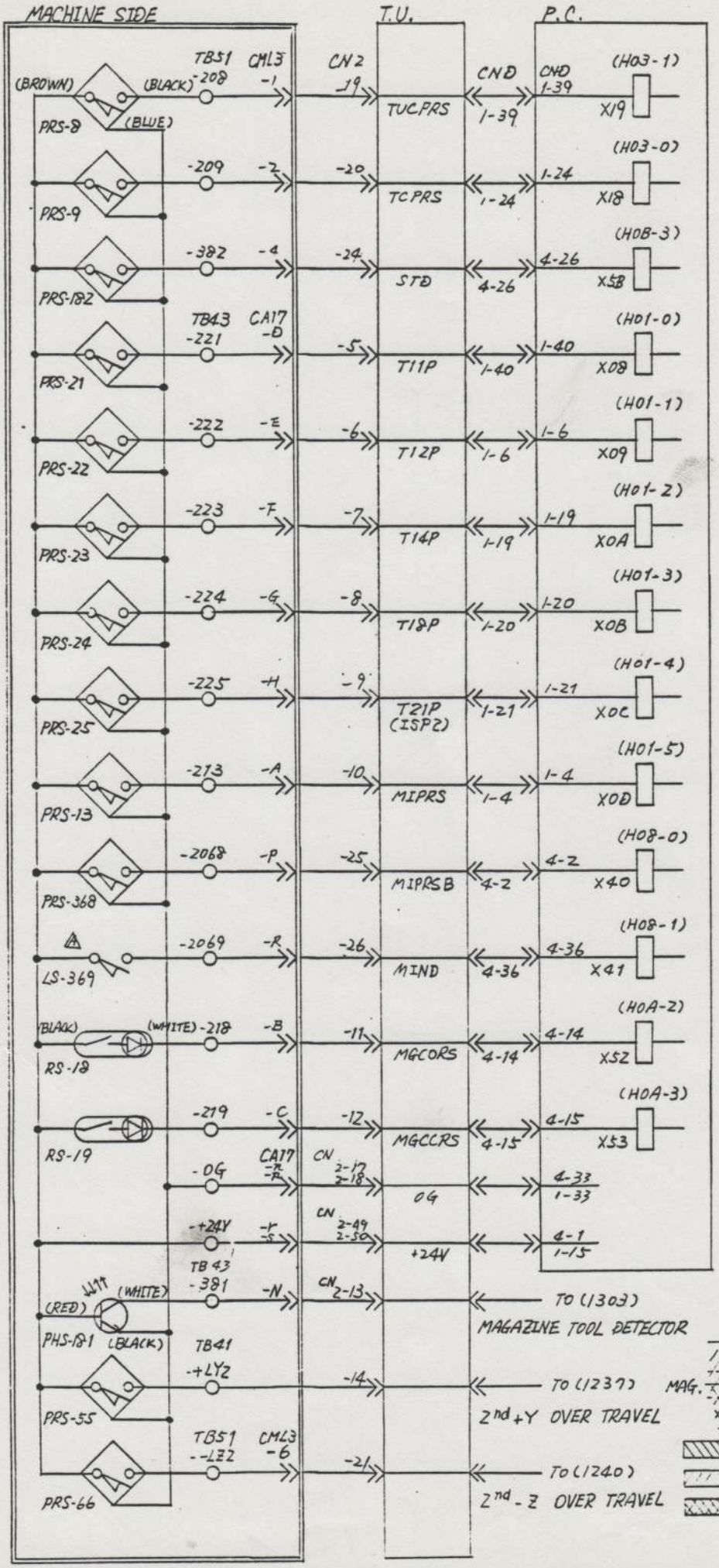

INDEX NUMBER

SHEET | LINE

A MODIFY MAGAZINE MOTOR INPOSITION SENSOR PRS → LS

DRN. BY K.Nakata DATE Jul. 10. 1985
CHK'D BY M.S.Kanda DATE Aug. 8. 85

Mazak
YAMAZAKI MAZAK CORPORATION

TITLE VQC-15/40 MOTION SWITCH INPUT (3)

CONTROL M2V
DRAWING NO. 42416G1409A
SHEET ___ OF ___
SIZE 3

SHEET | LINE

INDEX NUMBER

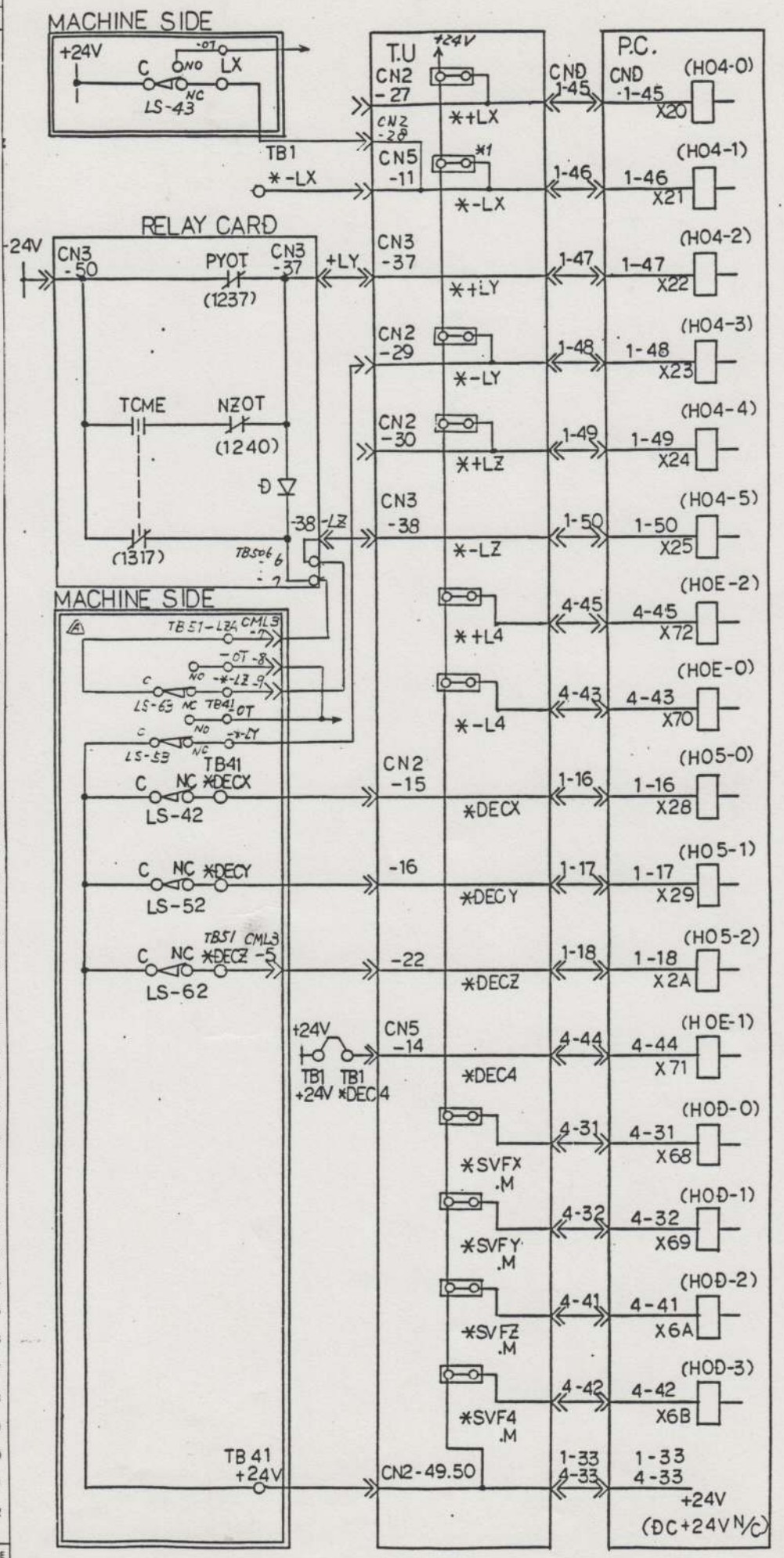

INDEX NUMBER

SHEET | LINE

ADD LS No AND TB BOX No Nov.4.'88 M.Iwai

APPROVED M.Iw.

DESIGNED K.Niiyama

DRAWN

Mazak
YAMAZAKI MAZAK CORPORATION

TITLE
VQC/S/40
MOTION SWITCH
INPUT (4)

CONTROL MAZATROL
DRAWING NO. 424308141OA
SHEET ___ OF ___
SIZE 3

SHEET | LINE

INDEX NUMBER

DRAWING NO. 424308141OA
SHEET ___ OF ___

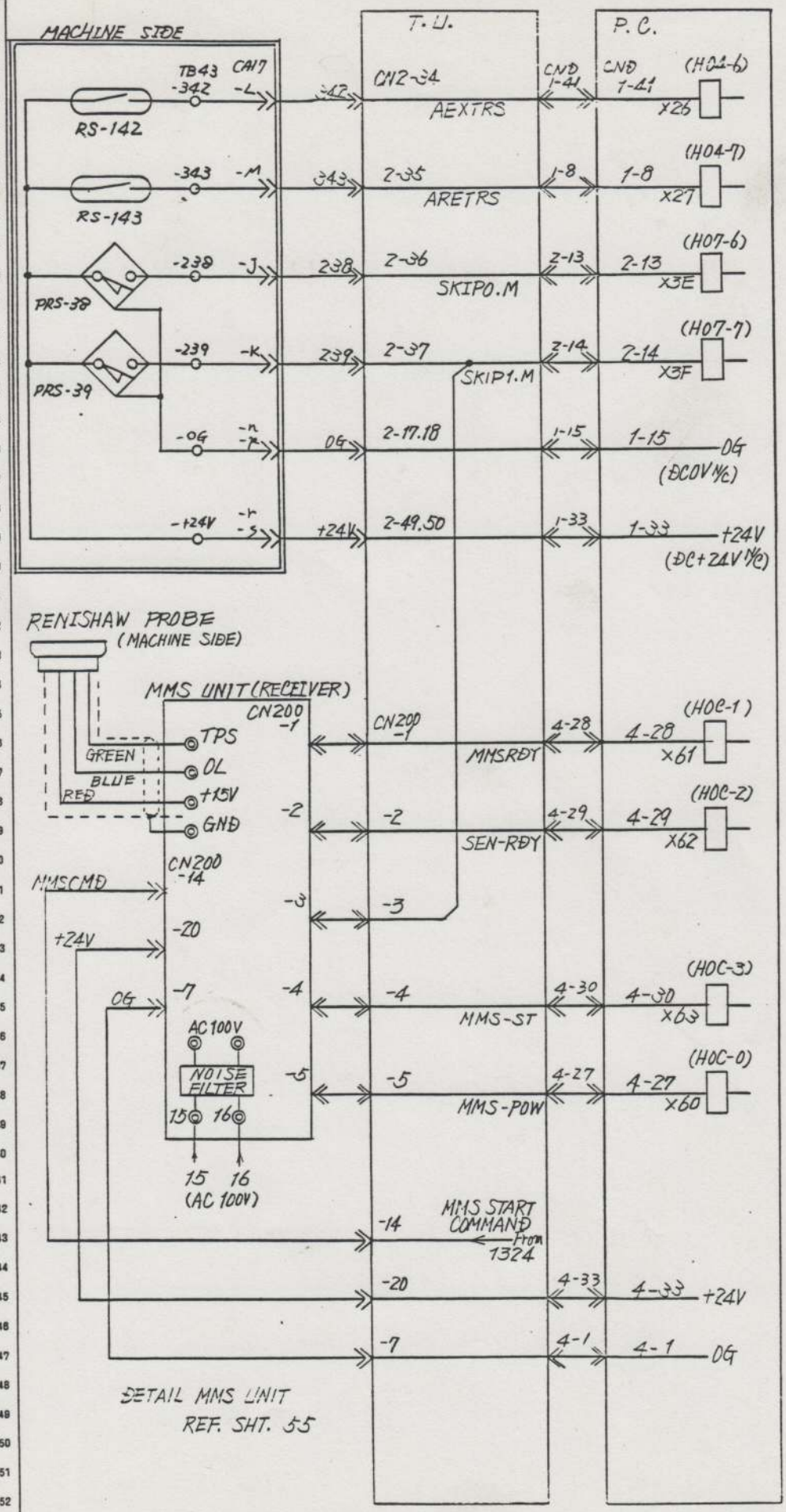

INDEX NUMBER
SHEET 11 LINE

DRN. BY K. Ishida DATE Jul. 12. '93
CHK'D BY DATE

Mazak
YAMAZAKI MAZAK CORPORATION

TITLE VMC 15/40 MOTION SWITCH INPUT (5) SKIP SIGNAL CONTROL

CONTROL M2V
DRAWING NO. 42416 81411
SHEET ___ OF ___
SIZE 3

SHEET 11 LINE
INDEX NUMBER

DRAWING NO. 42416 81411
SHEET ___ OF ___

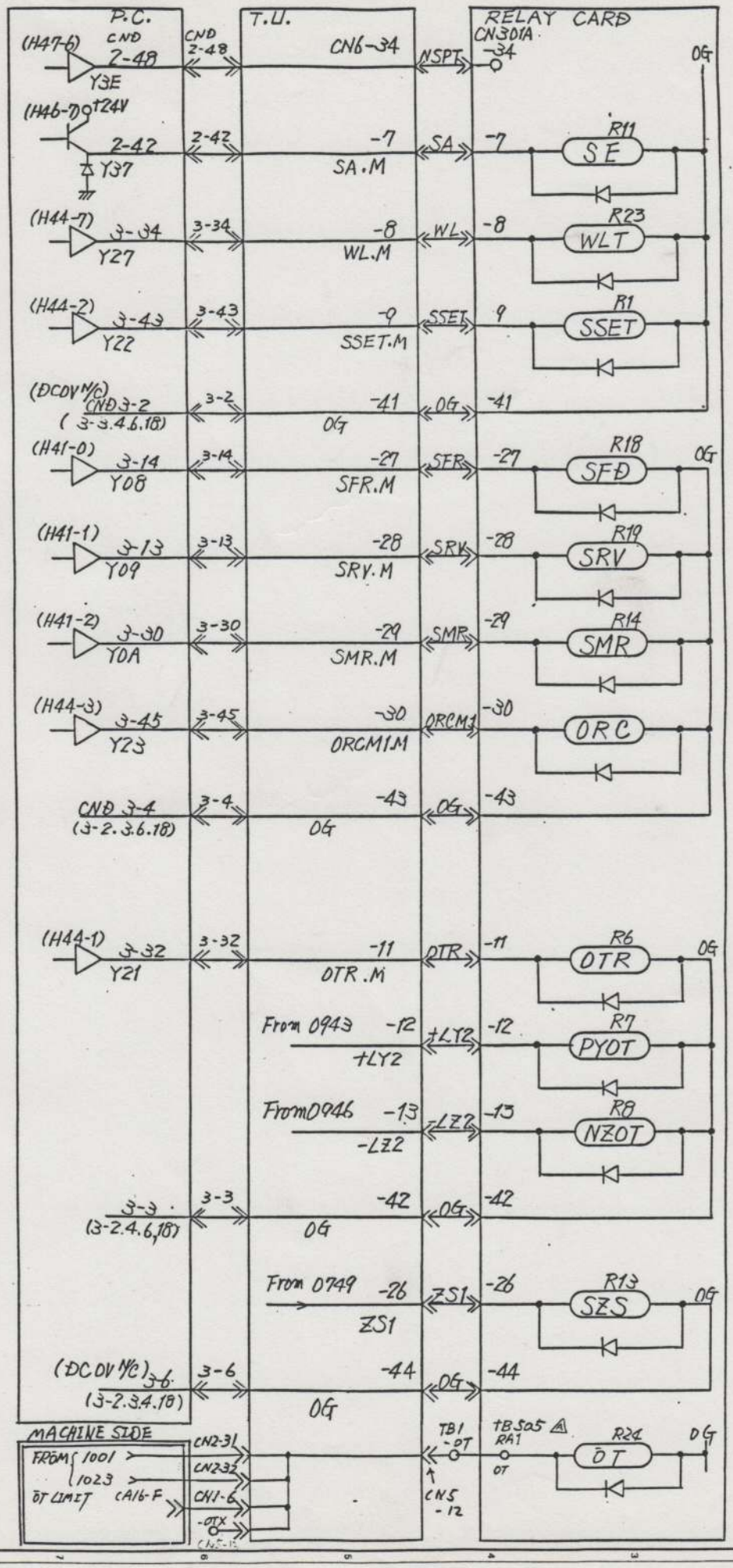

INDEX NUMBER

SHEET | LINE

CHANGE TB505-RA2 → TB505-RA1 NOV. 11. '86 MINA

APPROVED M. M.

DESIGNED K. Kiyoe

DRAWN

Mazak
YAMAZAKI MAZAK CORPORATION

TITLE
VAC-15/40
RELAY DRIVE (1)

CONTROL MAZATROL

DRAWING NO. 4243081412A

SHEET 3 OF

SIZE

SHEET | LINE

INDEX NUMBER

DRAWING NO. 4243081412A

SHEET OF

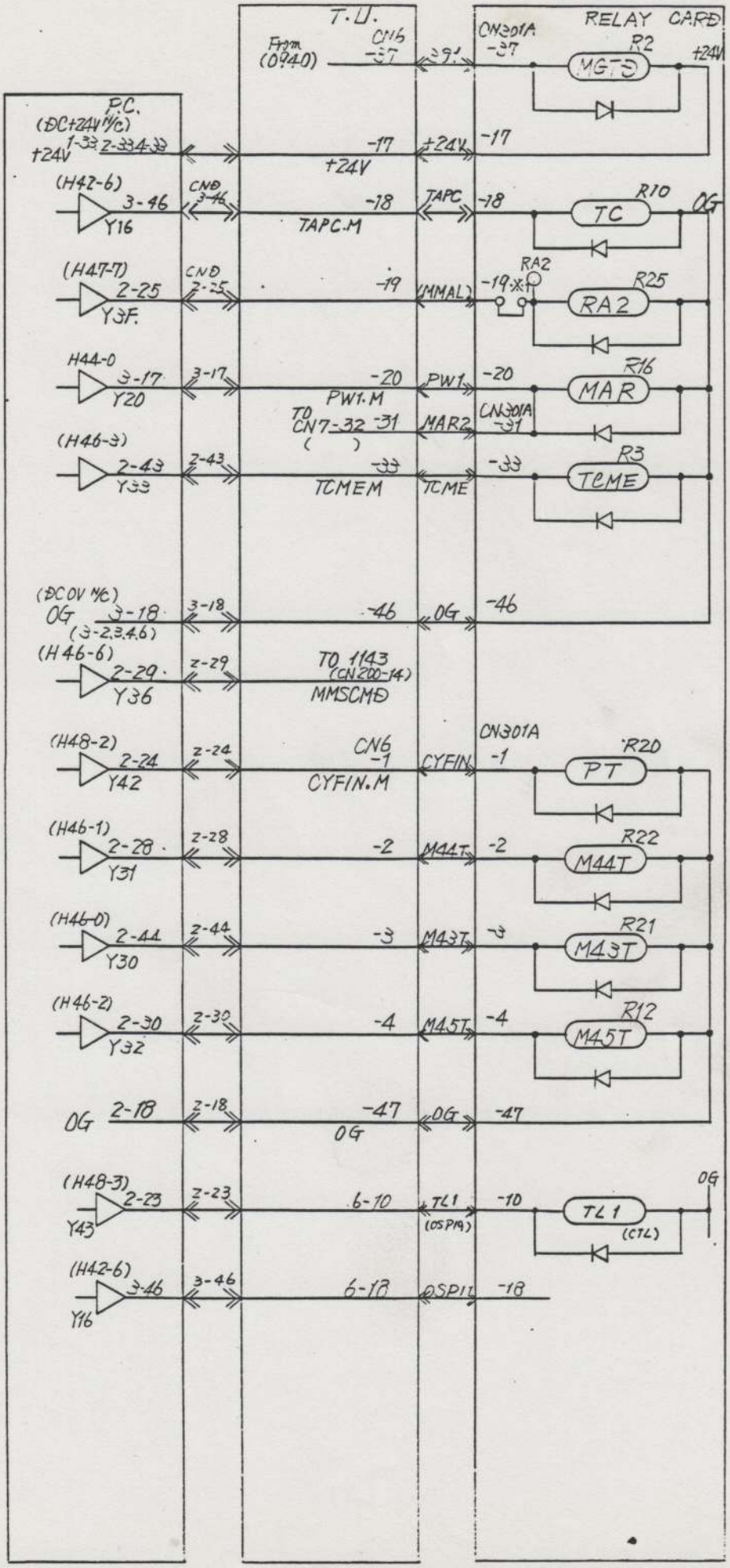

INDEX NUMBER
SHEET 13 LINE

DRN. BY K.Ishiga
DATE Nov.20.'98
CHK'D BY M.M.
DATE

Mazak
YAMAZAKI MAZAK CORPORATION

TITLE VQC-15/40
RELAY DRIVE (2)

CONTROL MZV
DRAWING NO. 4241681413
SHEET OF
SIZE 3

SHEET 13 LINE
INDEX NUMBER

DRAWING NO. 4241681413
SHEET OF

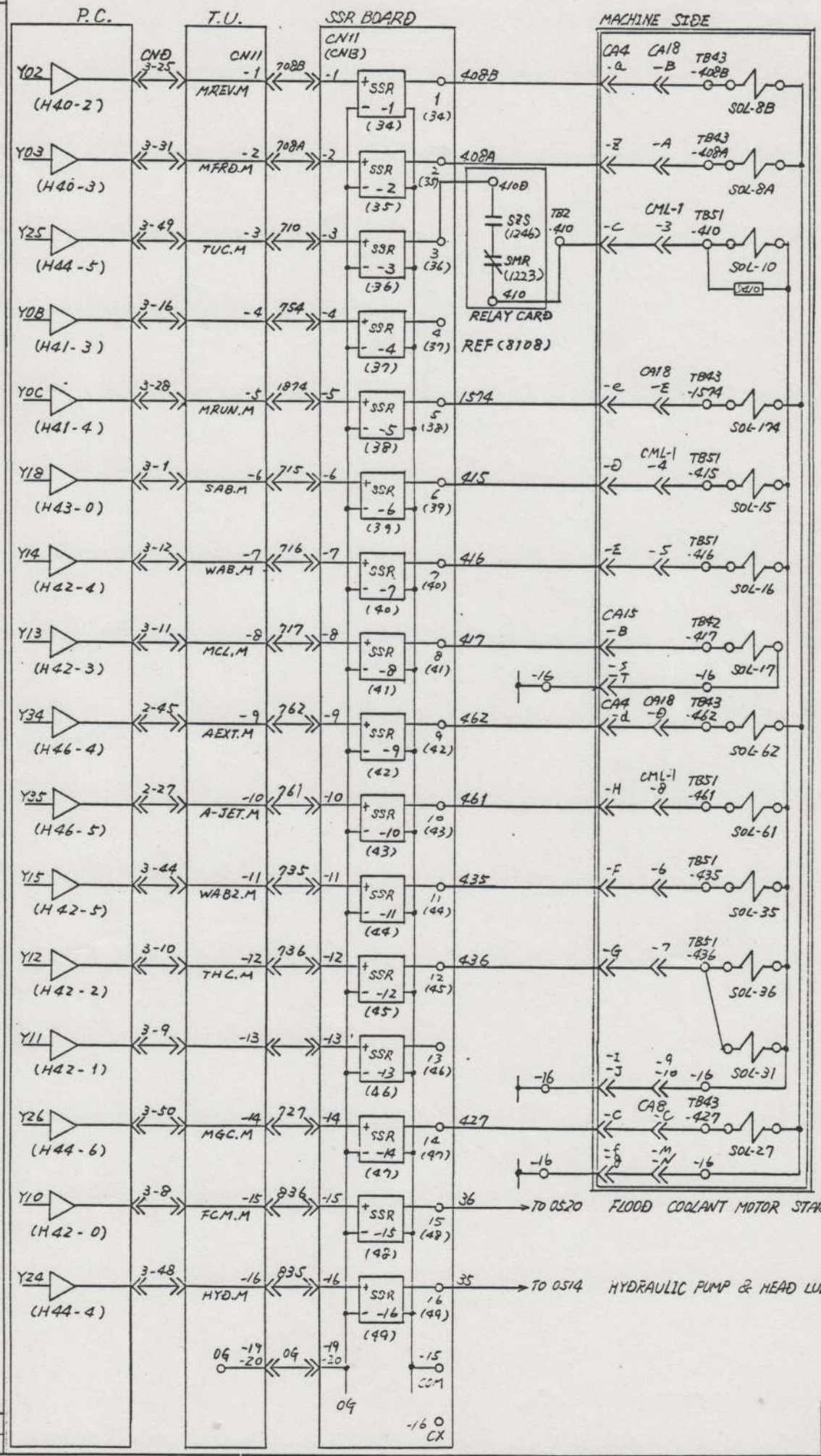

INDEX NUMBER | SHEET | LINE

ADD COMMENT

DRN. BY K.M DATE 11.10.85
CHK'D BY DATE

Mazak
YAMAZAKI MAZAK CORPORATION

TITLE VQC-15/40 SOLENOID DRIVE (1)

CONTROL M2V
DRAWING NO. 42416814 14A
SHEET 1 OF 2
SIZE 3

DRAWING NO. 42416814 14A
SHEET 1 OF 3

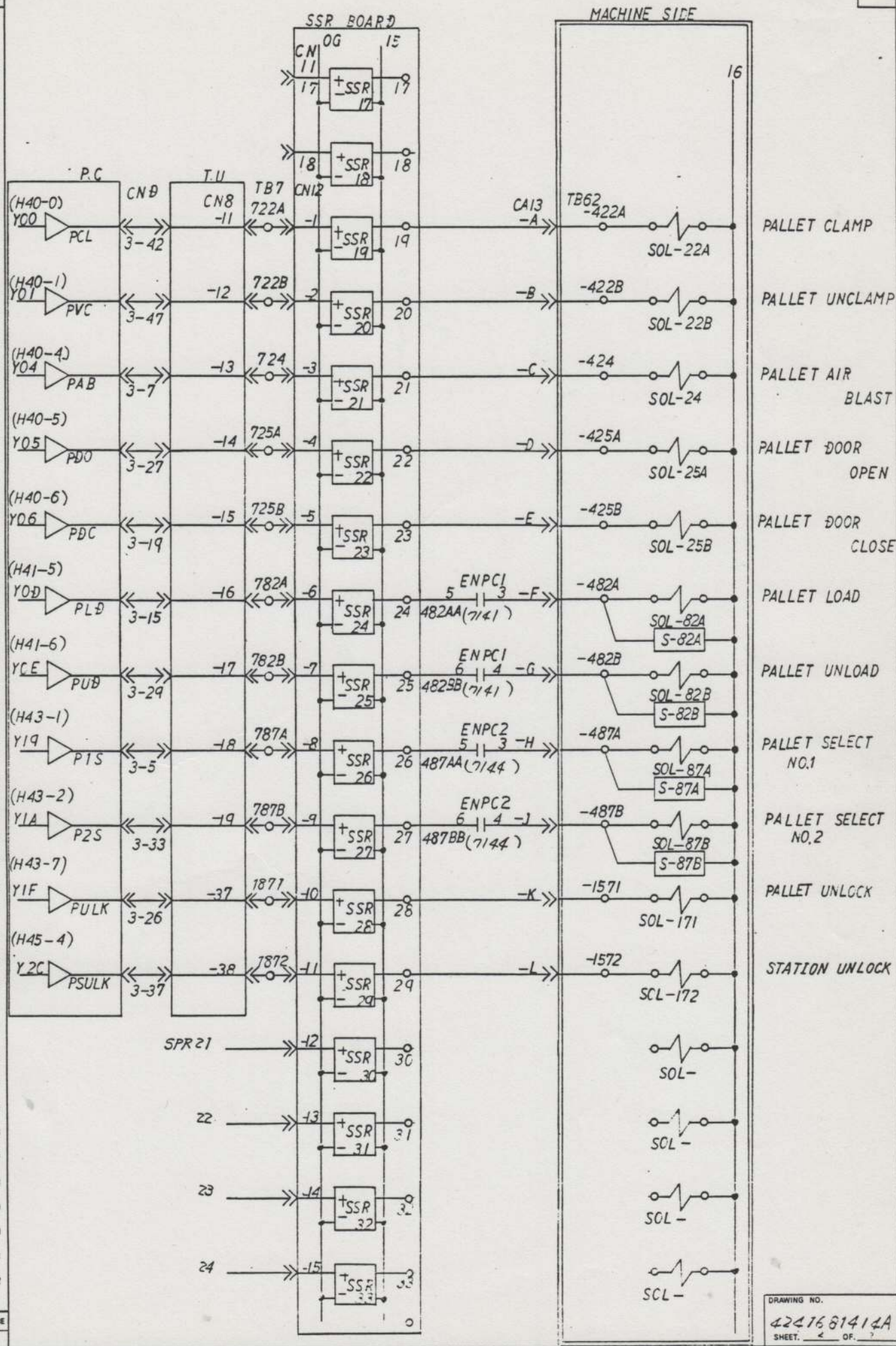

INDEX NUMBER

SHEET	LINE
	01
	02
	03
	04
	05
	06
	07
	08
	09
	10
	11
	12
	13
	14
	15
	16
	17
	18
	19
	20
	21
	22
	23
	24
	25
	26
	27
	28
	29
	30
	31
	32
	33
	34
	35
	36
	37
	38
	39
	40
	41
	42
	43
	44
	45
	46
	47
	48
	49
	50
	51
	52

DRN. BY K.A.I DATE 1.12.85
CHK'D BY H.S DATE 1.8.85

Mazak
YAMAZAKI MAZAK CORPORATION

TITLE VQC35/40 SOLENOID DRIVE (2)

CONTROL M2V
DRAWING NO. 424168141A
SHEET 2 OF 7
SIZE 3

SHEET LINE
INDEX NUMBER

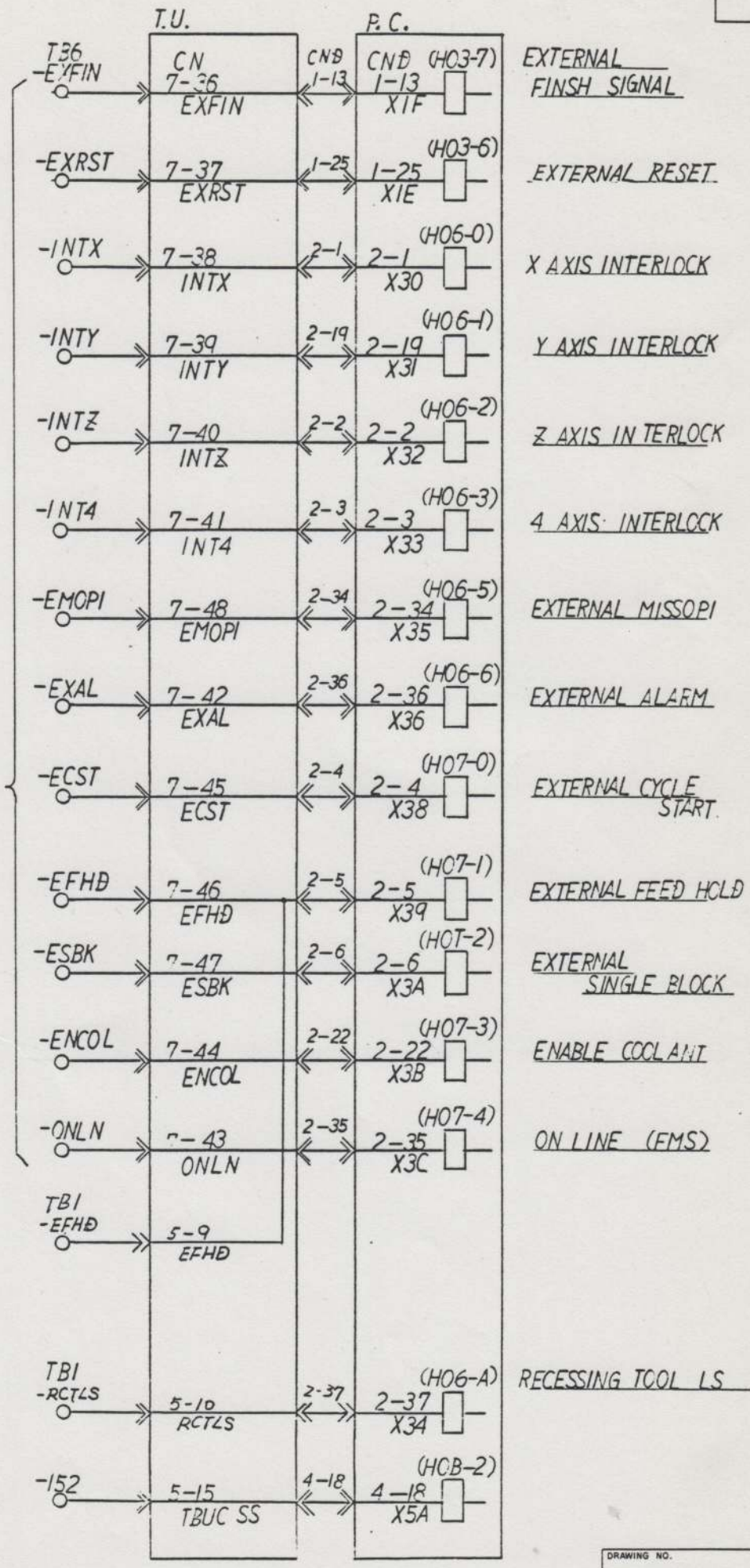

INDEX NUMBER

SHEET | LINE

DRN. BY K.A.
DATE 11.12.85
CHK'D BY H.S
DATE Nov. 8. 85

Mazak
YAMAZAKI MAZAK CORPORATION

TITLE VCC-15/10
INPUT (1)
(OPTION)

CONTROL M2V
DRAWING NO. 424158421
SHEET OF

SIZE 3

SHEET 21 LINE

INDEX NUMBER

DRAWING NO. 424158421
SHEET OF

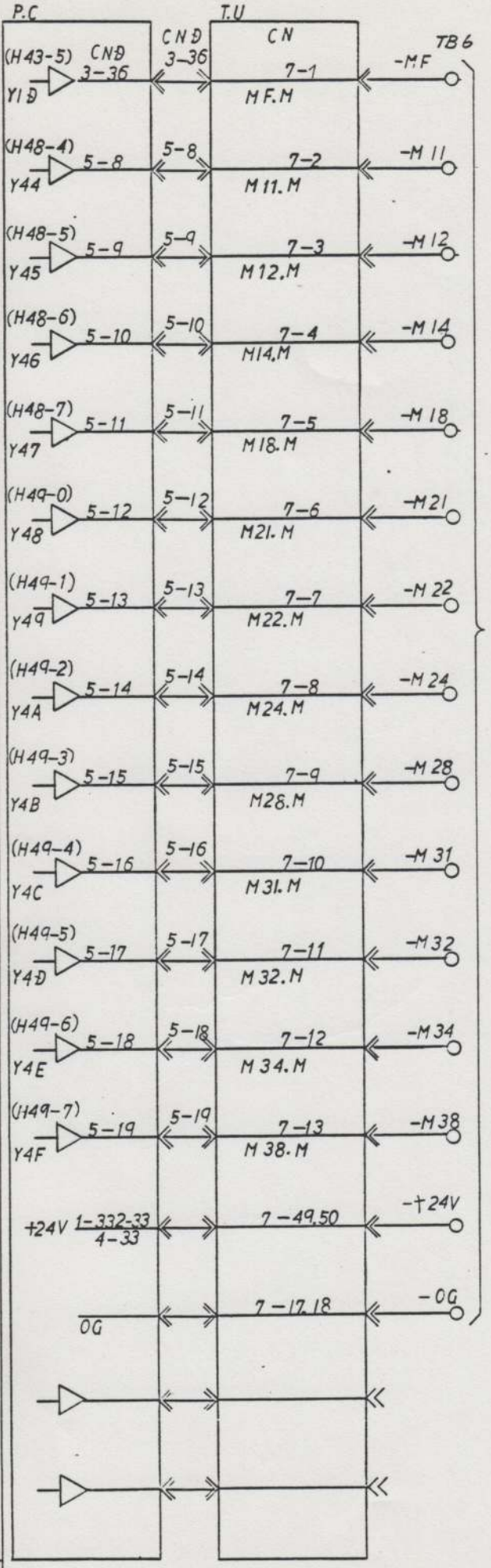

M FUNCTION
M100
M BCD 11
M BCD 12
M BCD 14
M BCD 18
M BCD 21
M BCD 22
M BCD 24
M BCD 28
M BCD 31
M BCD 32
M BCD 34
M BCD 38

NEED CN7 CABLE
(OPTION)

INDEX NUMBER
SHEET
LINE

DRN. BY K.M DATE 31.10.'85
CHK'D BY N.S DATE 4/5 F.J.

Mazak
YAMAZAKI MAZAK CORPORATION

TITLE VQC-15/40 OUTPUT (1) (OPTION)

CONTROL M2V
DRAWING NO. 42415 81424
SHEET 3 OF
SIZE

DRAWING NO. 42415 81424
SHEET OF

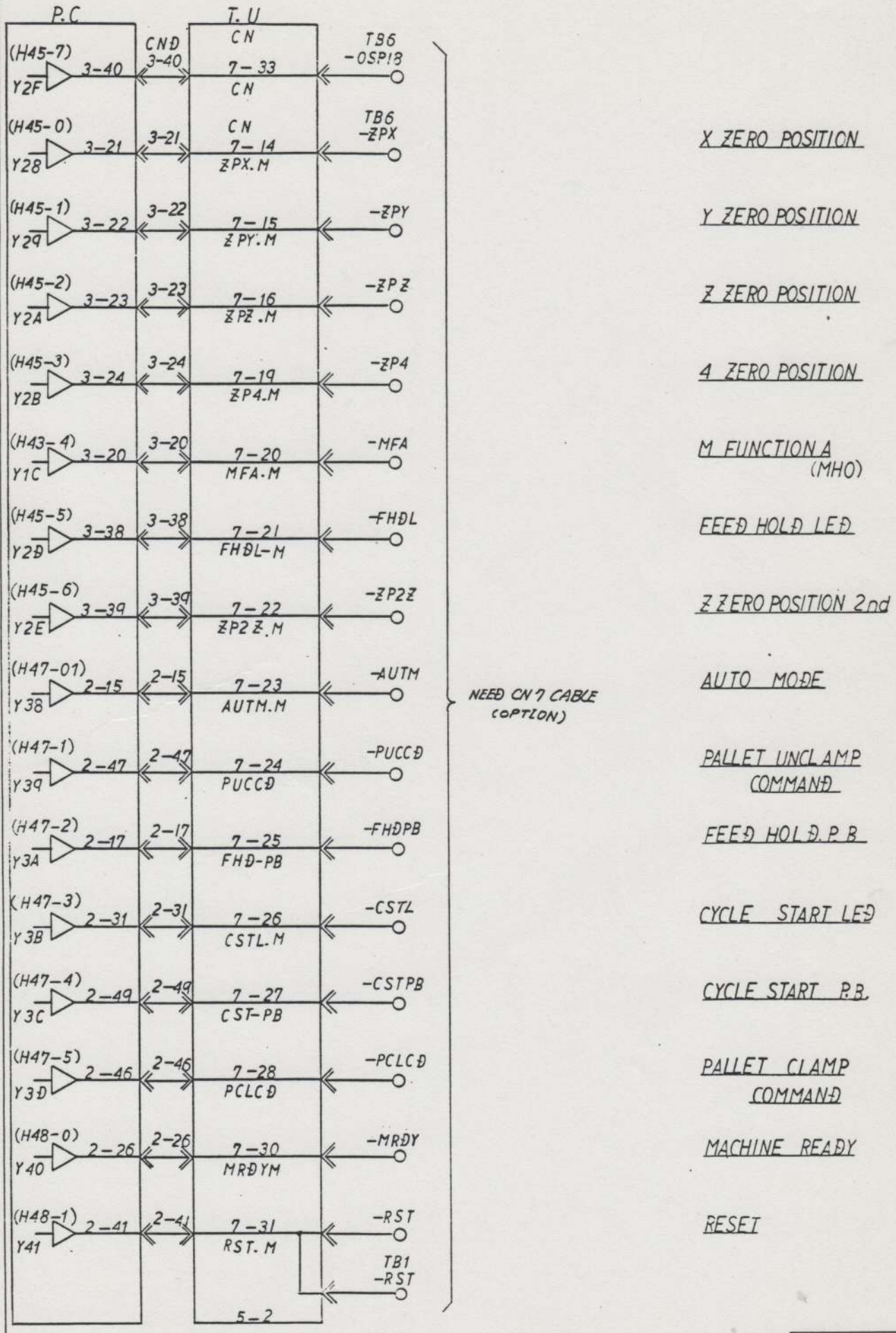

INDEX NUMBER
SHEET
LINE

DRN. BY K.M
DATE 1.10.'85
CHK'D BY M.S
DATE Aug 8.'85

Mazak
YAMAZAKI MAZAK CORPORATION

TITLE VQC-15/40
OUTPUT (2)
(OPTION)

CONTROL M2V
DRAWING NO. 42415 81425
SHEET ___ OF ___
SIZE 3

DRAWING NO. 42415 81425
SHEET ___ OF ___

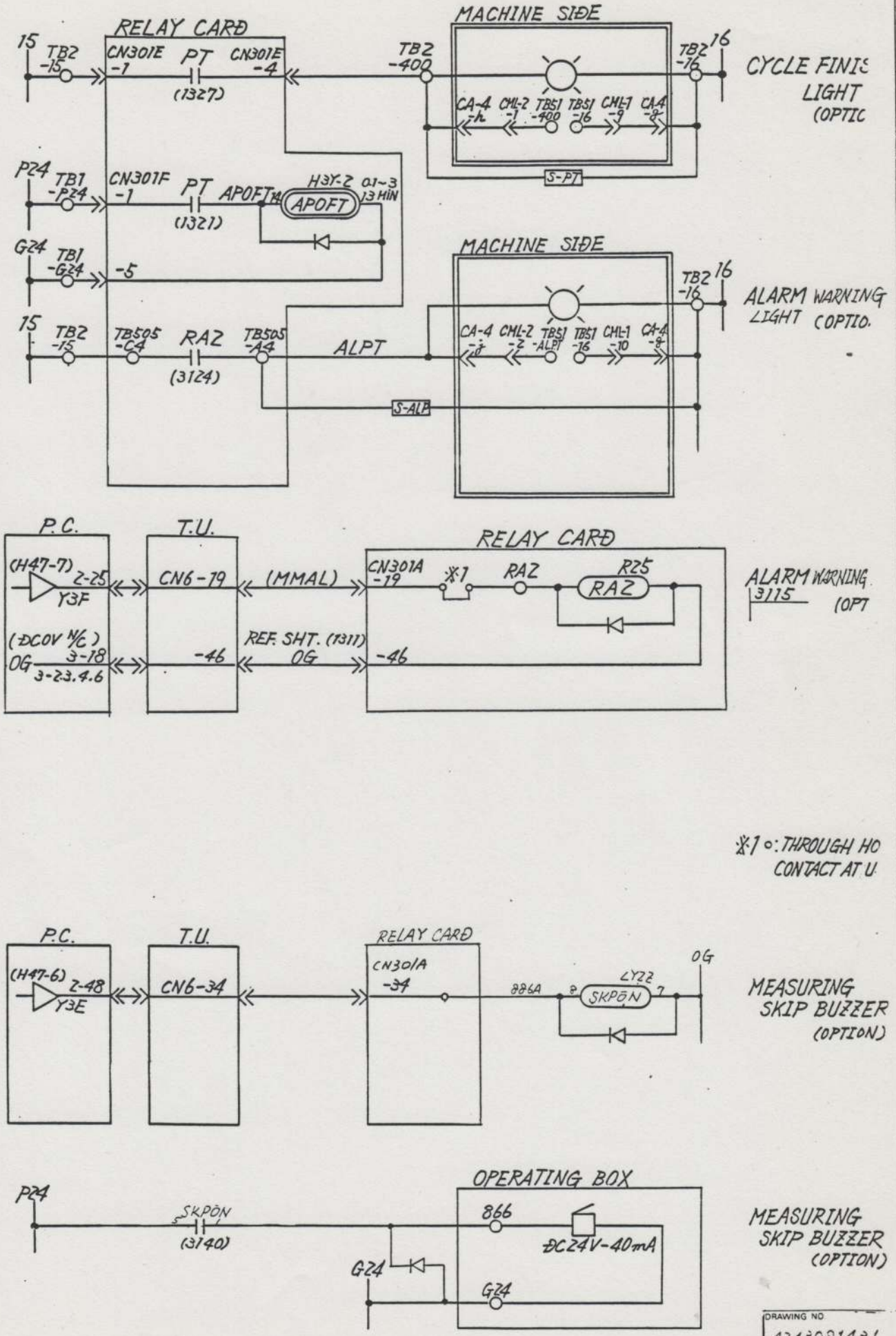

INDEX NUMBER

SHEET	LINE

APPROVED: h. h.
DESIGNED: K. Ohiwa
DRAWN:

Mazak
YAMAZAKI MAZAK CORPORATION

TITLE: VQC-15/40 WARNING LIGHT & AUTO POWER OFF (OPTION)

CONTROL: MAZATROL
DRAWING NO. 4243081431
SHEET 1 OF 2
SIZE 3

DRAWING NO. 4243081431
SHEET 1 OF 2

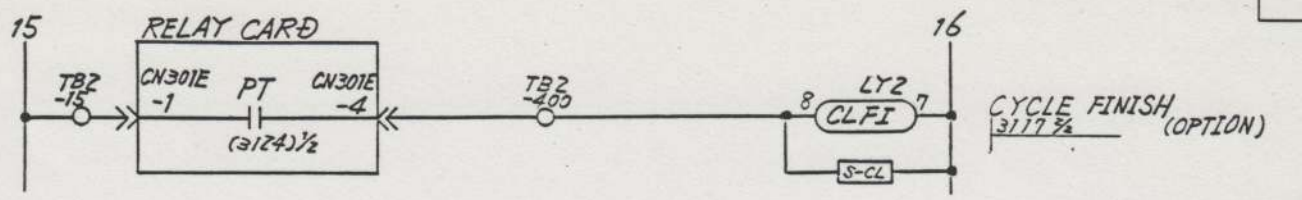

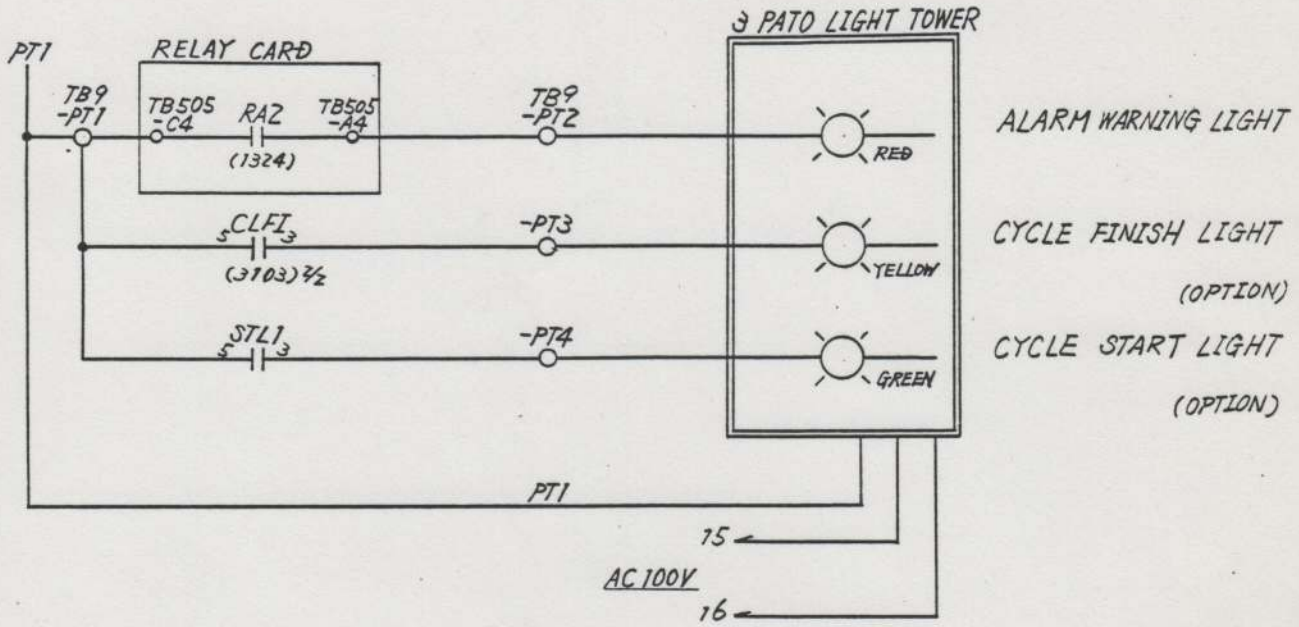

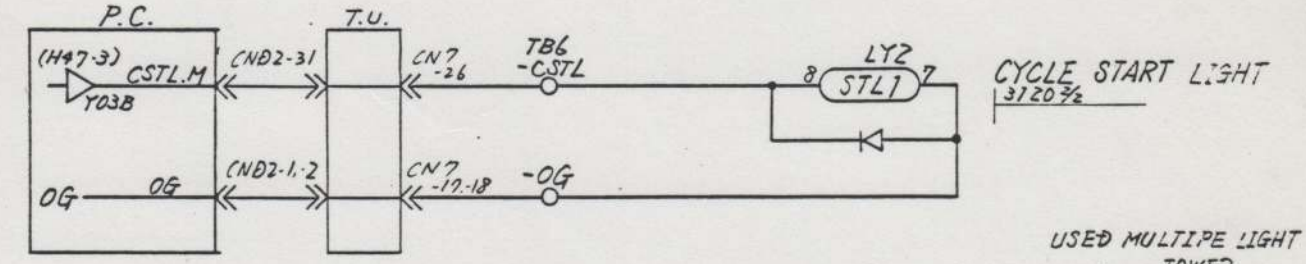

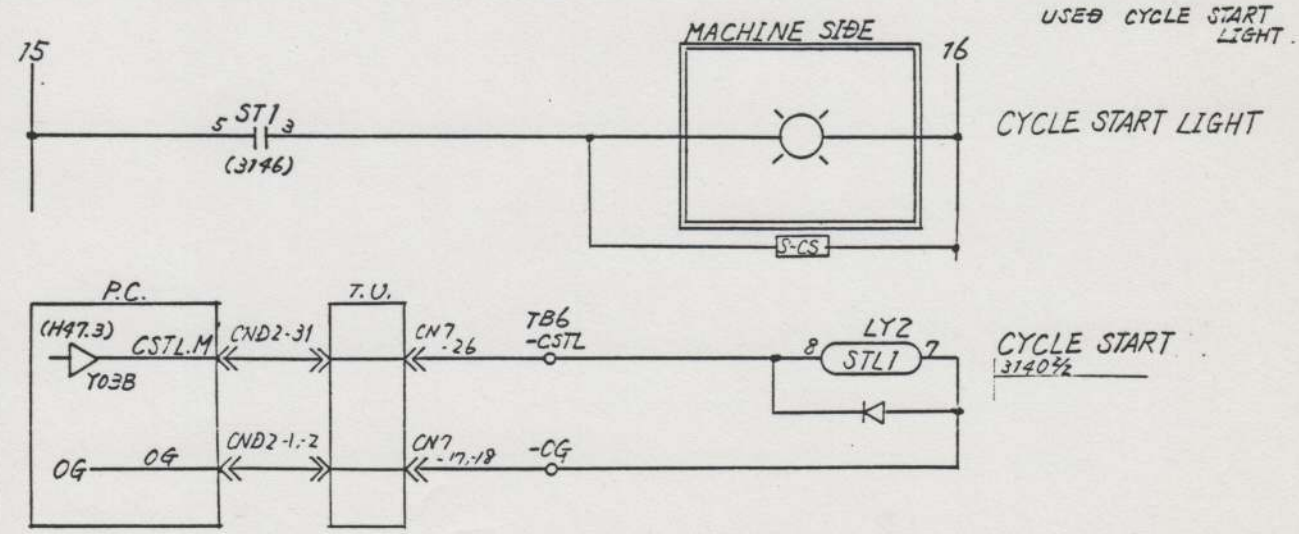

DRAWING NO. 42416 81431
SHEET 2 OF 2

INDEX NUMBER | SHEET | LINE

DRN. BY Y. Okuda DATE Dec 12. '85
CHK'D BY ____ DATE ____

Mazak
YAMAZAKI MAZAK CORPORATION

TITLE VQC-15/40 (option) MULTIPLE LIGHT TOWER & CYCLE START LIGHT

CONTROL M2V
DRAWING NO. 42416 81431
SHEET 2 OF 2
SIZE 3

SHEET | LINE
INDEX NUMBER

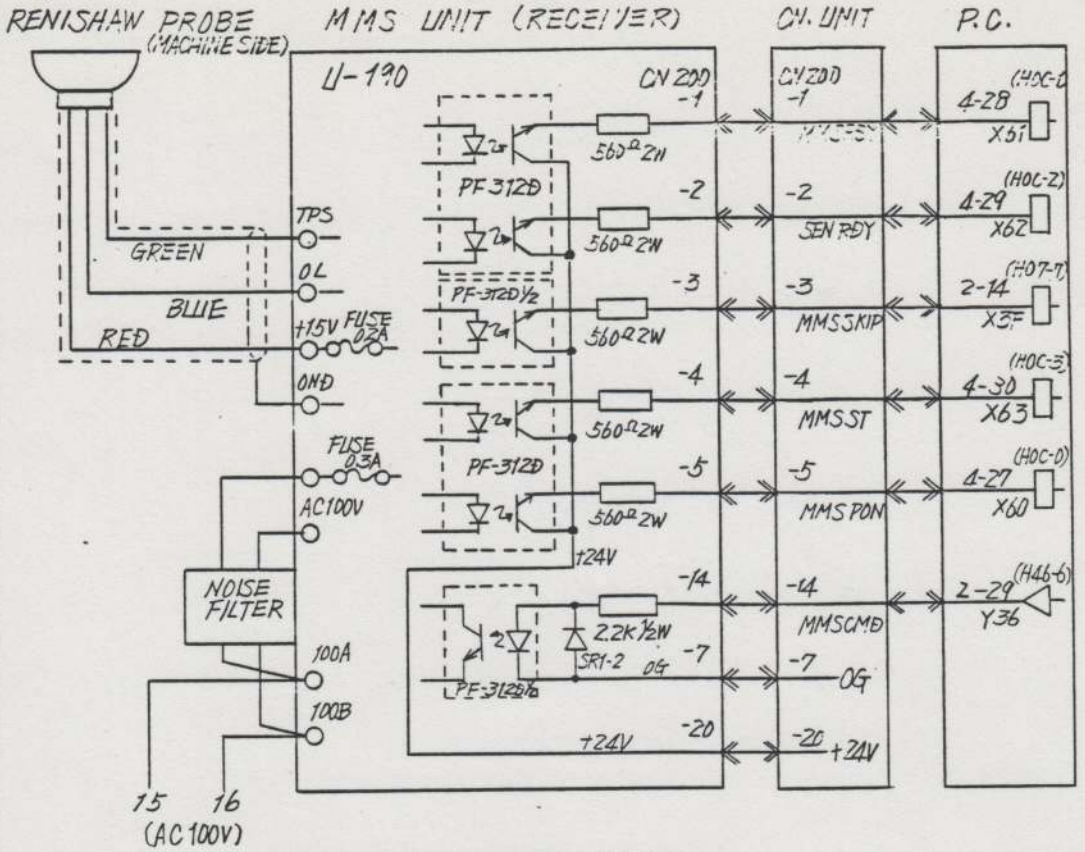

MMS INTERFACE UNIT TIMING CHART

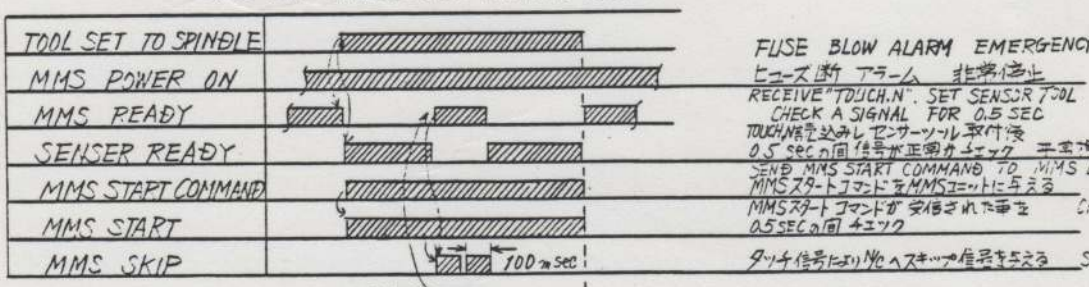

TOUCH.N
100 計測 TOOL 割出 SELECT SENSOR TOOL
センサーツール取付 SET THE SENSOR TOOL
軸移動 AXIS MOVE
計測移動 MEASURE MOVE
MDI MODE
MDI モードで
COODINATES SKIP
サーボウスキップ
+X
サイクルスタート
持点点より脱出 LEAVE THE TOUCH POINT
TOOL返却動作途中 → DURING TOOL RETURN
センサーツール抜きとり → PULL OUT SENSOR TOOL

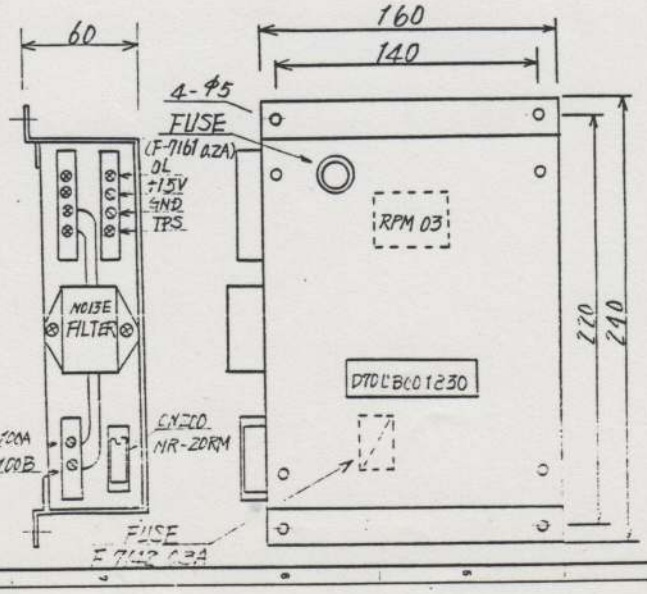

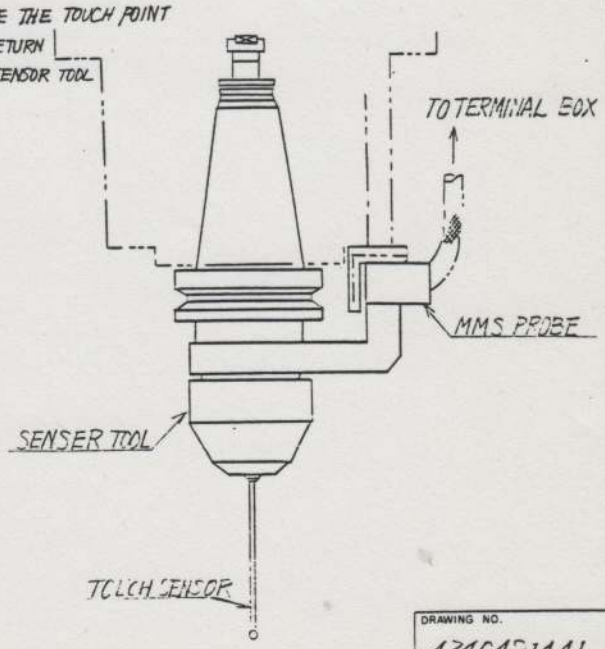

INDEX NUMBER	
SHEET	41
DRN. BY	K.Hirata
DATE	84.12.24
CHK'D BY	M.M.
DATE	May. 1. '85
Mazak	YAMAZAKI MAZAK CORPORATION
TITLE	VMC-15/40 MMS INTERFACE DIAGRAM
CONTROL	MZV
DRAWING NO.	4240481441
SHEET	3
OF	
SIZE	
SHEET	41
LINE	
INDEX NUMBER	

DRAWING NO. 4240481441
SHEET. OF.

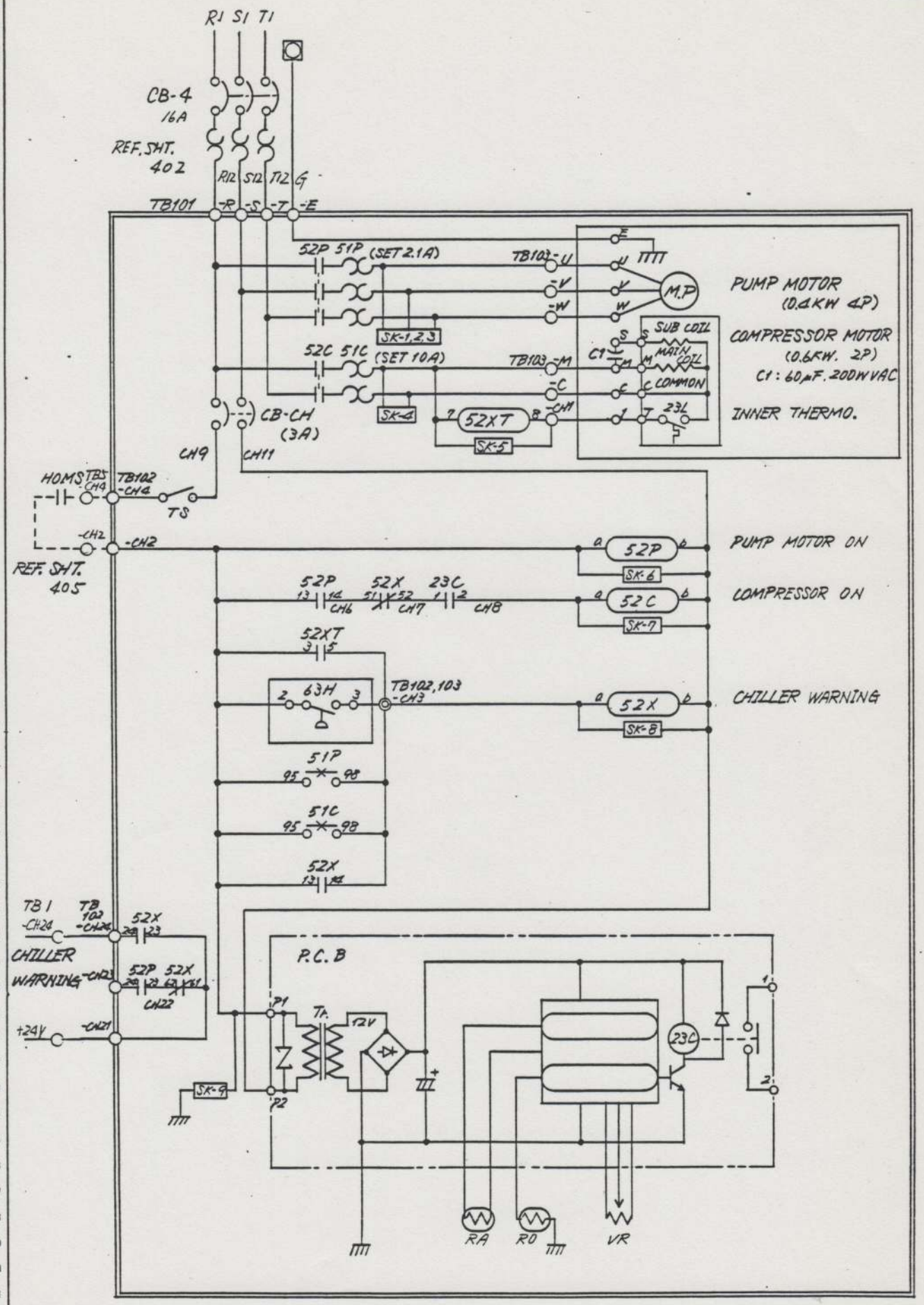

INDEX NUMBER
SHEET LINE

DRN. BY K.Ishiura DATE 84.8.24
CHK'D BY M.M. DATE " " "

Mazak
YAMAZAKI MAZAK CORPORATION

TITLE
WQC-15/40
CHILLER UNIT
(AVS-10°C)

CONTROL MZV
DRAWING NO. 4240481450
SHEET 1 OF 3
SIZE 3

DRAWING NO. 4240481450
SHEET 1 OF 3

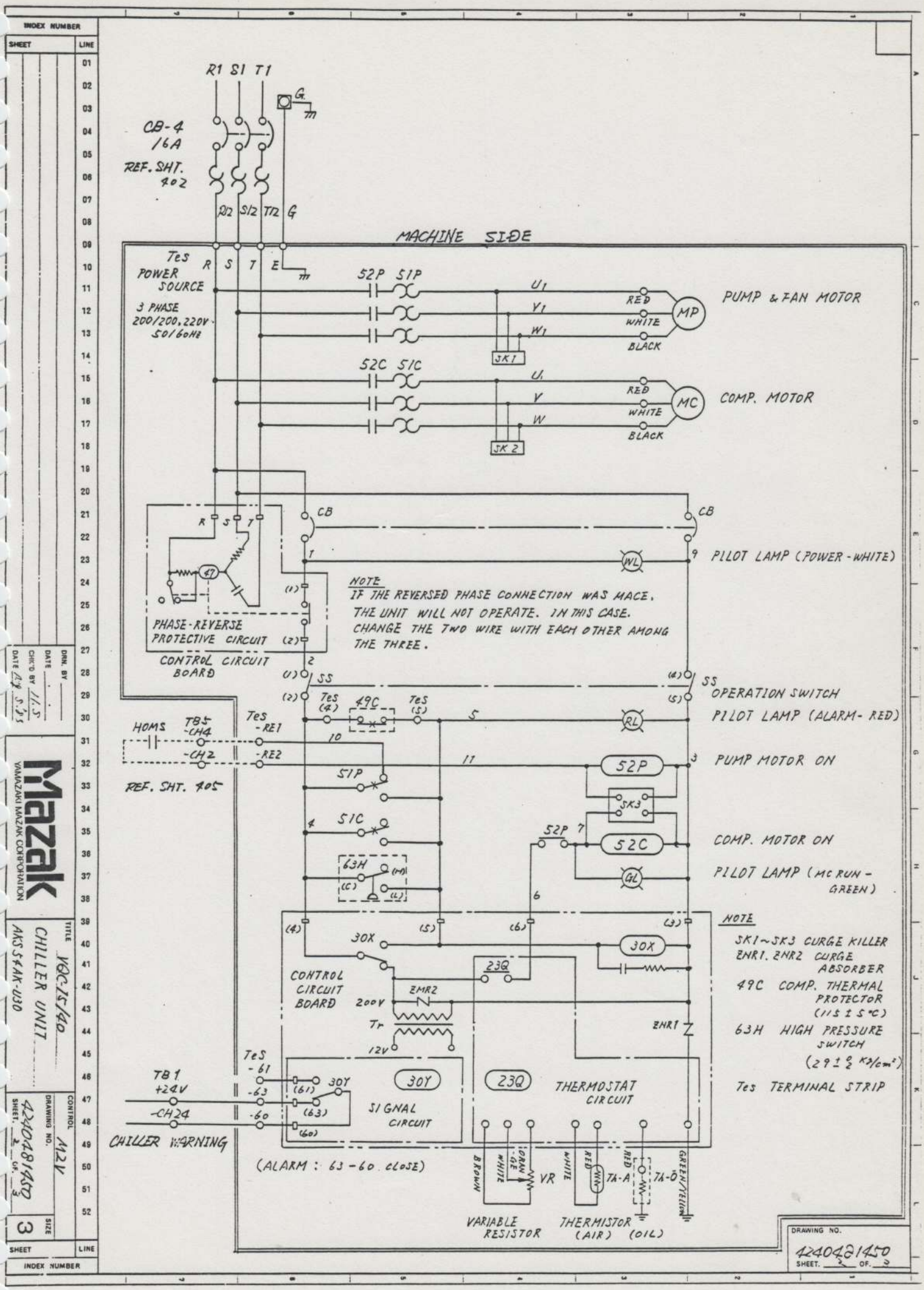
R1 S1 T1
G
CB-4
16A
REF. SHT. 402
R2 S2 T2 G
MACHINE SIDE
Tes
POWER SOURCE
3 PHASE 200/200,220V 50/60Hz
R S T E
52P 51P
U1 V1 W1
RED WHITE BLACK
MP
PUMP & FAN MOTOR
SK1
52C 51C
U V W
MC
COMP. MOTOR
SK 2
CB
WL
PILOT LAMP (POWER-WHITE)
47
PHASE-REVERSE PROTECTIVE CIRCUIT
CONTROL CIRCUIT BOARD
NOTE
IF THE REVERSED PHASE CONNECTION WAS MACE. THE UNIT WILL NOT OPERATE. IN THIS CASE. CHANGE THE TWO WIRE WITH EACH OTHER AMONG THE THREE.
SS
OPERATION SWITCH
49C
RL
PILOT LAMP (ALARM- RED)
HOMS
TB5 -CH4
-CH2
Tes -RE1
-RE2
REF. SHT. 405
51P
52P
SK3
PUMP MOTOR ON
51C
63H
52C
COMP. MOTOR ON
GL
PILOT LAMP (MC RUN - GREEN)
30X
23Q
CONTROL CIRCUIT BOARD
ZNR2
200V
Tr
12V
ZNR1
NOTE
SK1~SK3 CURGE KILLER
ZNR1. ZNR2 CURGE ABSORBER
49C COMP. THERMAL PROTECTOR (115 ± 5 °C)
63H HIGH PRESSURE SWITCH (29 ± 2 Kg/cm²)
Tes TERMINAL STRIP
TB1
+24V
-CH24
CHILLER WARNING
Tes -61
-63
-60
30Y
SIGNAL CIRCUIT
THERMOSTAT CIRCUIT
(ALARM : 63 - 60 CLOSE)
BROWN
WHITE
ORANGE
VR
RED
TA-A
TA-O
GREEN/YELLOW
VARIABLE RESISTOR
THERMISTOR (AIR) (OIL)
DRAWING NO.
424042145O
SHEET. 2 OF. 3
INDEX NUMBER
SHEET
LINE
DRN. BY
DATE
CHK'D BY
DATE
Mazak
YAMAZAKI MAZAK CORPORATION
TITLE
YOC-75/40
CHILLER UNIT
AKS 54A-U30
CONTROL
DRAWING NO.
424048140
SHEET. 2 OF. 3
M2V
SIZE
3

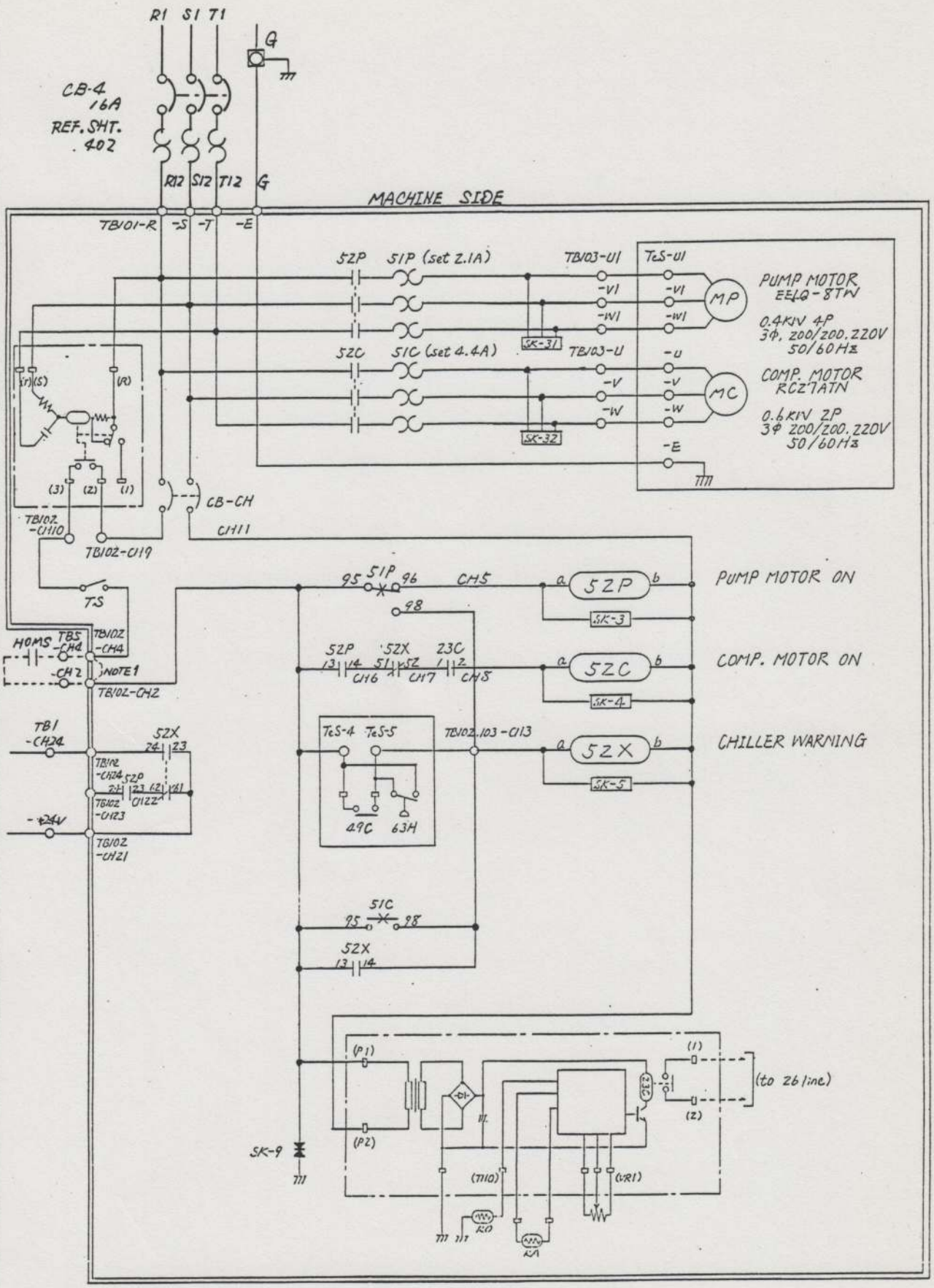

NOTE 1 REMOVE JUMPER CH2-CH4 (DASHED LINES), CONTACT "HOMS".

INDEX NUMBER
SHEET LINE

DRN. BY H. Yoshida DATE Oct. 7. '85
CHK'D BY H.J.
DATE Aug. 8. '93

Mazak
YAMAZAKI MAZAK CORPORATION

TITLE
CHILLER UNIT
AKM-104Y
WIRING DIAGRAM

CONTROL M2V
DRAWING NO. 4240481450
SHEET 3 OF 3
SIZE 3

DRAWING NO. 4240481450
SHEET 3 OF 3

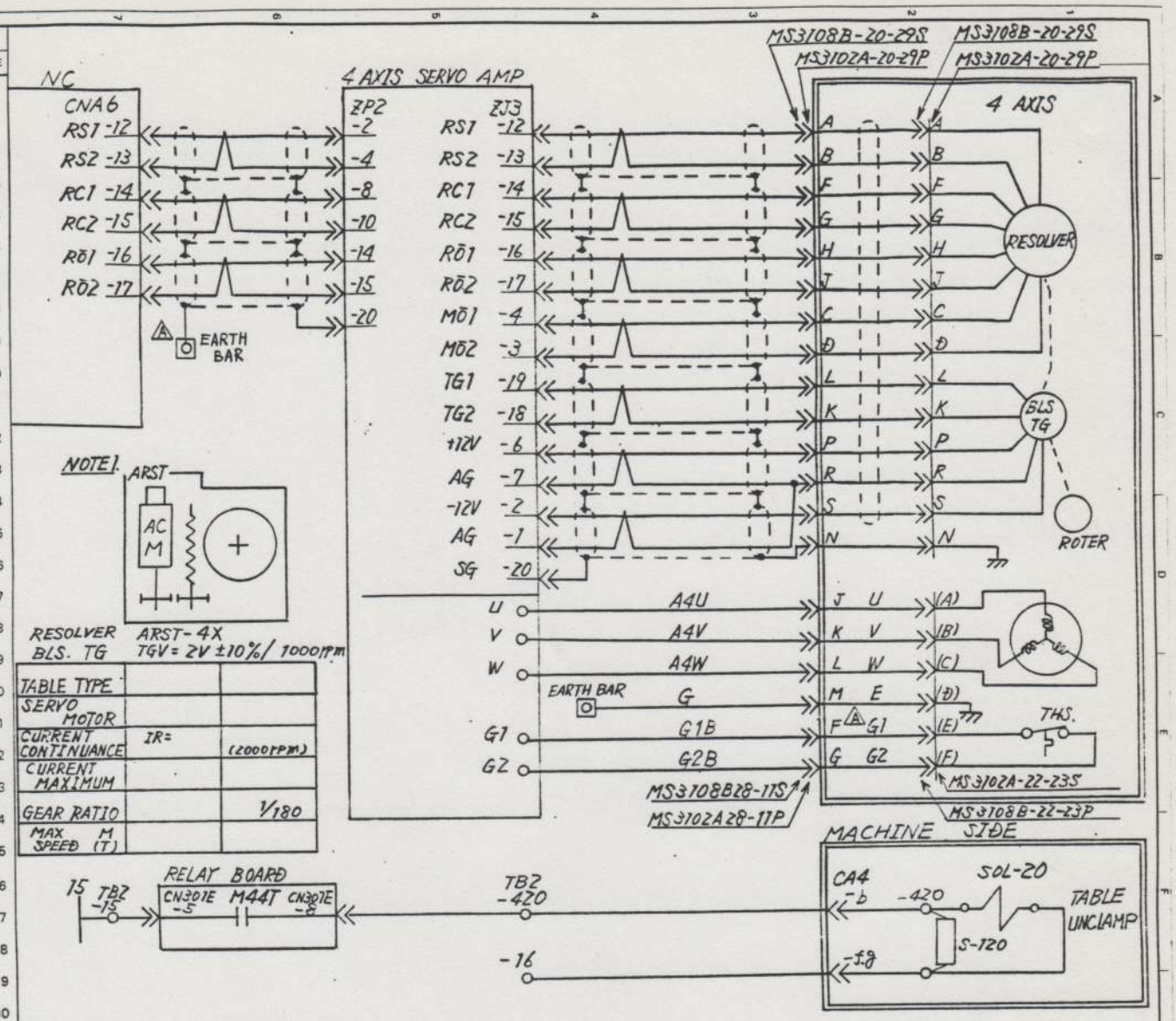

INDEX NUMBER

SHEET | LINE

A CNA6-20 NOTHING (TO EARTH BAR), CHANGE PIN No. H.F. OCT.4, '86 Y.N

APPROVED

DESIGNED

DRAWN

Mazak
YAMAZAKI MAZAK CORPORATION

TITLE VQC-15/40 NC TABLE (OPTION) (TUSDAKOMA)

CONTROL MAZATROL

DRAWING NO. 4243081453A

SHEET 1 OF 2

SIZE 3

SHEET | LINE

INDEX NUMBER

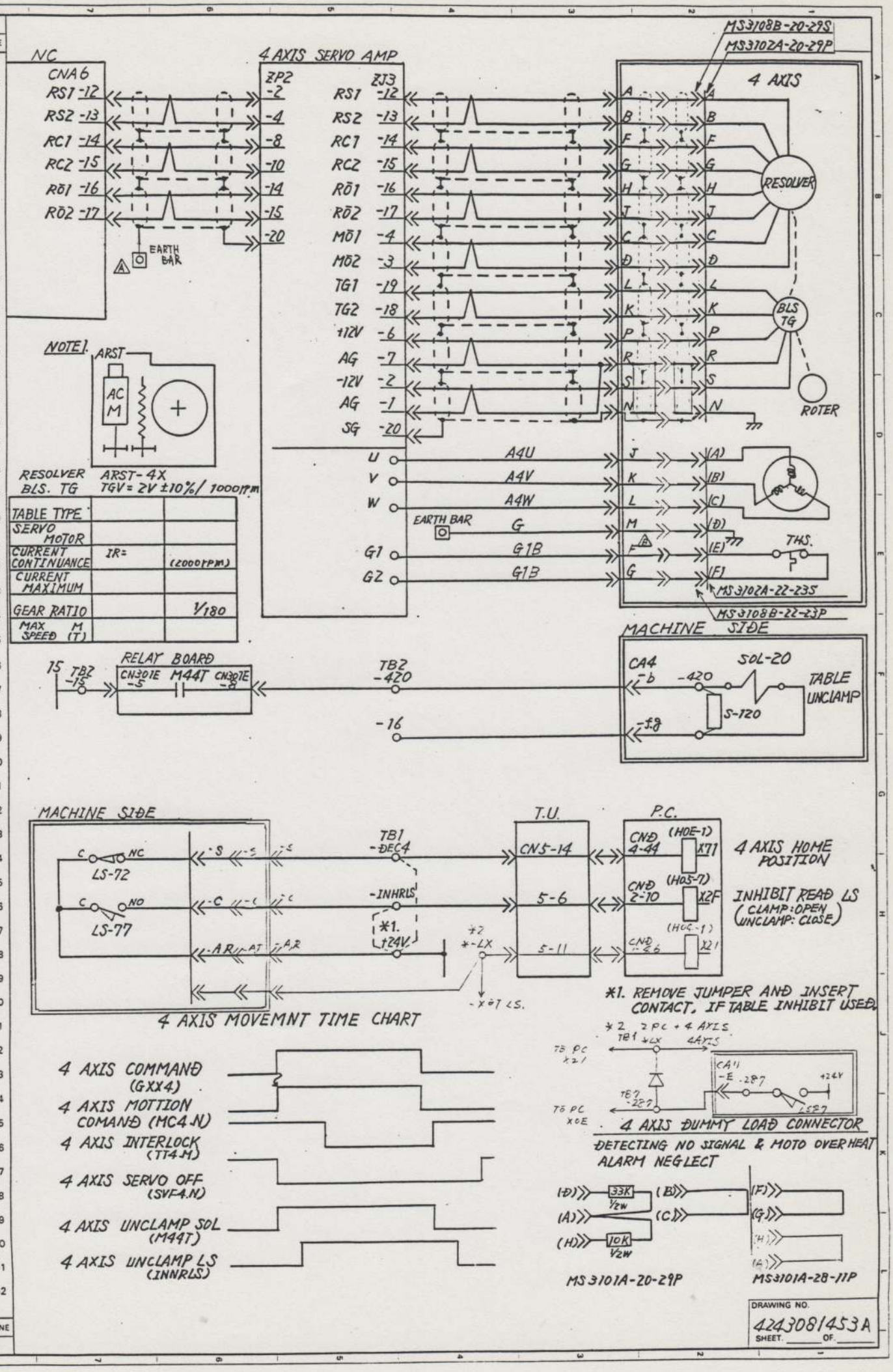
NC
CNA6
4 AXIS SERVO AMP
ZP2
ZJ3
MS3108B-20-29S
MS3102A-20-29P
4 AXIS
RESOLVER
BLS TG
ROTER
EARTH BAR
NOTE1.
ARST
AC M
RESOLVER ARST-4X
BLS. TG TGV=2V±10%/1000rpm
TABLE TYPE
SERVO MOTOR
CURRENT CONTINUANCE IR= (2000rpm)
CURRENT MAXIMUM
GEAR RATIO 1/180
MAX SPEED (T)
A4U
A4V
A4W
G
G1B
G1B
THS.
MS3102A-22-23S
MS3108B-22-23P
MACHINE SIDE
CA4
SOL-20
TABLE UNCLAMP
S-120
RELAY BOARD
CN301E
M44T
TB2
MACHINE SIDE
LS-72
LS-77
TB1
-DEC4
-INHRLS
*1. +24V.
T.U.
CN5-14
5-6
5-11
P.C.
CND 4-44
CND 2-10
(HOE-1)
(HOS-1)
X7I
X2F
X2I
4 AXIS HOME POSITION
INHIBIT READ LS (CLAMP:OPEN UNCLAMP: CLOSE)
*1. REMOVE JUMPER AND INSERT CONTACT, IF TABLE INHIBIT USED.
4 AXIS MOVEMNT TIME CHART
4 AXIS COMMAND (GXX4)
4 AXIS MOTION COMAND (MC4-N)
4 AXIS INTERLOCK (TT4-M)
4 AXIS SERVO OFF (SVF4-N)
4 AXIS UNCLAMP SOL (M44T)
4 AXIS UNCLAMP LS (INNRLS)
4 AXIS DUMMY LOAD CONNECTOR
DETECTING NO SIGNAL & MOTO OVERHEAT ALARM NEGLECT
33K 1/2W
10K 1/2W
MS3101A-20-29P
MS3101A-28-11P
DRAWING NO. 4243081453A
SHEET OF
INDEX NUMBER
SHEET
LINE
APPROVED
DESIGNED
DRAWN
Mazak
YAMAZAKI MAZAK CORPORATION
TITLE
VQC-15/40
NC TABLE (OPTION)
(TUSDAKOMA) 2PC
CONTROL MAZATROL
DRAWING NO. 4243081453A
SHEET 2 OF 2
SIZE 3

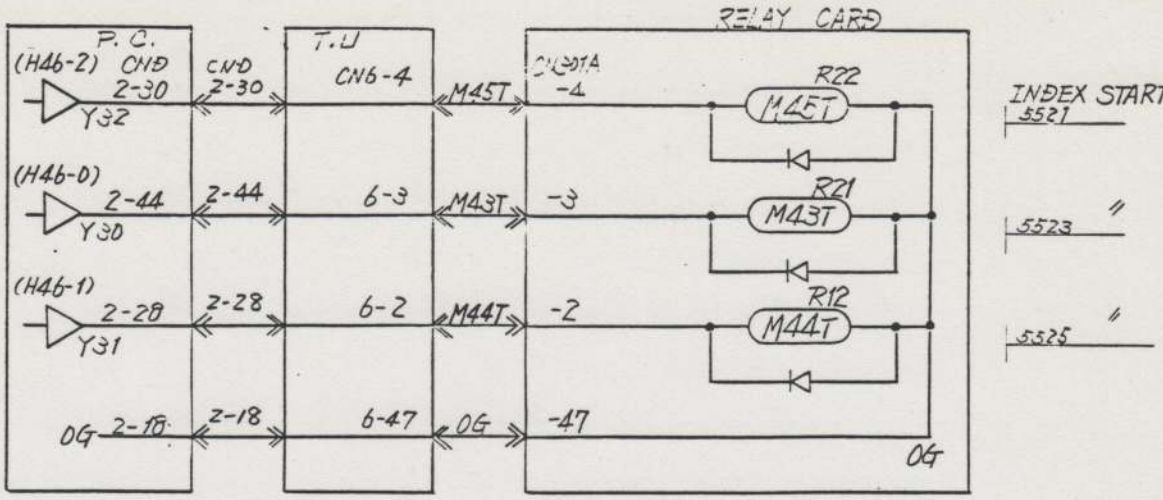
P. C.
(H46-2) CND
2-30
Y32
(H46-0)
2-44
Y30
(H46-1)
2-28
Y31
OG 2-18
CND
2-30
2-44
2-28
2-18
T.U
CN6-4
6-3
6-2
6-47
M45T
M43T
M44T
OG
RELAY CARD
-4
-3
-2
-47
R22
M45T
R21
M43T
R12
M44T
OG
INDEX START SIGNAL 1
5521
5523 〃 2
5525 〃 3

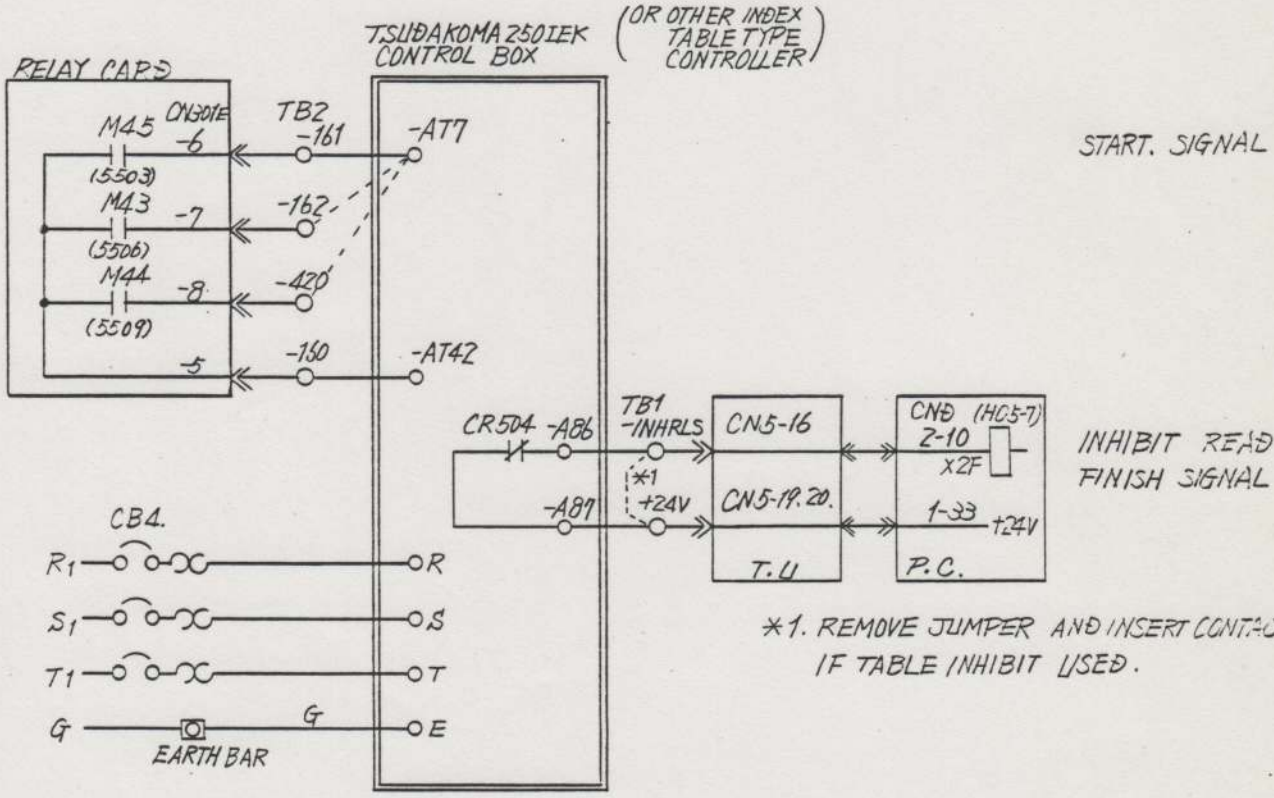
TSUDAKOMA 250IEK
CONTROL BOX
(OR OTHER INDEX TABLE TYPE CONTROLLER)
RELAY CARD
M45
(5503)
M43
(5506)
M44
(5509)
-6
-7
-8
-5
TB2
-161
-162
-420
-150
-AT7
-AT42
START. SIGNAL
CR504
-A86
-A87
TB1
-INHRLS
+24V
*1
CN5-16
CN5-19. 20.
T.U
CND (HC5-7)
2-10
X2F
1-33
+24V
P.C.
INHIBIT READ FINISH SIGNAL
CB4.
R1
S1
T1
G
EARTH BAR
R
S
T
E
*1. REMOVE JUMPER AND INSERT CONTACT. IF TABLE INHIBIT USED.

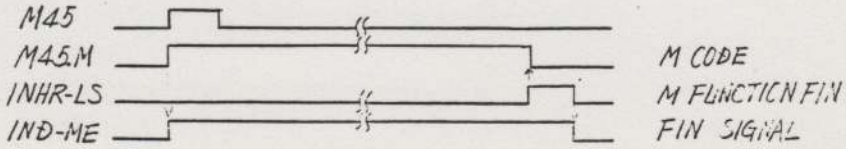
M45
M45.M
INHR-LS
IND-ME
M CODE
M FUNCTION FIN
FIN SIGNAL

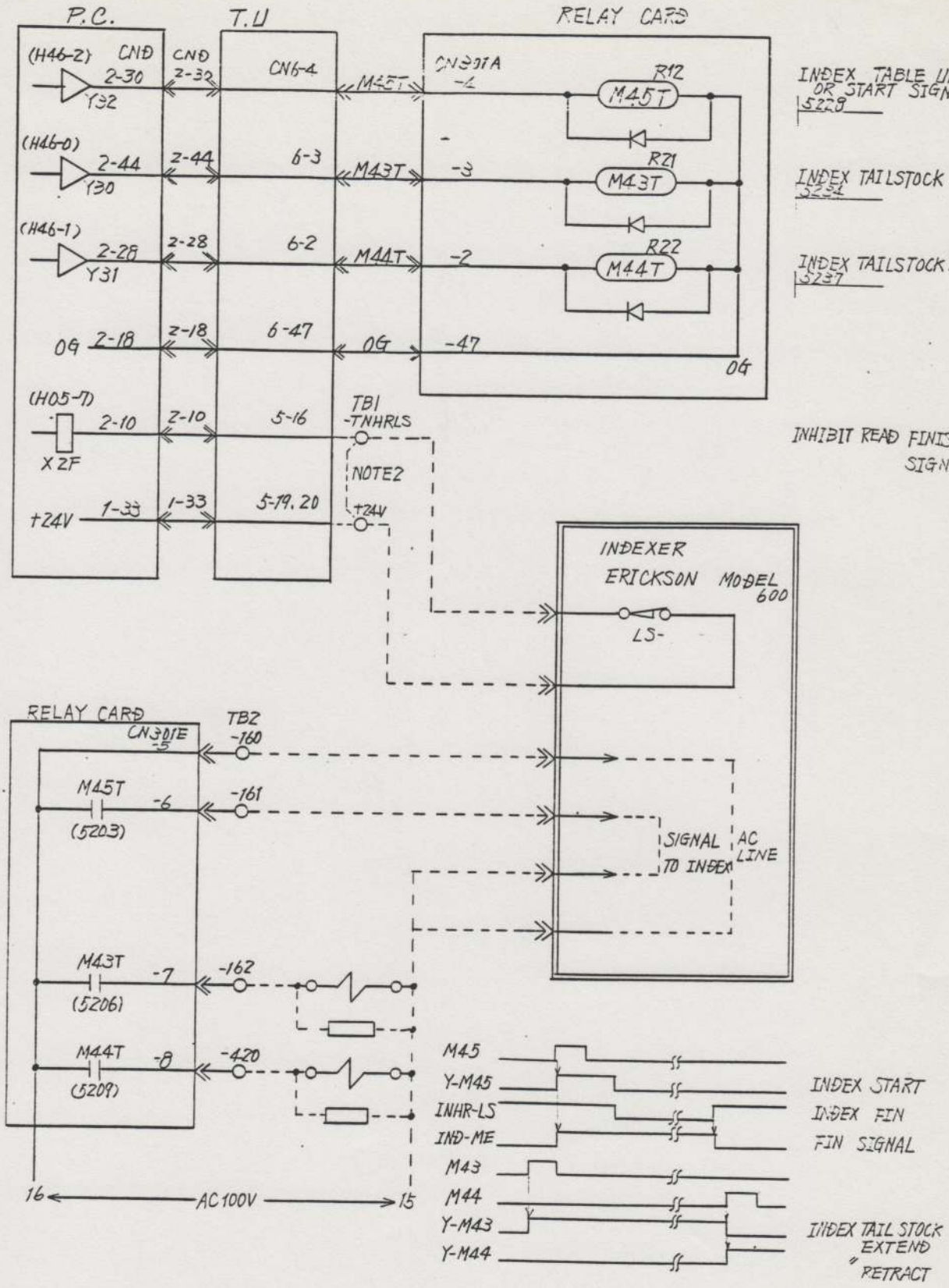

NOTES DASHED LINE TO BE ADDED AT CUSTOMER SIDE

<NOTE1> MAXIMUM BREAKING CAPACITY <CONTACT>

A.C. 110V. 4A (INDUCVCTIVE LOAD POWER FACTOR = 0.4)

A.C. 220V. 2A (do.)

<NOTE2> INSTALLED INDEXER. REMOVE WIRE BETWEEN +24V AND INHRLS

DRAWING NO. 4240481456

SHEET. OF.

INDEX NUMBER

SHEET 56 LINE

DRN. BY KIMURA DATE Oct.15.84

CHK'D BY DATE May 3.85

Mazak

YAMAZAKI MAZAK CORPORATION

TITLE VQC-15/40 ERICKSON INDEXER OPTION

CONTROL DRAWING NO. M2V

4240481456

SHEET. OF

SIZE A3

SHEET 56 LINE

INDEX NUMBER

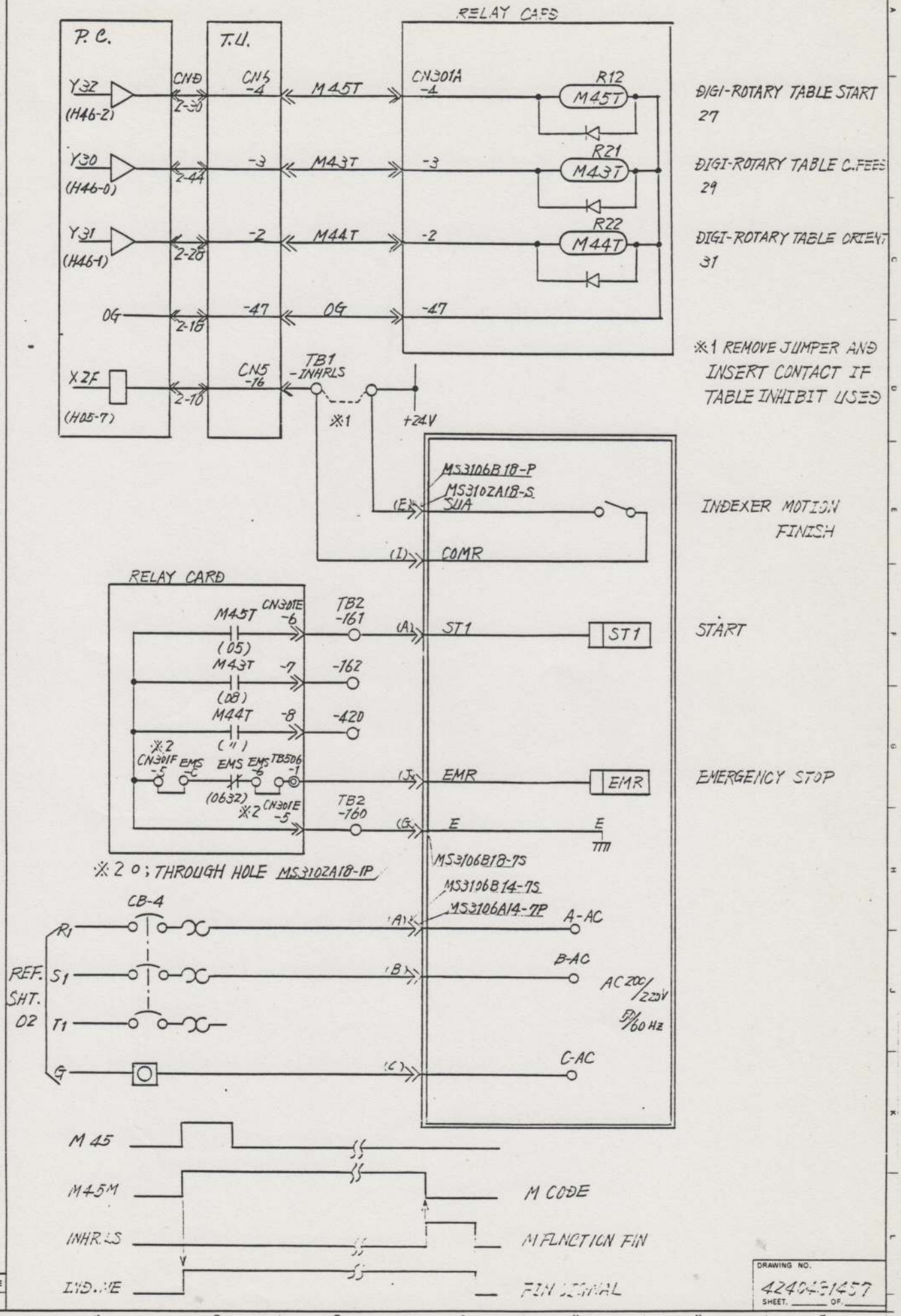

INDEX NUMBER
SHEET 57 LINE

DRN. BY K.Hirata DATE
CHK'D BY DATE

Mazak
YAMAZAKI MAZAK CORPORATION

TITLE VQC-15/40 NIKKIN DIGI ROTARY TABLE (INDEX TABLE)

CONTROL M2V
DRAWING NO. 424048457
SHEET. OF.
SIZE 3

SHEET 57 LINE
INDEX NUMBER

DRAWING NO. 424048457
SHEET. OF.

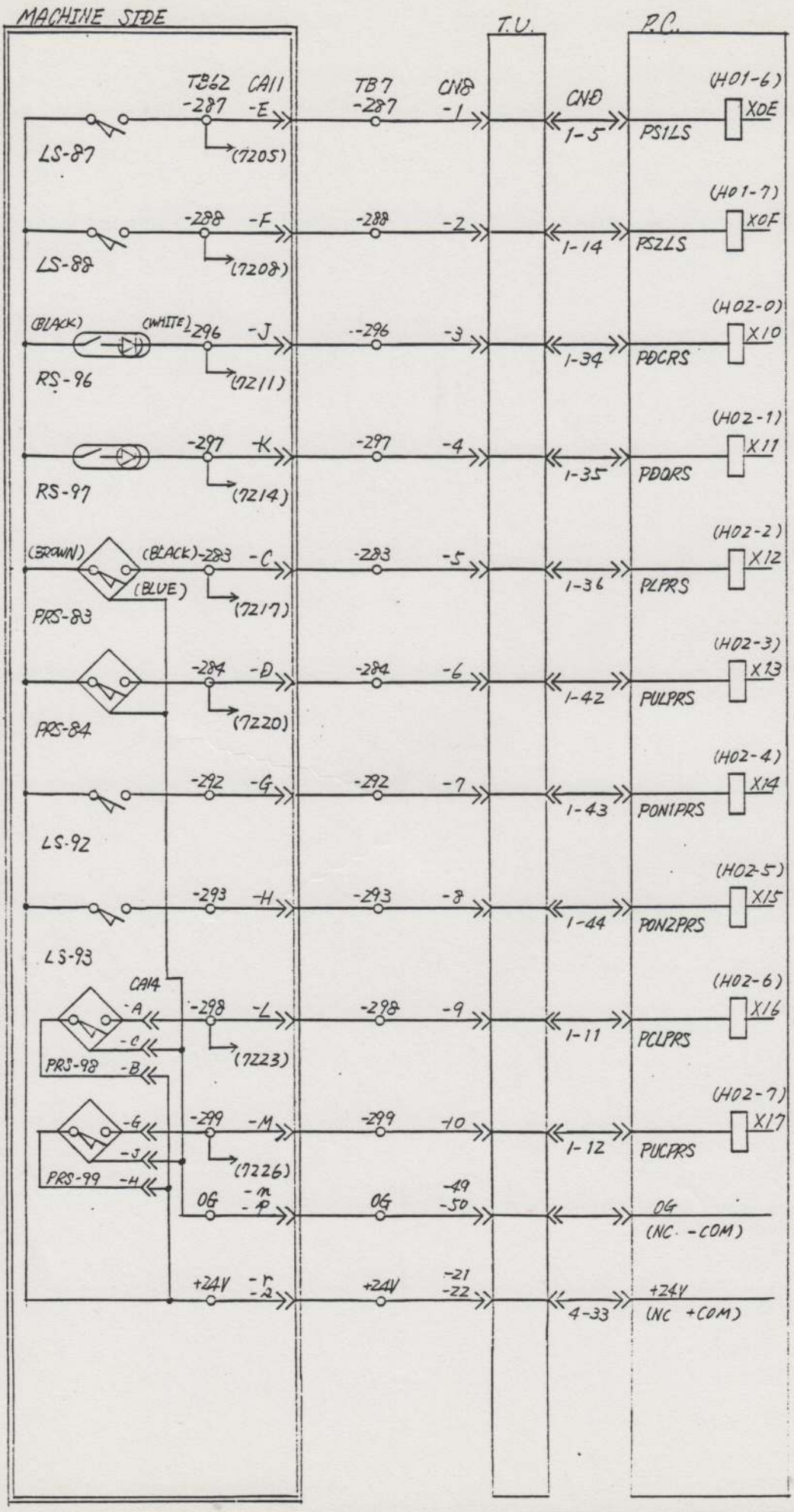
MACHINE SIDE
T.U.
P.C.
TB62 CA11
-287 -E
TB7 CN8
-287 -1
CN8
1-5
(H01-6)
X0E
PS1LS
PALLET SELECT NO.1 LS
LS-87
(7205)
-288 -F
-288 -2
1-14
(H01-7)
X0F
PS2LS
PALLET SELECT NO.2 LS
LS-88
(7208)
(BLACK)
(WHITE)
296 -J
-296 -3
1-34
(H02-0)
X10
PDCRS
PALLET DOOR CLOSE RS
RS-96
(7211)
-297 -K
-297 -4
1-35
(H02-1)
X11
PDORS
PALLET DOOR OPEN RS
RS-97
(7214)
(BROWN)
(BLACK)
-283 -C
-283 -5
1-36
(H02-2)
X12
PLPRS
PALLET LOAD PRS
(BLUE)
PRS-83
(7217)
-284 -D
-284 -6
1-42
(H02-3)
X13
PULPRS
PALLET UNLOAD PRS
PRS-84
(7220)
-292 -G
-292 -7
1-43
(H02-4)
X14
PON1PRS
PALLET ON STOCKER NO.1 PRS
LS-92
-293 -H
-293 -8
1-44
(H02-5)
X15
PON2PRS
PALLET ON STOCKER NO.2 PRS
LS-93
CA14
-A
-298 -L
-298 -9
1-11
(H02-6)
X16
PCLPRS
PALLET CLAMP PRS
-C
PRS-98 -B
(7223)
-G
-299 -M
-299 -10
1-12
(H02-7)
X17
PUCPRS
PALLET UNCLAMP PRS
-J
PRS-99 -H
(7226)
0G -n -p
0G -49 -50
0G (NC -COM)
+24V -r -2
+24V -21 -22
4-33
+24V (NC +COM)
DRAWING NO.
42416 81470
SHEET 1 OF 2
INDEX NUMBER
SHEET
LINE
DRN. BY
DATE
CHK'D BY
DATE
Mazak
YAMAZAKI MAZAK CORPORATION
TITLE
VQC-15/40 2PC
MOTION SWITCH INPUT
CONTROL
MZV
DRAWING NO.
42416 81470
SHEET 1 OF 2
SIZE
3

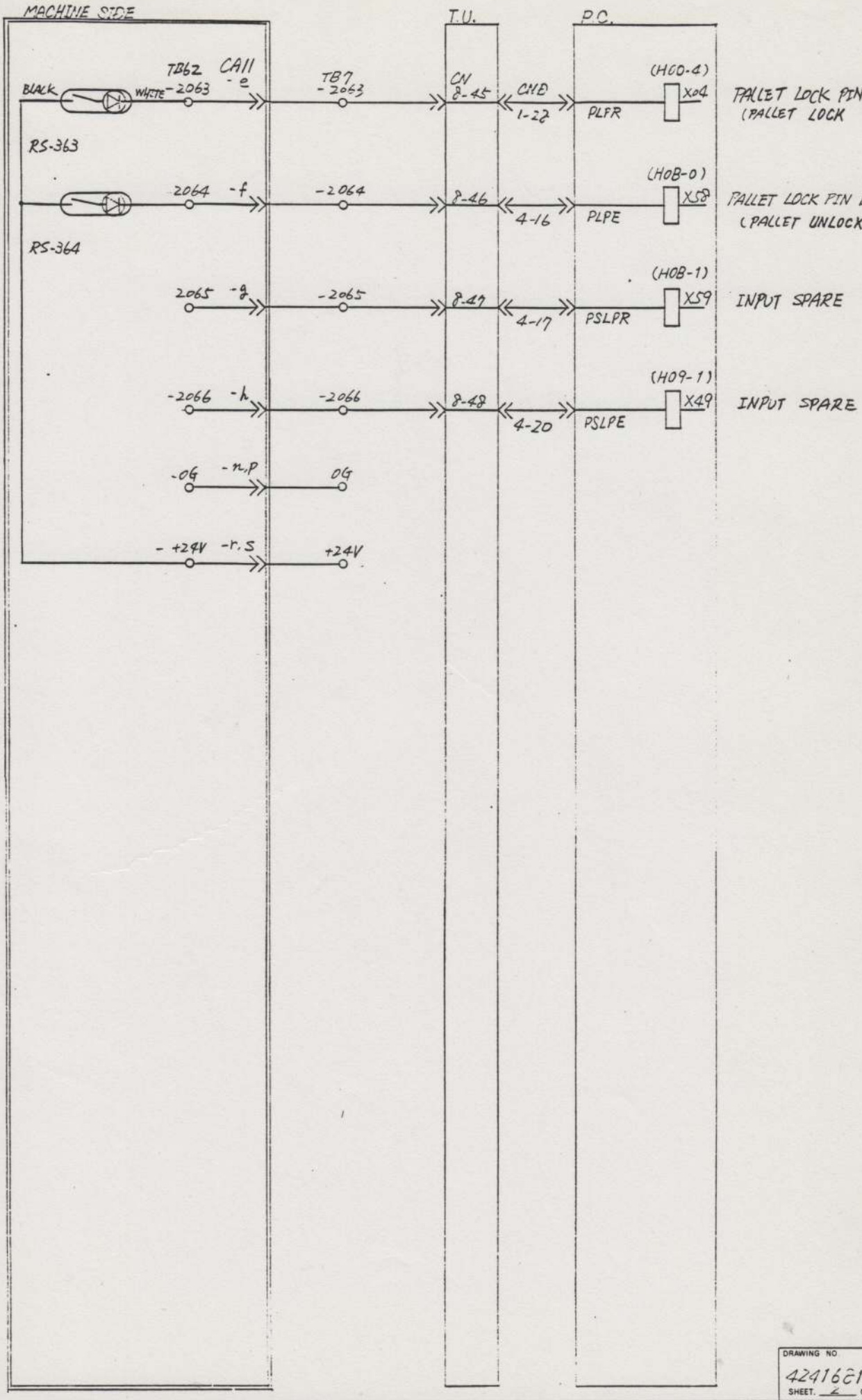

INDEX NUMBER

SHEET | LINE

DRN. BY K.Ishida DATE May 3 '95
CHK'D BY T.Ikeuchi DATE May 3 '95

Mazak
YAMAZAKI MAZAK CORPORATION

TITLE
VQC-15/40 2PC
MOTION SWITCH
INPUT (2)

CONTROL M2V
DRAWING NO. 42416 81470
SHEET 2 OF 2
SIZE 3

SHEET | LINE
INDEX NUMBER

DRAWING NO. 42416 81470
SHEET 2 OF 2

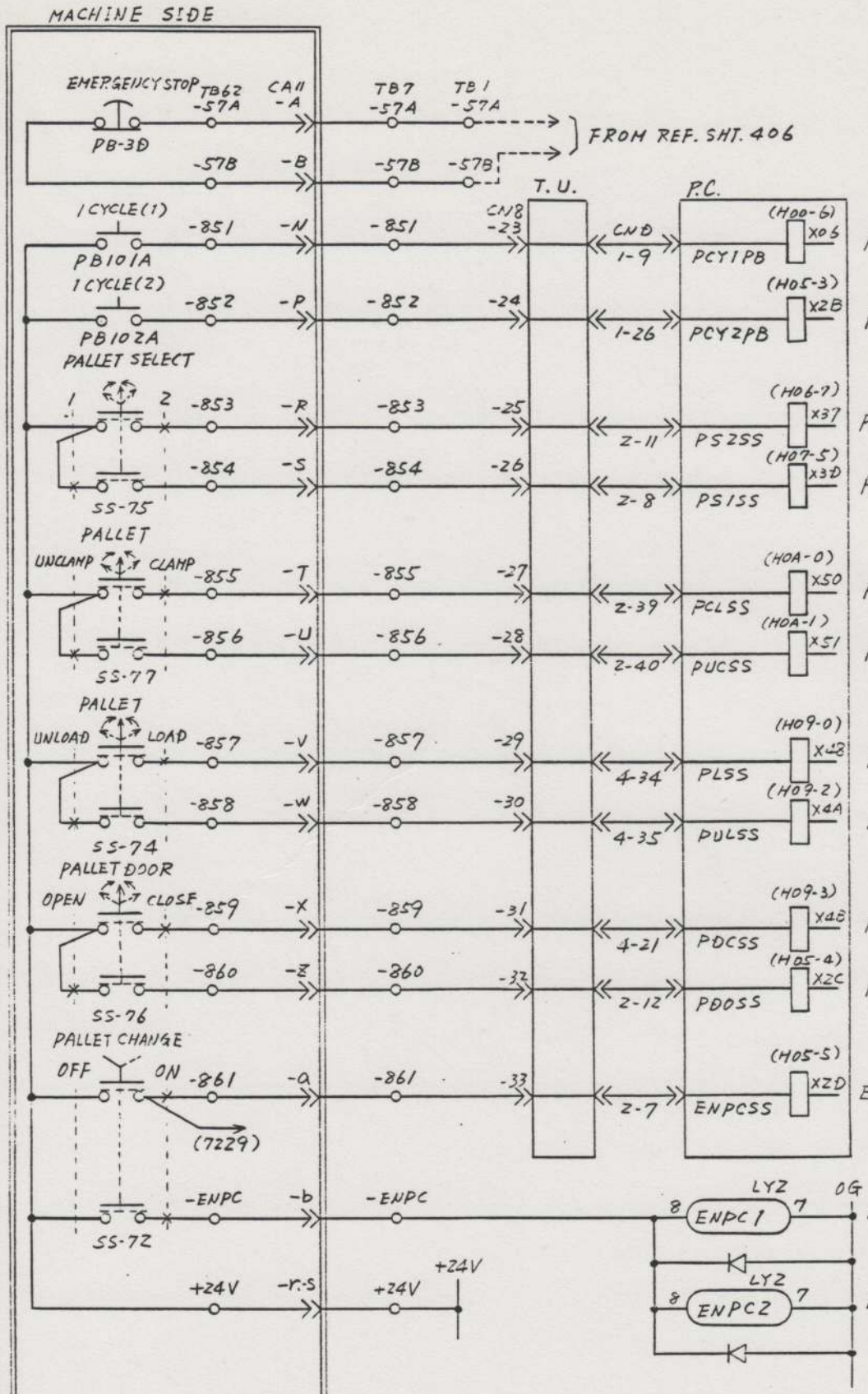

INDEX NUMBER

SHEET | LINE

DRN. BY K. MURAYA DATE May 3 '85
CHK'D BY HAT DATE May 1 '85

Mazak
YAMAZAKI MAZAK CORPORATION

TITLE VQC-15/40 2PC PALLET CHANGER INPUT

CONTROL MZV
DRAWING NO. 12416 81471
SHEET ____ OF ____
SIZE 3

SHEET | LINE
INDEX NUMBER

DRAWING NO. 12416 31471
SHEET ____ OF ____

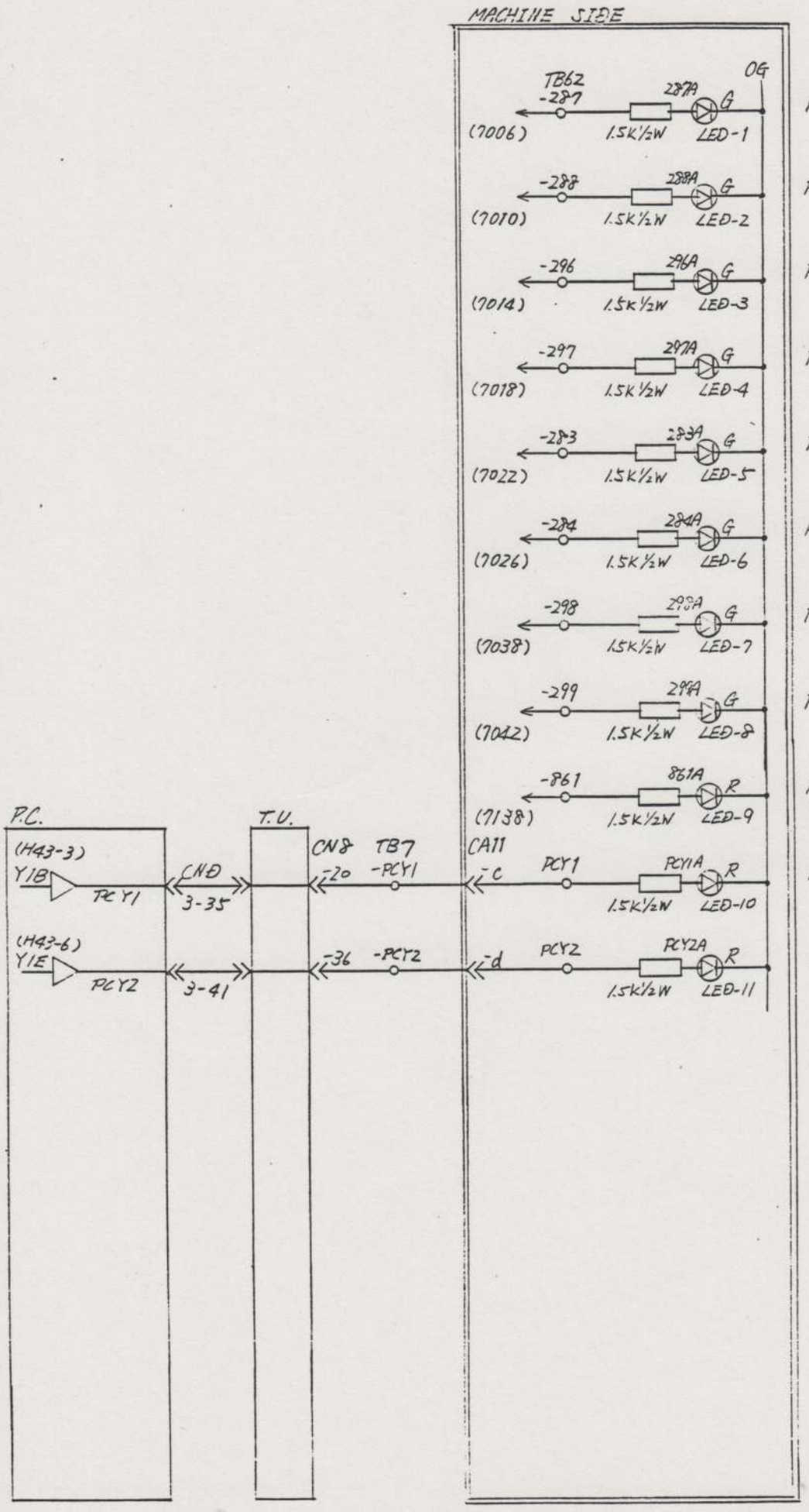

INDEX NUMBER

SHEET	LINE
	01
	02
	03
	04
	05
	06
	07
	08
	09
	10
	11
	12
	13
	14
	15
	16
	17
	18
	19
	20
	21
	22
	23
	24
	25
	26
	27
	28
	29
	30
	31
	32
	33
	34
	35
	36
	37
	38
	39
	40
	41
	42
	43
	44
	45
	46
	47
	48
	49
	50
	51
	52

DRN. BY K. Ishiguro DATE May 3 '85
CHK'D BY H.S. DATE May 3 '85

Mazak
YAMAZAKI MAZAK CORPORATION

TITLE
VGC-15/402 PC
OPERATING PANEL
INDICATER

CONTROL MZV
DRAWING NO. 42416 81472
SHEET 3 OF
SIZE

SHEET LINE
INDEX NUMBER

DRAWING NO. 42416 81472
SHEET ____ OF ____

MACHINE SIDE 10,000 r.p.m. OPTION OIL AIR LUBRICATOR UNIT

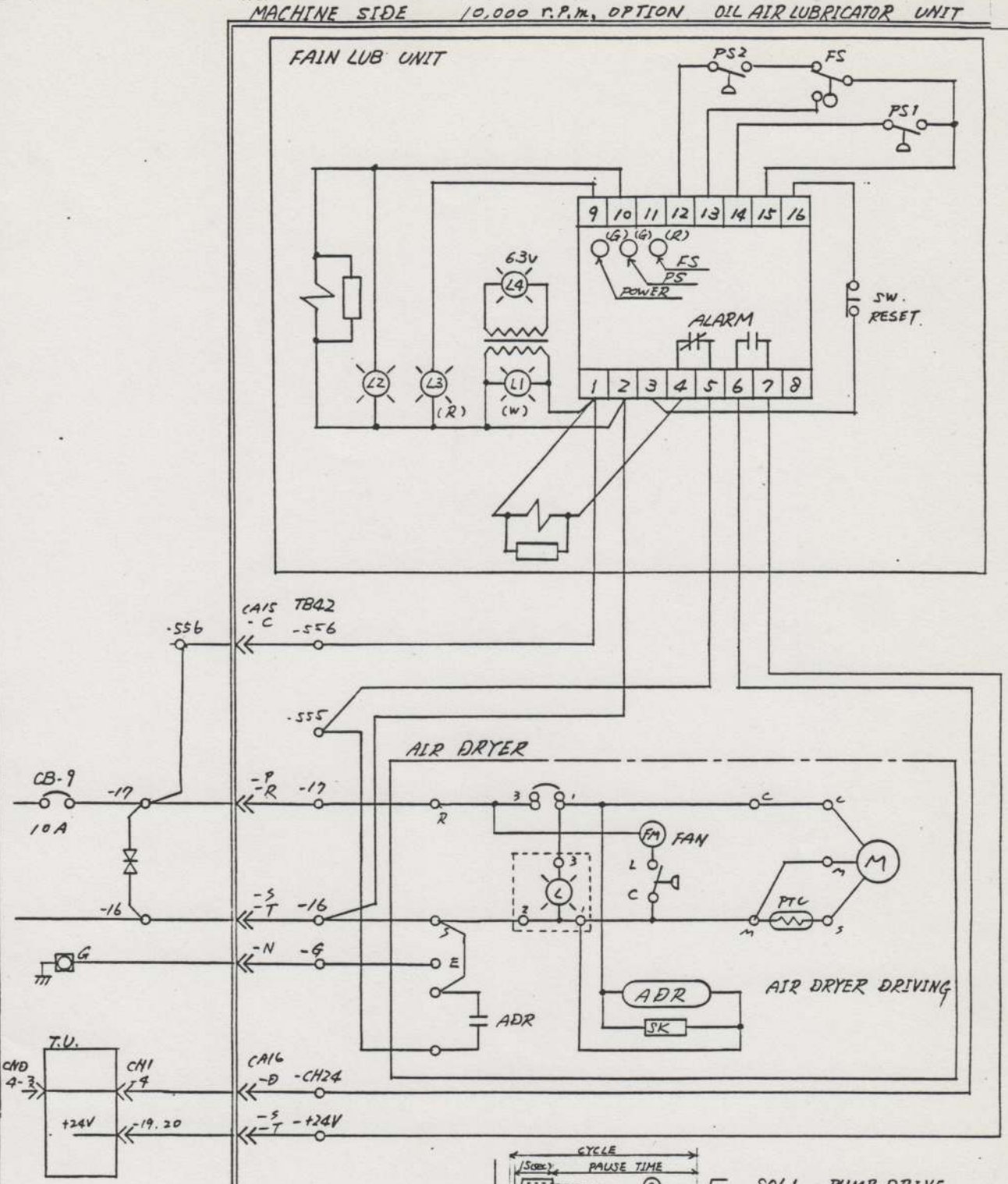

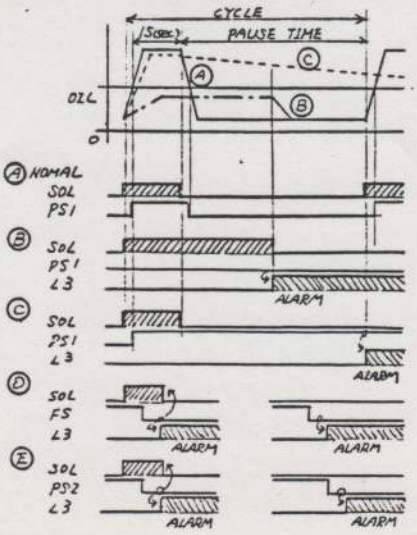

SOL1	PUMP DRIVE
SOL2	AIR THROUGH
PS1	OIL PRESSURE SWITCH
PS2	AIR PRESSURE SWITCH
FS	FLOAT SWITCH
SW	RESET SWITCH
L1	POWER ON LUMP
L2	WORKING LUMP
L3	LUBE ALARM LUMP
L4	LUMP

INDEX NUMBER

SHEET | LINE

APPROVED: h. hr.

DESIGNED: K. Ra.

DRAWN:

Mazak
YAMAZAKI MAZAK CORPORATION

TITLE: VAC/S/40 OIL AIR UNIT (10,000 r.p.m. OPTION)

CONTROL: MAZATROL

DRAWING NO.: 4243081480

SHEET: OF:

SIZE: 3

SHEET | LINE

INDEX NUMBER

DRAWING NO. 4243081480

SHEET OF

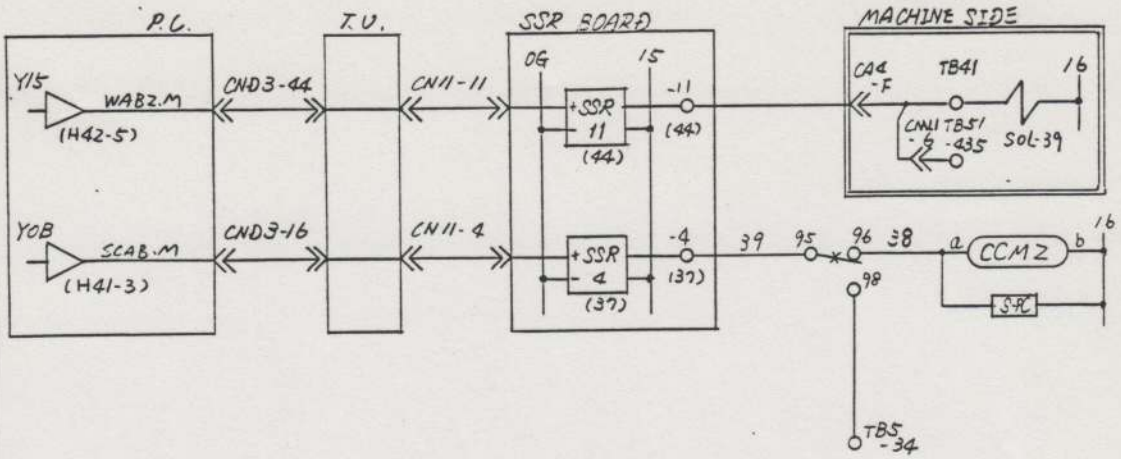

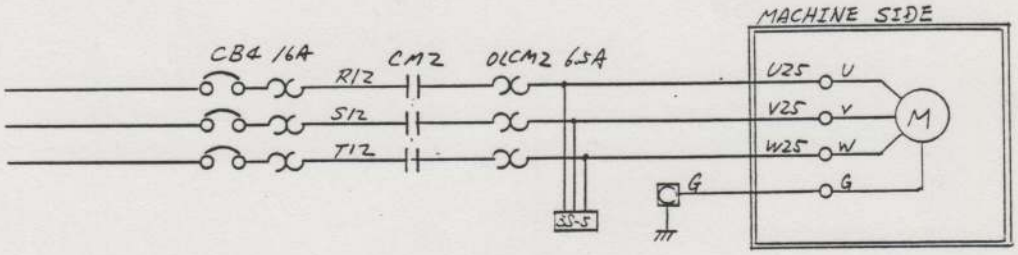

INDEX NUMBER

SHEET | LINE

APPROVED

DESIGNED 86.3.22

DRAWN 86.3.22

MAZAK
YAMAZAKI MAZAK CORPORATION

TITLE VQC-15/40
LARGE CAPACITY COOLANT SYSTEM (OPTION)

CONTROL M2 V

DRAWING NO. 424168148 1

SHEET 3 OF

SIZE

SHEET | LINE

INDEX NUMBER

DRAWING NO. 424168148 1

SHEET ____ OF ____

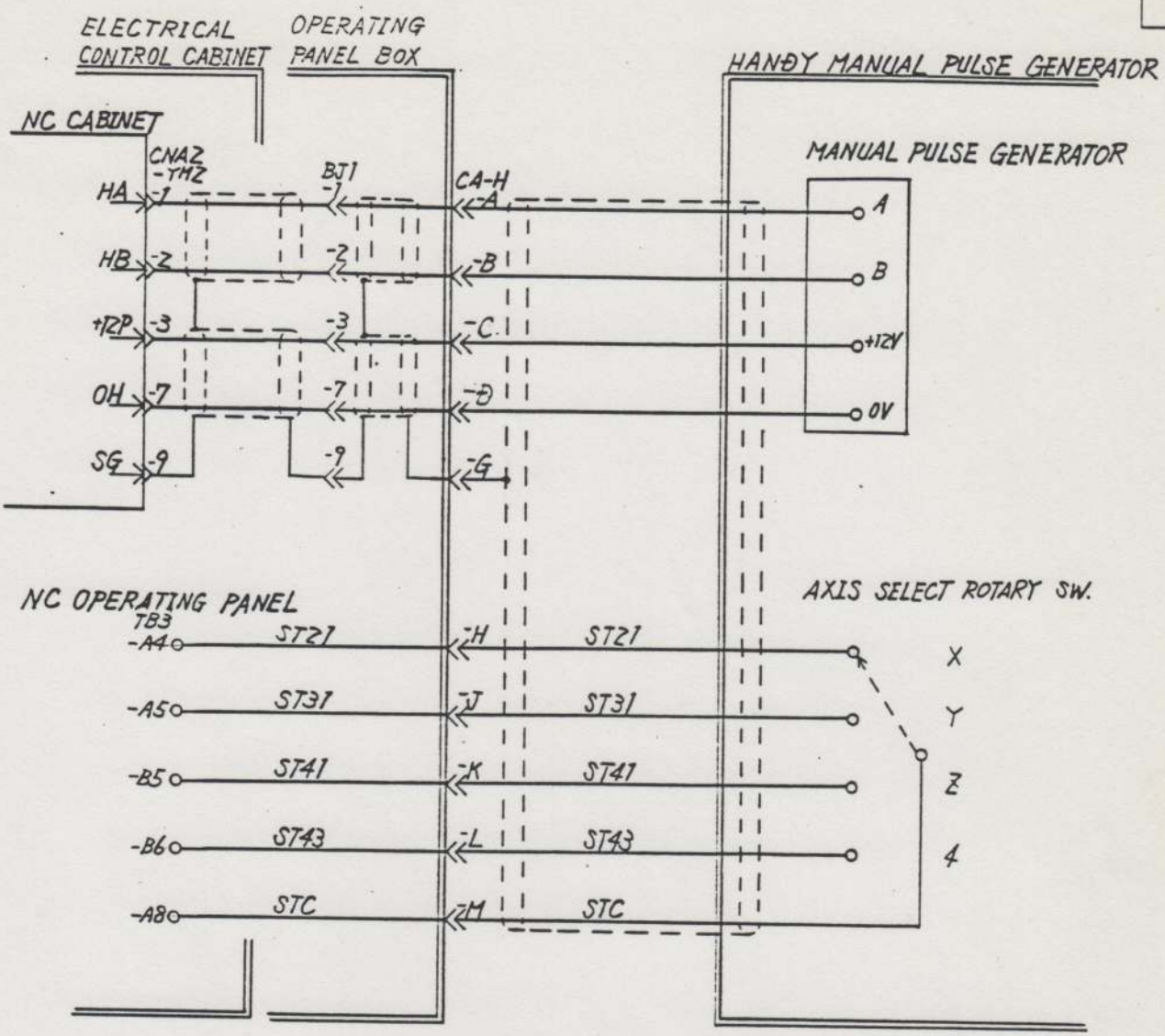

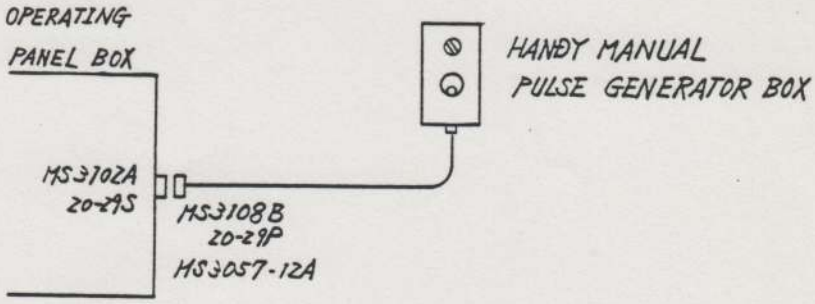

DRAWING NO. 4241681485 SHEET 1 OF 2

INDEX NUMBER SHEET LINE

DRN. BY V.O.Hirsch DATE 17-86
CHK'D BY DATE

Mazak YAMAZAKI MAZAK CORPORATION

TITLE VQC-15/40 HANDY PULSE GENERATOR BOX CONNECTION

CONTROL MAZATROL DRAWING NO. 4241681485 SHEET 1 OF 2 SIZE 3

SHEET LINE INDEX NUMBER

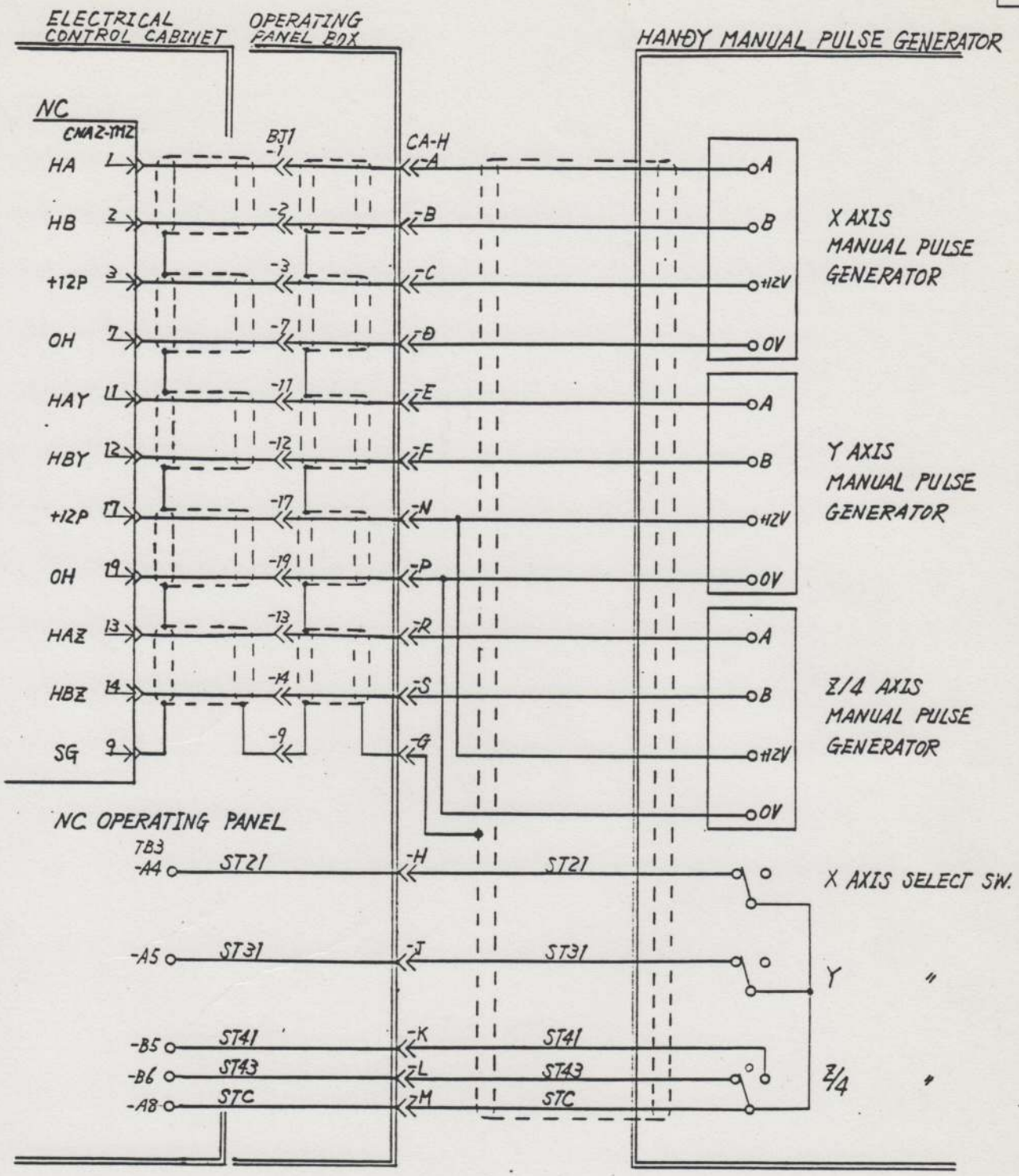

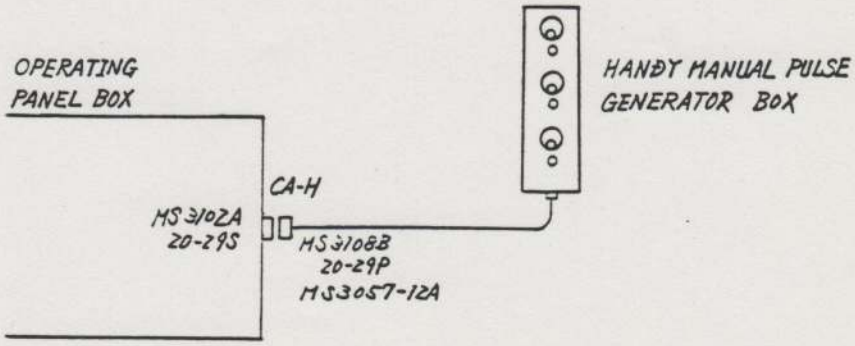

INDEX NUMBER | SHEET | LINE

DRN. BY V. Chuda DATE Mar 17 '86
CHK'D BY T. Hirai DATE

Mazak
YAMAZAKI MAZAK CORPORATION

TITLE VQC-15/40 HANDY PULSE GENERATOR BOX (OPTION) (2)

CONTROL MAZATROL
DRAWING NO. 4241681485
SHEET 2 OF 2
SIZE 3

DRAWING NO. 4241681485
SHEET 2 OF 2

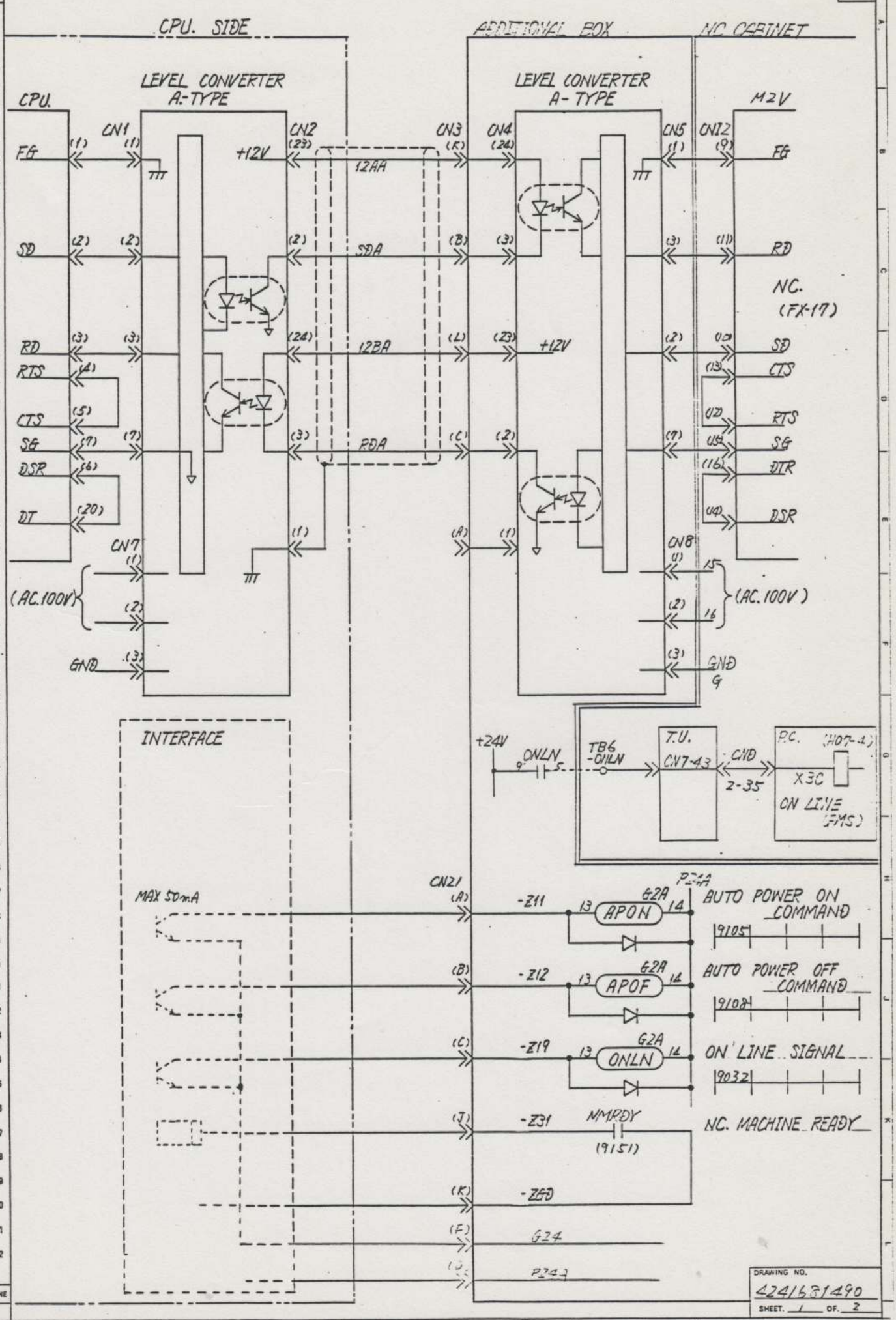

INDEX NUMBER

SHEET | LINE

DRN. BY
DATE
CHK'D BY
DATE

Mazak
YAMAZAKI MAZAK CORPORATION

TITLE VQC-15/40 DNC CONNECTION (OPTION) (P-TYPE)

CONTROL M2V

DRAWING NO. 424168149 0

SHEET 1 OF 2

SIZE 3

SHEET | LINE

INDEX NUMBER

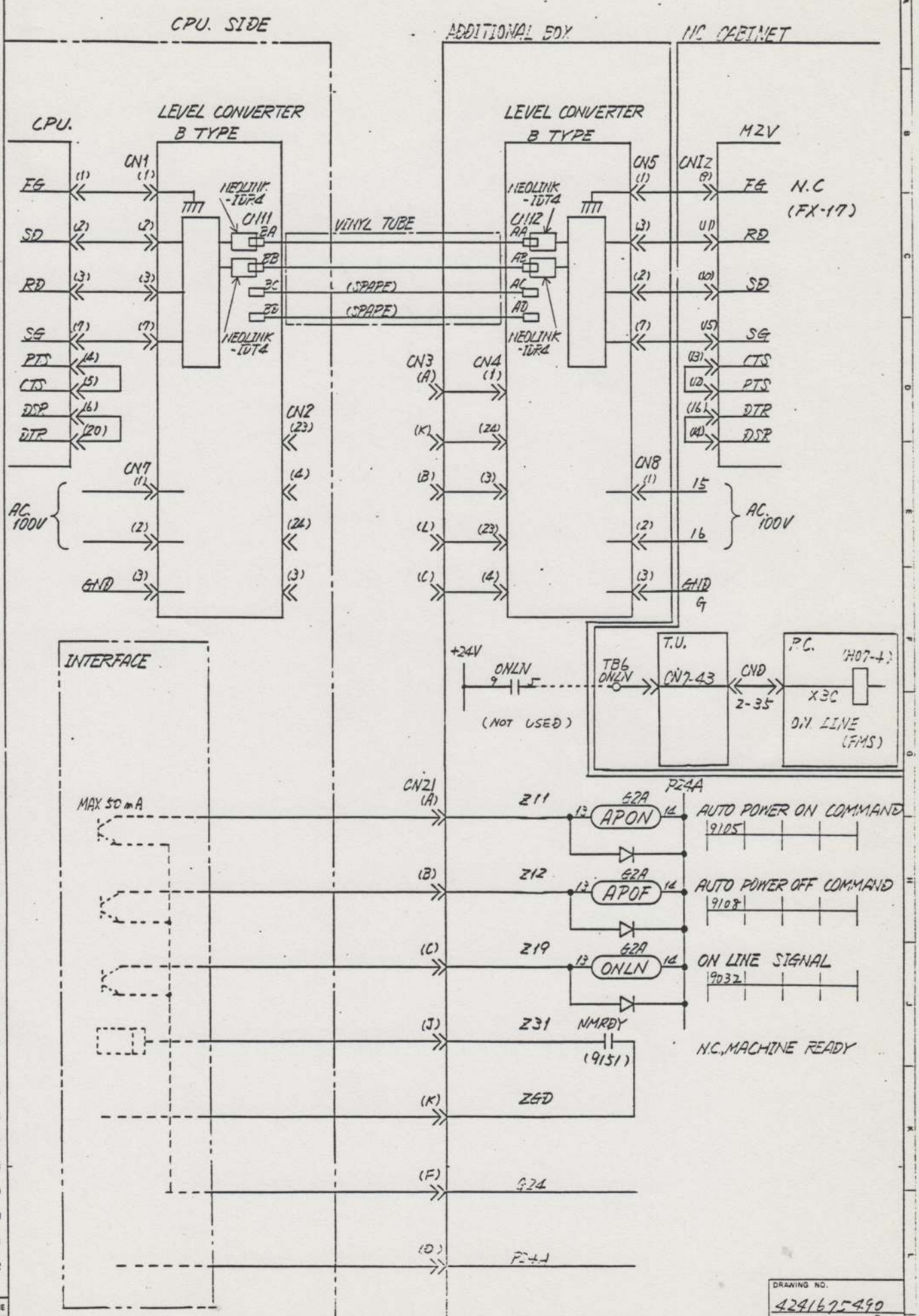

INDEX NUMBER

SHEET | LINE

DRN. BY
DATE
CHK'D BY
DATE

Mazak
YAMAZAKI MAZAK CORPORATION

TITLE
VQC-15/40
DNC CONNECTION
(CONT'D) (B-TYPE)

CONTROL
M2V

DRAWING NO.
4241681490

SHEET 3

SIZE

SHEET | LINE

INDEX NUMBER

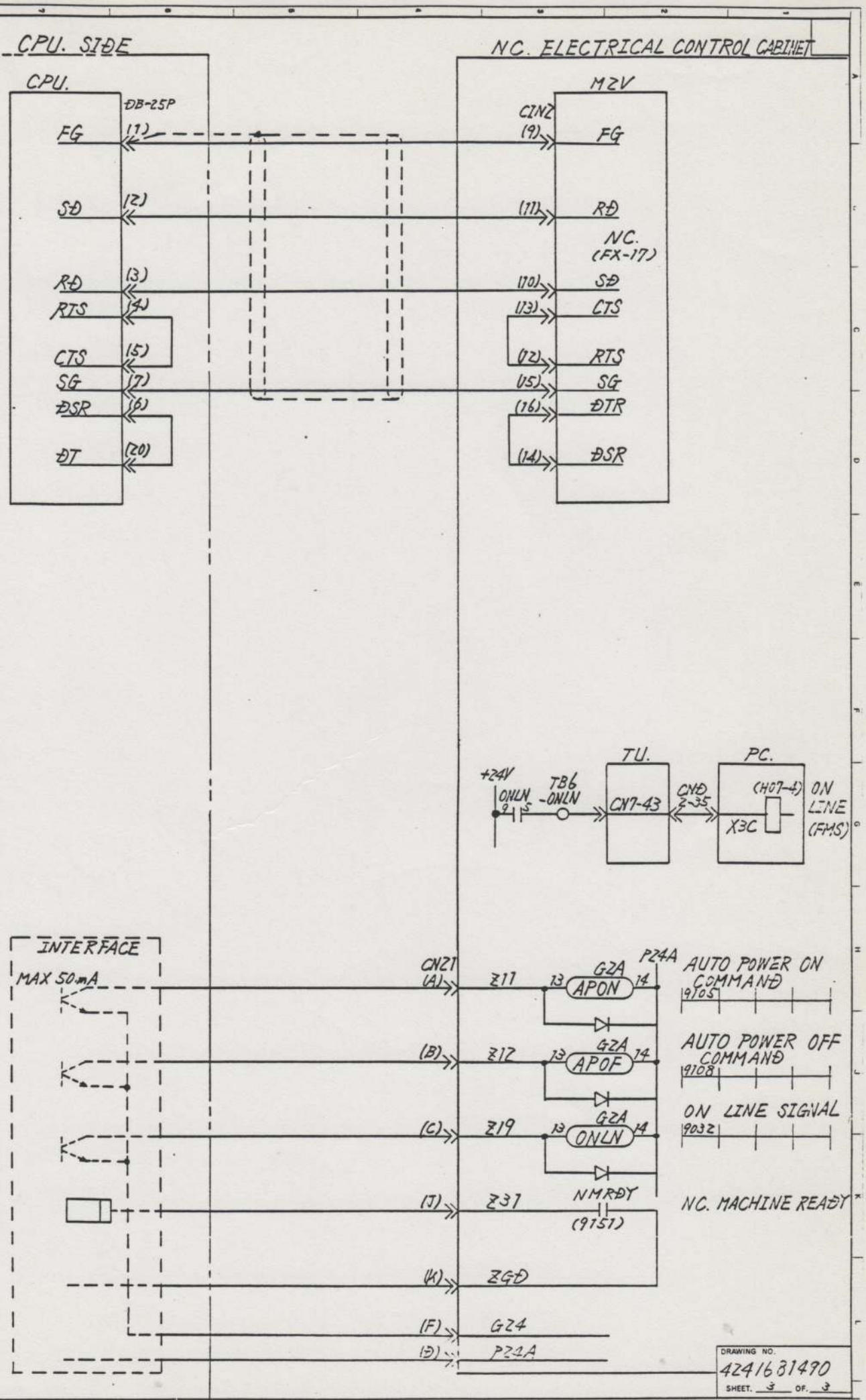

INDEX NUMBER

SHEET | LINE

DRN. BY Y. Ikeda DATE Nov 19. '85

CHK'D BY ____ DATE ____

Mazak
YAMAZAKI MAZAK CORPORATION

TITLE VQC-15/40 DNC CONNECTION (OPTION) (C TYPE)

CONTROL M2V

DRAWING NO. 4241681490

SHEET. 3 OF. 3

SIZE 3

SHEET | LINE

INDEX NUMBER

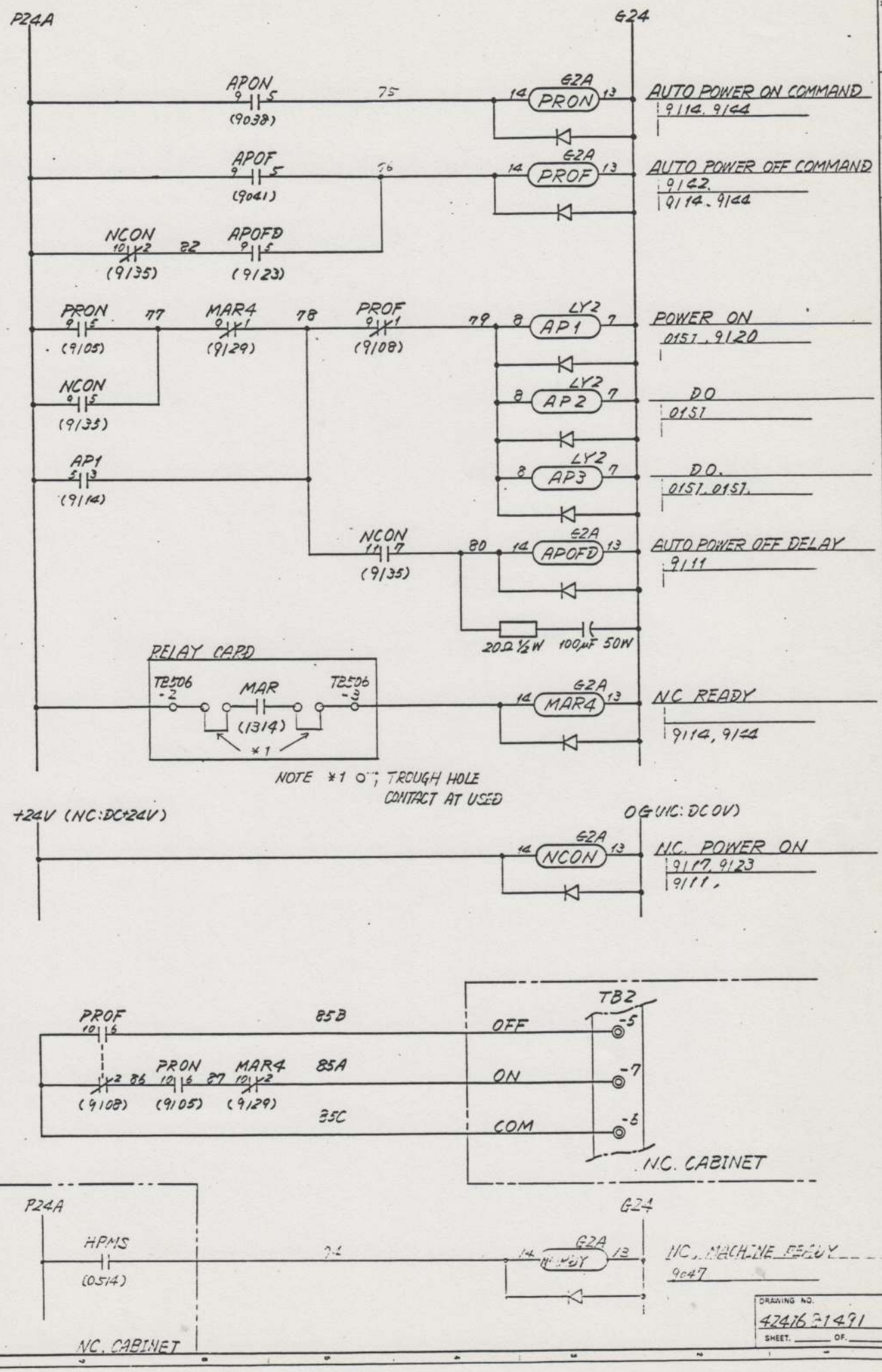

INDEX NUMBER
SHEET
LINE

DRN. BY K.Hirata
DATE 1988.9.1
CHK'D BY H. H.
DATE 1988.9.5

Mazak
YAMAZAKI MAZAK CORPORATION

TITLE
VQC-15/40
AUTO POWER ON OFF CONTROL (0411(N))

CONTROL MZV
DRAWING NO. 42416 81491
SHEET 3 OF
SIZE

DRAWING NO. 42416 81491
SHEET OF

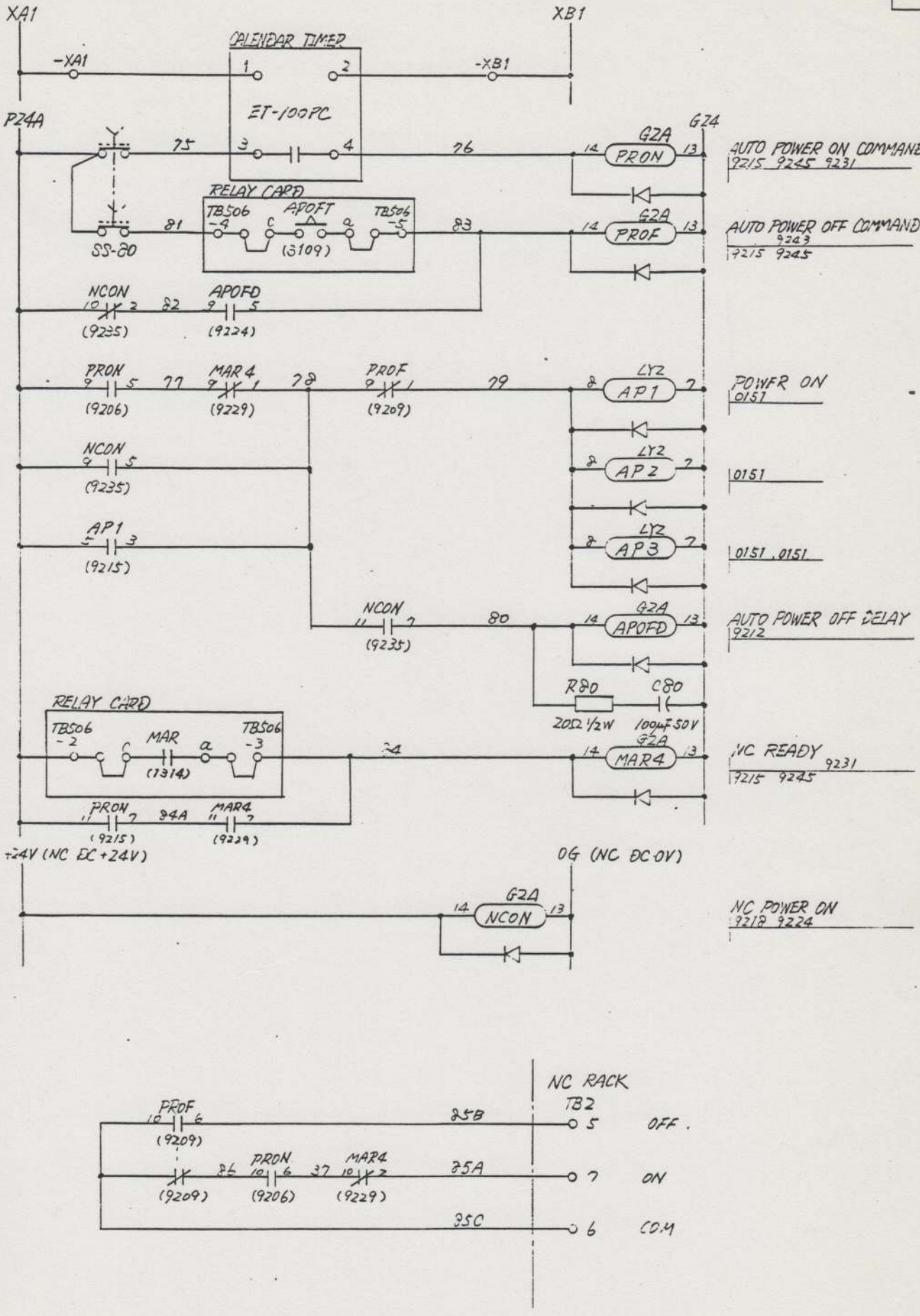

INDEX NUMBER

SHEET | LINE

DRN. BY K. Ishiro DATE May 3, 85
CHK'D BY DATE May 3, 85

Mazak
YAMAZAKI MAZAK CORPORATION

TITLE
VQC-15/40
AUTO POWER ON/OFF (B)
COMMAND TIMP (PRON)

CONTROL M2V
DRAWING NO. 4241681492
SHEET. OF.
SIZE 3

SHEET | LINE

INDEX NUMBER

ELEMENTARY DIAGRAM LIST

SHEET	TITLE	DRAWING NO.
01	CONTROL PANEL LAYOUT	42416 81701
04	CONTROL PANEL PART LIST	42413 81704
10	2 PALLET CHANGER CONTROL PANEL LAYOUT	42416 81710

DRAWING NO. 42416 81700
SHEET ____ OF ____

DWN. BY K.Kikuzawa
DATE May 2. '85
CHK'D BY H.S.
DATE May. '85

Mazak
YAMAZAKI MAZAK CORPORATION

TITLE VQC-15/40 CONTROL PANEL LAYOUT

CONTROL MZV
DRAWING NO. 42416 81700
SHEET ____ OF ____
SIZE 3

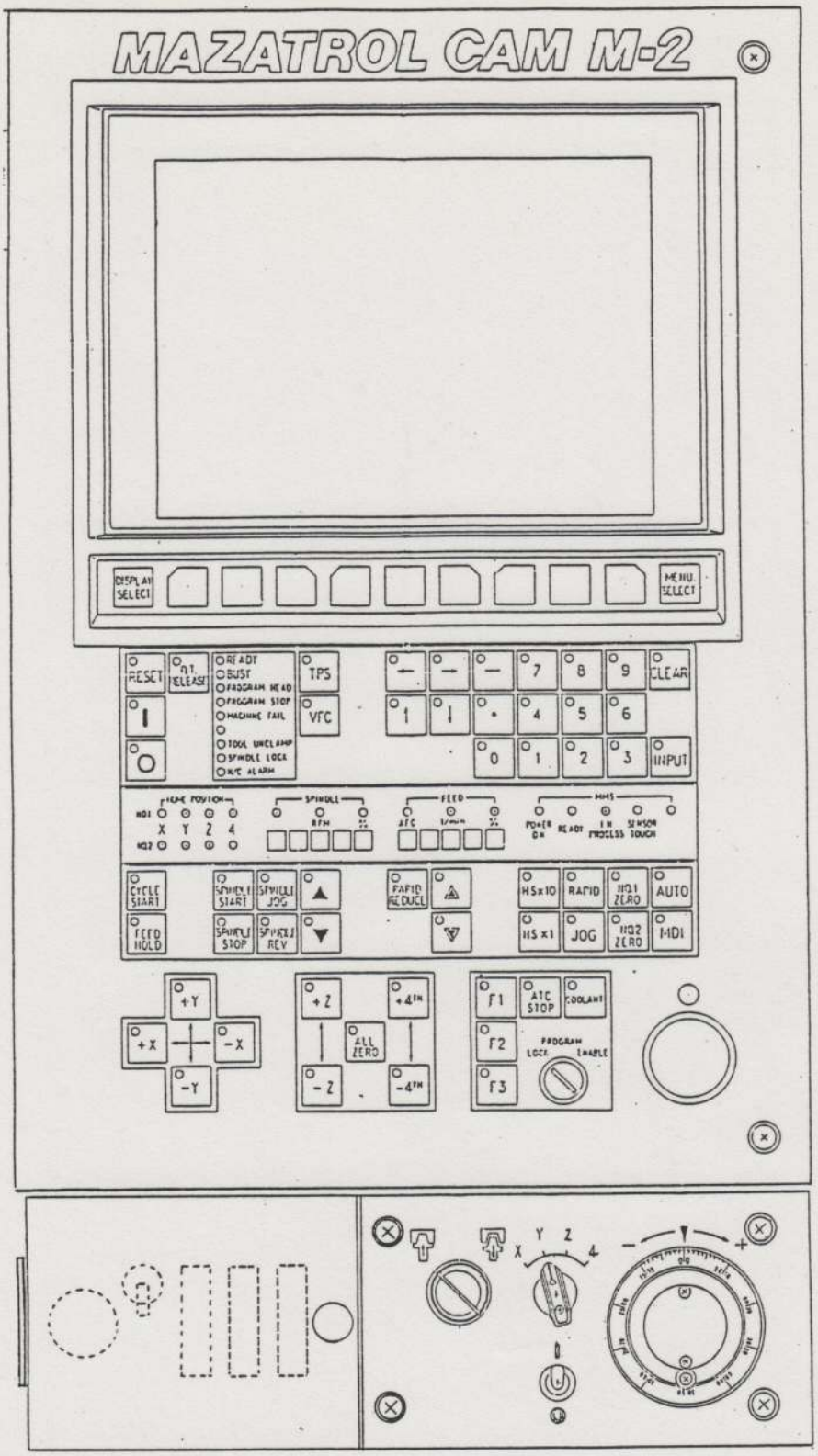

INDEX NUMBER

SHEET	LINE
	01
	02
	03
	04
	05
	06
	07
	08
	09
	10
	11
	12
	13
	14
	15
	16
	17
	18
	19
	20
	21
	22
	23
	24
	25
	26
	27
	28
	29
	30
	31
	32
	33
	34
	35
	36
	37
	38
	39
	40
	41
	42
	43
	44
	45
	46
	47
	48
	49
	50
	51
	52

DRN. BY K. Nakano DATE Oct. 18 '84
CHK'D BY H.J. DATE May 2 '85

株式会社 山崎鉄工所
YAMAZAKI MACHINERY WORKS, LTD.

TITLE VQC-15/40 CONTROL PANEL LAYOUT

CONTROL MZV
DRAWING NO. 4240431701
SHEET OF
SIZE 3

SHEET | LINE
INDEX NUMBER

DRAWING NO. 4240431701
SHEET OF

MAZATROL M-1, M-2 OPERATING BOARD PARTS LIST

NO.	PARTS NAME	TYPE	MAKER.	YAMAZAKI PARTS NO.
1	EMERGENCY STOP	RCA470-VR1	FUJI	D15FA000070
2	TOGGLE SW. (AXIS SELECT)	S-302	NICHIKAI	D17NB000260
3				
4	TOGGLE SW. CAP.	AT-402	NICHIKAI	D17NB000190
5	KEY (MEMORY PROTECT)	TTL-00236	TOCHIGIYA	D15MA001480
6	MANUAL PULSE GENERATOR	HD-52A	MITSUBISHI	
7	SHEET-KEY P.C.B	KS-YZ14B-1 (JAPAN)	MITSUBISHI	D65MA001420
		-2 (ENGLISH)	MITSUBISHI	D65MA001430
		-3 (SINBOL)	MITSUBISHI	D65MA001440
		KS-YZ15A-1 (JAPAN)	MITSUBISHI	D65MA001450
		-2 (ENGLISH)	MITSUBISHI	D65MA001460
		-3 (SINBOL)	MITSUBISHI	D65MA001470
8	ROTARY SW. (AXIS SELECT)	RS500NA-2-2-4-30-L16	TOSOKU	
9	SWITCH KNOB (AXIS SELECT)	R-ANTR60A	TOSOKU	
10	KEY SW. (TOOL CLAMP/UNCLAMP)	AH25-JZA-10B	FUJI	

INDEX NUMBER
SHEET LINE

DRN. BY K.Nakajima DATE May 3 '85
CHK'D BY H.S DATE May 1 '85

Mazak
YAMAZAKI MAZAK CORPORATION

TITLE V60C-15140 CONTROL PANEL PART LIST

CONTROL M2V
DRAWING NO. 4241381704
SHEET 3 OF
SIZE 3

SHEET LINE
INDEX NUMBER

DRAWING NO. 4241381704
SHEET OF

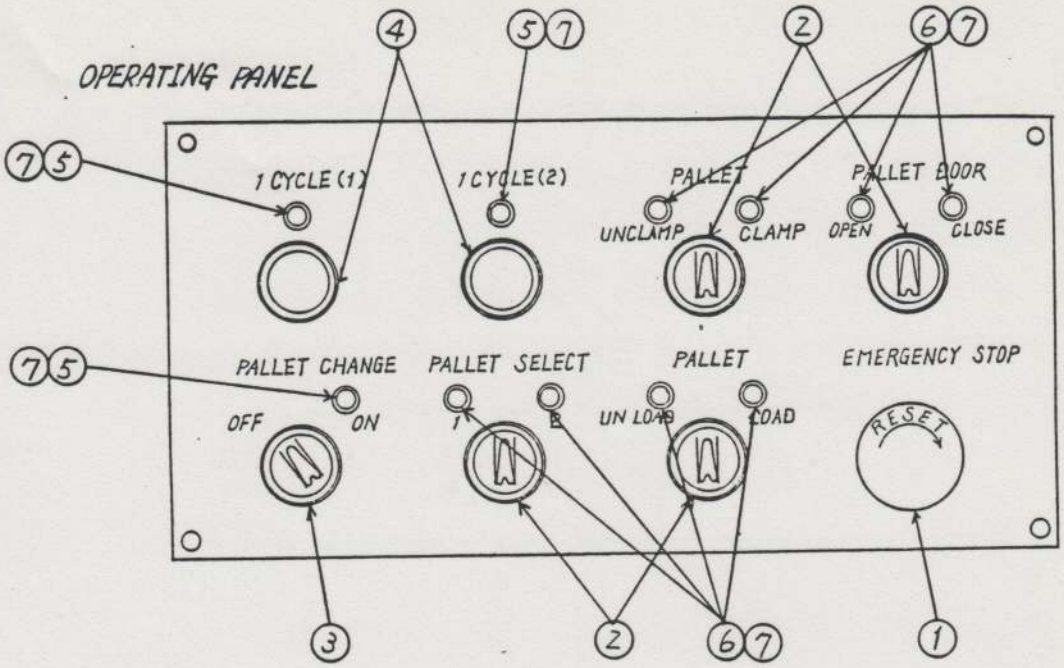

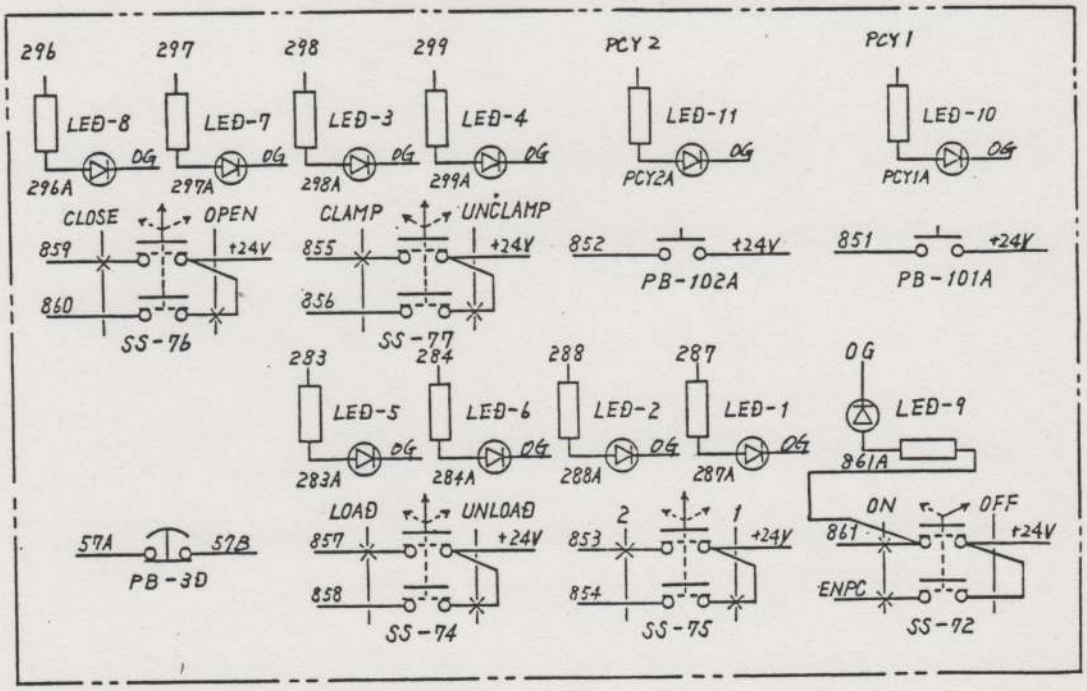

	CATALOG NO.	PART NO.
1	RC-470-VR1	D51FA000070
2	AH25-P1B	D13FA000420
3	AH25-P2B22	D13FA000360
4	AH25-FB11	D15FA000311
5	BD-1401R	D21PA000040
6	BD-1402G	D21PA000050
7	ERC-1G 1.5kΩ 1/2W	D30MB001110

INDEX NUMBER
SHEET
LINE

DRW. BY K.Hagiwara DATE 1.10.85
CHK'D BY HS DATE

Mazak
YAMAZAKI MAZAK CORPORATION

TITLE
VQC-1540 2PC
2 PALLET CHANGER
CONTROL PANEL LAYOUT

CONTROL M2V
DRAWING NO. 4241681710
SHEET ___ OF ___
SIZE 3

SHEET
LINE
INDEX NUMBER

DRAWING NO. 4241681710
SHEET ___ OF ___

*** [X] ELEMENT LIST ***

1	X000	[*ESP.M]	EMERGENCY STOP 2113 2302 2305 3001 4104 6004 7601 7602 7603
2	X001	[SZS.M]	SPINDLE ZERO SPEED 2303 *2512 2802 2901 4504 5308 *5407 7402
3	X002	[FA]	SPINDLE COMTROLLER NORMAL *5504 *5702
4	X003	[ORA1]	ORIENT ARRIVAL 2807 *4801 5408
5	X004	[PULKRS]	PALLET UNLOCK RS *9211 9212
6	X005	[MGTDPRS]	MAGAZINE TOOL DITECT PRS *5902 7106 7207
7	X006	[PCY1PB]	PALLET 1 CYCLE PB 9301 *9301 9302 9303
8	X007	[TSPB]	MANUAL TOOL SELECT 3001 *3211
9	X008	[T11P.M]	MAGAZINE BCD 11 3002
10	X009	[T12P.M]	MAGAZINE BCD 12 3003
11	X00A	[T14P.M]	MAGAZINE BCD 14 3004
12	X00B	[T18P.M]	MAGAZINE BCD 18 3005
13	X00C	[T21P.M]	MAGAZINE BCD 21 3006
14	X00D	[MIPRS]	MAGAZINE INPOSITION PRS 3007 3010 3012 3101 *3211
15	X00E	[PS1LS]	PALLET STATION 1 LS 9209 *9210 *9301 9303
16	X00F	[PS2LS]	PALLET STATION 2 LS *9209 9210 9301 *9303
17	X010	[PDCPRS]	PALLET DOOR CLOSE RS *9205 9206
18	X011	[PDORS]	PALLET DOOR OPEN RS 9205 *9206
19	X012	[PLPRS]	PALLET LOAD PRS 9203 *9204
20	X013	[PULPRS]	PALLET UNLOAD PRS *9203 9204

DRN. BY. K.MIURA	TITLE.	CONTROL.
DATE. 1.31.1986	VQC15/40	MAZATROL CAM M-2
CHK'D BY. T.HIRATA	YM2B453G	DRAWING NO.
DATE. 1.31.1986		42416818016
APPR'D BY. M.MURASE	SEQUENCE DIAGRAM	
DATE. 1.31.1986		SHEET. 1 OF. 103

REV.	DATE.	NAME.

YAMAZAKI MAZAK CORPORATION

*** [X] ELEMENT LIST ***

1	X014	[PON1PRS]	PALLET ON LOADING POSITION #9109 #9202 9301 9303 #9501 9501 #9505 #9606 9701
2	X015	[PON2PRS]	PALLET ON UNLOADING POSITION #9109 #9606 9701
3	X016	[PCLPRS]	PALLET CLAMP PRS 5304 #5305 9207 #9208
4	X017	[PUCPRS]	PALLET UNCLAMP PRS 5306 #5307 #9207 9208
5	X018	[TCPRS]	TOOL CLAMP PRS 2701 #3501 3503 #5108 5108 5110 #5201#10209
6	X019	[TUCPRS]	TOOL UNCLAMP PRS 3404 #3406 3502 #5108 5108 5208 #5209#10210
7	X01A	[TUCSS]	MNL TOOL UNCLAMP SS #2607 3407 #3409 5905 5906
8	X01B	[TSINTSS]	TOOL SET INTERLOCK SS 3001 #5107 #6104
9	X01C	[MDINT.M]	MACHINE DOOR INTERLOCK LS #5508
10	X01D	[ITMDSS.M]	MACHINE DOOR INTERLOCK SS #5508
11	X01E	[EXRST.M]	EXTERNMAL RESET 4405 4501 4809 7902
12	X01F	[EXFIN]	EXTERNAL FIN #4702 #4703 #5001 5006
13	X026	[AEXTRS]	MEASURING ARM EXTEND RS #2911 #4007 #4101 4104 4105 #5202 5202 5204 #5205
14	X027	[ARETRS]	MEASURING ARM RETRACT RS 2911 #5202 5202 5206 #5207
15	X02B	[PCY2PB]	PALLET CYCLE 2 PB 9301 9303 #9303 9304
16	X02C	[PDOSS]	PALLET DOOR OPEN SS 9905 10001
17	X02D	[ENPCSS]	ENABLE PALLET CHANGE SS #9213 9301 9303 9504 9602 9704 9706 9801 9805 10002 10004
18	X02E		9605 9704 9706
19	X02F	[INHRLS]	INHIBIT READ LS 3603 #3603 #3604 #3605 3606 #3607 #3701 #5210 5211 #5301 5302
20	X030	[INTX.M]	X AXIS INTERLOCK #4302

DRN. BY. K.MIURA	TITLE.	CONTROL.
DATE. 1.31.1986	VQC15/40	MAZATROL CAM M-2
CHK'D BY. T.HIRATA	YM2B453G	DRAWING NO.
DATE. 1.31.1986		42416818016
APPR'D BY. M.MURASE	SEQUENCE DIAGRAM	
DATE. 1.31.1986		SHEET. 2 OF. 103

REV.	DATE.	NAME.

YAMAZAKI MAZAK CORPORATION

*** [X] ELEMENT LIST ***

1	X031	[INTY.M]	Y AXIS INTERLOCK *4303
2	X032	[INTZ.M]	Z AXIS INTERLOCK 4304 *4304
3	X033	[INT4.M]	4 AXIS INTERLOCK 4401
4	X034	[RCTLS]	RECESSING TOOL LS *4709 4711
5	X035	[EMOP1]	EXTERNAL MISS OPERATION 1 6107
6	X036	[EXAL.M]	EXTERNAL ALARM 5602
7	X037	[PS2SS]	PALLET 2 SELECT SS 9604 9605 9705
8	X038	[ECST.M]	EXTERNAL CYCLE START 2201
9	X039	[EFHD.M]	EXTERNAL FEED HOLD *2202
10	X03A	[ESBK.M]	EXTERNAL SINGLE BLOCK 2206
11	X03B	[ECOLEN.M]	EXTERNAL COOLANT ENABLE 3805
12	X03D	[PS1SS]	PALLET 1 SELECT SS 9604 9605 9703
13	X03F	[SKIP1.M]	SKIP 1 3908 *5603 10305
14	X040	[PON1.M]	PALLET NO.1 ON 3007 3008 3012 3101 *3211
15	X041	[PON2.M]	PALLET NO.2 ON 3007
16	X042	[HLP2.M]	HEAD LUBE PRESSURE 2 5410 5501
17	X043	[TSINTLS]	TOOL SET INTERLOCK LS 3001 *3702 *6104
18	X048	[PLSS]	PALLET LOAD SS 9502 9503 9902
19	X04A	[PULSS]	PALLET UNLOAD SS 9506 9601 9902
20	X04B	[PDCSS]	PALLET DOOR CLOSE SS 9905 10003

DRN. BY. K.MIURA	TITLE.	CONTROL.
DATE. 1.31.1986	VQC15/40	MAZATROL CAM M-2
CHK'D BY. T.HIRATA	YM2B453G	DRAWING NO.
DATE. 1.31.1986		42416818016
APPR'D BY. M.MURASE	SEQUENCE DIAGRAM	
DATE. 1.31.1986		SHEET. 3 OF. 103

REV.	DATE.	NAME.

YAMAZAKI MAZAK CORPORATION

*** [X] ELEMENT LIST ***

1	X050	[PCLSS]	PALLET CLAMP SS 9708 9801
2	X051	[PUCSS]	PALLET UNCLAMP SS 9804 9805
3	X052	[MGCORS]	MAGAZINE COVER OPEN RS *2905 *2909 *5802 5802 5806 *5808 6601 7103 7703
4	X053	[MGCCRS]	MAGAZINE COVER CLOSE RS 2905 3805 *5802 5802 5804 *5805 *7103
5	X058	[PLKRS]	PALLET LOCK RS 9211 *9212
6	X05A	[MGTDPRS]	MAGAZINE TOOL DETECT PRS 10205
7	X05B	[SPTDPRS]	SPINDLE TOOL DETECT PRS *5901 7303
8	X060	[MMS-PON]	MMS UNIT POWER ON 3905 4001 *5603 *5701
9	X061	[MMS-RDY]	MMS READY 5605 *5605
10	X062	[SEN-RDY]	MMS SENSOR READY 3906 3911 *5603 5605 *5605
11	X063	[MMS-ST]	MMS START 3906 3907 *3910 4001 *5603 5606 *5701 5701
12	X068	[*SVFX.M]	*X AXIS SERVO OFF *4505
13	X069	[*SVFY.M]	*Y AXIS SERVO OFF *4506
14	X06A	[*SVFZ.M]	*Z AXIS SERVO OFF *4507
15	X073	[THR.M]	MOTOR THERMAL TRIP 5507 *5601
16	X078	[MPWS.M]	MACHINE POWER SUPPLY *5104
17	X079	[HLP.M]	HEAD LUBE PRESSURE 5410 5501
18	X07A	[WLAL.M]	WAY LUBE WARNING 5410 5502
19	X07B	[OHT.M]	MAIN TRANS FORMER OVER HEAT 5601
20	X100	[ZPX1.N]	ZERO 1 POSITION X NC 2908 4101 4610 4806 *4910 6004 7704 *7909 8001 9201 9202

REV.	DATE.	NAME.

DRN. BY. K.MIURA
DATE. 1.31.1986
CHK'D BY. T.HIRATA
DATE. 1.31.1986
APPR'D BY. M.MURASE
DATE. 1.31.1986

TITLE.
V0C15/40
YM2B453G
SEQUENCE DIAGRAM

CONTROL.
MAZATROL CAM M-2

DRAWING NO.
4241681801G

SHEET. 4 OF. 103

YAMAZAKI MAZAK CORPORATION

*** [X] ELEMENT LIST ***

```
1   X101
    0————————————————————[ZPY1.N  ] ZERO 1 POSITION Y NC
                                    2908  4611  4806 *4909
                                    5901  5902  6004 *6611
                                    6809  6901  6908

2   X102
    0————————————————————[ZPZ1.N  ] ZERO 1 POSITION Z NC
                                    2908  4007  4008  4101
                                    4103  4304  4612  4806
                                   *4908  5901  6004

3   X103
    0————————————————————[ZP41.N  ] ZERO 1 POSITION 4 NC
                                    2908 *3508  4613  4806
                                   *4911  6004 *8001

4   X108
    0————————————————————[ZPX2.N  ] ZERO 2 POSITION X NC
                                    6903

5   X109
    0————————————————————[ZPY2.N  ] ZERO 2 POSITION Y NC
                                    7105  7206  7302

6   X10A
    0————————————————————[ZPZ2.N  ] ZERO 2 POSITION Z NC
                                    4614  5902 *6611  6804
                                    7002  7104  7109  7205
                                    7304

7   X111
    0————————————————————[STL.N   ] CYCLE START LAMP NC
                                    2603 *2605  2903 *4005
                                   *4006 *4809  5002 *5506
                                   *5904  8801  8802

8   X112
    0————————————————————[SPL.N   ] FEED HOLD LAMP NC
                                   *2605 *5904 *6705  8803

9   X113
    0————————————————————[DEN.N   ] DISTRIBUTION END SIGNAL1
                                    2306  2503  4608  4609
                                    5003

10  X114
    0————————————————————[DEN2.N  ] DISTRIBUTION END SIGNAL2
                                    2306  2503

11  X118
    0————————————————————[MA.N    ] NC READY
                                    2106  2107  2108  2109
                                    2110  2111  2112  2302
                                    3114  3115  8211

12  X119
    0————————————————————[SA.N    ] SERVO READY
                                    2302  2305

13  X11A
    0————————————————————[RST.N   ] RESET NC
                                   *2113 *2806

14  X120
    0————————————————————[MF.N    ] M FUNCTION STROBE
                                    2102

15  X121
    0————————————————————[SF.N    ] S FUNCTION STROBE
                                    2103

16  X122
    0————————————————————[TF.N    ] T FUNCTION STROBE
                                    2104

17  X123
    0————————————————————[BF.N    ] B FUNCTION STROBE
                                    2105

18  X128
    0————————————————————[M11.N   ] M BCD 11
                                   *2412  2413 *2414  2415
                                   *2416  2417 *2418  2419
                                   *2420  2501  4509

19  X129
    0————————————————————[M12.N   ] M BCD 12
                                   *2412 *2413  2414  2415
                                   *2416 *2417  2418  2419
                                   *2420 *2501  4510

20  X12A
    0————————————————————[M14.N   ] M BCD 14
                                   *2412 *2413 *2414 *2415
                                    2416  2417  2418  2419
                                   *2420 *2501  4511
```

REV.	DATE.	NAME.	

DRN. BY. K.MIURA
DATE. 1.31.1986
CHK'D BY. T.HIRATA
DATE. 1.31.1986
APPR'D BY. M.MURASE
DATE. 1.31.1986

TITLE.
V0C15/40
YM2B453G
SEQUENCE DIAGRAM

CONTROL.
MAZATROL CAM M-2

DRAWING NO.
42416818016

SHEET. 5 OF. 163

YAMAZAKI MAZAK CORPORATION

*** [X] ELEMENT LIST ***

1	X12B	[M18.N]	M BCD 18 *2412 *2413 *2414 *2415 *2416 *2417 *2418 *2419 2420 2501 4512
2	X12C	[M21.N]	M BCD 21 *2402 2403 *2404 2405 *2406 2407 *2408 2409 *2410 2411 4513
3	X12D	[M22.N]	M BCD 22 *2402 *2403 2404 2405 *2406 *2407 2408 2409 *2410 *2411 4514
4	X12E	[M24.N]	M BCD 24 *2402 *2403 *2404 *2405 2406 2407 2408 2409 *2410 *2411 4601
5	X12F	[M28.N]	M BCD 28 *2402 *2403 *2404 *2405 *2406 *2407 *2408 *2409 2410 2411 4602
6	X158	[SSP.N]	SPINDLE STOP 2803
7	X159	[TOUCH.N]	TOUCH TOOL 2304 *2604 *2701 *2806 *2809 3906 3907 3908 3909 3910 3911
8	X15A	[TAP.N]	TAPPING CYCLE *2306 2306 *2503 2503 2512 2606 2607 2608 5006
9	X15B	[DIHT.N]	DUST IN HOLE 2304 *2604 *2701 *2806 *2809 6002
10	X15C	[MC4.N]	4 AXIS MOTION COMMAND 3601
11	X15D	[AEXT.N]	MEASURING ARM EXTEND COM. 4101
12	X15E	[ARET.N]	MEASURING ARM RETRACT COM. 4103
13	X15F	[REQ.N]	PALLET CHANGE REQUEST NC 8909 *9106
14	X160	[M31.N]	M BCD 31 *2307 2308 4603 *4609
15	X161	[M32.N]	M BCD 32 *2307 *2308 4604 *4609
16	X162	[M34.N]	M BCD 34 *2307 *2308 4605 *4609
17	X163	[M38.N]	M BCD 38 *2307 2308 4606 *4609
18	X180	[AUT.N]	AUTO MODE STATUS 2603 2903 4004 4203 *4902 5002 6504 6701 6904 7001 7003
19	X181	[MDI.N]	MDI MODE STATUS 5002 6503 8109 *8109 8707
20	X182	[RT.N]	RAPID TRAVERSE STATUS 3509 8708

DRN. BY. K.MIURA	TITLE.	CONTROL.
DATE. 1.31.1986	VQC15/40	MAZATROL CAM M-2
CHK'D BY. T.HIRATA	YM2B453G	DRAWING NO.
DATE. 1.31.1986		4241681801G
APPR'D BY. M.MURASE	SEQUENCE DIAGRAM	
DATE. 1.31.1986		SHEET. 6 OF. 103

REV.	DATE.	NAME.

YAMAZAKI MAZAK CORPORATION

*** [X] ELEMENT LIST ***

1	X183	[J.N]	JOG STATUS 3509 8709
2	X184	[ZP1.N]	ZERO POSITION "1" RETURN 3508 *7003 *7404 *7501 *7502 7701 7704 7802 8004 8710
3	X185	[ZP2.N]	ZERO POSITION "2" RETURN *7003 *7501 *7502 7701 *7703 7801 7803 7908 7909 8004 *8102
4	X186	[HS1.N]	HANDLE&STEP *1 3509 8712
5	X187	[HS10.N]	HANDLE&STEP *10 3509 8713
6	X188	[MG.N]	MAGAZIN SELECT 2502 2505 6105 *6503 *6504 6706 6707 6801
7	X189	[INTF.N]	INTERF. SP. TOOL LENG. 1 6803 *6811
8	X18A	[INTF2.N]	INTERF. SP. TOOL LENG. 2 *7204 *7309 7901 *7901
9	X18B	[TLOVR.N]	TOOL LIFE OVER 4901 5903
10	X18C	[ALTBK.N]	ALARM TOOL BREAKAGE NC 4107 4901
11	X18D	[TBKG.N]	TOOL BREAKAGE 4106 4201
12	X18E	[TBRFIN.N]	TOOL BREAKAGE FIN NC *4203
13	X18F	[MIRR.N]	MIRROR IMAGE MODE 4205 *4205 4206 *4206
14	X190	[SMZX.N]	SMOOTHING ZERO X 2104 *6906 *7601
15	X191	[SMZY.N]	SMOOTHING ZERO Y 2104 *7602
16	X192	[SMZZ.N]	SMOOTHING ZERO Z 2104 *6807 *7603
17	X193	[SMZ4.N]	SMOOTHING ZERO 4 2104 3602
18	X19B	[PGEND.N]	*2602 2905 4404
19	X19D	[EIA.N]	4403 6611 *6803 6811 *7204 *7309 7901
20	X19F		5103

DRN. BY. K.MIURA	TITLE.	CONTROL.
DATE. 1.31.1986	VQC15/40	MAZATROL CAM M-2
CHK'D BY. T.HIRATA	YM2B453G	DRAWING NO.
DATE. 1.31.1986		42416818016
APPR'D BY. M.MURASE	SEQUENCE DIAGRAM	
DATE. 1.31.1986		SHEET. 7 OF. 103

REV.	DATE.	NAME.

YAMAZAKI MAZAK CORPORATION

*** [X] ELEMENT LIST ***

1	X1D4	[FZRN.N]	FMS ZERO RETURN 4902 4903
2	X1D5	[FCST.N]	FMS CYCLE START *4405 8109
3	X1D6	[FESP.N]	FMS EMERGENCY STOP *2113 4501 *5102
4	X1D7	[FSBK.N]	FMS SINGLE BLOCK 2206
5	X1E0	[IHST.N]	FMS INHIBIT CYCLE START *8109
6	X0C0	[RST.B]	RESET PB *4405 *4901 *5102 7902 10212 10213 10301 10302 10303 10304
7	X0C1	[SOVRU.B]	SPINDLE OVERRIDE UP PB 7903
8	X0C2	[SOVRD.B]	SPINDLE OVERRIDE DOWN PB 7904
9	X0C3	[FOVRU.B]	FEED RATE OVERRIDE UP PB 7905
10	X0C4	[FOVRD.B]	FEED RATE OVERRIDE DOWN PB 7906
11	X0C5	[OTR.B]	OVER TRAVEL REVERSE PB *4804 6206 6601 7604 7605 7606 7703 7907
12	X0C8	[+X.B]	AXIS SELECT +X PB 6103 7908
13	X0C9	[-X.B]	AXIS SELECT -X PB 7601 7909
14	X0CA	[+Y.B]	AXIS SELECT +Y PB 6103 7703
15	X0CB	[-Y.B]	AXIS SELECT -Y PB 7602 7704
16	X0CC	[+Z.B]	AXIS SELECT +Z PB 6103 7801
17	X0CD	[-Z.B]	AXIS SELECT -Z PB 7603 7803
18	X0CE	[+4.B]	AXIS SELECT +4 PB 3508 3509 7910
19	X0CF	[-4.B]	AXIS SELECT -4 PB 3508 3509 8001
20	X0D0	[AUT.B]	AUTO MODE SELECT PB 8004

DRN. BY. K.MIURA	TITLE.	CONTROL.
DATE. 1.31.1986	VQC15/40	MAZATROL CAM M-2
CHK'D BY. T.HIRATA	YM2B453G	DRAWING NO.
DATE. 1.31.1986		42416818016
APPR'D BY. M.MURASE	SEQUENCE DIAGRAM	
DATE. 1.31.1986		SHEET. 8 OF. 103

REV.	DATE.	NAME.

YAMAZAKI MAZAK CORPORATION

*** [X] ELEMENT LIST ***

1	X0D1	[MDI.B]	MDI MODE SELECT PB 8005
2	X0D2	[RT.B]	RAPID TRAVEL MODE SELECT PB 8006
3	X0D3	[J.B]	JIG MODE SELECT PB 8007
4	X0D4	[ZP1.B]	ZERO POSITION 1 RETURN PB 7503
5	X0D5	[ZP2.B]	ZERO POSITION 2 RETURN PB 7504 *7703 *8102
6	X0D6	[HS1.B]	HANDLE&STEP #1 PB 8008 8009 8010
7	X0D7	[HS10.B]	HANDLE&STEP #10 PB 8008 8009 8101
8	X0D8	[CST.B]	CYCLE START PB 2201
9	X0D9	[FHD.B]	FEED HOLD PB 2202
10	X0DA	[ZP.B]	ZERO POSITION RETURN PB 3508 8102 8804
11	X0DB	[TPS.B]	TOOL PASS PB 8103
12	X0DC	[VFC.B]	VELOCITY FEED RATE CONTROL PB 8104
13	X0DE	[RDEC.B]	RAPID TRAVERSE DEC. PB 8105
14	X0E0	[SST.B]	SPINDLE START PB 2604 5906 6001
15	X0E1	[SSP.B]	SPINDLE STOP PB *2606
16	X0E2	[SJOG.B]	SPINDLE JOG PB 2701 2704 *2711 *2712 4803 5906 6001
17	X0E3	[SREV.B]	SPINDLE REVERSE PB 2706 2707
18	X0E8	[ATCSP.B]	ATC STOP COMMAND PB 6612
19	X0E9	[CL.B]	COOLANT CHOICE PB 8110 8111
20	X0EA	[F1.B]	FUNCTION KEY NO.1 3405

REV.	DATE.	NAME.

DRN. BY. K.MIURA
DATE. 1.31.1986
CHK'D BY. T.HIRATA
DATE. 1.31.1986
APPR'D BY. M.MURASE
DATE. 1.31.1986

TITLE.
V0C15/40
YM2B453G
SEQUENCE DIAGRAM

CONTROL.
MAZATROL CAM M-2
DRAWING NO.
42416818016
SHEET. 9 OF. 703

YAMAZAKI MAZAK CORPORATION

*** [X] ELEMENT LIST ***

1	X0EB	[F2.B]	FUNCTION KEY NO.2 8202 9803
2	X0EC	[F3.B]	FUNCTION KEY NO.3 8204 9803
3	X0F0	[PRG.B]	PROGRAM CHANGE 8210
4	X0F1	[HY.B]	HANDLE Y AXIS SELECT 8207
5	X0F3	[HZ.B]	HANDLE Z AXIS SELECT 8208
6	X0F4	[H4.B]	HANDLE 4 AXIS SELECT 3509 *8008 8009 8101 8209
7	X0F7	[HX.B]	HANDLE X AXIS SELECT 8206

DRN. BY. K.MIURA	TITLE.	CONTROL.
DATE. 1.31.1986	V9C15/40	MAZATROL CAM M-2
CHK'D BY. T.HIRATA	YM2B453G	DRAWING NO.
DATE. 1.31.1986		4241681801G
APPR'D BY. M.MURASE	SEQUENCE DIAGRAM	
DATE. 1.31.1986		SHEET. 10 OF. 103

REV.	DATE.	NAME.

YAMAZAKI MAZAK CORPORATION

*** [Y] ELEMENT LIST ***

1	Y000	[PCL]	PALLET CLAMP 9802
2	Y001	[PUC]	PALLET UNCLAMP 9901
3	Y002	[MREV.M]	MAGAZINE REVERSE 3309
4	Y003	[MFWD.M]	MAGAZINE FORWARD 3308
5	Y004	[PAB]	PALLET AIR BLOW 10005
6	Y005	[PDO]	PALLET DOOR OPEN 10002
7	Y006	[PDC]	PALLET DOOR CLOSE 10004
8	Y008	[SFR.M]	SPINDLE FORWARD 2711
9	Y009	[SRU.M]	SPINDLE REVERSE 2712
10	Y00A	[SMR.M]	SPINDLE MOTOR RUN 2705
11	Y00B	[SCAB.M]	SPINDLE MOTOR COOLING AIR 2902
12	Y00C	[GSL.M]	GEAR SHIFT LOW 3302
13	Y00D	[PLD]	PALLET LOAD 9504
14	Y00E	[PUL]	PALLET UNLOAD 9602
15	Y010	[FCM.M]	FLOOD COOLANT MOTOR 3808
16	Y011	[FCL.M]	FLOOD COOLANT VALVE 3806
17	Y012	[THC.M]	THROUGH HOLE COOLANT 3807
18	Y013	[MCL.M]	MIST COOLANT 3810
19	Y014	[WAB.M]	WORK AIR BLAST 3901
20	Y015	[WAB2.M]	WORK AIR BLAST 2 3902

REV.	DATE.	NAME.	

DRN. BY. K.MIURA
DATE. 1.31.1986
CHK'D BY. T.HIRATA
DATE. 1.31.1986
APPR'D BY. M.MURASE
DATE. 1.31.1986

TITLE.
V9C15/40
YM2B453G
SEQUENCE DIAGRAM

CONTROL.
MAZATROL CAM M-2

DRAWING NO.
4241681801G

SHEET. 11 OF. 103

YAMAZAKI MAZAK CORPORATION

*** [Y] ELEMENT LIST ***

1	Y016	[TAPC.M]	TAP COOLANT 3809
2	Y018	[SAB.M]	SPINDLE AIR BLAST 3704
3	Y019	[P1S]	PALLET 1 SELECT 9704
4	Y01A	[P2S]	PALLET 2 SELECT 9706
5	Y01B	[PCY1]	PALLET 1 CYCLE 9301
6	Y01C	[MFA.M]	MHO M FUNCTION 4609
7	Y01D	[MF.M]	M FUNCTION 4608
8	Y01E	[PCY2]	PALLET 2 CYCLE 9303
9	Y01F	[PULK]	PALLET UNLOCK 9903
10	Y020	[PW1.M]	POWER ON 2101
11	Y021	[OTR.M]	OT REVERSE 6206
12	Y022	[SSET.M]	SPINDLE SET 2304
13	Y023	[ORCM1.M]	SPINDLE ORIENT COMMAND 2806
14	Y024	[HYD.M]	HYDRAURIC PUMP&HEAD LUBE PUMP 2302
15	Y025	[TUC.M]	TOOL UNCLAMP 3412
16	Y026	[MGC.M]	MAGAZINE COVER CLOSE 2906
17	Y027	[WL.M]	WORK LIGHT 4402
18	Y028	[ZPX.M]	X ZERO POSITION 4610
19	Y029	[ZPY.M]	Y ZERO POSITION 4611
20	Y02A	[ZPZ.M]	Z ZERO POSITION 4612

DRN. BY. K.MIURA	TITLE.	CONTROL.
DATE. 1.31.1986	VQC15/40	MAZATROL CAM M-2
CHK'D BY. T.HIRATA	YM2B453G	DRAWING NO.
DATE. 1.31.1986		4241681801G
APPR'D BY. M.MURASE	SEQUENCE DIAGRAM	
DATE. 1.31.1986		SHEET. 12 OF. 103

REV.	DATE.	NAME.

YAMAZAKI MAZAK CORPORATION

*** [Y] ELEMENT LIST ***

1	Y02B	[ZP4.M]	4 ZERO POSITION 4613
2	Y02C	[PSULK]	PALLET SELECT UNLOCK 9606
3	Y02D	[FHDL.M]	FEED HOLD LED 4705
4	Y02E	[ZP2Z.M]	Z ZERO POSITION 2nd 4614
5	Y030	[M43T.M]	M43 OUTPUT 3604
6	Y031	[M44T.M]	M44 OUTPUT 3605
7	Y032	[M45T.M]	M45 OUTPUT 3603
8	Y033	[TCME.M]	BARRIER EXPEND at ATC ARE 6601
9	Y034	[AEXT.M]	MEASURING ARM EXTEND 4104
10	Y035	[A-JET.M]	AIR JET 3904
11	Y036	[MMSCMD.M]	MMS COMMAND (MMS UNIT ON) 3910
12	Y037	[SA.M]	SERVO READY 2305
13	Y038	[AUT.M]	AUTO MODE MC. 2114
14	Y039	[PUCCD]	PALLET UNCLAMP COMMAND 4702
15	Y03A	[FHD.PB]	FEED HOLD PB. 4704
16	Y03B	[CSTL.M]	CYCLE START LED 4707
17	Y03C	[CST.PB]	CYCLE START PB. 4706
18	Y03D	[PCLCD]	PALLET CLAMP COMMAND 4703
19	Y03E	[AL77,78]	ALARM 77 & 78 10306
20	Y03F	[MMAL1.M]	MACHINE MALFUNCTION 1 4701

DRN. BY. K.MIURA	TITLE.	CONTROL.
DATE. 1.31.1986	VQC15/40	MAZATROL CAM M-2
CHK'D BY. T.HIRATA	YM2B453G	DRAWING NO.
DATE. 1.31.1986		42416818016
APPR'D BY. M.MURASE	SEQUENCE DIAGRAM	
DATE. 1.31.1986		SHEET. 73 OF. 103

REV.	DATE.	NAME.

YAMAZAKI MAZAK CORPORATION

*** [Y] ELEMENT LIST ***

1	Y040	[MRDY.M]	MACHINE READY 4615
2	Y041	[RST.M]	RESET OUT 4616
3	Y042	[CYFIN.M]	CYCLE FINISH LIGHT 4405
4	Y043	[B38.M]	B BCD 38 3501
5	Y044	[M11.M]	M BCD 11 4509
6	Y045	[M12.M]	M BCD 12 4510
7	Y046	[M14.M]	M BCD 14 4511
8	Y047	[M18.M]	M BCD 18 4512
9	Y048	[M21.M]	M BCD 21 4513
10	Y049	[M22.M]	M BCD 22 4514
11	Y04A	[M24.M]	M BCD 24 4601
12	Y04B	[M28.M]	M BCD 28 4602
13	Y04C	[M31.M]	M BCD 31 4603
14	Y04D	[M32.M]	M BCD 32 4604
15	Y04E	[M34.M]	M BCD 34 4605
16	Y04F	[M38.M]	M BCD 38 4606
17	Y100	[ITX.N]	X AXIS INTERLOCK N/C 4302
18	Y101	[ITY.N]	Y AXIS INTERLOCK N/C 4303
19	Y102	[ITZ.N]	Z AXIS INTERLOCK N/C 4304
20	Y103	[IT4.N]	4th AXIS INTERLOCK N/C 4401

REV.	DATE.	NAME.

DRN. BY. K.MIURA
DATE. 1.31.1986
CHK'D BY. T.HIRATA
DATE. 1.31.1986
APPR'D BY. M.MURASE
DATE. 1.31.1986

TITLE.
VQC15/40
YM2B453G
SEQUENCE DIAGRAM

CONTROL.
MAZATROL CAM M-2

DRAWING NO.
42416818016

SHEET. 14 OF. 103

YAMAZAKI MAZAK CORPORATION

*** [Y] ELEMENT LIST ***

1	Y108	[SVFX.N]	X AXIS SERVO OFF N/C 4505
2	Y109	[SVFY.N]	Y AXIS SERVO OFF N/C 4506
3	Y10A	[SVFZ.N]	Z AXIS SERVO OFF N/C 4507
4	Y10B	[SVF4.N]	4th AXIS SERVO OFF N/C 4508
5	Y111	[PEND.N]	PROGRAM END 4809
6	Y112	[PERDY.N]	PROGRAM END READY 4808
7	Y113	[FSTL.N]	FMS CYCLE START 4807
8	Y116	[AZP.N]	ALL AXIS ZERO POSITION 4806
9	Y117	[MCRDY.N]	MACHINE READY 4805
10	Y119	[WFL.N]	W FAIL 4901
11	Y11B	[MFL.N]	MACHINE FAIL 4812
12	Y120	[GSH.N]	GEAR HIGH SIGNAL N/C 2804
13	Y128	[PCDS1.N]	DATA STATES AXIS MOVE1 NC 9005
14	Y129	[PCDS2.N]	DATA STATES AXIS MOVE2 NC 9005
15	Y12E	[PCMCD.N]	PALLET CHANGE M CODE COMMAND 9006
16	Y12F	[PCFIN.N]	PALLET CHANGE CYCLE FIN 9007
17	Y140	[SBK.N]	SINGLE BLOCK NC 2206
18	Y141	[MLK.N]	MACHINE LOCK NC 8505
19	Y142	[DRN.N]	DRY RUN NC 8601
20	Y143	[EREND.N]	ERROR DETECT ON NC 4503

DRN. BY. K.MIURA	TITLE.	CONTROL.
DATE. 1.31.1986	V9C15/40	MAZATROL CAM M-2
CHK'D BY. T.HIRATA	YM2B453G	DRAWING NO.
DATE. 1.31.1986		4241681801G
APPR'D BY. N.MURASE	SEQUENCE DIAGRAM	
DATE. 1.31.1986	-	SHEET. 15 OF. 703

REV.	DATE.	NAME.

YAMAZAKI MAZAK CORPORATION

*** [Y] ELEMENT LIST ***

1	Y144	[MIRRORX] X AXIS MIRROR IMAGE ON 4205
2	Y145	[MIRRORY] Y AXIS MIRROR IMAGE ON 4206
3	Y147	[PCDSFN.N] PC DATA STATES FIN NC 9106
4	Y150	[MEND1.L] MENUE DATA 1 LAMP NC 8312
5	Y151	[MEND2.L] MENUE DATA 2 LAMP NC 8313
6	Y152	[MEND3.L] MENUE DATA 3 LAMP NC 8314
7	Y153	[MEND4.L] MENUE DATA 4 LAMP NC 8401
8	Y154	[MEND5.L] MENUE DATA 5 LAMP 8402
9	Y155	[MEND6.L] MENUE DATA 6 LAMP 8403
10	Y156	[MEND7.L] MENUE DATA 7 LAMP 8404
11	Y157	[MEND8.L] MENUE DATA 8 LAMP 8405
12	Y158	[MEND9.L] MENUE DATA 9 LAMP 8406
13	Y168	[FIN.N] FIN SIGNAL NC 5101
14	Y169	[ERS.N] EXTERNAL RESET NC 4501
15	Y16A	[OTNEG.N] SOFT OT NEGLECT NC 7505
16	Y16B	[ZPDEC.N] ZERO POSITION RETURN DEC. NC 7310
17	Y16C	[AEXT.N] MEASURING ARM EXTEND NC 4105
18	Y16D	[TBRCD.N] TOOL BREAKAGE COMMAND NC 4203
19	Y16E	[TBRFIN.N] TOOL BREAKAGE FIN 4106
20	Y16F	[MMSCD.N] MMS COMMAND NC 4001

DRN. BY. K.MIURA	TITLE.	CONTROL.
DATE. 1.31.1986	VQC15/40	MAZATROL CAM M-2
CHK'D BY. T.HIRATA	YM2B453G	DRAWING NO.
DATE. 1.31.1986		4241681801G
APPR'D BY. M.MURASE	SEQUENCE DIAGRAM	
DATE. 1.31.1986		SHEET. 16 OF. 103

REV.	DATE.	NAME.

YAMAZAKI MAZAK CORPORATION

*** [Y] ELEMENT LIST ***

1	Y180	[RST.B.N]	RESET SIGNAL B TO NC 7902
2	Y181	[SOVRU.N]	SPINDLE OVERRIDE UP NC 7903
3	Y182	[SOVRD.N]	SPINDLE OVERRIDE DOWN NC 7904
4	Y183	[FOVRU.N]	F. RATE OVERRIDE UP NC 7905
5	Y184	[FOVRD.N]	F. RATE OVERRIDE DOWN NC 7906
6	Y185	[OTR.N]	OT RELEASE TO NC 7907
7	Y188	[+X.N]	+X DIRECTION COMMAND NC 7908
8	Y189	[-X.N]	-X DIRECTION COMMAND NC 7909
9	Y18A	[+Y.N]	+Y DIRECTION COMMAND NC 7703
10	Y18B	[-Y.N]	-Y DIRECTION COMMAND NC 7704
11	Y18C	[+Z.N]	+Z DIRECTION COMMAND NC 7801
12	Y18D	[-Z.N]	-Z DIRECTION COMMAND NC 7803
13	Y18E	[+4.N]	+4 DIRECTION COMMAND NC 7910
14	Y18F	[-4.N]	-4 DIRECTION COMMAND NC 8001
15	Y190	[AUT.B.N]	AUTO MODE NC 8004
16	Y191	[MDI.B.N]	MDI MODE NC 8005
17	Y192	[RT.B.N]	RAPID TRAVERSE NC 8006
18	Y193	[J.B.N]	8007
19	Y194	[ZP1.B.N]	REFELENCE 1 POINT CMD. 7503
20	Y195	[ZP2.B.N]	REFELENCE 2 POINT CMD. 7504

DRN. BY. K.MIURA	TITLE.	CONTROL.
DATE. 1.31.1986	VQC15/40	MAZATROL CAM M-2
CHK'D BY. T.HIRATA	YM2B453G	DRAWING NO.
DATE. 1.31.1986		4241681901G
APPR'D BY. M.MURASE	SEQUENCE DIAGRAM	
DATE. 1.31.1986		SHEET. 17 OF. 103

REV.	DATE.	NAME.

YAMAZAKI MAZAK CORPORATION

*** [Y] ELEMENT LIST ***

1	Y196	[HS1.B.N] HAND PULSE X1 NC	8010
2	Y197	[HS10.B.N] HAND PULSE X10 NC	8101
3	Y198	[ST.B.N] CYCLE START NC	8109
4	Y199	[SP.B.N]	2203
5	Y19A	[ZP.B.N] REF. 1 RETURN ALL AXIS	8102
6	Y19B	[TPS.N] TOOL PASS MODE NC	8103
7	Y19C	[VFC.N] VELOCITY FEED RATE CONTROL NC	8104
8	Y19E	[RDEC.B.N] RAPID DECELERATION NC	8108
9	Y1A8	[ATCSP.N]	6702
10	Y1A9	[CL.B.N] COOLANT BUTTON TO NC	8113
11	Y1AB	[F2.B.N] FUNCTION KEY 2 TO NC	8202
12	Y1AC	[F3.B.N] FUNCTION KEY 3 TO NC	8204
13	Y1B0	[HX.B.N] HANDLE X SELECT NC	8206
14	Y1B1	[HY.B.N] HANDLE Y SELECT NC	8207
15	Y1B2	[HZ.B.N] HANDLE Z SELECT NC	8208
16	Y1B3	[H4.B.N] HANDLE 4 SELECT NC	8209
17	Y1B7	[PRG.N] PROGRAM END NC	8210
18	Y1B9		*10305
19	Y1C0	[AUT.L] AUTO MODE LAMP	8706
20	Y1C1	[MDI.L] MDI MODE LAMP	8707

DRN. BY. K.MIURA	TITLE.	CONTROL.
DATE. 1.31.1986	VQC15/40	MAZATROL CAM M-2
CHK'D BY. T.HIRATA	YM2B453G	DRAWING NO.
DATE. 1.31.1986		42416818016
APPR'D BY. M.MURASE	SEQUENCE DIAGRAM	
DATE. 1.31.1986		SHEET. 18 OF. 103

REV.	DATE.	NAME.

YAMAZAKI MAZAK CORPORATION

*** [Y] ELEMENT LIST ***

1	Y1C2	[RT.L]	RAPID TRAVERSE LAMP 8708
2	Y1C3	[J.L]	JOG LAMP 8709
3	Y1C4	[ZP1.L]	ZERO POSITION 1 LAMP 8710
4	Y1C5	[ZP2.L]	ZERO POSITION 2 LAMP 8711
5	Y1C6	[HS1.L]	HAND PULSE 1 LAMP 8712
6	Y1C7	[HS10.L]	HAND PULSE 10 LAMP 8713
7	Y1C8	[ST.L]	CYCLE START LAMP 8802
8	Y1C9	[SP.L]	FEED HOLD LAMP 8803
9	Y1CA	[ZP.L]	ALL AXIS ZERO RETURN LAMP 8804
10	Y1CE	[RDEC.L]	RAPID DECELERATION LAMP 8805
11	Y1D0	[SST.L]	SPINDLE START LAMP 2702
12	Y1D1	[SSP.L]	SPINDLE STOP LAMP 2703
13	Y1D2	[SJOG.L]	SPINDLE JOG LAMP 2704
14	Y1D3	[SREV.L]	SPINDLE REVERSE LAMP 2801
15	Y1D4	[SLCK.L]	SPINDLE LOCK LAMP 5404
16	Y1D5	[TUC.L]	TOOL UNCLAMP LAMP 3502
17	Y1D8	[ATCSP.L]	ATC STOP LAMP 6701
18	Y1D9	[CL.L]	COOLANT LAMP 8201
19	Y1DA	[F1.L]	FUNCTION KEY 1 LAMP 3406
20	Y1DB	[F2.L]	FUNCTION KEY 2 LAMP 8203

DRN. BY. K.MIURA	TITLE.	CONTROL.
DATE. 1.31.1986	V9C15/40	MAZATROL CAM M-2
CHK'D BY. T.HIRATA	YM2B453G	DRAWING NO.
DATE. 1.31.1986		4241681801G
APPR'D BY. M.MURASE	SEQUENCE DIAGRAM	
DATE. 1.31.1986		SHEET. 19 OF. 103

REV.	DATE.	NAME.

YAMAZAKI MAZAK CORPORATION

*** [Y] ELEMENT LIST ***

1	Y1DC	[F3.L] FUNCTION KEY 3 LAMP 8205
2	Y1EB	[PRGSTP.L] PROGRAM STOP LAMP 2205
3	Y1EC	[MFAIL.L] MACHINE FAIL LAMP 6502
4	Y1F8	[MMSON.L] MMS ON LAMP 3905
5	Y1F9	[MMSRDY.L] MMS READY LAMP 3906
6	Y1FA	[MMSST.L] MMS START LAMP 3907
7	Y1FB	[MMSSKP.L] MMS SKIP LAMP 3908

REV.	DATE.	NAME.	

DRN. BY. K.MIURA
DATE. 1.31.1986
CHK'D BY. T.HIRATA
DATE. 1.31.1986
APPR'D BY. M.MURASE
DATE. 1.31.1986

TITLE.
VQC15/40
YM2B453G
SEQUENCE DIAGRAM

CONTROL.
MAZATROL CAM M-2

DRAWING NO.
4241681801G

SHEET. 20 OF. 103

YAMAZAKI MAZAK CORPORATION

```
: PONDAMY
:  H07F.2
1 *---]/[---*-------------------------------------------------------------------------------------------------------------
:    M250   I
:    2101   I
: PONDAMY   I
:  H07F.2   I
1 *---] [---*
:    M250
:    2101
: MF.N
:  H134.0
2 *---] [-------------------------------------------------------------------------------------------------------------
:    X120
:     514
: SF.N
:  H134.1
3 *---] [-------------------------------------------------------------------------------------------------------------
:    X121
:     515
: SMZX.N      SMZY.N      SMZZ.N      SMZ4.N      TF.N
:  H142.0      H142.1      H142.2      H142.3      H134.2
4 *---] [-----]/[-----]/[-----]/[-----]/[-----*-----] [-------------------------------------------------------------------
:    X190        X191        X192        X193   I    X122
:     714         715         716         717   I     516
: TF                                             I
:  H079.4                                        I
4 *---] [-----------------------------------------*
:    M204
:    2104
: BF.N
:  H134.3
5 *---] [-------------------------------------------------------------------------------------------------------------
:    X123
:     517
: MA.N
:  H133.0
6 *---] [-------------------------------------------------------------------------------------------------------------
:    X118
:     511
: MA.N
:  H133.0
7 *---] [-------------------------------------------------------------------------------------------------------------
:    X118
:     511
: MA.N
:  H133.0
8 *---] [-------------------------------------------------------------------------------------------------------------
:    X118
:     511
: MA.N
:  H133.0
9 *---] [-------------------------------------------------------------------------------------------------------------
:    X118
:     511
: MA.N
:  H133.0
10 *---] [------------------------------------------------------------------------------------------------------------
:    X118
:     511
: MA.N
:  H133.0
11 *---] [------------------------------------------------------------------------------------------------------------
:    X118
:     511
: MA.N
:  H133.0
12 *---] [------------------------------------------------------------------------------------------------------------
:    X118
:     511
: ERS.N       PGEND.P     HYD.M       RST.N       *ESP.M      FESP.N
:  H10D.1      H070.3      H044.4      H133.2      H000.0      H14A.6
13 *---]/[-----]/[-----]/[-----]/[-----]/[-----]/[-----------------------------------------------------------------------
:    Y169        M131        Y024        X11A        X000        X1D6
:    4501        4404        2302         513         101         803
: AUT.L       HYD.M
:  H118.0      H044.4
14 *---] [---*---] [-------------------------------------------------------------------------------------------------------
:    Y1C0   I    Y024
:    8706   I    2302
: MD1.L     I
:  H118.1   I
14 *---] [---*
:    Y1C1
:    8707
: AUT.M
:  H047.0
15 *---] [------------------------------------------------------------------------------------------------------------
:    Y038
:    2114
: AUT.M
:  H047.0
16 *---]/[------------------------------------------------------------------------------------------------------------
:    Y038
:    2114
```

```
PW1.M      : POWER ON
 H044.0    :  2101  2304  3905  4810
---( )---*  :  4811  8806  8807  8808
 Y020      :  8809
 #  2      :
MF         : MF CODE
 H079.2    :  2102  2306  2503  4607
---( )---*  :  5001  5003  5007 *5007
 M202      :  5101 *7401
 #  4      :
SF         : SF CODE
 H079.3    :  2103  2401  2504  5101
---( )---*  : *5311 *7401
 M203      :
 #  6      :
TF         : TF CODE
 H079.4    :  2104  2502  2505 *3907
---( )---*  : *3908 *3909 *3910 *4001
 M204      :  5008 *5008  5101
 # 13      :
BF         : BF CODE
 H079.5    :  2105 *7401
---( )---*  :
 M205      :
 # 15      :
+-------+  :
I MOV   I  :
I  D 80 I--*
I K2M400I  :
+-------+  :
I MOV   I  :
I  D 81 I--*
I K2M408I  :
+-------+  :
I MOV   I  :
I  D 82 I--*
I K2M416I  :
+-------+  :
I MOV   I  :
I  D 83 I--*
I K2M424I  :
+-------+  :
I MOV   I  :
I  D 84 I--*
I K2M432I  :
+-------+  :
I MOV   I  :
I  D 85 I--*
I K2M496I  :
+-------+  :
I MOV   I  :
I  D 86 I--*
I K2M504I  :
+-------+  :
*RST       : RESET
 H060.0    :  2113  2204  2602  2606
---( )---*  :  2805  2809  2905  2909
 M  0      :  2910  3303  3306
 # 50      :
AUT.M      : AUTO MODE MC.
 H047.0    :  2114  2115 *2116  2204
---( )---*  : *2604  2606  2607 *2701
 Y038      : *2704 *2706  2910
 # 54      :
+-------+  : AUTO MODE PULSE
I PLS   I  :  2115 *2607
I M 30  I--*
I H063.6I  :
+-------+  : MANUAL MODE PULSE
I PLS   I  :  2116 *2607
I M 31  I--*
I H063.7I  :
+-------+  :
```

DRN. BY. K.MIURA	TITLE.	CONTROL.
DATE. 1.31.1986	VQC15/40	MAZATROL CAM M-2
CHK'D BY. T.HIRATA	YM2B453G	DRAWING NO.
DATE. 1.31.1986		4241681801G
APPR'D BY. M.MURASE	SEQUENCE DIAGRAM	
DATE. 1.31.1986		SHEET. 21 OF. 103

REV.	DATE.	NAME.

YAMAZAKI MAZAK CORPORATION

```
  : ECST.M      ADDIS                                                                    CSTBX      : CYCLE START AUX
  :  H007.0      H095.4                                                                   H076.3    :   2201 *2204 *3703  3910
1 *---] [--------] [---*-------------------------------------------------------------( )---*  *4405  4706 *5701  6102
  :   X038        M428  I                                                                 M179     :  *6703 *6705 *7702
  :    308        2201  I                                                                 # 62     :
  : CST.B                I
  :  H163.0              I
1 *---] [--------------*
  :   X0D8
  :    908
  : EFHD.M      ADDIS                                                                    FHDBX      : FEED HOLD AUX
  :  H007.1      H095.4                                                                   H076.2    :   2202  2203 *2204 *4405
2 *---]/[--------]/[---*-------------------------------------------------------------( )---*  4704 *5102  6705
  :   X039        M428  I                                                                 M178     :
  :    309        2201  I                                                                 # 66     :
  : FHD.B                I
  :  H163.1              I
2 *---] [--------------*
  :   X0D9
  :    909
  : AL65        MMSS        ATCFINME                                                     SP.B.N     :
  :  H0C8.1      H095.1      H091.3                                                       H113.1    :   2203
3 *---] [--------] [---*---]/[---*-------------------------------------------------------( )---*
  :   F 65        M425  I    M395  I                                                      Y199     :
  :   5701        2203  I    7901  I                                                      # 76     :
  : FHDBX                I FINF    I
  :  H076.2              I  H06E.5 I
3 *---] [---*----------*---] [---*
  :   M178  I                M117
  :   2202  I                5002
  : ALFSP   I
  :  H06F.1 I
3 *---] [---*
  :   M121  I
  :   6205  I
  : AL55    I
  :  H0C6.7 I
3 *---] [---*
  :   F 55  I
  :   5508  I
  : ATCFHOME I
  :  H075.1 I
3 *---] [---*
  :   M169
  :   6705
  : OSPON       MU1         MH0         MT0         CSTBX       *RST        FHDBX       AUT.M                                SBKME      : SINGLE BLOCK MEMORY
  :  H08B.5      H061.3      H060.5      H062.4      H076.3      H060.0      H076.2      H047.0                               H06C.0    :   2204  2205  2301  2605
4 *---] [--------] [---*---] [--------] [---*---]/[--------] [--------]/[--------] [-----------------------------------------( )---*
  :   M349        M 11  I    M  5        M 20  I    M179        M  0        M178        Y038                                 M 96     :
  :   8511        2413  I    2307        2402  I    2201        2113        2202        2114                                 # 87     :
  : MU0                 I                      I
  :  H061.2             I                      I
4 *---] [--------------*                      *
  :   M 10                                     I
  :   2412                                     I
  : SBKME                                      I
  :  H06C.0                                    I
4 *---] [-----------------------------------*
  :   M 96
  :   2204
  : SBKME                                                                                PRGSTP.L   : PROGRAM STOP LAMP
  :  H06C.0                                                                              H11D.3    :   2205 *3805
5 *---] [-------------------------------------------------------------------------------( )---*
  :   M 96                                                                               Y1EB     :
  :   2204                                                                               # 89     :
  : ESBK.M      ADDIS                                                                    SBK.N      : SINGLE BLOCK NC
  :  H007.2      H095.4                                                                   H108.0    :   2206  5506  9105 *9105
6 *---] [--------] [---*-------------------------------------------------------------( )---*
  :   X03A        M428  I                                                                 Y140     :
  :    310        2201  I                                                                 # 95     :
  : SBKAX                I
  :  H07F.4              I
6 *---] [---*----------*
  :   M252  I
  :   2301  I
  : FSBK.N  I
  :  H14A.7 I
6 *---] [---*
  :   X1D7  I
  :    804  I
  : AL0     I
  :  H0C0.0 I
6 *---] [---*
  :   F 0
  :   5103
```

				DRN. BY. K.MIURA	TITLE.	CONTROL.
				DATE. 1.31.1986	VQC15/40	MAZATROL CAM M-2
				CHK'D BY. T.HIRATA	YMZB453G	DRAWING NO.
				DATE. 1.31.1986		4241681801G
				APPR'D BY. M.MURASE	SEQUENCE DIAGRAM	
				DATE. 1.31.1986		SHEET. 22 OF. 103
REV.	DATE.	NAME.		YAMAZAKI MAZAK CORPORATION		

```
: ALHLP                                                                                  SBKAX     : SINGLE BLOCK AUX
:  H071.5                                                                                H07F.4    :  2206  2301
1 *---] [---*------------------------------------------------------------------------------( )---*
:    M141   I                                                                            M252      :
:    5501   I                                                                            # 104     :
: ALWLB     I                                                                                      :
:  H071.6   I                                                                                      :
1 *---] [---*                                                                                      *
:    M142   I                                                                                      :
:    5502   I                                                                                      :
: SBKME     I                                                                                      :
:  H06C.0   I                                                                                      :
1 *---] [---*                                                                                      *
:    M 96   I                                                                                      :
:    2204   I                                                                                      :
: SBKON     I                                                                                      :
:  H08B.2   I                                                                                      :
1 *---] [---*                                                                                      *
:    M346   I                                                                                      :
:    8508   I                                                                                      :
: AL57      I                                                                                      :
:  H0C7.1   I                                                                                      :
1 *---] [---*                                                                                      *
:    F 57   I                                                                                      :
:    5601   I                                                                                      :
: AL51      I                                                                                      :
:  H0C6.3   I                                                                                      :
1 *---] [---*                                                                                      *
:    F 51   I                                                                                      :
:    5504   I                                                                                      :
: TLIFSBK   I                                                                                      :
:  H07E.2   I                                                                                      :
1 *---] [---*                                                                                      *
:    M242   I                                                                                      :
:    4202   I                                                                                      :
: ALTBKG    I                                                                                      :
:  H07E.0   I                                                                                      :
1 *---] [---*                                                                                      *
:    M240                                                                                          :
:    4107                                                                                          :
: MA.N        SA.N        *ESP.M                                                         HYD.M     : HYDRAURIC PUMP&HEAD LUBE PUMP
:  H133.0      H133.1       H000.0                                                        H044.4    :  2113  2114  2302  *2303
2 *---] [-------] [-------] [-----------------------------------------------------------( )---*      :  2304  2908  3605  3805
:    X118        X119         X000                                                        Y024      :  *4104  4615  4805
:    511         512          101                                                         # 108     :
: HYD.M       SZS.M                                                                      *---------* : EMG. DELAY TIMER
:  H044.4      H000.1                                                                    I  T  0 I :  2303 *2304
3 *---]/[-------] [-----------------------------------------------------------------------I K  20I-*
:    Y024        X001                                                                    I H0A0.0I :
:    2302        102                                                                     *---------* :
: HYD.M       PW1.M       ESPT        AL46                                               SSET.M    : SPINDLE SET
:  H044.4      H044.0      H0B0.0      H0C5.6                                             H044.2    :  2304 *4302 *4303 *4304
4 *---] [---*---] [-------]/[---*---]/[-----------------------------------------------------( )---*
:    Y024   I    Y020        T  0   I    F 46                                            Y022      :
:    2302   I    2101        2303   I    5407                                            # 120     :
: SSET.M    I                       I                                                              :
:  H044.2   I                       I                                                              :
4 *---] [---*                       *                                                              *
:    Y022                           I                                                              :
:    2304                           I                                                              :
: DIHT.N                            I                                                              :
:  H13B.3                           I                                                              :
4 *---] [---*-----------------------*                                                              *
:    X15B   I                                                                                      :
:    609    I                                                                                      :
: TOUCH.N   I                                                                                      :
:  H13B.1   I                                                                                      :
4 *---] [---*                                                                                      *
:    X159                                                                                          :
:    607                                                                                           :
: SA.N        *ESP.M                                                                         SA.M      : SERVO READY
:  H133.1      H000.0                                                                        H046.7    :  2305  5409
5 *---] [-------] [-----------------------------------------------------------------------( )---*
:    X119        X000                                                                        Y037      :
:    512         101                                                                         # 123     :
: DEN.N       TAP.N       MF          MFT                                                    MFP       : M FUNCTION PULSE
:  H132.3      H13B.2      H079.2      H0B0.1                                                 H060.1    :  2306  2307  2308  2402
6 *---] [---*---]/[---*---] [---*-------]/[-----------------------------------------------------( )---*      :  2403  2404  2405  2406
:    X113   I    X15A   I    M202        T  1                                            M  1      :  2407  2408  2409
:    509    I    608    I    2102        2503                                            # 132     :
: MNAL>300  I           I                                                                          :
:  H095.6   I           I                                                                          :
6 *---]/[---*           *                                                                          *
:    M430               I                                                                          :
:    2306               I                                                                          :
: DEN2.N      TAP.N      I                                                                          :
:  H132.4      H13B.2   I                                                                          :
6 *---] [-------] [---*                                                                            *
:    X114        X15A                                                                              :
:    510         608                                                                               :
: MFP         M38.N       M34.N       M32.N       M31.N                                      MH0       : M HUNDRED 0
:  H060.1      H13C.3      H13C.2      H13C.1      H13C.0                                     H060.5    :  2204  2307  2506  2507
7 *---] [-------]/[-------]/[-------]/[-------]/[-----------------------------------------------( )---*      :  2513  2601  2803  2805
:    M  1        X163        X162        X161        X160                                    M  5      :  2905 *2905  2909
:    2306        617         616         615         614                                     # 138     :
: MFP         M38.N       M34.N       M32.N       M31.N                                      MH9       : M HUNDRED 9
:  H060.1      H13C.3      H13C.2      H13C.1      H13C.0                                     H060.6    :  2308  8810
8 *---] [-------] [-------]/[-------]/[-------] [-----------------------------------------------( )---*
:    M  1        X163        X162        X161        X160                                    M  6      :
:    2306        617         616         615         614                                     # 144     :
```

DRN. BY. K.MIURA	TITLE.	CONTROL.
DATE. 1.31.1986	V9C15/40	MAZATROL CAM M-2
CHK'D BY. T.HIRATA	YM2B453G	DRAWING NO.
DATE. 1.31.1986		4241681801G
APPR'D BY. M.MURASE	SEQUENCE DIAGRAM	
DATE. 1.31.1986		SHEET. 23 OF. 103

REV.	DATE.	NAME.

YAMAZAKI MAZAK CORPORATION

```
  : SF                                                                                  +-------+ : S FUNCTION PULSE
  :   H079.3                                                                          I PLS   I :   2401
1 *--] [-------------------------------------------------------------------------------I M  2  I-*
  :   M203                                                                            I H060.2I :
  :   2103                                                                            +-------+ :
  : MFP        M28.N      M24.N      M22.N      M21.N                                 MT0       : M TEN.S 0
  :   H060.1   H135.7     H135.6     H135.5     H135.4                                H062.4    :   2204  2402  2506  2507
2 *--] [-------]/[-------]/[-------]/[-------]/[-------------------------------------( )-----*   2513  2601  2803  3705
  :   M 1      X12F       X12E       X12D       X12C                                  M 20      :   3706  3707  4403
  :   2306     605        604        603        602                                   # 152     :
  : MFP        M28.N      M24.N      M22.N      M21.N                                 MT1       : M TEN.S 1
  :   H060.1   H135.7     H135.6     H135.5     H135.4                                H062.5    :   2403  2805  2905 *2905
3 *--] [-------]/[-------]/[-------]/[-------]/[-------------------------------------( )-----*   2909
  :   M 1      X12F       X12E       X12D       X12C                                  M 21      :
  :   2306     605        604        603        602                                   # 158     :
  : MFP        M28.N      M24.N      M22.N      M21.N                                 MT2       : M TEN.S 2
  :   H060.1   H135.7     H135.6     H135.5     H135.4                                H062.6    :   2404  3708 *4503  4503
4 *--] [-------]/[-------]/[-------]/[-------]/[-------------------------------------( )-----*
  :   M 1      X12F       X12E       X12D       X12C                                  M 22      :
  :   2306     605        604        603        602                                   # 164     :
  : MFP        M28.N      M24.N      M22.N      M21.N                                 MT3       : M TEN.S 3
  :   H060.1   H135.7     H135.6     H135.5     H135.4                                H062.7    :   2405  4002  4003  4203
5 *--] [-------]/[-------]/[-------]/[-------] [-------------------------------------( )-----*   4403  5004  6001
  :   M 1      X12F       X12E       X12D       X12C                                  M 23      :
  :   2306     605        604        603        602                                   # 170     :
  : MFP        M28.N      M24.N      M22.N      M21.N                                 MT4       : M TEN.S 4
  :   H060.1   H135.7     H135.6     H135.5     H135.4                                H063.0    :   2406  3504  3505  3506
6 *--] [-------]/[-------] [-------]/[-------]/[-------------------------------------( )-----*   3507 *3507
  :   M 1      X12F       X12E       X12D       X12C                                  M 24      :
  :   2306     605        604        603        602                                   # 176     :
  : MFP        M28.N      M24.N      M22.N      M21.N                                 MT5       : M TEN.S 5
  :   H060.1   H135.7     H135.6     H135.5     H135.4                                H063.1    :   2407  3708  3801  3802
7 *--] [-------]/[-------] [-------] [-------]/[-------------------------------------( )-----*   3803  3804  4202  4708
  :   M 1      X12F       X12E       X12D       X12C                                  M 25      : *4708  4808
  :   2306     605        604        603        602                                   # 182     :
  : MFP        M28.N      M24.N      M22.N      M21.N                                 MT6       : M TEN.S 6
  :   H060.1   H135.7     H135.6     H135.5     H135.4                                H063.2    :   2408  9305  9401  9402
8 *--] [-------]/[-------] [-------] [-------]/[-------------------------------------( )-----*   9403  9404  9405
  :   M 1      X12F       X12E       X12D       X12C                                  M 26      :
  :   2306     605        604        603        602                                   # 188     :
  : MFP        M28.N      M24.N      M22.N      M21.N                                 MT7       : M TEN.S 7
  :   H060.1   H135.7     H135.6     H135.5     H135.4                                H063.3    :   2409  9406  9407
9 *--] [-------]/[-------] [-------] [-------] [-------------------------------------( )-----*
  :   M 1      X12F       X12E       X12D       X12C                                  M 27      :
  :   2306     605        604        603        602                                   # 194     :
  : MFP        M28.N      M24.N      M22.N      M21.N                                 MT8       : M TEN.S 8
  :   H060.1   H135.7     H135.6     H135.5     H135.4                                H063.4    :   2410
10 *--] [-------] [-------]/[-------]/[-------]/[-------------------------------------( )-----*
  :   M 1      X12F       X12E       X12D       X12C                                  M 28      :
  :   2306     605        604        603        602                                   # 200     :
  : MFP        M28.N      M24.N      M22.N      M21.N                                 MT9       : M TEN.S 9
  :   H060.1   H135.7     H135.6     H135.5     H135.4                                H063.5    :   2411  4205 *4205  4206
11 *--] [-------] [-------]/[-------]/[-------]/[-------------------------------------( )-----*  *4206
  :   M 1      X12F       X12E       X12D       X12C                                  M 29      :
  :   2306     605        604        603        602                                   # 206     :
  : M18.N      M14.N      M12.N      M11.N                                            MU0       : M UNIT 0
  :   H135.3   H135.2     H135.1     H135.0                                           H061.2    :   2204  2412  3708 *4205
12 *--]/[-------]/[-------]/[-------]/[-------------------------------------------------( )-----*  *4206  4403  4405
  :   X12B     X12A       X129       X128                                             M 10      :
  :   601      520        519        518                                              # 211     :
  : M18.N      M14.N      M12.N      M11.N                                            MU1       : M UNIT 1
  :   H135.3   H135.2     H135.1     H135.0                                           H061.3    :   2204  2413  3801  4205
13 *--]/[-------]/[-------]/[-------] [-------------------------------------------------( )-----*   4405  9305  9406
  :   X12B     X12A       X129       X128                                             M 11      :
  :   601      520        519        518                                              # 216     :
  : M18.N      M14.N      M12.N      M11.N                                            MU2       : M UNIT 2
  :   H135.3   H135.2     H135.1     H135.0                                           H061.4    :   2414  3802  4206  4403
14 *--]/[-------]/[-------] [-------]/[-------------------------------------------------( )-----*   9401  9407
  :   X12B     X12A       X129       X128                                             M 12      :
  :   601      520        519        518                                              # 221     :
  : M18.N      M14.N      M12.N      M11.N                                            MU3       : M UNIT 3
  :   H135.3   H135.2     H135.1     H135.0                                           H061.5    :   2415  2506  2513  3504
15 *--]/[-------]/[-------] [-------] [-------------------------------------------------( )-----*   3803  4002  4503
  :   X12B     X12A       X129       X128                                             M 13      :
  :   601      520        519        518                                              # 226     :
  : M18.N      M14.N      M12.N      M11.N                                            MU4       : M UNIT 4
  :   H135.3   H135.2     H135.1     H135.0                                           H061.6    :   2416  2507  2601  3505
16 *--]/[-------] [-------]/[-------]/[-------------------------------------------------( )-----*   3804  4003 *4503  9402
  :   X12B     X12A       X129       X128                                             M 14      :
  :   601      520        519        518                                              # 231     :
  : M18.N      M14.N      M12.N      M11.N                                            MU5       : M UNIT 5
  :   H135.3   H135.2     H135.1     H135.0                                           H061.7    :   2417  2803  2905  3506
17 *--]/[-------] [-------] [-------]/[-------------------------------------------------( )-----*   3708  4203  4708  9403
  :   X12B     X12A       X129       X128                                             M 15      :
  :   601      520        519        518                                              # 236     :
  : M18.N      M14.N      M12.N      M11.N                                            MU6       : M UNIT 6
  :   H135.3   H135.2     H135.1     H135.0                                           H062.0    :   2418 *2905  2909  3507
18 *--]/[-------] [-------] [-------]/[-------------------------------------------------( )-----*  *4708
  :   X12B     X12A       X129       X128                                             M 16      :
  :   601      520        519        518                                              # 241     :
  : M18.N      M14.N      M12.N      M11.N                                            MU7       : M UNIT 7
  :   H135.3   H135.2     H135.1     H135.0                                           H062.1    :   2419 *3507  3706
19 *--]/[-------] [-------] [-------] [-------------------------------------------------( )-----*
  :   X12B     X12A       X129       X128                                             M 17      :
  :   601      520        519        518                                              # 246     :
  : M18.N      M14.N      M12.N      M11.N                                            MU8       : M UNIT 8
  :   H135.3   H135.2     H135.1     H135.0                                           H062.2    :   2420  3707  4202  5004
20 *--] [-------]/[-------]/[-------]/[-------------------------------------------------( )-----*   6001  9404
  :   X12B     X12A       X129       X128                                             M 18      :
  :   601      520        519        518                                              # 251     :
```

REV.	DATE.	NAME.	

DRN. BY. K.MIURA	TITLE.	CONTROL.
DATE. 1.31.1986	V9C15/40	MAZATROL CAM M-2
CHK'D BY. T.HIRATA	YM2B453G	DRAWING NO.
DATE. 1.31.1986		42416818016
APPR'D BY M.MURASE	SEQUENCE DIAGRAM	
DATE. 1.31.1986		SHEET. 24 OF. 103

YAMAZAKI MAZAK CORPORATION

```
  : M18.N      M14.N      M12.N      M11.N                                                  MU9        : M UNIT 9
  :  H135.3    H135.2     H135.1     H135.0                                                  H062.3     :   2501  2805  3705  4808
1 *---] [------]/[------]/[------] [-------------------------------------------------------( )----*     :   5004  6001  9405
  :   X12B       X12A       X129       X128                                                   M 19       :
  :    601        520        519        518                                                   # 256      :
  : TFP1                                                                                      TFP        : T FUNCTION PULSE
  :  H075.3                                                                                    H060.3     :   2502  3013  3105  3106
2 *---] [---*                                                                                 ( )----*     :   3107  3108  3109  3110
  :   M171  I                    I                                                            M  3       :   3112  3113  3116
  :    6707 I                    I                                                            # 263      :
  : TFP2    I                    I                                                                       :
  :  H075.4 I                    I                                                                       :
2 *---] [---*                    *                                                                       *
  :   M172                       I                                                                       :
  :    6709                      I                                                                       :
  : TF         MG.N       TFT     I                                                                       :
  :  H079.4    H141.0     H080.3  I                                                                       :
2 *---] [------] [------]/[---*                                                                          *
  :   M204       X188       T  3                                                                         :
  :    2104       706       2505                                                                         :
  : DEN.N      TAP.N      MF                                                          +-------+ : MF TIMER
  :  H132.3    H13B.2     H079.2                                                      I  T  1 I : *2306  2503  5007
3 *---] [---*---]/[---*---] [-------------------------------------------------------I K    3I-*
  :   X113  I  X15A   I   M202                                                        I H0A0.1I :
  :    509  I   608   I    2102                                                       +-------+ :
  : MNAL>300 I          I                                                                       :
  :  H095.6  I          I                                                                       *
3 *---]/[---*           *                                                                       :
  :   M430              I                                                                       :
  :    2306             I                                                                       :
  : DEN2.N     TAP.N    I                                                                       :
  :  H132.4    H13B.2   I                                                                       *
3 *---] [------] [---*                                                                           :
  :   X114       X15A                                                                           :
  :    510       608                                                                            :
  : SF                                                                                        +-------+ : SF TIMER
  :  H079.3                                                                                   I  T  2 I :   2504
4 *---] [-------------------------------------------------------------------------------------I K    5I-*
  :   M203                                                                                    I H0A0.2I :
  :    2103                                                                                   +-------+ :
  : EQTST      TF                                                                             +-------+ : TF TIMER
  :  H07C.6    H079.4                                                                         I  T  3 I : *2502  2505  5008
5 *---] [---*---] [-------------------------------------------------------------------------I K    2I-*
  :   M230  I  M204                                                                           I H0A0.3I :
  :    6606 I   2104                                                                          +-------+ :
  : MG.N    I                                                                                           :
  :  H141.0 I                                                                                           *
5 *---] [---*                                                                                           :
  :   X188                                                                                              :
  :    706                                                                                              :
  : MH0        MT0        MU3        RCTAL2                                                 SFWCD      : SPINDLE FORWARD COMMAND
  :  H060.5    H062.4     H061.5     H06D.6                                                  H069.0     :   2506  2508  2509  2604
6 *---] [------] [------] [------]/[-------------------------------------------------------( )----*     : *2709  4801  6002
  :   M  5       M 20       M 13       M110                                                   M 72       :
  :    2307       2402       2415       4802                                                  # 285      :
  : MH0        MT0        MU4        RCTAL2                                                 SRVCD      : SPINDLE REVERSE COMMAND
  :  H060.5    H062.4     H061.6     H06D.6                                                  H069.1     :   2507  2510  2511  2604
7 *---] [------] [------] [------]/[-------------------------------------------------------( )----*     :   2709  4801  6002
  :   M  5       M 20       M 14       M110                                                   M 73       :
  :    2307       2402       2416       4802                                                  # 290      :
  : SFWCD      SFWCDAX                                                                        SFWPLS     : SPINDLE FORWARD PULSE
  :  H069.0    H067.1                                                                          H067.0     :   2508  2512
8 *---] [------]/[-------------------------------------------------------------------------( )----*
  :   M 72       M 57                                                                           M 56       :
  :    2506       2509                                                                          # 293      :
  : SFWCD                                                                                     SFWCDAX    : SPINDLE FORWARD AUX
  :  H069.0                                                                                    H067.1     : *2508  2509
9 *---] [-------------------------------------------------------------------------------------( )----*
  :   M 72                                                                                      M 57       :
  :    2506                                                                                     # 295      :
  : SRVCD      SREVCDAX                                                                       SREVPLS    : SPINDLE REVERSE PULSE
  :  H069.1    H067.3                                                                          H067.2     :   2510  2512
10 *---] [------]/[-------------------------------------------------------------------------( )----*
  :   M 73       M 59                                                                           M 58       :
  :    2507       2511                                                                          # 298      :
  : SRVCD                                                                                     SREVCDAX   : SPINDLE REVERSE AUX
  :  H069.1                                                                                    H067.3     : *2510  2511
11 *---] [-------------------------------------------------------------------------------------( )----*
  :   M 73                                                                                      M 59       :
  :    2507                                                                                     # 300      :
  : SFWPLS     TAP.N                                                                          TAPME      : TAP CYCLE MEMORY
  :  H067.0    H13B.2                                                                          H066.7     :   2512 *5005
12 *---] [---*---] [-----------------------------------------*-------------------------------( )----*
  :   M 56  I  X15A                                         I                                 M 55       :
  :    2508 I   608                                         I                                 # 309      :
  : SREVPLS  I                                              I                                            :
  :  H067.2  I                                              I                                            :
12 *---] [---*                                              *                                            *
  :   M 58                                                  I                                            :
  :    2510                                                 I                                            :
  : TAPME      SZS.M      SZS1       ZES2                   I                                            :
  :  H066.7    H000.1     H076.0     H076.1 I                                                           :
12 *---] [------]/[------]/[------]/[---*                                                              *
  :   M 55       X001       M176       M177                                                            :
  :    2512       102       4504       7402                                                            :
  : MH0        MT0        MU3                                                                    +-------+ : M03 PULSE
  :  H060.5    H062.4     H061.5                                                              I PLS  I :   2513  2602
13 *---] [------] [------] [------] [-------------------------------------------------------I M 93  I-*
  :   M  5       M 20       M 13                                                              I H06B.5I :
  :    2307       2402       2415                                                              +-------+ :
```

DRN. BY. K.MIURA	TITLE.	CONTROL.
DATE. 1.31.1986	VQC15/40	MAZATROL CAM M-2
CHK'D BY. T.HIRATA	YM2B453G	DRAWING NO.
DATE. 1.31.1986		4241681801G
APPR'D BY. M.MURASE	SEQUENCE DIAGRAM	
DATE. 1.31.1986		SHEET. 25 OF. 103

REV.	DATE.	NAME.

YAMAZAKI MAZAK CORPORATION

```
  : MH0          MT0          MU4                                                                  +-------+ : M04 PULSE
  :  H060.5      H062.4       H061.6                                                               I PLS   I :   2601  2602
1 +---] [--------] [--------] [-------------------------------------------------------------------I M 94  I-+
  :   M 5        M 20         M 14                                                                 I H06B.6I :
  :   2307       2402         2416                                                                 +-------+ :
  : M03P         *RST         M05ME        PGEND.N                                                 SRNME     : SPINDLE RUN MEMORY
  :  H06B.5      H060.0       H06A.0       H143.3                                                   H06B.7   :   2602  2604 *2706
2 +---] [---+----] [--------]/[--------]/[-------------------------------------------------------( )---+
  :   M 93   I   M  0         M 80         X19B                                                     M 95     :
  :   2513   I   2113         2803         718                                                      # 324    :
  : M04P     I                                                                                               :
  :  H06B.6  I                                                                                               :
2 +---] [---+                                                                                               :
  :   M 94   I                                                                                               :
  :   2601   I                                                                                               :
  : SRNME    I                                                                                               :
  :  H06B.7  I                                                                                               :
2 +---] [---+                                                                                               :
  :   M 95                                                                                                   :
  :   2602                                                                                                   :
  : STL.N        AUT.N        TCME                                                                 +-------+ : CYCLE START LAMP PULSE
  :  H132.1      H140.0       H074.0                                                               I PLS   I :   2603  2604
3 +---] [--------] [--------]/[-------------------------------------------------------------------I M 89  I-+
  :   X111       X180         M160                                                                 I H06B.1I :
  :   507        618          6505                                                                 +-------+ :
  : SST.B        TCME         AUT.M        TUC.M        TOUCH.N      DIHT.N                         SST       : SPINDLE START
  :  H164.0      H074.0       H047.0       H044.5       H13B.1       H13B.3                          H069.2   :   2604  2607  2809 *5311
4 +---] [--------]/[--------]/[--------]/[---+---]/[--------]/[-------------------------------------( )---+
  :   X0E0       M160         Y038         Y025       I X159         X15B                           M 74     :
  :   914        6505         2114         3412       I 607          609                            # 341    :
  : SRNME        STL.P        ORCM1.M                 I                                                       :
  :  H06B.7      H06B.1       H044.3                  I                                                       :
4 +---] [--------] [--------]/[-------------------------+                                                     :
  :   M 95       M 89         Y023                    I                                                       :
  :   2602       2603         2806                    I                                                       :
  : SFWCD                                              I                                                       :
  :  H069.0                                            I                                                       :
4 +---] [---+-------------------------------------------+                                                     :
  :   M 72   I                                                                                               :
  :   2506   I                                                                                               :
  : SRVCD    I                                                                                               :
  :  H069.1  I                                                                                               :
4 +---] [---+                                                                                               :
  :   M 73                                                                                                   :
  :   2507                                                                                                   :
  : SBKME        STL.N        SPL.N                                                                SBKMEAX   : SINGLE BLOCK MEMORY AUX
  :  H06C.0      H132.1       H132.2                                                               H068.7   :   2605 *2606 *2608
5 +---] [--------]/[--------]/[-------------------------------------------------------------------( )---+
  :   M 96       X111         X112                                                                 M 71     :
  :   2204       507          508                                                                  # 345    :
  : SSP.B        ALSSPT       ALSSP2       *RST         M05ME        AL46         SBKMEAX           ESR       : ENABLE SPINDLE RUN
  :  H164.1      H0B2.5       H072.1       H060.0       H06A.0       H0C5.6       H068.7            H069.3   :   2606  2607  2701
6 +---]/[---+----]/[--------]/[---+---] [--------]/[--------]/[--------]/[-------------------------( )---+
  :   X0E1   I   T 21         M145       I M  0         M 80         F 46         M 71             M 75     :
  :   915    I   5703         5506       I 2113         2803         5407         2605             # 355    :
  : AUT.M    I                           I                                                                  :
  :  H047.0  I                           I                                                                  :
6 +---] [---+                            +                                                                  :
  :   Y038                               I                                                                  :
  :   2114                               I                                                                  :
  : TAP.N                                I                                                                  :
  :  H13B.2                              I                                                                  :
6 +---] [-------------------------------+                                                                   :
  :   X15A                                                                                                   :
  :   608                                                                                                    :
  : TUCSS        SST          AL55         ESR          AUTPLS       MNLPLS       PGEND.P                  SSTH      : SPINDLE START COMMAND
  :  H003.2      H069.2       H0C6.7       H069.3       H063.6       H063.7       H070.3                   H069.4   :   2607  2608
7 +---]/[---+----] [---+----]/[---+---] [--------]/[--------]/[--------]/[-------------------------( )---+
  :   X01A   I   M 74     I   F 55     I   M 75         M 30         M 31         M131             M 76     :
  :   207    I   2604     I   5508     I   2606         2115         2116         4404             # 367    :
  : AUT.M    I            I TAP.N      I                                                                  :
  :  H047.0  I            I  H13B.2    I                                                                  :
7 +---] [---+            +---] [---+                                                                       :
  :   Y038                I   X15A                                                                         :
  :   2114                I   608                                                                          :
  : SSTH                  I                                                                                :
  :  H069.4               I                                                                                :
7 +---] [-------------+                                                                                     :
  :   M 76                                                                                                   :
  :   2607                                                                                                   :
  : AL55         SBKMEAX      SSTH                                                                 SMRX      : SPINDLE MOTOR RUN AUX
  :  H0C6.7      H068.7       H069.4                                                               H069.5   :   2608  2701 *2701 *2704
8 +---]/[---+----]/[--------] [-------------------------------------------------------------------( )---+   2710
  :   F 55   I   M 71         M 76                                                                 M 77     :
  :   5508   I   2605         2607                                                                 # 372    :
  : TAP:N    I                                                                                               :
  :  H13B.2  I                                                                                               :
8 +---] [---+                                                                                               :
  :   X15A                                                                                                   :
  :   608                                                                                                    :
```

REV.	DATE.	NAME.	

DRN. BY. K.MIURA	TITLE.	CONTROL.
DATE. 1.31.1986	VQC15/40	MAZATROL CAM M-2
CHK'D BY. T.HIRATA	YM2B453G	DRAWING NO.
DATE. 1.31.1986		4241681801G
APPR'D BY. M.MURASE	SEQUENCE DIAGRAM	
DATE. 1.31.1986		SHEET. 26 OF. 103

YAMAZAKI MAZAK CORPORATION

```
  : TCPRS      SMRX       ORCM1.M                                TUC.M      ESR        TOUCH.N    DIHT.N                  SMR        : SPINDLE MOTOR RUN
  :  H003.0     H069.5     H044.3                                 H044.5     H069.3     H13B.1     H13B.3                  H069.6     :   2701  2702 *2703  2704
1 #---] [---+---] [--------]/[--------------------------+---]/[--------] [--------]/[--------]/[--------------------------( )---#    :   2711  2712 *2902 *3411
  :    X018  I    M 77       Y023                       I    Y025       M 75       X159       X15B                     M 78       : *3412  5308  5906
  :    205   I    2608       2806                       I    3412       2606       607        609                      # 387      :
  : SMR      I                                          I                                                                          :
  :  H069.6  I                                          I                                                                          :
1 #---] [---#                                            #                                                                          #
  :    M 78                                             I                                                                          :
  :    2701                                             I                                                                          :
  : TCPRS      AUT.M      SJOG.B     TCME       SMRX     I                                                                          :
  :  H003.0     H047.0     H164.2     H074.0     H069.5   I                                                                          :
1 #---] [--------]/[--------] [--------]/[--------]/[---#                                                                          #
  :    X018       Y038       X0E2       M160       M 77                                                                          :
  :    205        2114       916        6505       2608                                                                          :
  : SMR                                                                                                                           : SPINDLE START LAMP
  :  H069.6                                                                                                                       :
2 #---] [-------------------------------------------------------------------------------------------------------------------( )---#
  :    M 78                                                                                                                       :
  :    2701                                                                                                                       :
  : SMR                                                                                                                           : SPINDLE STOP LAMP
  :  H069.6                                                                                                                       :
3 #---]/[-------------------------------------------------------------------------------------------------------------------( )---#
  :    M 78                                                                                                                       :
  :    2701                                                                                                                       :
  : SJOG.B     AUT.M      SMR        SMRX       M55ME                                                                          : SPINDLE JOG LAMP
  :  H164.2     H047.0     H069.6     H069.5     H06D.7                                                                         :   2704  2710  2809
4 #---] [--------]/[--------] [--------]/[--------]/[-------------------------------------------------------------------( )---#
  :    X0E2       Y038       M 78       M 77       M111                                                                          :
  :    916        2114       2701       2608       4708                                                                          :
  : SFR.M                                                                                                                         : SPINDLE MOTOR RUN
  :  H041.0                                                                                                                       :   2705  2902 *3407  4710
5 #---] [---+-------------------------------------------------------------------------------------------------------------( )---#    :   4711  4801 *4802
  :    Y008  I                                                                                                                    :
  :    2711  I                                                                                                                    :
  : SRU.M    I                                                                                                                    :
  :  H041.1  I                                                                                                                    :
5 #---] [---#                                                                                                                     #
  :    Y009                                                                                                                       :
  :    2712                                                                                                                       :
  : SREV.B     SCAN       AUT.M      SRNME                                                                                       : REVERSE PULSE
  :  H164.3     H06F.3     H047.0     H06B.7                                                                                      :   2706  2708  2709
6 #---] [--------]/[--------]/[--------]/[-------------------------------------------------------------------------------( )---#
  :    X0E3       M123       Y038       M 95                                                                                      :
  :    917        2707       2114       2602                                                                                      :
  : SREV.B                                                                                                                        : SCAN PULSE MAKE
  :  H164.3                                                                                                                       : *2706  2707
7 #---] [-------------------------------------------------------------------------------------------------------------------( )---#
  :    X0E3                                                                                                                       :
  :    917                                                                                                                        :
  : REVP       FFREV1                                                                                                             : FLIP FLOP REVERSE 2
  :  H06F.2     H06F.4                                                                                                             :   2708 *2709
8 #---] [--------] [-------------------------------------------------------------------------------------------------------( )---#
  :    M122       M124                                                                                                           :
  :    2706       2709                                                                                                           :
  : REVP       FFREV2     SFWCD                                                                                                  : FLIP FLOP REVERSE 1
  :  H06F.2     H06F.5     H069.0                                                                                                 :   2708  2709 *2711  2712
9 #---] [---+---]/[--------]/[-------------------------------------------------------------------------------------------( )---#    :   2801
  :    M122  I    M125       M 72                                                                                                   :
  :    2706  I    2708       2506                                                                                                   :
  : FFREV1   I                                                                                                                      :
  :  H06F.4  I                                                                                                                      :
9 #---] [---#                                                                                                                       #
  :    M124  I                                                                                                                      :
  :    2709  I                                                                                                                      :
  : SRVCD    I                                                                                                                      :
  :  H069.1  I                                                                                                                      :
9 #---] [---#                                                                                                                       #
  :    M 73                                                                                                                         :
  :    2507                                                                                                                         :
  : SJOG.L                                                                                                                          : SPINDLE JOG START TIMER
  :  H11A.2                                                                                                                         :   2710  2711  2712
10 #---] [---+-----------------------------------------------------------------------------------------------------------+--+--#    :
  :    Y1D2  I                                                                                                          I  T 46 I :
  :    2704  I                                                                                                          I K    II-#
  : SMRX     I                                                                                                          I H0A5.6I :
  :  H069.5  I                                                                                                          +--------+ :
10 #---] [---#                                                                                                                      #
  :    M 77                                                                                                                         :
  :    2608                                                                                                                         :
  : SJSTT      SMR        FFREV1                                                                                                 : SPINDLE FORWARD
  :  H0B5.6     H069.6     H06F.4                                                                                                 :   2705  2711
11 #---] [---+---] [--------]/[-------------------------------------------------------------------------------------------( )---#
  :    T 46  I    M 78       M124                                                                                                   :
  :    2710  I    2701       2709                                                                                                   :
  : SJOG.B   I                                                                                                                      :
  :  H164.2  I                                                                                                                      :
11 #---]/[---#                                                                                                                      #
  :    X0E2                                                                                                                         :
  :    916                                                                                                                          :
  : SJSTT      SMR        FFREV1                                                                                                 : SPINDLE REVERSE
  :  H0B5.6     H069.6     H06F.4                                                                                                 :   2705  2712
12 #---] [---+---] [--------] [-------------------------------------------------------------------------------------------( )---#
  :    T 46  I    M 78       M124                                                                                                   :
  :    2710  I    2701       2709                                                                                                   :
  : SJOG.B   I                                                                                                                      :
  :  H164.2  I                                                                                                                      :
12 #---]/[---#                                                                                                                      #
  :    X0E2                                                                                                                         :
  :    916                                                                                                                          :
```

DRN. BY. K.MIURA	TITLE.	CONTROL.
DATE. 1.31.1986	VQC15/40	MAZATROL CAM M-2
CHK'D BY. T.HIRATA	YM2B453G	DRAWING NO.
DATE. 1.31.1986		42416818016
APPR'D BY M.MURASE	SEQUENCE DIAGRAM	
DATE. 1.31.1986		SHEET. 27 OF. 103

REV. | DATE | NAME

YAMAZAKI MAZAK CORPORATION

```
  : FFREV1                                                                                  SREV.L     : SPINDLE REVERSE LAMP
  :  H06F.4                                                                                 H11A.3     :  2801
1 +---] [-------------------------------------------------------------------------------------( )---+
  :   M124                                                                                   Y1D3      :
  :   2709                                                                                   # 432     :
  : SZS.M      SMR                                                                           +-------+ : SPINDLE STOP TIMER
  :  H000.1    H069.6                                                                        I  T  4 I :  2802 #2803
2 +---] [-----]/[-------------------------------------------------------------------------I K    5I-+
  :   X001     M 78                                                                          I H0A0.4I :
  :    102     2701                                                                          +-------+ :
  : MH0        MT0          MU5                                                              M05ME     : M05 MEMORY
  :  H060.5    H062.4       H061.7                                                            H06A.0    : #2602 #2606  2803 #5005
3 +---] [-----] [-----] [---+                                                                  ( )---+
  :   M 5      M 20         M 15  I                                                            M 80     :
  :   2307     2402         2417  I                                                            # 444    :
  : M05ME      SSPT                I                                                                     :
  :  H06A.0    H0B0.4              I                                                                     :
3 +---] [---+---]/[-----------+                                                                          :
  :   M 80  I  T  4                                                                                     :
  :   2803  I  2802                                                                                     :
  : SSP.N   I                                                                                           :
  :  H13B.0 I                                                                                           :
3 +---] [---+                                                                                           :
  :   X158                                                                                              :
  :    606                                                                                              :
  : MOP6AX                                                                                  GSH.N      : GEAR HIGH SIGNAL N/C
  :  H07F.7                                                                                 H104.0     :  2804
4 +---] [---+-------------------------------------------------------------------------------( )---+
  :   M255  I                                                                                  Y120      :
  :   6001  I                                                                                  # 447     :
  : MOP6AX  I                                                                                            :
  :  H07F.7 I                                                                                            :
4 +---]/[---+                                                                                            :
  :   M255                                                                                               :
  :   6001                                                                                               :
  : SOME2      SOSA                 *RST                                                         SOME2      : SPINDLE ORIENT MEMORY 2
  :  H06B.2    H06B.4               H060.0                                                       H06B.2     :  2805  2806 #5005 #5311
5 +---] [-----]/[-----------+---] [-------------------------------------------------------------( )---+
  :   M 90     M 92         I   M  0                                                             M 90     :
  :   2805     5408         I   2113                                                             # 456    :
  : MH0        MT1          MU9 I                                                                         :
  :  H060.5    H062.5       H062.3 I                                                                      :
5 +---] [-----] [-----] [---+                                                                            :
  :   M 5      M 21         M 19  I                                                                       :
  :   2307     2403         2501  I                                                                       :
  : RCTSTEP2                      I                                                                       :
  :  H06D.4                       I                                                                       :
5 +---] [-----------------------+                                                                         :
  :   M108                                                                                               :
  :   4711                                                                                               :
  : TCME       EQTST        TOUCH.N      DIHT.N       AL45         UOME2        AL46         PGEND.P      ORCM1.M    : SPINDLE ORIENT COMMAND
  :  H074.0    H07C.6       H13B.1       H13B.3       H0C5.5       H06B.3       H0C5.6       H070.3       H044.3     : #2604 #2701  2806 #5402
6 +---] [-----]/[---+---]/[-----]/[---+---]/[-----]/[---+---]/[-----]/[-----]/[-----]/[-----]/[-----( )---+  5403  5408 10211
  :   M160     M230 I   X159         X15B I   F 45 I   M 91         F 46         M131         Y023      :
  :   6505     6606 I   607          609  I   5406 I   2809         5407         4404         # 469     :
  : SOME2           I                     I RST.N  I                                                      :
  :  H06B.2         I                     I H133.2 I                                                      :
6 +---] [-----------+                     +---]/[---+                                                      :
  :   M 90                                I   X11A                                                        :
  :   2805                                I    513                                                        :
  : ORCM1.M                               I                                                               :
  :  H044.3                               I                                                               :
6 +---] [-----------------------------------+                                                             :
  :   Y023                                                                                               :
  :   2806                                                                                               :
  : ORA1                                                                                    +-------+ : SPINDLE ORIENT TIMER
  :  H000.3                                                                                 I  T  6 I :  2807 #4711
7 +---] [-------------------------------------------------------------------------------I K    3I-+
  :   X003                                                                                  I H0A0.6I :
  :    104                                                                                  +-------+ :
  : TCME                                                                                    +-------+ : ATC FIN PULSE
  :  H074.0                                                                                 I PLS   I :  2808  2809  4101
8 +---]/[-------------------------------------------------------------------------------I M152  I-+
  :   M160                                                                                  I H073.0I :
  :   6505                                                                                  +-------+ :
  : SOSA       UOME2                *RST                                                     UOME2      : SPINDLE UNORIENT MEMORY 2
  :  H06B.4    H06B.3               H060.0                                                   H06B.3     : #2806  2809 #5005 #5311
9 +---] [-----] [-----------+---] [-------------------------------------------------------( )---+
  :   M 92     M 91         I   M  0                                                             M 91     :
  :   5408     2809         I   2113                                                             # 486    :
  : AFINPLS    MDI.L        TOUCH.N      DIHT.N       I                                                     :
  :  H073.0    H118.1       H13B.1       H13B.3       I                                                     :
9 +---] [-----]/[---+---]/[-----]/[---+                                                                  :
  :   M152     Y1C1 I       X159         X15B                                                              :
  :   2808     8707 I       607          609                                                               :
  : SST             I                                                                                      :
  :  H069.2         I                                                                                      :
9 +---] [---+-------+                                                                                    :
  :   M 74  I                                                                                            :
  :   2604  I                                                                                            :
  : PGEND.P I                                                                                            :
  :  H070.3 I                                                                                            :
9 +---] [---+                                                                                            :
  :   M131  I                                                                                            :
  :   4404  I                                                                                            :
  : SJOG.L  I                                                                                            :
  :  H11A.2 I                                                                                            :
9 +---] [---+                                                                                            :
  :   Y1D2                                                                                               :
  :   2704                                                                                               :
```

DRN. BY. K.MIURA	TITLE.	CONTROL.
DATE. 1.31.1986	V0C15/40	MAZATROL CAM M-2
CHK'D BY. T.HIRATA	YM2B453G	DRAWING NO.
DATE. 1.31.1986		4241681801G
APPR'D BY. M.MURASE	SEQUENCE DIAGRAM	
DATE. 1.31.1986		SHEET. 29 OF. 103

REV	DATE.	NAME.

YAMAZAKI MAZAK CORPORATION

```
  : SZS.M      10000S                                                                  +-------+ :
  :  H000.1     H096.4                                                                 I  T 60 I :  2901 *2902
1 +---] [-------] [-----------------------------------------------------------------I K  100I-+
  :   X001      M436                                                                   I H0A7.4I :
  :    102      2901                                                                   +-------+ :
  : SMR.M                  10000S                                                      SCAB.M   : SPINDLE MOTOR COOLING AIR
  :  H041.2     H0B7.4      H096.4                                                      H041.3  :  2902
2 +---] [---+---]/[-------] [---+-------------------------------------------------------( )---+
  :   Y00A  I   T 60        M436  I                                                     Y00B   :
  :   2705  I   2901        2901  I                                                    # 498   :
  : SCAB.M  I                     I                                                            :
  :  H041.3 I                     I                                                            :
2 +---] [---+                     +                                                            +
  :   Y00B                        I                                                            :
  :   2902                        I                                                            :
  : THC.M      2NDABS             I                                                            :
  :  H042.2     H094.2             I                                                            :
2 +---] [-------] [-------------+                                                              +
  :   Y012      M418                                                                           :
  :   3807      2902                                                                           :
  : STL.N      AUT.N                                                                   +-------+ : CYCLE START TIMER
  :  H132.1     H140.0                                                                 I  T 33 I :  2903 2904
3 +---] [-------] [-----------------------------------------------------------------I K    4I-+
  :   X111      X180                                                                   I H0A4.1I :
  :    507       618                                                                   +-------+ :
  : STLT                                                                               +-------+ : CYCLE START LAMP TIMER PULSE
  :  H0B4.1                                                                            I PLS   I :  2904 2905
4 +---] [-----------------------------------------------------------------------------I M130  I-+
  :   T 33                                                                             I H070.2I :
  :   2903                                                                             +-------+ :
  : MH0        MT1         MU5         MT1         MGCCRS      MGCORS                  MGCCME   : MAGAZINE COVER CLOSE MEMORY
  :  H060.5     H062.5      H061.7      H062.5      H00A.3      H00A.2                   H074.2  :  2905 2906 *2910
5 +---] [-------] [-------] [-------+---]/[-------+---] [-------]/[-------+-------------( )---+
  :   M  5      M 21        M 15  I   M 21      I   X053      X052      I                M162   :
  :   2307      2403        2417  I   2403      I   404       403       I                # 525  :
  : MZPAX      MZP                 I MU6       I *RST                  I                       :
  :  H065.2     H065.1              I  H062.0   I  H060.0               I                       :
5 +---]/[-------] [-------------+---]/[-------+---] [-------+                                   +
  :   M 42      M 41                I   M 16    I   M  0    I                                   :
  :   2907      2908                I   2418    I   2113    I                                   :
  : STLT.P     MGCOME3             I MH0       I PGEND.N   I                                   :
  :  H070.2     H066.4              I  H060.5   I  H143.3   I                                   :
5 +---] [-------]/[-------------+---]/[-------+---] [-------+                                   +
  :   M130      M 52                I   M  5      I     718   I                                   :
  :   2904      2910                I   2307       X19B   I                                   :
  : MGCCME                          I            CYFIN.M   I                                   :
  :  H074.2                         I             H048.2   I                                   :
5 +---] [-----------------------+                            +                                   +
  :   M162                                        Y042                                         :
  :   2905                                        4405                                         :
  : MGCCME     MGCOME1                                                                 MGC.M    : MAGAZINE COVER CLOSE
  :  H074.2     H074.1                                                                 H044.6  :  2906 *5802 5802 *5804
6 +---] [-------]/[-----------------------------------------------------------------( )---+  5805 5806 *5808 *7103
  :   M162      M161                                                                   Y026   :
  :   2905      6607                                                                   # 528  :
  : MZP                                                                                MZPAX    : MACHINE ZERO POSITION AX
  :  H065.1                                                                            H065.2  : *2905 2907
7 +---] [-----------------------------------------------------------------------------( )---+
  :   M 41                                                                             M 42   :
  :   2908                                                                             # 530  :
  : ZP41.N     ZPX1.N      ZPY1.N      ZPZ1.N      HYD.M                                MZP      : MACHINE ZERO POSITION
  :  H130.3     H130.0      H130.1      H130.2      H044.4                               H065.1  :  2905 2907 2908 *6103
8 +---] [---+---] [-------] [-------] [-------+---] [-----------------------------------( )---+  7604 7605 7606
  :   X103  I   X100        X101        X102  I   Y024                                   M 41   :
  :    503  I    420         501         502  I   2302                                  # 538  :
  : NCROTS  I                                  I                                                :
  :  H094.4 I                                  I                                                :
8 +---]/[---+                                  +                                                +
  :   M420                                     I                                                :
  :   2908                                     I                                                :
  : MZP                                        I                                                :
  :  H065.1                                    I                                                :
8 +---] [-----------------------------------+                                                  +
  :   M 41                                                                                     :
  :   2908                                                                                     :
  : MH0        MT1         MU6         *RST                                                MGCOME2  : MAGAZINE COVER OPEN MEMORY 2
  :  H060.5     H062.5      H062.0      H060.0                                               H065.7  :  2909 2910 *5006
9 +---] [-------] [-------] [-------+---] [-----------------------------------------------( )---+
  :   M  5      M 21        M 16  I   M  0                                                 M 47   :
  :   2307      2403        2418  I   2113                                                # 546  :
  : MGCOME2    MGCORS              I                                                            :
  :  H065.7     H00A.2              I                                                            :
9 +---] [-------]/[-------------+                                                              +
  :   M 47      X052                                                                           :
  :   2909       403                                                                           :
  : MGCOME3    *RST        AUT.M       MGCCME                                              MGCOME3  : MAGAZINE COVER OPEN MAMORY 3
  :  H066.4     H060.0      H047.0      H074.2                                               H066.4  : *2905 2910
10 +---] [-------] [-------] [-------]/[-------+-----------------------------------------( )---+
  :   M 52      M  0        Y038        M162  I                                             M 52   :
  :   2910      2113        2114        2905  I                                            # 552  :
  : MGCOME2                                   I                                                :
  :  H065.7                                   I                                                :
10 +---] [-----------------------------------+                                                  +
  :   M 47                                                                                     :
  :   2909                                                                                     :
  : ARETRS     AEXTRS                                                                  MARETL   : MEASURING ARM RET. LIMIT
  :  H004.7     H004.6                                                                 H08D.3  :  2911 3806 3807 3808
11 +---] [-------]/[-----------------------------------------------------------------( )---+  3809 3810 *4008 *4103
  :   X027      X026                                                                   M363   :  6803 6811 7006
  :    214       213                                                                   # 555  :
```

REV.	DATE.	NAME.	

DRN. BY. K.MIURA	TITLE.	CONTROL.
DATE. 1.31.1986	VQC15/40	MAZATROL CAM M-2
CHK'D BY. T.HIRATA	YM2B453G	DRAWING NO.
DATE. 1.31.1986		4241681801G
APPR'D BY. M.MURASE	SEQUENCE DIAGRAM	
DATE. 1.31.1986		SHEET. 29 OF. 103

YAMAZAKI MAZAK CORPORATION

```
  : TSINTSS    MNTS        PTX         AUT.M       *ESP.M                                                  MNTS      : MANUAL TOOL SELECT
  :  H003.3    H065.3      H078.6      H047.0      H000.0                                                   H065.3   :  3001  3202  3303
1 +---] [----+---] [--------] [----+---]/[--------] [-------------------------------------------------------( )----+
  :   X01B  I   M 43        M198  I   Y038        X000                                                      M 43    :
  :    208  I   3001        3012  I   2114        101                                                       # 565   :
  : TSINTLS I TSPB                I                                                                                   :
  :  H008.3 I  H000.7             I                                                                                   :
1 +---] [----+---] [----------+                                                                                        :
  :   X043  I   X007                                                                                                   :
  :    317  I    108                                                                                                   :
  : DITLS   I                                                                                                          :
  :  H093.3 I                                                                                                          :
1 +---]/[----+                                                                                                         :
  :   M411                                                                                                             :
  :   3001                                                                                                             :
  : T11P.M                                                                                                             :
  :  H001.0                                                                                                  TNPS1     : TOOL NO. POSITION SENSOR 1
2 +---] [-------------------------------------------------------------------------------------------------( )----+  :  3002 *3103
  :   X008                                                                                                    H07B.0   :
  :    109                                                                                                     M216    :
  : T12P.M                                                                                                    # 567   :
  :  H001.0                                                                                                  TNPS2     : TOOL NO. POSITION SENSOR 2
3 +---] [-------------------------------------------------------------------------------------------------( )----+  :  3003 *3103
  :   X009                                                                                                    H07B.1   :
  :    110                                                                                                     M217    :
  : T14P.M                                                                                                    # 569   :
  :  H001.2                                                                                                  TNPS3     : TOOL NO. POSITION SENSOR 3
4 +---] [-------------------------------------------------------------------------------------------------( )----+  :  3004 *3103
  :   X00A                                                                                                    H07B.2   :
  :    111                                                                                                     M218    :
  : T18P.M                                                                                                    # 571   :
  :  H001.3                                                                                                  TNPS4     : TOOL NO. POSITION SENSOR 4
5 +---] [-------------------------------------------------------------------------------------------------( )----+  :  3005 *3103
  :   X00B                                                                                                    H07B.3   :
  :    112                                                                                                     M219    :
  : T21P.M                                                                                                    # 573   :
  :  H001.4                                                                                                  TNPS5     : TOOL NO. POSITION SENSOR 5
6 +---] [-------------------------------------------------------------------------------------------------( )----+  :  3006
  :   X00C                                                                                                    H07B.4   :
  :    113                                                                                                     M220    :
  : MIPRS      PON1.M      PON2.M      30TS                                                                   # 575   :
  :  H001.5    H008.0      H008.1      H092.3                                                                 STLX      : CYCLE START LAMP AUX.
7 +---] [--------] [--------] [--------] [-------------------------------------------------------------------( )----+  :  3007  3012  3301 *3303
  :   X00D      X040        X041        M403                                                                   H078.7   :
  :    114       314        315         3007                                                                    M199    :
  : PON1.M     MGCOME4                                                                                         # 580   :
  :  H008.0    H075.2                                                                                                    :
8 +---] [--------]/[-------------------------------------------------------------------------------------------( )----+  :  3008  3009  3012
  :   X040      M170                                                                                                   H081.5   :
  :    314      3009                                                                                                    M269    :
  :                                                                                                                    # 583   :
  :  H081.5                                                                                                  MGCOME4   : MAGAZINE COVER OPEN MEMORY
9 +---] [-------------------------------------------------------------------------------------------------( )----+  :  *3008  3009
  :   M269                                                                                                    H075.2   :
  :   3008                                                                                                     M170    :
  : MIPRS      ENAEXT                                                                                          # 585   :
  :  H001.5    H076.4                                                                                                    :
10 +---] [--------]/[-------------------------------------------------------------------------------------------( )----+  :  3010  3011  3012
  :   X00D      M180                                                                                                   H081.6   :
  :    114      3011                                                                                                    M270    :
  :                                                                                                                    # 588   :
  :  H081.6                                                                                                  ENAEXT    : ENABLE MEASURING ARM EXTEND
11 +---] [-------------------------------------------------------------------------------------------------( )----+  :  *3010  3011
  :   M270                                                                                                    H076.4   :
  :   3010                                                                                                     M180    :
  : MIPRS      30TS                                                                                            # 590   :
  :  H001.5    H092.3                                                                                                    : PATO LIGHT AUX.
12 +---] [--------]/[----------+                                                                                 PTX      :  3001  3012  3101  3103
  :   X00D      M403           I                                                                                 H078.6   :  3210  3301 *3303  3304
  :    114      3007           I                                                                                 ( )----+  :  *3306 *5106
  : MFWD.M     PON1.M      15TS        I                                                                        M198    :
  :  H040.3    H008.0      H092.0      I                                                                        # 606   :
12 +---] [----+---] [--------] [----+                                                                                    :
  :   Y003  I   X040        M400  I                                                                                      :
  :   3308  I    314        3012  I                                                                                      :
  : MREV.M  I                      I                                                                                      :
  :  H040.2 I                      I                                                                                      :
12 +---] [----+                    +                                                                                      :
  :   Y002                         I                                                                                      :
  :   3309                         I                                                                                      :
  : MFWD.M                30TS     I                                                                                      :
  :  H040.3    H081.5      H092.3  I                                                                                      :
12 +---] [--------] [----+---] [----+                                                                                    :
  :   Y003      M269  I   M403     I                                                                                      :
  :   3308      3008  I   3007     I                                                                                      :
  : MREV.M            I            I                                                                                      :
  :  H040.2    H081.6 I            I                                                                                      :
12 +---] [--------] [----+          +                                                                                      :
  :   Y002      M270               I                                                                                      :
  :   3309      3010               I                                                                                      :
  : STLX                           I                                                                                      :
  :  H078.7                        I                                                                                      :
12 +---] [----------------------+                                                                                        :
  :   M199                                                                                                                 :
  :   3007                                                                                                                 :
  : TFP                                                                                                                    :
  :  H060.3                                                                                                  +-------+ :
13 +---] [-------------------------------------------------------------------------------------------------I PLS   I :  3013  3111
  :   M 3                                                                                                    I M143  I-+
  :   2502                                                                                                   I H071.7I :
                                                                                                             +-------+ :
```

				DRN. BY. K.MIURA	TITLE.	CONTROL.
				DATE. 1.31.1986	VQC15/40	MAZATROL CAM M-2
				CHK'D BY. T.HIRATA	YM2B453G	DRAWING NO.
				DATE. 1.31.1986		42416818016
				APPR'D BY. M.MURASE	SEQUENCE DIAGRAM	
				DATE. 1.31.1986		SHEET. 30 OF. 103
REV.	DATE.	NAME.		YAMAZAKI MAZAK CORPORATION		

```
  : PTX                                                                          +-------+ :
  :  H078.6                                                                      I MOV   I :
1 *---] [---*-------------------------------------------------------------------I K2M216I-*
  :   M198  I                                                                    I   D 8I :
  :   3012  I                                                                    +-------+ :
  : MIPRS   I                                                                              :
  :  H001.5 I                                                                              :
1 *---] [---*                                                                              *
  :   X00D  I                                                                              :
  :    114  I                                                                              :
  : PON1.M  I                                                                              :
  :  H008.0 I                                                                              :
1 *---] [---*                                                                              *
  :   X040                                                                                 :
  :    314                                                                                 :
  : TSME                                                                         +-------+ :
  :  H064.1                                                                      I MOV   I :
2 *---] [-------------------------------------------------------------------------I   D 8I-*
  :   M 33                                                                       I   D 10I :
  :   3303                                                                       +-------+ :
  : PTX        TSME       TNPS1      TNPS2      TNPS3      TNPS4      30TS        +-------+ :
  :  H078.6    H064.1     H07B.0     H07B.1     H07B.2     H07B.3     H092.3      I MOV   I :
3 *---] [-------]/[-------]/[-------]/[-------]/[-------]/[-------]/[-----------I K   16I-*
  :   M198     M 33       M216       M217       M218       M219       M403        I   D 10I :
  :   3012     3303       3002       3003       3004       3005       3007        +-------+ :
  : TSME                                                                         +-------+ :
  :  H064.1                                                                      I MOV   I :
4 *---] [-------------------------------------------------------------------------I   D 10I-*
  :   M 33                                                                       I   D 12I :
  :   3303                                                                       +-------+ :
  : TFP                                                                          +-------+ :
  :  H060.3                                                                      I MOV   I :
5 *---] [-------------------------------------------------------------------------I K2X140I-*
  :   M 3                                                                        I   D 3I :
  :   2502                                                                       +-------+ :
  : TFP                                                                          +-------+ :
  :  H060.3                                                                      I MOV   I :
6 *---] [-------------------------------------------------------------------------I K2X168I-*
  :   M 3                                                                        I   D 4I :
  :   2502                                                                       +-------+ :
  : LOADT      TFP                                                               +-------+ :
  :  H075.6    H060.3                                                            I MOV   I :
7 *---] [-------] [-----------------------------------------------------------------I   D 3I-*
  :   M174     M 3                                                               I   D 11I :
  :   6901     2502                                                              +-------+ :
  : UNLOADT    TFP                                                               +-------+ :
  :  H075.7    H060.3                                                            I MOV   I :
8 *---] [-------] [-----------------------------------------------------------------I   D 4I-*
  :   M175     M 3                                                               I   D 11I :
  :   6802     2502                                                              +-------+ :
  : TFP                                                                          +-------+ :
  :  H060.3                                                                      I BIN   I :
9 *---] [-------------------------------------------------------------------------I   D 11I-*
  :   M 3                                                                        I   D 13I :
  :   2502                                                                       +-------+ :
  : TFP                                                                          +-------+ :
  :  H060.3                                                                      I BIN   I :
10 *---] [------------------------------------------------------------------------I   D 11I-*
  :   M 3                                                                        I   D 14I :
  :   2502                                                                       +-------+ :
  :                                                                              +-------+ :
  :  H071.7                                                                      I BIN   I :
11 *---] [------------------------------------------------------------------------I   D 11I-*
  :   M143                                                                       I   D 30I :
  :   3013                                                                       +-------+ :
  : TFP                                                                          +-------+ :
  :  H060.3                                                                      I BIN   I :
12 *---] [------------------------------------------------------------------------I   D 11I-*
  :   M 3                                                                        I   D 15I :
  :   2502                                                                       +-------+ :
  : TFP        +-------+                                                         GRTCD     : GREATER THAN COMMAND
  :  H060.3    I <   I                                                            H07C.0   :   3113  3116  3117 *3118
13 *---] [-------I   D 12I-----------------------------------------------------------( )---*  *3201  3202 *3202  3203
  :   M 3      I   D 15I                                                           M224    :  *3203
  :   2502     +-------+                                                          # 671    :
  : MA.N       30TS                                                              +-------+ :
  :  H133.0    H092.3                                                            I MOV   I :
14 *---] [-------]/[-----------------------------------------------------------I K    9I-*
  :   X118     M403                                                              I   D 16I :
  :    511     3007                                                              +-------+ :
  : MA.N       30TS                                                              +-------+ :
  :  H133.0    H092.3                                                            I MOV   I :
15 *---] [-------] [-----------------------------------------------------------I K   16I-*
  :   X118     M403                                                              I   D 16I :
  :    511     3007                                                              +-------+ :
  : TFP        GRTCD                                                             +-------+ :
  :  H060.3    H07C.0                                                            I -     I :
16 *---] [-------] [-----------------------------------------------------------------I   D 12I-*
  :   M 3      M224                                                              I   D 13I :
  :   2502     3113                                                              +-------+ :
  : TFP        GRTCD      +-------+                                              MRF       : MAGAZINE FORWARD
  :  H060.3    H07C.0     I >   I                                                H07C.1   :   3117  3202 *3203
17 *---] [-------] [-------I   D 16I-----------------------------------------------( )---*
  :   M 3      M224       I   D 13I                                               M225    :
  :   2502     3113       +-------+                                              # 692    :
  : TFP        GRTCD                                                             +-------+ :
  :  H060.3    H07C.0                                                            I -     I :
18 *---] [-------]/[-----------------------------------------------------------------I   D 15I-*
  :   M 3      M224                                                              I   D 12I :
  :   2502     3113                                                              +-------+ :
```

DRN. BY. K.MIURA	TITLE.	CONTROL.
DATE. 1.31.1986	V0C15/40	MAZATROL CAM M-2
CHK'D BY. T.HIRATA	YM2B453G	DRAWING NO.
DATE. 1.31.1986		42416818016
APPR'D BY M.MURASE	SEQUENCE DIAGRAM	
DATE. 1.31.1986		SHEET. 31 OF. 103

REV.	DATE.	NAME.

YAMAZAKI MAZAK CORPORATION

```
  : TFP        GRTCD      +-------+                                                          MRR      : MAGAZINE REVERSE
  :  H060.3     H07C.0    I  >    I                                                           H07C.2  :   3201 *3202  3203
1 *---] [-------]/[-------I   D 16I-----------------------------------------------------------( )---*
  :   M 3       M224      I   D 12I                                                            M226   :
  :  2502       3113      +-------+                                                            # 703   :
  : GRTCD      MRF        TFP          TSME       MOP13                                       FWDME    : MAGAZINE FORWARD MEMORY
  :  H07C.0     H07C.1     H060.3       H064.1     HOCB.4                                      H07C.4  :   3202  3204  3302  3308
2 *---] [-------] [-----*---] [-----*---] [-------]/[-----------------------------------------( )---*
  :   M224      M225  I   M 3     I   M 33       F 92                                          M228   :
  :   3113      3117  I   2502    I   3303       6106                                          # 716   :
  : GRTCD      MRR        I                      I                                                    :
  :  H07C.0     H07C.2    I                      I                                                    :
2 *---]/[-------]/[-----*                        *                                                    *
  :   M224      M226                             I                                                    :
  :   3113      3201                             I                                                    :
  : TFP        FWDME                             I                                                    :
  :  H060.3     H07C.4                           I                                                    :
2 *---]/[-------] [-----------------------------*                                                    *
  :   M 3       M228                             I                                                    :
  :  2502       3202                             I                                                    :
  : MNTS                                         I                                                    :
  :  H065.3                                      I                                                    :
2 *---] [-------------------------------------*                                                      *
  :   M 43                                                                                            :
  :   3001                                                                                            :
  : GRTCD      MRF        TFP          TSME       MOP13                                       REVME    : MAGAZINE REVERSE MEMORY
  :  H07C.0     H07C.1     H060.3       H064.1     HOCB.4                                      H07C.5  :   3203  3205  3302  3309
3 *---] [-------]/[-----*---] [-----*---] [-------]/[-----------------------------------------( )---*
  :   M224      M225  I   M 3     I   M 33       F 92                                          M229   :
  :   3113      3117  I   2502    I   3303       6106                                          # 728   :
  : GRTCD      MRR        I                      I                                                    :
  :  H07C.0     H07C.2    I                      I                                                    :
3 *---]/[-------] [-----*                        *                                                    *
  :   M224      M226                             I                                                    :
  :   3113      3201                             I                                                    :
  : TFP        REVME                             I                                                    :
  :  H060.3     H07C.5                           I                                                    :
3 *---]/[-------] [-----------------------------*                                                    *
  :   M 3       M229                                                                                  *
  :  2502       3203                                                                                  :
  : FWDME                                                                          +-------+ : ALARM GEAR SHIFT 1
  :  H07C.4                                                                        I PLS   I :   3204  3206  3208
4 *---] [-------------------------------------------------------------------------I M138  I-*
  :   M228                                                                         I H071.2I :
  :   3202                                                                         +-------+ :
  : REVME                                                                          +-------+ : ALARM GEAR SHIFT 2
  :  H07C.5                                                                        I PLS   I :   3205  3207  3209
5 *---] [-------------------------------------------------------------------------I M139  I-*
  :   M229                                                                         I H071.3I :
  :   3203                                                                         +-------+ :
  : ALGSF1     30TS                                                                +-------+ :
  :  H071.2     H092.3                                                             I -     I :
6 *---] [-------] [-------------------------------------------------------------I K    1I-*
  :   M138      M403                                                               I   D 30I :
  :   3204      3007                                                               +-------+ :
  : ALGSF2     30TS                                                                +-------+ :
  :  H071.3     H092.3                                                             I +     I :
7 *---] [-------] [-------------------------------------------------------------I K    1I-*
  :   M139      M403                                                               I   D 30I :
  :   3205      3007                                                               +-------+ :
  : ALGSF1     30TS       +-------+                                               +-------+ :
  :  H071.2     H092.3    I  =    I                                               I MOV   I :
8 *---] [-------] [-------I K    0I-----------------------------------------------I K   30I-*
  :   M138      M403      I   D 30I                                               I   D 30I :
  :   3204      3007      +-------+                                               +-------+ :
  : ALGSF2     30TS       +-------+                                               +-------+ :
  :  H071.3     H092.3    I  =    I                                               I MOV   I :
9 *---] [-------] [-------I K   31I-----------------------------------------------I K    1I-*
  :   M139      M403      I   D 30I                                               I   D 30I :
  :   3205      3007      +-------+                                               +-------+ :
  : PTX        TSME       AUT.M        +-------+                                            :
  :  H078.6     H064.1     H047.0      I  =    I                                   H079.0  :   3210  3211
10 *---] [-------] [-------] [-------I   D 30I-*-----------------------------------( )---*
  :   M198      M 33       Y038        I   D 10I I                                   M200   :
  :   3012      3303       2114        +-------+ I                                   # 768   :
  :            TSME                               I                                          :
  :  H079.0     H064.1                             I                                          :
10 *---] [-------] [-----------------------------*                                            *
  :   M200      M 33                                                                          :
  :   3210      3303                                                                          :
  : MFWD.M     MIPRS                    30TS                                                 :
  :  H040.3     H001.5     H079.0       H092.3                                      H079.6  :   3211 *3302
11 *---] [-------]/[-----*---] [-------] [-----------------------------------------( )---*
  :   Y003      X00D  I   M200       M403                                          M206   :
  :   3308      114   I   3210       3007                                          # 781   :
  : MREV.M     PON1.M    I TSPB       AUT.M                                                :
  :  H040.2     H008.0    I  H000.7     H047.0                                              :
11 *---] [-------]/[-----*                                                                   *
  :   Y002      X040  I   X007       Y038                                                   :
  :   3309      314   I   108        2114                                                   :
  :                   I                                                                    :
  :  H079.6           I                                                                    :
11 *---] [-------------*                                                                     *
  :   M206                                                                                  :
  :   3211                                                                                  :
```

DRN. BY. K.MIURA	TITLE.	CONTROL.
DATE. 1.31.1986	V9C15/40	MAZATROL CAM M-2
CHK'D BY. T.HIRATA	YM2B453G	DRAWING NO.
DATE. 1.31.1986		4241681801G
APPR'D BY M.MURASE	SEQUENCE DIAGRAM	
DATE. 1.31.1986		SHEET. 32 OF. 103

REV.	DATE.	NAME.

YAMAZAKI MAZAK CORPORATION

```
  : STLX        TSME        PTX         AUT.M       +-------+                                          MSTP      : MAGAZINE STOP
  :  H078.7     H064.1      H078.6      H047.0      I  =    I                                           H07C.3    :  3301 *3302 *3303
1 *--] [--+--] [--------] [--------] [--------I   D 14I--------------------------------------------( )--*
  :  M199    I  M 33       M198        Y038        I   D 10I                                            M227      :
  :  3007    I  3303       3012        2114        +-------+                                            # 790     :
  : 30TS     I
  :  H092.3  I
1 *--]/[--*
  :  M403
  :  3007
  : FWDME       AUT.M                   MSTP        TFP                                                  GSL.M     : GEAR SHIFT LOW
  :  H07C.4     H047.0      H079.6      H07C.3      H060.3                                              H041.4    :  3302
2 *--] [--+--] [--------*--]/[--------]/[--------]/[--------------------------------------------( )--*
  :  M228    I  Y038    I  M206        M227        M  3                                                Y00C      :
  :  3202    I  2114    I  3211        3301        2502                                                # 800     :
  : REVME    I          I
  :  H07C.5  I          I
2 *--] [--*            *
  :  M229               I
  :  3203               I
  : TSME                I
  :  H064.1     H079.6  I
2 *--] [--------]/[--*
  :  M 33       M206
  :  3303       3211
  : AUT.M       MSTP        TSME        *RST                                                             TSME      : TOOL SELECT MEMORY
  :  H047.0     H07C.3      H064.1      H060.0                                                          H064.1    :  3102 3103 3104 3202
3 *--] [--+--]/[--+--] [--+--] [--------------------------------------------( )--*
  :  Y038    I  M227    I  M 33    I   M  0                                                            M 33      :  3203 3210 3301 3302
  :  2114    I  3301    I  3303    I   2113                                                            # 816     :  3303 *3304 *3306
  : TCME     I          I          I
  :  H074.0  I          *          *
3 *--] [--*            I          I
  :  M160               I          I
  :  6505               I          I
  : PTX         30TS    I          I
  :  H078.6     H092.3  I          I
3 *--]/[--------]/[--*  *          I
  :  M198       M403    I          I
  :  3012       3007    I          I
  : STLX        30TS    I          I
  :  H078.7     H092.3  I          I
3 *--]/[--------] [--*  *          I
  :  M199       M403               I
  :  3007       3007               I
  : TFP                            I
  :  H060.3                        I
3 *--] [--------------------------*
  :  M  3                          I
  :  2502                          I
  : MNTS        TCME               I
  :  H065.3     H074.0             I
3 *--] [--------]/[--------------*
  :  M 43       M160
  :  3001       6505
  : PTX         TSME        TFP                                                                          TSOFFME   : TOOL SELECT OFF MEMORY
  :  H078.6     H064.1      H060.3                                                                      H067.4    :  3304 3305 3306
4 *--] [--+--]/[--------]/[--------------------------------------------( )--*
  :  M198    I  M 33       M  3                                                                        M 60      :
  :  3012    I  3303       2502                                                                        # 821     :
  : TSOFFME  I
  :  H067.4  I
4 *--] [--*
  :  M 60
  :  3304
  : TSOFFME                                                                                            +-------+ : TOOL SELECT OFF TIMER
  :  H067.4                                                                                            I  T 29 I :  3305 7106 7111 7207
5 *--] [--------------------------------------------------------------------------------------------I K    II-*  7303
  :  M 60                                                                                              I H0A3.5I :
  :  3304                                                                                              +-------+ :
  : TSOFFME     PTX         *RST                                                                         TSOFFAL   : TOOL SELECT OFF ALARM
  :  H067.4     H078.6      H060.0                                                                      H067.5    :  3306 5107 *7106 *7111
6 *--] [--------]/[--+--] [--------------------------------------------( )--*  *7207 *7303
  :  M 60       M198    I   M  0                                                                        M 61      :
  :  3304       3012    I   2113                                                                        # 831     :
  : TSOFFAL     TSME    I
  :  H067.5     H064.1  I
6 *--] [--------]/[--*
  :  M 61       M 33
  :  3306       3303
  : AL2         TSME        TFP                                                                          MROT      : MAGAZINE ROTATE
  :  H0C0.2     H064.1      H060.3                                                                      H064.2    :  3307 3308 3309
7 *--]/[--+--] [--------]/[--------------------------------------------( )--*
  :  F  2    I  M 33       M  3                                                                        M 34      :
  :  5107    I  3303       2502                                                                        # 836     :
  : AUT.M    I
  :  H047.0  I
7 *--]/[--*
  :  Y038
  :  2114
  : MROT        FWDME       MOP13       M02ME                                                            MFWD.M    : MAGAZINE FORWARD
  :  H064.2     H07C.4      H0CB.4      H06F.0                                                          H040.3    :  3012 3211 3308 *5106
8 *--] [--------] [--------]/[--------]/[--------------------------------------------( )--*
  :  M 34       M228        F 92        M120                                                            Y003      :
  :  3307       3202        6106        3703                                                            # 841     :
  : MROT        REVME       MOP13       M02ME                                                            MREV.M    : MAGAZINE REVERSE
  :  H064.2     H07C.5      H0CB.4      H06F.0                                                          H040.2    :  3012 3211 3309 *4401
9 *--] [--------] [--------]/[--------]/[--------------------------------------------( )--*  *5106
  :  M 34       M229        F 92        M120                                                            Y002      :
  :  3307       3203        6106        3703                                                            # 846     :
```

DRN. BY. K.MIURA	TITLE.	CONTROL.
DATE. 1.31.1986	VQC15/40	MAZATROL CAM M-2
CHK'D BY. T.HIRATA	YM2B453G	DRAWING NO.
DATE. 1.31.1986		4241681801G
APPR'D BY. M.MURASE	SEQUENCE DIAGRAM	
DATE. 1.31.1986		SHEET. 33 OF. 103

REV.	DATE.	NAME.

YAMAZAKI MAZAK CORPORATION

```
  : TFP                                                                                  +-------+ :
  :   H060.3                                                                           I BIN   I :
1 +---] [-------------------------------------------------------------------------------I   D 3I-+
  :   M 3                                                                              I   D 17I :
  :   2502                                                                             +-------+ :
  : TFP          30TS          +-------+                                               GRT16     : COMMAND GREATER THAN 16
  :   H060.3     H092.3      I LDI   I                                                  H079.7    :   3402  6106
2 +---] [-----+---]/[-------I R M250I-+-----------------------------------------------( )-----+
  :   M 3     I  M403       I UTY020I I                                                 M207      :
  :   2502    I  3007       +-------+ I                                                 # 862     :
  :           I 30TS        +-------+ I                                                           :
  :           I  H092.3     I LDI   I I                                                           :
2 +           +---] [-------I R M250I-+                                                           :
  :              M403       I UTY020I                                                             :
  :              3007       +-------+                                                             :
  : MEMD-1       MEMD-3                                                                  TUCME     : TOOL UNCLAMP MEMORY
  :   H082.0     H082.4                                                                    H068.4  :   3403  3404  3412 *3503
3 +---] [-------]/[-----+-----------------------------------------------------------------( )-----+
  :   M272       M276    I                                                                 M 68    :
  :   7105       7109    I                                                                 # 871   :
  : MEME-1       MEME-2  I                                                                         :
  :   H083.1     H083.3  I                                                                         :
3 +---] [-------]/[-----+                                                                          :
  :   M281       M283    I                                                                         :
  :   7206       7208    I                                                                         :
  : MEMF-1       MEMF-2  I                                                                         :
  :   H084.1     H084.3  I                                                                         :
3 +---] [-------]/[-----+                                                                          :
  :   M289       M291                                                                              :
  :   7302       7304                                                                              :
  : TUCME        TUCPRS      TUC.M                                                       TUCCON    : TOOL UNCLAMP CONFIRMATION
  :   H068.4     H003.1      H044.5                                                        H068.5  :   3404  7108  7209  7305
4 +---] [-------] [-------] [-----------------------------------------------------------( )-----+
  :   M 68       X019        Y025                                                          M 69    :
  :   3403       206         3412                                                          # 875   :
  : F1.B                                                                                   +-------+ :
  :   H165.2                                                                           I PLS   I :   3405  3406 *3406
5 +---] [-------------------------------------------------------------------------------I M365  I-+
  :   X0EA                                                                             I H08D.5I :
  :   920                                                                              +-------+ :
  : F1BPLS       F1.L        TUCPRS                                                      F1.L      : FUNCTION KEY 1 LAMP
  :   H08D.5     H11B.2      H003.1                                                        H11B.2  :  *3406  3406  3411 *5907
6 +---] [-------]/[-----+---]/[-----------------------------------------------------------( )-----+
  :   M365       Y1DA    I   X019                                                          Y1DA    :
  :   3405       3406    I   206                                                           # 884   :
  : F1BPLS       F1.L    I                                                                         :
  :   H08D.5     H11B.2  I                                                                         :
6 +---]/[-------] [-----+                                                                          :
  :   M365       Y1DA                                                                              :
  :   3405       3406                                                                              :
  : TUCSS        AUT.M       SMR.M                                                       +-------+ : TOOL UNCLAMP SSW.TIMER
  :   H003.2     H047.0      H041.2                                                    I  T 28 I :   3407  3408
7 +---] [-------]/[-------]/[-----------------------------------------------------------I K    5I-+
  :   X01A       Y038        Y00A                                                      I H0A3.4I :
  :   207        2114        2705                                                      +-------+ :
  : TUCSST                                                                             +-------+ : TOOL UNCLAMP PULSE
  :   H0B3.4                                                                           I PLS   I :   3408  3411
8 +---] [-------------------------------------------------------------------------------I M 66  I-+
  :   T 28                                                                             I H068.2I :
  :   3407                                                                             +-------+ :
  : TUCSS        TUC.M       TCME                                                      +-------+ : TOOL CLAMP PULSE
  :   H003.2     H044.5      H074.0                                                    I PLS   I :   3409  3410
9 +---]/[-------] [-------]/[-----------------------------------------------------------I M 67  I-+
  :   X01A       Y025        M160                                                      I H068.3I :
  :   207        3412        6505                                                      +-------+ :
  : TCLPLS       AUT.M                                                                   MTCLC     : MNL TOOL CLAMP COMMAND
  :   H068.3     H047.0                                                                    H088.5  :   3410 *3411
10 +---] [-------]/[-----------------------------------------------------------------( )-----+
  :   M 67       Y038                                                                      M325    :
  :   3409       2114                                                                      # 898   :
  : F1.L         MOP1        TUCPLS      MTCLC       SMR                                 MTUCLM    : MNL TOOL UNCLAMP MEMORY
  :   H11B.2     H0CA.0      H068.2      H088.5      H069.6                                H088.6  :   3411  3412
11 +---] [-----+---]/[-------] [-----+---]/[-------]/[-----------------------------------( )-----+
  :   Y1DA    I  F 80        M 66    I   M325        M 78                                  M326    :
  :   3406    I  5907        3408    I   3410        2701                                  # 906   :
  : SOSA      I                      I                                                             :
  :   H06B.4  I                      I                                                             :
11 +---] [-----+                     +                                                             :
  :   M 92                           I                                                             :
  :   5408                           I                                                             :
  : MTUCLM                           I                                                             :
  :   H088.6                         I                                                             :
11 +---] [-----------------------------+                                                           :
  :   M326                                                                                         :
  :   3411                                                                                         :
  : MTUCLM       SMR                                                                     TUC.M     : TOOL UNCLAMP
  :   H088.6     H069.6                                                                    H044.5  :  *2604 *2701  3404  3409
12 +---] [-----+---]/[-----------------------------------------------------------------( )-----+  3412  3501  3502 *3503
  :   M326    I  M 78                                                                      Y025    :  3704  5108 *5108
  :   3411    I  2701                                                                      # 910   :
  : TUCME     I                                                                                     :
  :   H068.4  I                                                                                     :
12 +---] [-----+                                                                                    :
  :   M 68                                                                                         :
  :   3403                                                                                         :
```

REV.	DATE.	NAME.	

DRN. BY. K.MIURA	TITLE.	CONTROL.
DATE. 1.31.1986	V9C15/40	MAZATROL CAM M-2
CHK'D BY. T.HIRATA	YM2B453G	DRAWING NO.
DATE. 1.31.1986		42416818016
APPR'D BY. M.MURASE	SEQUENCE DIAGRAM	
DATE. 1.31.1986		SHEET. 34 OF. 103

YAMAZAKI MAZAK CORPORATION

```
  : B38.M      TCPRS                                                                    B38.M     : B BCD 38
  :  H048.3    H003.0                                                                   H048.3    :   3501
1 *---] [-------]/[---*------------------------------------------------------------------( )---*
  :   Y043      X018   I                                                                 Y043    :
  :   3501       205   I                                                                 # 914   :
  : TUC.M              I                                                                         :
  :  H044.5            I                                                                         :
1 *---] [-------------*                                                                          *
  :   Y025                                                                                       :
  :   3412                                                                                       :
  : TUCPRS     TUC.M                                                                    TUC.L     : TOOL UNCLAMP LAMP
  :  H003.1    H044.5                                                                   H11A.5    :   3502
2 *---] [-------] [------------------------------------------------------------------------( )---*
  :   X019      -Y025                                                                    Y1D5    :
  :    206      3412                                                                     # 917   :
  : TCPRS      TUCME      TUC.M                                                         TCCON     : TOOL CLAMP CONFIRMATION
  :  H003.0    H068.4     H044.5                                                        H068.0    :   3503  7202  7211  7307
3 *---] [-------]/[-------]/[-----------------------------------------------------------( )---*
  :   X018      M 68       Y025                                                          M 64    :
  :    205      3403       3412                                                          # 921   :
  : MH0        MT4        MU3                                                           M43       : M43 CODE
  :  H060.5    H063.0     H061.5                                                        H089.7    :   3504  3604  *3605
4 *---] [-------] [-------] [-----------------------------------------------------------( )---*
  :   M 5      M 24       M 13                                                          M335    :
  :   2307     2406       2415                                                          # 925   :
  : MH0        MT4        MU4                                                           M44       : M44 CODE
  :  H060.5    H063.0     H061.6                                                        H089.1    :   3505  *3604  3605
5 *---] [-------] [-------] [-----------------------------------------------------------( )---*
  :   M 5      M 24       M 14                                                          M329    :
  :   2307     2406       2416                                                          # 929   :
  : MH0        MT4        MU5                                                           M45       : M45 CODE
  :  H060.5    H063.0     H061.7                                                        H089.2    :   3506  3603
6 *---] [-------] [-------] [-----------------------------------------------------------( )---*
  :   M 5      M 24       M 15                                                          M330    :
  :   2307     2406       2417                                                          # 933   :
  : MH0        MH0        MT4        MU6        *RST                                    MNN12     : MENUE NO.12
  :  H060.5    H060.5     H063.0     H062.0     H060.0                                  H086.6    :   3507  3601
7 *---]/[---*---] [-------] [-------] [---*---] [-----------------------------------------( )---*
  :   M 5   I   M 5        M 24       M 16  I    M 0                                     M310    :
  :   2307  I   2307       2406       2418  I    2113                                    # 943   :
  : MT4     I MNN12                         I                                                     :
  :  H063.0 I   H086.6                      I                                                     :
7 *---]/[---*---] [-----------------------*                                                      *
  :   M 24  I   M310                                                                             :
  :   2406  I   3507                                                                             :
  : MU7     I                                                                                    :
  :  H062.1 I                                                                                    :
7 *---]/[---*                                                                                    *
  :   M 17                                                                                       :
  :   2419                                                                                       :
  : ZP.B       ZP1.N      ZP41.N     *RST                                                  MZPRTUC   : NC TABLE UNCLAMP COMMAND
  :  H163.2    H140.4     H130.3     H060.0                                                H089.4    :   3508  3601
8 *---] [---*---] [-------]/[-------] [-----------------------------------------------------( )---*
  :   X0DA  I   X184       X103       M 0                                                   M332    :
  :    910  I    702        503       2113                                                  # 951   :
  : +4.B    I                                                                                      :
  :  H161.6 I                                                                                      :
8 *---] [---*                                                                                    *
  :   X0CE  I                                                                                      :
  :    818  I                                                                                      :
  : -4.B    I                                                                                      :
  :  H161.7 I                                                                                      :
8 *---] [---*                                                                                    *
  :   X0CF  I                                                                                      :
  :    819  I                                                                                      :
  : MZPRTUC I                                                                                      :
  :  H089.4 I                                                                                      :
8 *---] [---*                                                                                    *
  :   M332                                                                                         :
  :   3508                                                                                         :
  : RT.N       +4.B                                                                     MRTUCX    : NC TABLE UNCLAMP TIMER
  :  H140.2    H161.6                                                                   H089.6    :   3509  3601
9 *---] [---*---] [-------*-----------*-------------------------------------------------( )---*
  :   X182  I   X0CE  I       I                                                           M334    :
  :    620  I    818  I       I                                                           # 961   :
  : J.N     I -4.B    I       I                                                                   :
  :  H140.3 I  H161.7 I       I                                                                   :
9 *---] [---*---] [---*       *                                                                   *
  :   X183      X0CF          I                                                                   :
  :    701       819          I                                                                   :
  : HS1.N      H4.B           I                                                                   :
  :  H140.6    H166.4         I                                                                   :
9 *---] [---*---] [-----------*                                                                   *
  :   X186  I   X0F4                                                                             :
  :    704  I   1006                                                                             :
  : HS10.N  I                                                                                      :
  :  H140.7 I                                                                                      :
9 *---] [---*                                                                                    *
  :   X187                                                                                       :
  :    705                                                                                       :
```

		DRN. BY. K.MIURA	TITLE.
		DATE. 1.31.1986	V8C15/40
		CHK'D BY. T.HIRATA	YM2B453G
		DATE. 1.31.1986	
		APPR'D BY. M.MURASE	SEQUENCE DIAGRAM
		DATE. 1.31.1986	
REV.	DATE.	NAME.	

CONTROL. MAZATROL CAM M-2

DRAWING NO. 4241681801G

SHEET. 35 OF. 103

YAMAZAKI MAZAK CORPORATION

```
  : MC4.N                                                                                    RTUCCD    : TABLE UNCLAMP COMMAND
  :  H13B.4      H09F.6                                                                       H089.3   :  3601 *3602  3605 *4508
1 *---] [--------]/[--*-------------------------------------------------------------------------( )----*
  :   X15C        M510  I                                                                      M331    :
  :    610        3601  I                                                                    # 967    :
  : MZPRTUC              I                                                                            :
  :  H089.4              I                                                                            :
1 *---] [---*------------*                                                                            *
  :   M332  I                                                                                          :
  :   3508  I                                                                                          :
  : MRTUCX  I                                                                                          :
  :  H089.6 I                                                                                          :
1 *---] [---*                                                                                          *
  :   M334  I                                                                                          :
  :   3509  I                                                                                          :
  : MNN12   I                                                                                          :
  :  H086.6 I                                                                                          :
1 *---] [---*                                                                                          *
  :   M310                                                                                             :
  :   3507                                                                                             :
  : RTUCCD      SMZ4.N                                                                   +-------+ : INTERLOCK 4 DELAY TIMER
  :  H089.3      H142.3                                                                  I  T 40 I :  3602 *3605  4401
2 *---]/[--------] [-------------------------------------------------------------------------I K    3I-*
  :   M331        X193                                                                    I H0A5.0I :
  :   3601         717                                                                    +-------+ :
  : INHRLS      N/E S      M45T.M      *RST                                                M45T.M    : M45 OUTPUT
  :  H005.7      H094.6     H046.2      H060.0                                               H046.2   :  3603  3701
3 *---] [--------]/[---*---] [---*---] [-------------------------------------------------------( )----*
  :   X02F        M422  I    Y032  I    M  0                                                  Y032    :
  :    219        3603  I    3603  I    2113                                                 # 980    :
  : INHRLS      N/E S     I                                                                          :
  :  H005.7      H094.6 I                                                                            :
3 *---]/[--------] [---*                                                                              *
  :   X02F        M422                                                                                 :
  :    219        3603                                                                                 :
  : M45                                                                                               :
  :  H089.2                                                                                           :
3 *---] [-----------------------*                                                                     *
  :   M330                                                                                             :
  :   3506                                                                                             :
  : M44         N/E S      M43T.M      *RST                                                M43T.M    : M43 OUTPUT
  :  H089.1      H094.6     H046.0      H060.0                                               H046.0   :  3604  3701
4 *---]/[--------]/[---*---] [---*---] [-------------------------------------------------------( )----*
  :   M329        M422  I    Y030  I    M  0                                                  Y030    :
  :   3505        3603  I    3604  I    2113                                                 # 989    :
  : INHRLS      N/E S     I                                                                          :
  :  H005.7      H094.6 I                                                                            :
4 *---]/[--------] [---*                                                                              *
  :   X02F        M422                                                                                 :
  :    219        3603                                                                                 :
  : M43                                                                                               :
  :  H089.7                                                                                           :
4 *---] [-----------------------*                                                                     *
  :   M335                                                                                             :
  :   3504                                                                                             :
  : M43         N/E S      M44T.M      *RST       NCROTS                                   M44T.M    : M44 OUTPUT
  :  H089.7      H094.6     H046.1      H060.0      H094.4                                  H046.1   :  3605  3606 *3607  3701
5 *---]/[--------]/[---*---] [---*---] [---*---]/[--*----------------------------------------( )----*  5210 *5211  5301 *5302
  :   M335        M422  I    Y031  I    M  0  I     M420  I                                   Y031    :
  :   3504        3603  I    3605  I    2113  I     2908  I                                 #1005    :
  : INHRLS      N/E S     I                     I           I                                          :
  :  H005.7      H094.6 I                                                                            :
5 *---]/[--------] [---*                                                                              *
  :   X02F        M422                                                                                 :
  :    219        3603                                                                                 :
  : M44                                                                                               :
  :  H089.1                                                                                           :
5 *---] [-----------------------*                                                                     *
  :   M329                                                                                             :
  :   3505                                                                                             :
  : M44T.M      IT4DT      HYD.M       NCROTS                                                        :
  :  H046.1      H0B5.0     H044.4      H094.4                                                        :
5 *---] [---*---]/[--------] [--------] [-------------*                                               *
  :   Y031  I    T 40       Y024        M420                                                          :
  :   3605  I    3602       2302        2908                                                          :
  : RTUCCD  I                                                                                         :
  :  H089.3 I                                                                                         :
5 *---] [---*                                                                                         *
  :   M331                                                                                             :
  :   3601                                                                                             :
  : M44T.M      INHRLS                                                                   +-------+ : ROTARY TABLE UNCLAMP TIMER
  :  H046.1      H005.7                                                                  I  T 36 I :  3606 *4401
6 *---] [--------] [-------------------------------------------------------------------------I K    4I-*
  :   Y031        X02F                                                                    I H0A4.4I :
  :   3605         219                                                                    +-------+ :
  : M44T.M      INHRLS                                                                   +-------+ : ROTARY TABLE CLAMP TIMER
  :  H046.1      H005.7                                                                  I  T 37 I :  3607  4508
7 *---]/[--------]/[-------------------------------------------------------------------------I K    5I-*
  :   Y031        X02F                                                                    I H0A4.5I :
  :   3605         219                                                                    +-------+ :
```

REV.	DATE.	NAME.	

DRN. BY. K.MIURA	TITLE.	CONTROL.
DATE. 1.31.1986	VQC15/40	MAZATROL CAM M-2
CHK'D BY. T.HIRATA	YM2B453G	DRAWING NO.
DATE. 1.31.1986		4241681801G
APPR'D BY. M.MURASE	SEQUENCE DIAGRAM	
DATE. 1.31.1986		SHEET. 36 OF. 103

YAMAZAKI MAZAK CORPORATION

```
  : INHRLS      N/ES       NCROTS                                                                IND.M     : INDEX TABLE MEMORY
  :  H005.7     H094.6     H094.4                                                                H089.5    :  3701 #5005
1 #---]/[-------]/[---+---]/[-------------------------------------------------------------------( )-----#
  :   X02F        M422  I   M420                                                                 M333      :
  :    219        3603  I   2908                                                                 #1022     :
  : M44T.M      N/ES       I                                                                                :
  :  H046.1     H094.6     I                                                                                :
1 #---] [-------] [-------#                                                                                 #
  :   Y031  I     M422     I                                                                                :
  :    3605 I     3603     I                                                                                :
  : M43T.M  I              I                                                                                :
  :  H046.0 I              I                                                                                :
1 #---] [-------#          #                                                                                 #
  :   Y030                 I                                                                                :
  :    3604                I                                                                                :
  : M45T.M                 I                                                                                :
  :  H046.2                I                                                                                :
1 #---] [-----------------#                                                                                 #
  :   Y032                                                                                                  :
  :    3603                                                                                                 :
  : TSINTLS     AUT.M                                                                                TSINTL    : TOOL SELECT INTERLOCK
  :  H008.3     H047.0                                                                               H07F.6    :  3702 6104
2 #---]/[-------] [-----------#                                                                     ( )-----#
  :   X043        Y038         I                                                                     M254      :
  :    317        2114         I                                                                     #1030     :
  : TCME        #ALRST     TSINTL  I                                                                          :
  :  H074.0     H06F.7     H07F.6  I                                                                          :
2 #---] [-------] [-------] [-----#                                                                           #
  :   M160  I     M127       M254                                                                            :
  :    6505 I     5102       3702                                                                            :
  : TSME    I                                                                                                 :
  :  H064.1 I                                                                                                 :
2 #---] [-----#                                                                                               #
  :    M 33                                                                                                   :
  :    3303                                                                                                   :
  : TCME        M02ME      CSTBX      #RST                                                           M02ME     : M02 MEMORY
  :  H074.0     H06F.0     H076.3     H060.0                                                         H06F.0    :  #3308 #3309 3703
3 #---] [-------] [-------]/[-------] [-------------------------------------------------------------( )-----#
  :   M160  I     M120       M179  I    M  0                                                          M120      :
  :    6505 I     3703       2201  I    2113                                                          #1037     :
  : TSME    I                      I                                                                            :
  :  H064.1 I                      I                                                                            :
3 #---] [-----#                    #                                                                            #
  :    M 33                        I                                                                            :
  :    3303                        I                                                                            :
  : MOP12                          I                                                                            :
  :  H0CB.3                        I                                                                            :
3 #---] [-----------------------#                                                                             #
  :    F 91                                                                                                   :
  :    6104                                                                                                   :
  : TUC.M       TCME                                                                                 SAB.M     : SPINDLE AIR BLAST
  :  H044.5     H074.0                                                                               H043.0    :  3704 3903 3904
4 #---] [-------] [-------------------------------------------------------------------------------( )-----#
  :   Y025        M160                                                                                Y018      :
  :    3412       6505                                                                                #1040     :
  : MH0         MT0        MU9                                                                      M09ME     : COOLANT OFF MEMORY
  :  H060.5     H062.4     H062.3                                                                   H06C.1    :  3705 #3706 #3707 #3708
5 #---] [-------] [-------] [-------------------------------------------------------------------( )-----#  #3801 #3802 #3803 #3804
  :    M  5       M 20       M 19                                                                    M 97      :
  :    2307       2402       2501                                                                    #1044     :
  : MH0         MT0        MU7        M09ME      #RST                                              M07ME     : M07:MIST COOLANT MEMORY
  :  H060.5     H062.4     H062.1     H06C.1     H060.0                                            H06C.2    :  3706 3810
6 #---] [-------] [-------] [-------#---]/[-------] [-------------------------------------------( )-----#
  :    M  5       M 20       M 17  I    M 97       M  0                                            M 98      :
  :    2307       2402       2419  I    3705       2113                                            #1051     :
  : M07ME                          I                                                                          :
  :  H06C.2                        I                                                                          :
6 #---] [-----------------------#                                                                             #
  :    M 98                                                                                                   :
  :    3706                                                                                                   :
  : MH0         MT0        MU8        M09ME      #RST                                              M08ME     : M08:FLOOD COOLANT MEMORY
  :  H060.5     H062.4     H062.2     H06C.1     H060.0                                            H06C.3    :  3707 3806
7 #---] [-------] [-------] [-------#---]/[-------] [-------------------------------------------( )-----#
  :    M  5       M 20       M 18  I    M 97       M  0                                            M 99      :
  :    2307       2402       2420  I    3705       2113                                            #1058     :
  : M08ME                          I                                                                          :
  :  H06C.3                        I                                                                          :
7 #---] [-----------------------#                                                                             #
  :    M 99                                                                                                   :
  :    3707                                                                                                   :
  :              MU0        MT5        MH0        M09ME      #RST                                      M50ME     : M50:AIR BLAST MEMORY
  :  H09F.0     H061.2     H063.1     H060.5     H06C.1     H060.0                                    H06C.4    :  3708 3901
8 #---]/[-------] [-------] [-------#---] [-------#---]/[-------] [-------------------------------------( )-----#
  :   M504        M 10       M 25  I    M  5  I    M 97       M  0                                    M100      :
  :    3708       2412       2407  I    2307  I    3705       2113                                    #1070     :
  :              MU5        MT2        I          I                                                            :
  :  H09F.0     H061.7     H062.6     I          I                                                            :
8 #---] [-------] [-------] [-----#               #                                                            #
  :   M504        M 15       M 22                 I                                                            :
  :    3708       2417       2404                 I                                                            :
  : M50ME                                          I                                                            :
  :  H06C.4                                        I                                                            :
8 #---] [-----------------------------------------#                                                            #
  :   M100                                                                                                    :
  :    3708                                                                                                   :
```

DRN. BY. K.MIURA	TITLE.	CONTROL.
DATE. 1.31.1986	VOC15/40	MAZATROL CAM M-2
CHK'D BY. T.HIRATA	YM2B453G	DRAWING NO.
DATE. 1.31.1986		42416818016
APPR'D BY. M.MURASE	SEQUENCE DIAGRAM	
DATE. 1.31.1986		SHEET. 37 OF. 103

REV.	DATE.	NAME.

YAMAZAKI MAZAK CORPORATION

```
  : MH0        MT5        MU1        M09ME      *RST                                                  M51ME    : M51:FLOOD COOLANT 2 MEMORY
  : H060.5     H063.1     H061.3     H06C.1     H060.0                                                H06C.5   :   3801  3807
1 *---] [----------] [----------] [----+----]/[----------] [-----------------------------------------( )-----*
  :   M 5        M 25       M 11   I   M 97       M 0                                                   M101     :
  :   2307       2407       2413   I   3705       2113                                                  #1077    :
  : M51ME                          I                                                                   :        :
  : H06C.5                         I                                                                   :        :
1 *---] [-----------------------*                                                                      :        :
  :   M101                                                                                             :        :
  :   3801                                                                                             :        :
  : MH0        MT5        MU2        M09ME      *RST                                                  M52ME    : M52:TAP COOLANT MEMORY
  : H060.5     H063.1     H061.4     H06C.1     H060.0                                                H06C.7   :   3802  3809
2 *---] [----------] [----------] [----+----]/[----------] [-----------------------------------------( )-----*
  :   M 5        M 25       M 12   I   M 97       M 0                                                   M103     :
  :   2307       2407       2414   I   3705       2113                                                  #1084    :
  : M52ME                          I                                                                   :        :
  : H06C.7                         I                                                                   :        :
2 *---] [-----------------------*                                                                      :        :
  :   M103                                                                                             :        :
  :   3802                                                                                             :        :
  : MH0        MT5        MU3        M09ME      *RST                                                  M53ME    : M53:DUST INHALE MEMORY
  : H060.5     H063.1     H061.5     H06C.1     H060.0                                                H06C.6   :   3803  3902
3 *---] [----------] [----------] [----+----]/[----------] [-----------------------------------------( )-----*
  :   M 5        M 25       M 13   I   M 97       M 0                                                   M102     :
  :   2307       2407       2415   I   3705       2113                                                  #1091    :
  : M53ME                          I                                                                   :        :
  : H06C.6                         I                                                                   :        :
3 *---] [-----------------------*                                                                      :        :
  :   M102                                                                                             :        :
  :   3803                                                                                             :        :
  : MH0        MT5        MU4        M09ME      *RST                                                  ACTIVE+Y : +Y ACTIVE 2nd ZP(SQB:119)
  : H060.5     H063.1     H061.6     H06C.1     H060.0                                                H07C.7   :   3804  3807
4 *---] [----------] [----------] [----+----]/[----------] [-----------------------------------------( )-----*
  :   M 5        M 25       M 14   I   M 97       M 0                                                   M231     :
  :   2307       2407       2416   I   3705       2113                                                  #1098    :
  : ACTIVE+Y                       I                                                                   :        :
  : H07C.7                         I                                                                   :        :
4 *---] [-----------------------*                                                                      :        :
  :   M231                                                                                             :        :
  :   3804                                                                                             :        :
  : ECOLEN.M   PDCL                          HYD.M      MGCCRS     PRGSTP.L                            ENCOOL   : ENABLE COOLANT
  : H007.3     H091.5                        H044.4     H00A.3     H11D.3                              H06D.1   :   3805  3806  3807  3809
5 *---] [----+----] [----+----------+----] [----------] [----------]/[-----------------------------------( )-----*   3810  3901  3902
  :   X03B   I   M397   I          I    I   Y024       X053       Y1EB                                M105     :
  :   311    I   9206   I          I    I   2302       404        2205                                #1110    :
  : CDOORS   I 2PCS     I          I    I                                                                :        :
  : H093.2   I H093.0   I          I    I                                                                :        :
5 *---]/[----+----]/[----+          *    *                                                                :        :
  :   M410       M408                I                                                                   :        :
  :   3805       3805                I                                                                   :        :
  : ECOLEN.M   CDOORS                I                                                                   :        :
  : H007.3     H093.2                I                                                                   :        :
5 *---] [----------]/[----------*                                                                      :        :
  :   X03B       M410                                                                                   :        :
  :   311        3805                                                                                   :        :
  : M08ME      CAUT       ENCOOL     MARETL                                                            FCL.M    : FLOOD COOLANT VALVE
  : H06C.3     H08F.7     H06D.1     H08D.3                                                            H042.1   :   3806  3808
6 *---] [----------] [----+----] [----------] [-----------------------------------------( )-----*
  :   M 99       M383   I   M105       M363                                                  Y011     :
  :   3707       8610   I   3805       2911                                                  #1116    :
  : CMAN                I                                                                   :        :
  : H090.0              I                                                                   :        :
6 *---] [-----------*                                                                                  :        :
  :   M384                                                                                             :        :
  :   8611                                                                                             :        :
  : 2NDFCS     M51ME      ENCOOL     MARETL                                                            THC.M    : THROUGH HOLE COOLANT
  : H094.0     H06C.5     H06D.1     H08D.3                                                            H042.2   :   2902  3807  3808
7 *---] [----------] [----+----] [----------] [-----------------------------------------( )-----*
  :   M416       M101   I   M105       M363                                                  Y012     :
  :   3307       3801   I   3805       2911                                                  #1124    :
  : 2NDABS     ACTIVE+Y I                                                                            :        :
  : H094.2     H07C.7 I                                                                              :        :
7 *---] [----------] [----*                                                                            :        :
  :   M418       M231                                                                                   :        :
  :   2902       3804                                                                                   :        :
  : THC.M      2NDABS     MARETL                                                                    FCM.M    : FLOOD COOLANT MOTOR
  : H042.2     H094.2     H08D.3                                                                    H042.0   :   3808
8 *---] [----------]/[----+----] [-----------------------------------------( )-----*
  :   Y012       M418   I   M363                                                  Y010     :
  :   3807       2902   I   2911                                                  #1129    :
  : FCL.M               I                                                                   :        :
  : H042.1              I                                                                   :        :
8 *---] [-----------*                                                                                  :        :
  :   Y011                                                                                             :        :
  :   3806                                                                                             :        :
  : TAPCS      M52ME      ENCOOL     MARETL                                                            TAPC.M   : TAP COOLANT
  : H094.1     H06C.7     H06D.1     H08D.3                                                            H042.6   :   3809
9 *---] [----------] [----------] [----------] [-----------------------------------------( )-----*
  :   M417       M103       M105       M363                                                  Y016     :
  :   3809       3802       3805       2911                                                  #1134    :
  : M07ME      MAUT       ENCOOL     MARETL                                                            MCL.M    : MIST COOLANT
  : H06C.2     H090.2     H06D.1     H08D.3                                                            H042.3   :   3810
10 *---] [----------] [----+----] [----------] [-----------------------------------------( )-----*
  :   M 98       M386   I   M105       M363                                                  Y013     :
  :   3706       8613   I   3805       2911                                                  #1140    :
  : MMAN                I                                                                   :        :
  : H090.3              I                                                                   :        :
10 *---] [-----------*                                                                                 :        :
  :   M387                                                                                             :        :
  :   8701                                                                                             :        :
```

DRN. BY. K.MIURA	TITLE.	CONTROL.
DATE. 1.31.1986	VQC15/40	MAZATROL CAM M-2
CHK'D BY. T.HIRATA	YM2B453G	DRAWING NO.
DATE. 1.31.1986		42416818016
APPR'D BY. M.MURASE	SEQUENCE DIAGRAM	
DATE. 1.31.1986		SHEET. 38 OF. 103

REV.	DATE.	NAME.

YAMAZAKI MAZAK CORPORATION

```
  : M50ME      BAUT       ENCOOL                                                    WAB.M     : WORK AIR BLAST
  :  H06C.4    H090.5     H06D.1                                                    H042.4    :  3901
1 *---] [----------] [---*---] [-------------------------------------------------( )---*
  :   M100       M389   I   M105                                                     Y014      :
  :   3708       8703   I   3805                                                     #1145     :
  : BMAN                I                                                                      :
  :  H090.6             I                                                                      :
1 *---] [-------------*                                                                        *
  :   M390                                                                                     :
  :   8704                                                                                     :
  : 2NDABS     M53ME      ENCOOL                                                    WAB2.M    : WORK AIR BLAST 2
  :  H094.2    H06C.6     H06D.1                                                    H042.5    :  3902
2 *---] [----------] [----------] [-------------------------------------------------( )---*
  :   M418       M102       3805                                                     Y015      :
  :   2902       3803                                                                #1149     :
  : SAB.M                                                                           +-------+ :
  :  H043.0                                                                         I  T 35 I :  3903 *3904
3 *---] [-------------------------------------------------------------------------I K   20I-*
  :   Y018                                                                          I H0A4.3I :
  :   3704                                                                          +-------+ :
  : SAB.M                                                                           A-JET.M   : AIR JET
  :  H043.0    H0B4.3                                                               H046.5    :  3904
4 *---] [----------]/[-------------------------------------------------------------( )---*
  :   Y018       T 35                                                                 Y035      :
  :   3704       3903                                                                 #1155     :
  : MMS-PON    PW1.M      AHS                                                       MMSON.L   : MMS ON LAMP
  :  H00C.0    H044.0     H096.5                                                    H11F.0    :  3905
5 *---] [----------] [----------]/[-------------------------------------------------( )---*
  :   X060       Y020       M437                                                     Y1F8      :
  :    408       2101       3905                                                     #1159     :
  : TOUCH.N    MMS-ST     MMSS                                                      MMSRDY.L  : MMS READY LAMP
  :  H13B.1    H00C.3     H095.1                                                    H11F.1    :  3906
6 *---] [----------] [----------] [---*-----------------------------------------------( )---*
  :   X159       X063       M425   I                                                  Y1F9      :
  :    607        411       2203   I                                                  #1167     :
  : SEN-RDY    AHS        MMSS      I                                                           :
  :  H00C.2    H096.5     H095.1    I                                                           :
6 *---] [----------]/[----------]/[---*                                                           *
  :   X062       M437       M425                                                                 :
  :    410       3905       2203                                                                 :
  : ST.L       TF         TOUCH.N    MMS-ST     MMSS                                      MMSST.L   : MMS START LAMP
  :  H119.0    H079.4     H13B.1     H00C.3     H095.1                                    H11F.2    :  3907
7 *---] [---*---]/[----------] [----------] [----------] [---*-----------------------------( )---*
  :   Y1C8   I   M204       X159       X063       M425   I                                  Y1FA      :
  :   8802   I   2104        607        411       2203   I                                  #1178     :
  : SP.L     I                                           I                                            :
  :  H119.1  I                                           I                                            :
7 *---] [---*                                            *                                            *
  :   Y1C9                                               I                                            :
  :   8803                                               I                                            :
  : MMS-ST     AHS        MMSS                           I                                            :
  :  H00C.3    H096.5     H095.1                         I                                            :
7 *---] [----------]/[----------]/[-----------------------*                                            *
  :   X063       M437       M425                                                                     :
  :    411       3905       2203                                                                     :
  : SKIP1.M    TF         TOUCH.N                                                   MMSSKP.L  : MMS SKIP LAMP
  :  H007.7    H079.4     H13B.1                                                    H11F.3    :  3908
8 *---] [----------]/[----------] [-------------------------------------------------( )---*
  :   X03F       M204       X159                                                     Y1FB      :
  :    313       2104        607                                                     #1182     :
  : TF         TOUCH.N                                                              +-------+ :
  :  H079.4    H13B.1                                                               I  T 66 I :  3909 *3910  5701
9 *---]/[---*---] [-------------------------------------------------------------------I K   10I-*
  :   M204   I   X159                                                                I H0A8.2I :
  :   2104   I    607                                                                +-------+ :
  :          I                                                                                 :
  :  H0B8.2  I                                                                                 :
9 *---] [---*                                                                                  *
  :   T 66                                                                                     :
  :   3909                                                                                     :
  : CSTBX      MMS-ST     MMSS       TOUCH.N    TF                                        MMSCMD.M  : MMS COMMAND (MMS UNIT ON)
  :  H076.3    H00C.3     H095.1     H13B.1     H079.4                                    H046.6    :  3910  5606
10 *---] [----------]/[---*---] [---*---] [----------]/[-------------------------------( )---*
  :   M179       X063   I   M425   I   X159       M204                                     Y036      :
  :   2201        411   I   2203   I    607       2104                                     #1197     :
  :                     I          I                                                                :
  :  H0B8.2             I          I                                                                :
10 *---]/[-----------*            *                                                                  *
  :   T 66                        I                                                                :
  :   3909                        I                                                                :
  : AHS        MMSS               I                                                                :
  :  H096.5    H095.1             I                                                                :
10 *---]/[----------]/[-----------*                                                                  *
  :   M437       M425                                                                               :
  :   3905       2203                                                                               :
  : SEN-RDY    TOUCH.N    *RST                                                      MMSONX    : MMS SENS READY ON AUX
  :  H00C.2    H13B.1     H060.0                                                    H06D.0    :  3911  4001 *5603
11 *---] [---*---] [----------] [-------------------------------------------------( )---*
  :   X062   I   X159       M  0                                                     M104      :
  :    410   I    607       2113                                                     #1202     :
  : MMSONX   I                                                                                 :
  :  H06D.0  I                                                                                 :
11 *---] [---*                                                                                 *
  :   M104                                                                                     :
  :   3911                                                                                     :
```

				DRN. BY. K.MIURA	TITLE.	CONTROL.
				DATE. 1.31.1986	V9C15/40	MAZATROL CAM M-2
				CHK'D BY. T.HIRATA	YM2B453G	DRAWING NO.
				DATE. 1.31.1986		4241681801G
				APPR'D BY. M.MURASE	SEQUENCE DIAGRAM	
				DATE. 1.31.1986		SHEET. 39 OF. 109
REV.	DATE.	NAME.		YAMAZAKI MAZAK CORPORATION		

```
  : MMSONX      MMSS        MMS-PON     MMS-ST      TOUCH.N     *RST                                          MMSCD.N   : MMS COMMAND NC
  :  H06D.0     H095.1       H00C.0      H00C.3      H13B.1      H060.0                                         H10D.7   :   4001
1 *---] [-------]/[---*---] [-------] [---*---] [-------] [-------------------------------------------------( )---*
  :   M104       M425   I    X060        X063   I    X159        M  0                                          Y16F    :
  :   3911       2203   I     408         411   I     607       2113                                          #1215    :
  : TF          MMSS        I                   I
  :  H079.4     H095.1      I                   I
1 *---]/[-------] [---*                         *
  :   M204       M425                           I
  :   2104       2203                           I
  : MMSS        AHS                             I
  :  H095.1     H096.5                          I
1 *---]/[-------] [-----------------------------*
  :   M425       M437
  :   2203       3905
  : MHO         MT3         MU3         *RST                                                                     ENGS      : ENABLE GEAR SHIFT
  :  H060.5     H062.7      H061.5      H060.0                                                                    H06B.0   :   4002  4101  4204  6101
2 *---] [-------] [-------] [-------] [---*---] [-------------------------------------------------( )---*        6108
  :   M  5       M 23       M 13   I    M  0                                                                     M 88    :
  :   2307       2405       2415   I    2113                                                                    #1223    :
  : AEXT.N      ENGS                   I
  :  H10D.4     H06B.0                 I
2 *---]/[-------] [-----------------------*
  :   Y16C       M 88
  :   4105       4002
  : MHO         MT3         MU4         *RST                                                                     M34ME     : MEASURING ARM RET. (M34)
  :  H060.5     H062.7      H061.6      H060.0                                                                    H06A.7   :   4003  4004 *4102
3 *---] [-------] [-------] [-------] [---*---] [-------------------------------------------------( )---*
  :   M  5       M 23       M 14   I    M  0                                                                     M 87    :
  :   2307       2405       2416   I    2113                                                                    #1231    :
  : AEXT.N      M34ME                  I
  :  H10D.4     H06A.7                 I
3 *---] [-------] [-----------------------*
  :   Y16C       M 87
  :   4105       4003
  : AUT.N       AEXT.M      TBRME                                                                                +-------+ : MEASURING ARM RETRACT PULSE
  :  H140.0     H046.4      H070.7                                                                               I PLS   I :   4004  4103
4 *---] [-------] [-------]/[---*-----------------------------------------------------------------------------I M134  I-*
  :   X180       Y034       M135   I                                                                            I H070.6I :
  :    618       4104       4204   I                                                                            +-------+ :
  : M61M        PLDMOP      2PCS   I
  :  H07A.0     H08E.5      H093.0 I
4 *---] [-------]/[---*---] [---*
  :   M208       M373   I   M408   I
  :   9305       9502   I   3805   I
  : M62M        PULMOP      I      I
  :  H07A.1     H08F.1      I      I
4 *---] [-------]/[---*      *
  :   M209       M377   I   I
  :   9401       9506   I   I
  : M69M        PUCMOP      I      I
  :  H07A.5     H09C.0      I      I
4 *---] [-------]/[---*      *
  :   M213       M480       I
  :   9405       9804       I
  : M34ME                   I
  :  H06A.7                 I
4 *---] [-----------------------*
  :   M 87
  :   4003
  : AUT.M       STL.N       ARMOPLS                                                                              AEXTCD    : MEASURING ARM EXTEND COMMAND
  :  H047.0     H132.1      H08D.2                                                                                H073.2   :   4005  4007  4101  6101
5 *---] [-------]/[-------] [-------------------------------------------------------------------------------( )---*        6108
  :   Y038       X111       M362                                                                                    M154    :
  :   2114        507       8609                                                                                   #1250    :
  : AUT.M       STL.N       ARMIPLS                                                                              ARETCD    : MEASURING ARM RETRACT COMMAND
  :  H047.0     H132.1      H08C.4                                                                                H073.3   :   4006  4008 *4102  4103
6 *---] [-------]/[-------] [-------------------------------------------------------------------------------( )---*
  :   Y038       X111       M356                                                                                    M155    :
  :   2114        507       8608                                                                                   #1254    :
  : AEXTCD      2PCS        ZPI.N       AEXTRS      ARET-ME     *RST                                              AOUT.L    : MEASURING ARM OUT(EXT.) LAMP
  :  H073.2     H093.0      H130.2      H004.6      H070.1      H060.0                                            H073.5   :   4007  8401
7 *---] [---*---]/[---*---] [-------]/[-------]/[-------] [-------------------------------------------------( )---*
  :   M154   I   M408   I   X102        X026        M129        M  0                                          M157    :
  :   4005   I   3805   I    502         213        4103        2113                                          #1264    :
  : AOUT.L      I PCLL      I
  :  H073.5     I H09B.2    I
7 *---] [---*---] [---*
  :   M157       M474
  :   4007       9207
  : ARETCD      ZPI.N       MARETL      *RST                                                                     AIN.L     : MEASURING ARM IN(RET.) LAMP
  :  H073.3     H130.2      H08D.3      H060.0                                                                    H073.6   :   4008  8314
8 *---] [---*---] [-------]/[-------] [-------------------------------------------------------------------------( )---*
  :   M155   I   X102        M363        M  0                                                                    M158    :
  :   4006   I    502       2911        2113                                                                    #1270    :
  : AIN.L       I
  :  H073.6     I
8 *---] [---*
  :   M158
  :   4008
```

DRN. BY. K.MIURA	TITLE.	CONTROL.
DATE. 1.31.1986	V9C15/40	MAZATROL CAM M-2
CHK'D BY. T.HIRATA	YM2B453G	DRAWING NO.
DATE. 1.31.1986		4241681801G
APPR'D BY. M.MURASE	SEQUENCE DIAGRAM	
DATE. 1.31.1986		SHEET. 40 OF. 103

REV.	DATE.	NAME.

YAMAZAKI MAZAK CORPORATION

```
  : TMEC        AFINPLS     2PCS        ZPZ1.N      TBRS        AEXTRS      ARET-ME     *RST                                  AEXT-ME     : MEASURING ARM EXTEND MEMORY
  :   H073.1      H073.0      H093.0      H130.2      H095.2      H004.6      H070.1      H060.0                                H070.0      :   4101  4104 *5006
1 +---] [---------] [---+---]/[---+---] [---+---]/[---+---]/[---------]/[---------] [-----------------------------------------( )---+
  :   M153        M152  I   M408  I     X102  I     M426  I     X026        M129        M  0                                  M128        :
  :   4102        2808  I   3805  I     502   I     4101  I     213         4103        2113                                  #1287       :
  : AEXTCD                I PCLL        I         I ZPX1.N    I                                                                           :
  :   H073.2              I   H09B.2    I         I   H130.0    I                                                                           :
1 +---] [---+-----------+---] [---+         +---] [---+                                                                                   +
  :   M154  I               M474                  I   X100                                                                                :
  :   4005  I               9207                  I   420                                                                                 :
  : AEXT.N  I                                     I                                                                                       :
  :   H13B.5 I                                    I                                                                                       :
1 +---] [---+                                     +                                                                                       +
  :   X15D  I                                     I                                                                                       :
  :   611   I                                     I                                                                                       :
  : ENGS    I                                     I                                                                                       :
  :   H06B.0 I                                    I                                                                                       :
1 +---] [---+                                     +                                                                                       +
  :   M 88  I                                     I                                                                                       :
  :   4002  I                                     I                                                                                       :
  : AEXT-ME I                                     I                                                                                       :
  :   H070.0 I                                    I                                                                                       :
1 +---] [-----------------------------------------+                                                                                       +
  :   M128                                                                                                                                :
  :   4101                                                                                                                                :
  : AEXT.M      ARETCD      MDI.L       M34ME                                                                             TMEC        : TOOL MEASURING CYCLE
  :   H046.4      H073.3      H118.1      H06A.7                                                                            H073.1      :   4101  4102  4304
2 +---] [---+---]/[---------] [---------]/[-----------------------------------------------------------------------------( )---+
  :   Y034  I   M155        Y1C1        M 87                                                                              M153        :
  :   4104  I   4006        8707        4003                                                                              #1293       :
  : TMEC    I                                                                                                                           :
  :   H073.1 I                                                                                                                          :
2 +---] [---+                                                                                                                           +
  :   M153                                                                                                                              :
  :   4102                                                                                                                              :
  : TCME        AEXT.N      EQTST       ZPZ1.N      MARETL      *RST                                                      ARET-ME     : MEASURING ARM RETRACT MEMORY
  :   H074.0      H10D.4      H07C.6      H130.2      H08D.3      H060.0                                                    H070.1      :   *4007 *4101  4103 *4104
3 +---] [---------] [---------]/[---------] [---+---]/[---------] [-----------------------------------------------------------( )---+   *4204 *5006
  :   M160        Y16C        M230        X102  I     M363        M  0                                                      M129        :
  :   6505        4105        6606        502   I     2911        2113                                                      #1304       :
  : ARETCD                                          I                                                                                   :
  :   H073.3                                        I                                                                                   :
3 +---] [-----------------------------------------+                                                                                       +
  :   M155  I                                                                                                                             :
  :   4006  I                                                                                                                             :
  : ARET.N  I                                                                                                                             :
  :   H13B.6 I                                                                                                                            :
3 +---] [---+                                                                                                                           +
  :   X15E  I                                                                                                                             :
  :   612   I                                                                                                                             :
  : ARETPLS I                                                                                                                             :
  :   H070.6 I                                                                                                                            :
3 +---] [---+                                                                                                                           +
  :   M134  I                                                                                                                             :
  :   4004  I                                                                                                                             :
  : ARET-ME I                                                                                                                             :
  :   H070.1 I                                                                                                                            :
3 +---] [---+                                                                                                                           +
  :   M129                                                                                                                              :
  :   4103                                                                                                                              :
  : AEXTRS      HYD.M       ARET-ME                                                                                           AEXT.M      : MEASURING ARM EXTEND
  :   H004.6      H044.4      H070.1                                                                                            H046.4      :   4004  4102  4104  4105
4 +---] [---------]/[---+---]/[-----------------------------------------------------------------------------------------( )---+   5202 *5202 *5204  5205
  :   X026        Y024  I   M129                                                                                              Y034        :   5206 *5207
  :   213         2302  I   4103                                                                                              #1312       :
  : AEXT.M      *ESP.M    I                                                                                                               :
  :   H046.4      H000.0 I                                                                                                                :
4 +---] [---------] [---+                                                                                                                 +
  :   Y034        X000  I                                                                                                                 :
  :   4104        101   I                                                                                                                 :
  : AEXT-ME             I                                                                                                                 :
  :   H070.0            I                                                                                                                 :
4 +---] [-------------+                                                                                                                   +
  :   M128                                                                                                                              :
  :   4101                                                                                                                              :
  : AEXT.M      AEXTRS      AL61                                                                                              AEXT.N      : MEASURING ARM EXTEND NC
  :   H046.4      H004.6      H0C7.5                                                                                            H10D.4      :   *4002  4003  4103  4105
5 +---] [---------] [---------]/[-----------------------------------------------------------------------------------------( )---+   4302 *4304
  :   Y034        X026        F 61                                                                                            Y16C        :
  :   4104        213         5204                                                                                            #1316       :
  : TBKG.N                                                                                                                    TBRFIN.N    : TOOL BREAKAGE FIN
  :   H141.5                                                                                                                  H10D.6      :   4106
6 +---] [-----------------------------------------------------------------------------------------------------------------( )---+
  :   X18D                                                                                                                    Y16E        :
  :   711                                                                                                                     #1318       :
  : TCME        ALTBK.N                                                                                                       ALTBKG      : ALARM TOOL BREAKAGE
  :   H074.0      H141.4                                                                                                      H07E.0      :   2301  4107  5904
7 +---] [---------] [---+-----------------------------------------------------------------------------------------------------( )---+
  :   M160        X18C  I                                                                                                     M240        :
  :   6505        710   I                                                                                                     #1324       :
  : *ALRST      ALTBKG    I                                                                                                               :
  :   H06F.7      H07E.0 I                                                                                                                :
7 +---] [---------] [---+                                                                                                                 +
  :   M127        M240                                                                                                                    :
  :   5102        4107                                                                                                                    :
  : TFT1                                                                                                                      +-------+   : AE ALARM 2
  :   H0B3.0                                                                                                                  I PLS   I   :   4108 *4201
8 +---] [-----------------------------------------------------------------------------------------------------------------I M253  I-+
  :   T 24                                                                                                                    I H07F.5I   :
  :   6706                                                                                                                    +-------+   :
```

				DRN. BY. K.MIURA	TITLE.	CONTROL.
				DATE. 1.31.1986	V9C15/40	MAZATROL CAM M-2
				CHK'D BY. T.HIRATA	YM2B453G	DRAWING NO.
				DATE. 1.31.1986		42416818016
				APPR'D BY. M.MURASE	SEQUENCE DIAGRAM	
				DATE. 1.31.1986		SHEET. 41 OF. 103
REV.	DATE.	NAME.		YAMAZAKI MAZAK CORPORATION		

```
  : *ALRST      ALTBR       AEAL 2                                                          ALTBR     : ALARM TOOL BLEAK
  :  H06F.7     H07E.1      H07F.5                                                          H07E.1    :  4201  5904
1 +---] [-------] [---+---]/[-+-------------------------------------------------------------( )-----+
  :   M127       M241   I    M253   I                                                        M241      :
  :   5102       4201   I    4108   I                                                        #1333     :
  : TBKG.N              I TO        I                                                                  :
  :  H141.5             I  H074.5  I                                                                   :
1 +---] [---------------+---] [---+                                                                   +
  :   X18D                    M165                                                                    :
  :    711                    6605                                                                    :
  : AL77        MH0         MT5         MU8                                                     TLIFSBK   : TOOL LIFE SINGLE BLOCK
  :  H0C9.5     H060.5      H063.1      H062.2                                                  H07E.2    :  2301  4202 *8109
2 +---] [-------] [-------] [-------] [-+-------------------------------------------------------( )-----+
  :   F 77       M  5        M 25        M 18   I                                                M242      :
  :   5903       2307        2407        2420   I                                                #1341     :
  : *ALRST      TLIFSBK                         I                                                         :
  :  H06F.7     H07E.2                          I                                                         :
2 +---] [-------] [-----------------------------+                                                         +
  :   M127       M242                                                                                    :
  :   5102       4202                                                                                    :
  : MH0         MT3         MU5         AUT.N       *RST        TBRFIN.N                            TBRCD.N   : TOOL BREAKAGE COMMAND NC
  :  H060.5     H062.7      H061.7      H140.0      H060.0      H141.6                              H10D.5    :  4203  4204
3 +---] [-------] [-------] [-------] [-+---] [-------]/[-------------------------------------------( )-----+
  :   M  5       M 23        M 15        X180   I    M  0        X18E                                Y16D      :
  :   2307       2405        2417         618   I    2113        712                                 #1349     :
  : TBRCD.N                                      I                                                         :
  :  H10D.5                                      I                                                         :
3 +---] [-----------------------------------------+                                                         +
  :   Y16D                                                                                               :
  :   4203                                                                                               :
  : TBRME       ARET-ME     *RST                                                                TBRME     : TBR MEMORY
  :  H070.7     H070.1      H060.0                                                              H070.7    :  *4004  4204
4 +---] [-------]/[---+---] [-------------------------------------------------------------------( )-----+
  :   M135       M129   I    M  0                                                                M135      :
  :   4204       4103   I    2113                                                               #1355     :
  : TBRCD.N             I                                                                                :
  :  H10D.5             I                                                                                :
4 +---] [---+-----------+                                                                                +
  :   Y16D   I                                                                                           :
  :   4203   I                                                                                           :
  : ENGS     I                                                                                           :
  :  H06B.0  I                                                                                           :
4 +---] [---+                                                                                            +
  :   M 88                                                                                               :
  :   4002                                                                                               :
  : MH0         MT9         MU1         MIRR.N      *RST                                            MIRRORX   : X AXIS MIRROR IMAGE ON
  :  H060.5     H063.5      H061.3      H141.7      H060.0                                          H108.4    :  4205
5 +---] [-------] [-------] [-------] [-+---] [-------------------------------------------------------( )-----+
  :   M  5       M 29        M 11        X18F   I    M  0                                          Y144      :
  :   2307       2411        2413         713   I    2113                                          #1367     :
  : MIRR.N      MIRRORX                         I                                                         :
  :  H141.7     H108.4                          I                                                         :
5 +---]/[-------] [-----------------------------+                                                         +
  :   X18F   I   Y144                                                                                    :
  :    713   I   4205                                                                                    :
  : MH0      I                                                                                           :
  :  H060.5  I                                                                                           :
5 +---]/[---+                                                                                            +
  :   M  5   I                                                                                           :
  :   2307   I                                                                                           :
  : MT9      I                                                                                           :
  :  H063.5  I                                                                                           :
5 +---]/[---+                                                                                            +
  :   M 29   I                                                                                           :
  :   2411   I                                                                                           :
  : MU0      I                                                                                           :
  :  H061.2  I                                                                                           :
5 +---]/[---+                                                                                            +
  :   M 10                                                                                               :
  :   2412                                                                                               :
  : MH0         MT9         MU2         MIRR.N      *RST                                            MIRRORY   : Y AXIS MIRROR IMAGE ON
  :  H060.5     H063.5      H061.4      H141.7      H060.0                                          H108.5    :  4206
6 +---] [-------] [-------] [-------] [-+---] [-------------------------------------------------------( )-----+
  :   M  5       M 29        M 12        X18F   I    M  0                                          Y145      :
  :   2307       2411        2414         713   I    2113                                          #1379     :
  : MIRR.N      MIRRORY                         I                                                         :
  :  H141.7     H108.5                          I                                                         :
6 +---]/[-------] [-----------------------------+                                                         +
  :   X18F   I   Y145                                                                                    :
  :    713   I   4206                                                                                    :
  : MH0      I                                                                                           :
  :  H060.5  I                                                                                           :
6 +---]/[---+                                                                                            +
  :   M  5   I                                                                                           :
  :   2307   I                                                                                           :
  : MT9      I                                                                                           :
  :  H063.5  I                                                                                           :
6 +---]/[---+                                                                                            +
  :   M 29   I                                                                                           :
  :   2411   I                                                                                           :
  : MU0      I                                                                                           :
  :  H061.2  I                                                                                           :
6 +---]/[---+                                                                                            +
  :   M 10                                                                                               :
  :   2412                                                                                               :
```

				DRN. BY. K.MIURA	TITLE.	CONTROL.
				DATE. 1.31.1986	V9C15/40	MAZATROL CAM M-2
				CHK'D BY. T.HIRATA	YM2B453G	DRAWING NO.
				DATE. 1.31.1986		4241681801G
				APPR'D BY. M.MURASE	SEQUENCE DIAGRAM	
				DATE. 1.31.1986		SHEET. 42 OF. 103
REV.	DATE.	NAME.		YAMAZAKI MAZAK CORPORATION		

```
  : ST.L        AL0                                                                    MOP10     :
  :  H119.0     H0C0.0                                                                 H072.4    :  4301  4302  4303  4304
1 +---]/[-----+---] [-------------------------------------------------------------------( )-----+  4401
  :   Y1C8   I   F  0                                                                  M148      :
  :   8802   I   5103                                                                  #1383     :
  : MOP10    I                                                                                   :
  :  H072.4  I                                                                                   :
1 +---] [-----+                                                                                  +
  :   M148                                                                                       :
  :   4301                                                                                       :
  : SSET.M      AL57                                                                   ITX.N     : X AXIS INTERLOCK N/C
  :  H044.2     H0C7.1                                                                 H100.0    :  4302
2 +---]/[-------] [-----+-----------+-------------------------------------------------( )-----+
  :   Y022       F 57   I           I                                                   Y100      :
  :   2304       5601   I           I                                                   #1398     :
  : INTX.M      ADDIS   I           I                                                             :
  :  H006.0     H095.4  I           I                                                             :
2 +---]/[-------] [-----+           +                                                             +
  :   X030       M428   I           I                                                             :
  :    220       2201   I           I                                                             :
  : RCTIT              I           I                                                             :
  :  H06D.3            I           I                                                             :
2 +---] [-----+-------+           +                                                             +
  :   M107   I         I           I                                                             :
  :   4904   I         I           I                                                             :
  : MOP10    I         I           I                                                             :
  :  H072.4  I         I           I                                                             :
2 +---] [-----+         +           +                                                             +
  :   M148               I           I                                                             :
  :   4301               I           I                                                             :
  : T22ME       2PCS     I           I                                                             :
  :  H076.5     H093.0   I           I                                                             :
2 +---] [-------] [-----+           +                                                             +
  :   M181       M408                I                                                             :
  :   9109       3805                I                                                             :
  : TBRS        AEXT.N      AUT.M    I                                                             :
  :  H095.2     H10D.4     H047.0    I                                                             :
2 +---] [-------] [-------]/[-----+                                                               +
  :   M426       Y16C       Y038                                                                   :
  :   4101       4105       2114                                                                   :
  : SSET.M      AL57                                                                   ITY.N     : Y AXIS INTERLOCK N/C
  :  H044.2     H0C7.1                                                                 H100.1    :  4303
3 +---]/[-------] [-----+-------------------------------------------------------------( )-----+
  :   Y022       F 57   I                                                                Y101      :
  :   2304       5601   I                                                                #1406     :
  : INTY.M      ADDIS   I                                                                          :
  :  H006.1     H095.4  I                                                                          :
3 +---]/[-------] [-----+                                                                          +
  :   X031       M428   I                                                                          :
  :    301       2201   I                                                                          :
  : RCTIT              I                                                                          :
  :  H06D.3            I                                                                          :
3 +---] [-----+-------+                                                                          +
  :   M107   I                                                                                     :
  :   4804   I                                                                                     :
  : MOP10    I                                                                                     :
  :  H072.4  I                                                                                     :
3 +---] [-----+                                                                                  +
  :   M148                                                                                       :
  :   4301                                                                                       :
  : SSET.M      AL57                                                                   ITZ.N     : Z AXIS INTERLOCK N/C
  :  H044.2     H0C7.1                                                                 H100.2    :  4304
4 +---]/[-------] [-----+-----------+-----------+-------------------------------------( )-----+
  :   Y022       F 57               I           I                                       Y102      :
  :   2304       5601               I           I                                       #1427     :
  : INTZ.M      MPCS        ADDIS   I           I                                                 :
  :  H006.2     H093.4      H095.4  I           I                                                 :
4 +---] [-------]/[-----+---] [-----+           +                                                 +
  :   X032       M412   I   M428    I           I                                                 :
  :    302       4304   I   2201    I           I                                                 :
  : INTZ.M      MPCS    I           I           I                                                 :
  :  H006.2     H093.4  I           I           I                                                 :
4 +---]/[-------] [-----+           +           +                                                 +
  :   X032       M412               I           I                                                 :
  :    302       4304               I           I                                                 :
  : T22ME       2PCS        PGAPS   I           I                                                 :
  :  H076.5     H093.0      H093.1  I           I                                                 :
4 +---] [-------] [-------] [-----+           +                                                 +
  :   M181       M408       M409    I           I                                                 :
  :   9109       3805       4304    I           I                                                 :
  : RCTIT                           I           I                                                 :
  :  H06D.3                         I           I                                                 :
4 +---] [-----+-------------------+           +                                                 +
  :   M107   I                                  I                                                 :
  :   4804   I                                  I                                                 :
  : MOP10    I                                  I                                                 :
  :  H072.4  I                                  I                                                 :
4 +---] [-----+                                 +                                                 +
  :   M148                                      I                                                 :
  :   4301                                      I                                                 :
  : TMEC        AEXT.N      TCME       ZPZ1.N   I                                                 :
  :  H073.1     H10D.4     H074.0     H130.2    I                                                 :
4 +---] [-------]/[-------]/[-------] [-----+                                                   +
  :   M153       Y16C       M160       X102                                                       :
  :   4102       4105       6505        502                                                       :
```

DRN. BY. K.MIURA	TITLE.	CONTROL.
DATE. 1.31.1986	VQC15/40	MAZATROL CAM M-2
CHK'D BY. T.HIRATA	YM2B453G	DRAWING NO.
DATE. 1.31.1986		4241681801G
APPR'D BY M.MURASE	SEQUENCE DIAGRAM	
DATE. 1.31.1986		SHEET. 43 OF. 103

REV.	DATE.	NAME.

YAMAZAKI MAZAK CORPORATION

```
  : MREV.M      AL57                                                                                IT4.N     : 4th AXIS INTERLOCK N/C
  : H040.2      H0C7.1                                                                              H100.3    :  4401
1 +---]/[-------] [---+-----------+-------------------------------------------------------------( )---+
  :   Y002        F 57  I           I                                                              Y103    :
  :   3309        5601  I           I                                                              #1440   :
  : INT4.M      ADDIS   I           I                                                                      :
  : H006.3      H095.4  I           I                                                                      :
1 +---] [-------] [---+             +                                                                      +
  :   X033        M428              I                                                                      :
  :    303        2201              I                                                                      :
  : IT4.N       RTUCT       NCROTS  I                                                                      :
  : H100.3      H0B4.4      H094.4  I                                                                      :
1 +---] [-------]/[---+---] [---+   +                                                                      +
  :   Y103        T 36  I   M420    I                                                                      :
  :   4401        3606  I   2908    I                                                                      :
  : IT4DT               I           I                                                                      :
  : H0B5.0              I           I                                                                      :
1 +---] [-------------+             +                                                                      +
  :    T 40                         I                                                                      :
  :   3602                          I                                                                      :
  : RCTIT                           I                                                                      :
  : H06D.3                          I                                                                      :
1 +---] [---+-----------------------+                                                                      +
  :   M107  I                                                                                              :
  :   4804  I                                                                                              :
  : MOP10   I                                                                                              :
  : H072.4  I                                                                                              :
1 +---] [---+                                                                                              +
  :   M148                                                                                                 :
  :   4301                                                                                                 :
  : LHTON                                                                                    WL.M      : WORK LIGHT
  : H08A.4                                                                                   H044.7    :  4402
2 +---] [-------------------------------------------------------------------------------------( )---+
  :   M340                                                                                     Y027    :
  :   8409                                                                                     #1442   :
  : MU2         MT0         MH0         *RST        EIA.N                                      PRENDME : PROGRAM END MEMORY
  : H061.4      H062.4      H060.5      H060.0      H143.5                                     H078.5  :  4403  4404 *5005
3 +---] [-------] [---+---] [---+---] [-------] [-------------------------------------------( )---+
  :    M 12       M 20  I    M  5  I    M  0        X19D                                        M197    :
  :   2414        2402  I   2307   I   2113         719                                         #1452   :
  : MUO         MT3     I           I                                                                    :
  : H061.2      H062.7  I           I                                                                    :
3 +---] [-------] [---+             +                                                                    +
  :    M 10       M 23              I                                                                    :
  :   2412        2405              I                                                                    :
  : PRENDME                         I                                                                    :
  : H078.5                          I                                                                    :
3 +---] [-----------------------+                                                                      +
  :   M197                                                                                                 :
  :   4403                                                                                                 :
  : PGEND.N                                                                                  +-------+ : PROGRAM END PULSE
  : H143.3                                                                                   I PLS   I : *2113 *2607 *2806  2809
4 +---] [---+-----------------------------------------------------------------------------I M131  I-+  4404  4405  4501 *4808
  :   X19B  I                                                                                I H070.3I :  4809 *4901
  :    718  I                                                                                +-------+ :
  : PRENDME I                                                                                          :
  : H078.5  I                                                                                          :
4 +---] [---+                                                                                          +
  :   M197  I                                                                                          :
  :   4403  I                                                                                          :
  :         I                                                                                          :
  : H0B7.6  I                                                                                          :
4 +---] [---+                                                                                          +
  :    T 62                                                                                              :
  :   10205                                                                                              :
  : OSPON       MU1         MT0         CYFLS       MH0         CSTBX       FHDBX       RST.B       AUT.M       FCST.N      CYFIN.M   : CYCLE FINISH LIGHT
  : H08B.5      H061.3      H062.4      H095.0      H060.5      H076.3      H076.2      H160.0      H047.0      H14A.5      H048.2    :  2905  4405
5 +---] [-------] [---+---] [-------] [-------] [---+---]/[-------]/[-------]/[-------] [-------]/[-------( )---+
  :   M349        M 11  I   M 20      M424        M  5  I   M179        M178        X0C0        Y038        X1D5        Y042      :
  :   8511        2413  I   2402      4405        2307  I   2201        2202        806         2114        802         #1473     :
  : MUO                 I                               I                                                                         :
  : H061.2              I                               I                                                                         :
5 +---] [-------------+                                 +                                                                         +
  :    M 10                                             I                                                                         :
  :   2412                                              I                                                                         :
  : CYFIN.M                                             I                                                                         :
  : H048.2                                              I                                                                         :
5 +---] [---+-----------------------------------------+                                                                         +
  :   Y042  I                                           I                                                                         :
  :   4405  I                                           I                                                                         :
  : PGEND.P I                                           I                                                                         :
  : H070.3  I                                           I                                                                         :
5 +---] [---+                                           +                                                                         +
  :   M131                                              I                                                                         :
  :   4404                                              I                                                                         :
  : EXRST.M     ROBOT                                   I                                                                         :
  : H003.6      H095.3                                  I                                                                         :
5 +---] [-------] [-----------------------------------+                                                                         +
  :   X01E        M427                                                                                                            :
  :    211        4405                                                                                                            :
```

REV.	DATE.	NAME.	

DRN. BY. K.MIURA	TITLE.	CONTROL.
DATE. 1.31.1986	VQC15/40	MAZATROL CAM M-2
CHK'D BY. T.HIRATA	YM2B453G	DRAWING NO.
DATE. 1.31.1986		42416818016
APPR'D BY. M.MURASE	SEQUENCE DIAGRAM	
DATE. 1.31.1986		SHEET. 44 OF. 103

YAMAZAKI MAZAK CORPORATION

```
  : ERS.N      ERSTT                                                          ERS.N     : EXTERNAL RESET NC
  :  H10D.1     H0B4.7                                                         H10D.1   :  #2113  4501  4502
1 *----] [----*----]/[-------------------------------------------------------( )----*
  :   Y169   I   T 39                                                          Y169    :
  :   4501   I   4502                                                         #1479    :
  : PGEND.P  I                                                                         :
  :  H070.3  I                                                                         :
1 *----] [----*                                                                        *
  :   M131   I                                                                         :
  :   4404   I                                                                         :
  : EXRST.M  I                                                                         :
  :  H003.6  I                                                                         :
1 *----] [----*                                                                        *
  :   X01E   I                                                                         :
  :    211   I                                                                         :
  : FESP.N   I                                                                         :
  :  H14A.6  I                                                                         :
1 *----] [----*                                                                        *
  :   X1D6                                                                             :
  :    803                                                                             :
  : ERS.N                                                                  +-------+ : EXTERNAL RESET TIMER
  :  H10D.1                                                                I  T 39 I : #4501  4502
2 *----] [-------------------------------------------------------------------I K   21I-*
  :   Y169                                                                 I H0A4.7I :
  :   4501                                                                 +-------+ :
  : MT2        MH0        MT2        MU3                                    EREND.N  : ERROR DETECT ON NC
  :  H062.6     H060.5     H062.6     H061.5                                 H108.3  :   4503
3 *----]/[----*----] [------] [------] [----*-----------------------------( )----*
  :   M 22   I   M  5      M 22       M 13   I                               Y143    :
  :   2404   I   2307      2404       2415   I                              #1491    :
  : MU4      I EREND.N                       I                                       :
  :  H061.6  I  H108.3                       I                                       :
3 *----]/[----*----] [-----------------------*                                        *
  :   M 14   I   Y143                                                                  :
  :   2416   I   4503                                                                  :
  : MH0      I                                                                         :
  :  H060.5  I                                                                         :
3 *----]/[----*                                                                        *
  :   M  5                                                                             :
  :   2307                                                                             :
  : SZS.M                                                                  SZS1     : SPINDLE ZERO SPEED 1
  :  H000.1                                                                H076.0  :  #2512  4504
4 *----] [-------------------------------------------------------------------( )----*
  :   X001                                                                   M176    :
  :    102                                                                  #1493    :
  : *SVFX.M                                                                SVFX.N   : X AXIS SERVO OFF N/C
  :  H00D.0                                                                H101.0  :   4505
5 *----]/[-------------------------------------------------------------------( )----*
  :   X068                                                                   Y108    :
  :    412                                                                  #1495    :
  : *SVFY.M                                                                SVFY.N   : Y AXIS SERVO OFF N/C
  :  H00D.1                                                                H101.1  :   4506
6 *----]/[-------------------------------------------------------------------( )----*
  :   X069                                                                   Y109    :
  :    413                                                                  #1497    :
  : *SVFZ.M                                                                SVFZ.N   : Z AXIS SERVO OFF N/C
  :  H00D.2                                                                H101.2  :   4507
7 *----]/[-------------------------------------------------------------------( )----*
  :   X06A                                                                   Y10A    :
  :    414                                                                  #1499    :
  : RTCLT      RTUCCD     NCROTS                                            SVF4.N   : 4th AXIS SERVO OFF N/C
  :  H0B4.5     H089.3     H094.4                                           H101.3  :   4508
8 *----] [----*----]/[------] [-------------------------------------------( )----*
  :   T 37   I   M331       M420                                            Y10B    :
  :   3607   I   3601       2908                                           #1504    :
  : SVF4.N   I                                                                         :
  :  H101.3  I                                                                         :
8 *----] [----*                                                                        *
  :   Y10B                                                                             :
  :   4508                                                                             :
  : M11.N                                                                  M11.M    : M BCD 11
  :  H135.0                                                                H048.4  :   4509
9 *----] [-------------------------------------------------------------------( )----*
  :   X128                                                                   Y044    :
  :    518                                                                  #1506    :
  : M12.N                                                                  M12.M    : M BCD 12
  :  H135.1                                                                H048.5  :   4510
10 *----] [------------------------------------------------------------------( )----*
  :   X129                                                                   Y045    :
  :    519                                                                  #1508    :
  : M14.N                                                                  M14.M    : M BCD 14
  :  H135.2                                                                H048.6  :   4511
11 *----] [------------------------------------------------------------------( )----*
  :   X12A                                                                   Y046    :
  :    520                                                                  #1510    :
  : M18.N                                                                  M18.M    : M BCD 18
  :  H135.3                                                                H048.7  :   4512
12 *----] [------------------------------------------------------------------( )----*
  :   X12B                                                                   Y047    :
  :    601                                                                  #1512    :
  : M21.N                                                                  M21.M    : M BCD 21
  :  H135.4                                                                H049.0  :   4513
13 *----] [------------------------------------------------------------------( )----*
  :   X12C                                                                   Y048    :
  :    602                                                                  #1514    :
  : M22.N                                                                  M22.M    : M BCD 22
  :  H135.5                                                                H049.1  :   4514
14 *----] [------------------------------------------------------------------( )----*
  :   X12D                                                                   Y049    :
  :    603                                                                  #1516    :
```

DRN. BY. K.MIURA	TITLE.	CONTROL.
DATE. 1.31.1986	V9C15/40	MAZATROL CAM M-2
CHK'D BY. T.HIRATA	YM2B453G	DRAWING NO.
DATE. 1.31.1986		4241681801G
APPR'D BY M.MURASE	SEQUENCE DIAGRAM	
DATE. 1.31.1986		SHEET. 45 OF. 103

REV.	DATE.	NAME.

YAMAZAKI MAZAK CORPORATION

```
  : M24.N                                                                                  M24.M     : M BCD 24
  :  H135.6                                                                                H049.2    :  4601
1 *---] [-------------------------------------------------------------------------------------( )---*
  :   X12E                                                                                   Y04A    :
  :    604                                                                                   #1518   :
  : M28.N                                                                                  M28.M     : M BCD 28
  :  H135.7                                                                                H049.3    :  4602
2 *---] [-------------------------------------------------------------------------------------( )---*
  :   X12F                                                                                   Y04B    :
  :    605                                                                                   #1520   :
  : M31.N                                                                                  M31.M     : M BCD 31
  :  H13C.0                                                                                H049.4    :  4603
3 *---] [-------------------------------------------------------------------------------------( )---*
  :   X160                                                                                   Y04C    :
  :    614                                                                                   #1522   :
  : M32.N                                                                                  M32.M     : M BCD 32
  :  H13C.1                                                                                H049.5    :  4604
4 *---] [-------------------------------------------------------------------------------------( )---*
  :   X161                                                                                   Y04D    :
  :    615                                                                                   #1524   :
  : M34.N                                                                                  M34.M     : M BCD 34
  :  H13C.2                                                                                H049.6    :  4605
5 *---] [-------------------------------------------------------------------------------------( )---*
  :   X162                                                                                   Y04E    :
  :    616                                                                                   #1526   :
  : M38.N                                                                                  M38.M     : M BCD 38
  :  H13C.3                                                                                H049.7    :  4606
6 *---] [-------------------------------------------------------------------------------------( )---*
  :   X163                                                                                   Y04F    :
  :    617                                                                                   #1528   :
  : MF                                                                                     +-------+ : MF DELAY TIMER
  :  H079.2                                                                                I  T 45 I :  4607  4608  4609
7 *---] [-------------------------------------------------------------------------------I K    1I-*
  :   M202                                                                                 I H0A5.5I :
  :   2102                                                                                 +-------+ :
  : DEN.N       MFDT        ROBOT                                                          MF.M      : M FUNCTION
  :  H132.3     H0B5.5      H095.3                                                         H043.5    :  4608  5001 #5006
8 *---] [---*---] [-------]/[-----------------------*-------------------------------------( )---*
  :   X113  I   T 45        M427                    I                                      Y01D    :
  :    509  I   4607        4405                    I                                      #1543   :
  :         I                                        I                                              :
  :  H09F.5 I                                        I                                              :
8 *---]/[---*                                        *                                              :
  :   M509                                           I                                              :
  :   4608                                           I                                              :
  : MFA.M       M28.N       M24.N       M22.N       M21.N       ROBOT                I              :
  :  H043.4     H135.7      H135.6      H135.5      H135.4      H095.3               I              :
8 *---] [-------] [-------]/[-------]/[-------]/[-------] [---*                                    :
  :   Y01C      X12F        X12E        X12D        X12C        M427                               :
  :   4609       605         604         603         602        4405                               :
  : DEN.N       MFDT        M38.N       M34.N       M32.N       M31.N                              :
  :  H132.3     H0B5.5      H13C.3      H13C.2      H13C.1      H13C.0                             :
9 *---] [---*---] [-------]/[-------]/[-------]/[-------]/[-------------------------------------( )---*
  :   X113  I   T 45        X163        X162        X161        X160                   MFA.M     : MHO M FUNCTION
  :    509  I   4607         617         616         615         614                   H043.4    :  4608  4609
  :         I                                                                            Y01C    :
  :  H09F.5 I                                                                            #1551   :
9 *---]/[---*                                                                                    :
  :   M509                                                                                       :
  :   4608                                                                                       :
  : ZPX1.N                                                                                 ZPX.M     : X ZERO POSITION
  :  H130.0                                                                                H045.0    :  4610
10 *---] [-------------------------------------------------------------------------------------( )---*
  :   X100                                                                                   Y028    :
  :    420                                                                                   #1553   :
  : ZPY1.N                                                                                 ZPY.M     : Y ZERO POSITION
  :  H130.1                                                                                H045.1    :  4611
11 *---] [-------------------------------------------------------------------------------------( )---*
  :   X101                                                                                   Y029    :
  :    501                                                                                   #1555   :
  : ZPZ1.N                                                                                 ZPZ.M     : Z ZERO POSITION
  :  H130.2                                                                                H045.2    :  4612
12 *---] [-------------------------------------------------------------------------------------( )---*
  :   X102                                                                                   Y02A    :
  :    502                                                                                   #1557   :
  : ZP41.N                                                                                 ZP4.M     : 4 ZERO POSITION
  :  H130.3                                                                                H045.3    :  4613
13 *---] [-------------------------------------------------------------------------------------( )---*
  :   X103                                                                                   Y02B    :
  :    503                                                                                   #1559   :
  : ZPZ2.N                                                                                 ZPZ2.M    : Z ZERO POSITION 2nd
  :  H131.2                                                                                H045.6    :  4614
14 *---] [-------------------------------------------------------------------------------------( )---*
  :   X10A                                                                                   Y02E    :
  :    506                                                                                   #1561   :
  : AL1         HYD.M                                                                      MRDY.M    : MACHINE READY
  :  H0C0.1     H044.4                                                                     H048.0    :  4615
15 *---]/[-------] [-------------------------------------------------------------------------( )---*
  :   F  1      Y024                                                                       Y040    :
  :   5105      2302                                                                       #1564   :
  : *RST                                                                                   RST.M     : RESET OUT
  :  H060.0                                                                                H048.1    :  4616
16 *---]/[-------------------------------------------------------------------------------------( )---*
  :   M  0                                                                                   Y041    :
  :   2113                                                                                   #1566   :
```

				DRN. BY. K.MIURA	TITLE.	CONTROL.
				DATE. 1.31.1986	VQC15/40	MAZATROL CAM M-2
				CHK'D BY. T.HIRATA	YM2B453G	DRAWING NO.
				DATE. 1.31.1986		42416818010
				APPR'D BY. M.MURASE	SEQUENCE DIAGRAM	
				DATE. 1.31.1986		SHEET. 46 OF. 103
REV.	DATE.	NAME.		YAMAZAKI MAZAK CORPORATION		

```
  : MFAIL.L     MOP                                                                    MMAL1.M  : MACHINE MALFUNCTION 1
  :  H11D.4     H073.7                                                                  H047.7  :   4701
1 *---] [-------]/[---*-------------------------------------------------------------( )---*
  :   Y1EC      M159   I                                                                Y03F   :
  :   6502      6202   I                                                               #1570   :
  : NCAL               I                                                                       :
  :  H07F.3            I                                                                       :
1 *---] [------------*                                                                        :
  :   M251                                                                                    :
  :   4811                                                                                    :
  : MNN4        MND9        AUT.M      *RST       MPCS       PCLCD                     PUCCD  : PALLET UNCLAMP COMMAND
  :  H086.0     H087.7      H047.0     H060.0     H093.4     H047.5                     H047.1 :   4702 *4703  8406
2 *---] [-------]/[---*---]/[-------]/[-------]/[-------]/[-------]/[-------------------( )---*
  :   M304      M319   I    Y038       M  0       M412       Y03D                       Y039   :
  :   8214      8307   I    2114       2113       4304       4703                      #1580   :
  : PUCCD       EXFIN  I                                                                       :
  :  H047.1     H003.7 I                                                                       :
2 *---] [-------]/[---*                                                                        :
  :   Y039      X01F                                                                           :
  :   4702       212                                                                           :
  : MNN4        MND8        AUT.M      *RST       MPCS       PUCCD                     PCLCD  : PALLET CLAMP COMMAND
  :  H086.0     H087.6      H047.0     H060.0     H093.4     H047.1                     H047.5 :  *4702  4703  8405
3 *---] [-------]/[---*---]/[-------]/[-------]/[-------]/[-------]/[-------------------( )---*
  :   M304      M318   I    Y038       M  0       M412       Y039                       Y03D   :
  :   8214      8306   I    2114       2113       4304       4702                      #1590   :
  : PCLCD       EXFIN  I                                                                       :
  :  H047.5     H003.7 I                                                                       :
3 *---] [-------]/[---*                                                                        :
  :   Y03D      X01F                                                                           :
  :   4703       212                                                                           :
  : FHDBX                                                                              FHD.PB  : FEED HOLD PB.
  :  H076.2                                                                            H047.2  :   4704
4 *---] [-------------------------------------------------------------------------( )---*
  :   M178                                                                             Y03A   :
  :   2202                                                                            #1592   :
  : SP.L                                                                               FHDL.M  : FEED HOLD LED
  :  H119.1                                                                            H045.5  :   4705
5 *---] [-------------------------------------------------------------------------( )---*
  :   Y1C9                                                                             Y02D   :
  :   8803                                                                            #1594   :
  : CSTBX                                                                              CST.PB  : CYCLE START PB.
  :  H076.3                                                                            H047.4  :   4706
6 *---] [-------------------------------------------------------------------------( )---*
  :   M179                                                                             Y03C   :
  :   2201                                                                            #1596   :
  : ST.L                                                                               CSTL.M  : CYCLE START LED
  :  H119.0                                                                            H047.3  :   4707
7 *---] [-------------------------------------------------------------------------( )---*
  :   Y1C8                                                                             Y03B   :
  :   8802                                                                            #1598   :
  : MT5         MU5         RCTS                                                       M55ME  : M 55 MEMORY
  :  H063.1     H061.7      H096.2                                                      H06D.7 : *2704  4708  4710  4711
8 *---] [-------]/[---*---] [-------------------------------------------------------( )---*   4801  4802  4803  4804
  :   M 25      M 15   I    M434                                                        M111   :
  :   2407      2417   I    4708                                                       #1606   :
  : MT5         M55ME  I                                                                       :
  :  H063.1     H06D.7 I                                                                       :
8 *---]/[---*---] [---*                                                                        :
  :   M 25   I  M111                                                                           :
  :   2407   I  4708                                                                           :
  : MU6         I                                                                              :
  :  H062.0     I                                                                              :
8 *---]/[---*                                                                                  :
  :   M 16                                                                                     :
  :   2418                                                                                     :
  : RCTLS                                                                                      :
  :  H006.4                                                                            I  T 47 I :   4709  4710  4802  4804
9 *---]/[-------------------------------------------------------------------------I K    2I-*
  :   X034                                                                             I HOA5.7I :
  :    304                                                                             +-------+ :
  : SMR.M                   RCTSTEP2   M55ME      *RST                                RCTSTEP1 : RECESSING TOOL STEP 1
  :  H041.2     H0B5.7      H06D.4     H06D.7     H060.0                              H06D.5  :   4710  4711
10 *---] [-------] [---*---]/[-------] [-------] [-------------------------------------( )---*
  :   Y00A      T 47   I    M108       M111       M  0                                M109   :
  :   2705      4709   I    4711       4708       2113                               #1616   :
  : RCTSTEP1           I                                                                       :
  :  H06D.5            I                                                                       :
10 *---] [------------*                                                                        :
  :   M109                                                                                     :
  :   4710                                                                                     :
  : RCTSTEP1    SMR.M       RCTLS      SORT       M55ME      *RST                     RCTSTEP2 : RECESSING TOOL STEP 2
  :  H06D.5     H041.2      H006.4     H0B0.6     H06D.7     H060.0                     H06D.4  :   2805 *4710  4711 *4801
11 *---] [-------] [---*---] [-------]/[-------] [-------] [-------------------------------( )---*
  :   M109      Y00A   I    X034       T  6       M111       M  0                       M108   :
  :   4710      2705   I    304        2807       4708       2113                      #1624   :
  : RCTSTEP2           I                                                                       :
  :  H06D.4            I                                                                       :
11 *---] [------------*                                                                        :
  :   M108                                                                                     :
  :   4711                                                                                     :
```

DRN. BY. K.MIURA	TITLE.	CONTROL.
DATE. 1.31.1986	V9C15/40	MAZATROL CAM M-2
CHK'D BY. T.HIRATA	YM2B453G	DRAWING NO.
DATE. 1.31.1986		42416818016
APPR'D BY. M.MURASE	SEQUENCE DIAGRAM	
DATE. 1.31.1986		SHEET. 47 OF. 103

REV.	DATE.	NAME.

YAMAZAKI MAZAK CORPORATION

```
  : SFWCD      SMR.M      ORA1       M55ME      #RST                                                  RECMEM    : RECESSING TOOL AUTO MEMORY
  :  H069.0     H041.2     H000.3     H06D.7     H060.0                                               H068.6    :   4801 #5005
1 +---] [----+---] [----+---]/[----+---] [-------] [-----------------------------------------------------( )----+
  :   M 72   I   Y00A   I    X003   I   M111       M 0                                                  M 70      :
  :   2506   I   2705   I     104   I   4708       2113                                                 #1634     :
  : SRVCD    I          I RCTSTEP2  I                                                                           :
  :  H069.1  I          I  H06D.4   I                                                                           :
1 +---] [----+          +---]/[----+                                                                           +
  :   M 73               I   M108                                                                               :
  :   2507               I   4711                                                                               :
  : RECMEM               I                                                                                      :
  :  H068.6              I                                                                                      :
1 +---] [-------------+                                                                                        +
  :   M 70                                                                                                      :
  :   4801                                                                                                      :
  : M55ME                    SMR.M                                                                RCTAL2    : RECESSING TOOL ALARM 2
  :  H06D.7      H0B5.7      H041.2                                                                H06D.6    :  #2506 #2507  4802  6002
2 +---] [-------] [-------]/[-----------------------------------------------------------------------( )----+  #6204
  :   M111        T 47        Y00A                                                                  M110      :
  :   4708        4709        2705                                                                  #1638     :
  : SJOG.B       AUT.M       M55ME                                                                 RCTAL1    : RECESSING TOOL ALARM 1
  :  H164.2      H047.0      H06D.7                                                                H06D.2    :  4803  6002
3 +---] [-------]/[-------] [-----------------------------------------------------------------------( )----+
  :   X0E2        Y038        M111                                                                  M106      :
  :    916        2114        4708                                                                  #1642     :
  : M55ME                    OTR.B      RCTS                                                       RCTIT     : RECESSING TOOL INTERLOCK
  :  H06D.7      H0B5.7      H160.5     H096.2                                                      H06D.3    :  4302  4303  4304  4401
4 +---] [-------] [-------]/[-------] [-----------------------------------------------------------------( )----+  4804
  :   M111        T 47        X0C5       M434                                                        M107      :
  :   4708        4709        811        4708                                                        #1647     :
  : HYD.M                                                                                            MCRDY.N   : MACHINE READY
  :  H044.4                                                                                          H102.7    :  4805
5 +---] [-----------------------------------------------------------------------------------------------( )----+
  :   Y024                                                                                              Y117      :
  :   2302                                                                                              #1649     :
  : ZPX1.N       ZPY1.N      ZPZ1.N     ZP41.N                                                      AZP.N     : ALL AXIS ZERO POSITION
  :  H130.0      H130.1      H130.2     H130.3                                                      H102.6    :  4806 #4903  8004
6 +---] [-------] [-------] [-------] [-----------------------------------------------------------------( )----+
  :   X100        X101        X102       X103                                                        Y116      :
  :    420        501         502        503                                                         #1654     :
  : ST.L                                                                                             FSTL.N    : FMS CYCLE START
  :  H119.0                                                                                          H102.3    :  4807
7 +---] [-----------------------------------------------------------------------------------------------( )----+
  :   Y1C8                                                                                              Y113      :
  :   8802                                                                                              #1656     :
  : MU9          MT5         MH0        PGEND.P    #RST                                                PERDY.N   : PROGRAM END READY
  :  H062.3      H063.1      H060.5     H070.3     H060.0                                              H102.2    :  4808
8 +---] [-------] [-------] [---+---]/[-------] [-----------------------------------------------------( )----+
  :   M 19        M 25        M 5    I   M131       M 0                                                 Y112      :
  :   2501        2407        2307   I   4404       2113                                                #1663     :
  : PERDY.N                          I                                                                          :
  :  H102.2                          I                                                                          :
8 +---] [-----------------------+                                                                              +
  :   Y112                                                                                                      :
  :   4808                                                                                                      :
  : PEND.N       STL.N                                                                               PEND.N    : PROGRAM END
  :  H102.1      H132.1                                                                              H102.1    :  4809
9 +---] [-------]/[---+-------------------------------------------------------------------------------( )----+
  :   Y111        X111   I                                                                              Y111      :
  :   4809        507    I                                                                              #1670     :
  : EXRST.M      ROBOT   I                                                                                        :
  :  H003.6      H095.3  I                                                                                        :
9 +---] [-------] [---+                                                                                        +
  :   X01E        M427   I                                                                                        :
  :    211        4405   I                                                                                        :
  : PGEND.P              I                                                                                        :
  :  H070.3              I                                                                                        :
9 +---] [-------------+                                                                                        +
  :   M131                                                                                                      :
  :   4404                                                                                                      :
  : PW1.M                                                                                            +-------+ :
  :  H044.0                                                                                          I MOV   I :
10 +---] [-----------------------------------------------------------------------------------------------I K4X148I-+
  :   Y020                                                                                              I   D 5I :
  :   2101                                                                                              +-------+ :
  : PW1.M        +-------+                                                                            NCAL      : NC ALARM
  :  H044.0      I  <    I                                                                            H07F.3    :  4701  4811  4812
11 +---] [-------I K    0I-----------------------------------------------------------------------------( )----+
  :   Y020       I   D 5I                                                                              M251      :
  :   2101       +-------+                                                                             #1679     :
  : MFAIL.L                                                                                          MFL.N     : MACHINE FAIL
  :  H11D.4                                                                                          H103.3    :  4812
12 +---] [---+-------------------------------------------------------------------------------------------( )----+
  :   Y1EC   I                                                                                          Y11B      :
  :   6502   I                                                                                          #1683     :
  : NCAL     I                                                                                                      :
  :  H07F.3  I                                                                                                      :
12 +---] [---+                                                                                                     +
  :   M251   I                                                                                                      :
  :   4811   I                                                                                                      :
  : MOP      I                                                                                                      :
  :  H073.7  I                                                                                                      :
12 +---] [---+                                                                                                     +
  :   M159                                                                                                          :
  :   6202                                                                                                          :
```

				DRN. BY. K.MIURA	TITLE.	CONTROL.
				DATE. 1.31.1986	V9C15/40	MAZATROL CAM M-2
				CHK'D BY. T.HIRATA	YM2B453G	DRAWING NO.
				DATE. 1.31.1986		4241681801G
				APPR'D BY. M.MURASE	SEQUENCE DIAGRAM	
				DATE. 1.31.1986		SHEET. 48 OF. 103
REV.	DATE.	NAME.		YAMAZAKI MAZAK CORPORATION		

```
  : WFL.N      PGEND.P    RST.B                                                    WFL.N     : W FAIL
  :  H103.1     H070.3     H160.0                                                   H103.1    :  4901
1 *---] [--------]/[--------]/[-----*-------------------------------------------------( )-----*
  :   Y119       M131       X0C0   I                                                  Y119    :
  :   4901       4404        806   I                                                 #1689    :
  : ALTBK.N                        I                                                          :
  :  H141.4                        I                                                          :
1 *---] [-----*-------------------*                                                           *
  :   X18C   I                                                                                :
  :    710   I                                                                                :
  : TLOVR.N  I                                                                                :
  :  H141.3  I                                                                                :
1 *---] [-----*                                                                               *
  :   X18B                                                                                    :
  :    709                                                                                    :
  : AUT.N      AUTOME2    *RST       FMSS                                             AUTOME2   : AUTO MEMORY 2
  :  H140.0     H07F.0     H060.0     H095.5                                           H07F.0    :  4902  8004
2 *---]/[--------] [-----*---] [--------] [-------------------------------------------( )-----*
  :   X180       M248   I   M  0       M429                                             M248    :
  :    618       4902   I   2113      4902                                            #1695    :
  : FZRN.N              I                                                                       :
  :  H14A.4             I                                                                       :
2 *---] [-------------*                                                                         *
  :   X1D4                                                                                    :
  :    801                                                                                    :
  : FZRN.N     AZP.N      FMSS                                                     ZRNAX     : ZERO RETURN AUX
  :  H14A.4     H102.6     H095.5                                                   H07F.1    :  4903  4904  4905  4906
3 *---] [-----*---]/[--------] [-------------------------------------------------( )-----*   :  4907  7503  7704  7803
  :   X1D4   I   Y116       M429                                                     M249    :  7909  8001 *8004
  :    801   I   4806       4902                                                    #1700    :
  : ZRNAX    I                                                                                :
  :  H07F.1  I                                                                                :
3 *---] [-----*                                                                               *
  :   M249                                                                                    :
  :   4903                                                                                    :
  : -Z.N       ZRNAX                                                                 +-------+ : FMS ZERO RETURN TIMER -Z
  :  H111.5     H07F.1                                                               I  T 48 I :  4904  4908
4 *---] [--------] [-------------------------------------------------------------------I K    5I-*
  :   Y18D       M249                                                                 I H0A6.0I :
  :   7803       4903                                                                 +-------+ :
  : -Y.N       ZRNAX                                                                 +-------+ : FMS ZERO RETURN TIMER -Y
  :  H111.3     H07F.1                                                               I  T 49 I :  4905  4909
5 *---] [--------] [-------------------------------------------------------------------I K    5I-*
  :   Y18B       M249                                                                 I H0A6.1I :
  :   7704       4903                                                                 +-------+ :
  : -X.N       ZRNAX                                                                 +-------+ : FMS ZERO RETURN TIMER -X
  :  H111.1     H07F.1                                                               I  T 50 I :  4906  4910
6 *---] [--------] [-------------------------------------------------------------------I K    5I-*
  :   Y189       M249                                                                 I H0A6.2I :
  :   7909       4903                                                                 +-------+ :
  : -4.N       ZRNAX                                                                 +-------+ : FMS ZERO RETURN TIMER -4
  :  H111.7     H07F.1                                                               I  T 51 I :  4907  4911
7 *---] [--------] [-------------------------------------------------------------------I K    5I-*
  :   Y18F       M249                                                                 I H0A6.3I :
  :   8001       4903                                                                 +-------+ :
  : FZRT-Z     -Z.N                                                                   -ZMOP     : -Z MISS OPERATION
  :  H0B6.0     H111.5                                                                 H07E.4    :  4908  7801 *7803
8 *---] [--------] [-----*-------------------------------------------------------------( )-----*
  :    T 48      Y18D   I                                                                 M244    :
  :   4904       7803   I                                                                #1722    :
  : -ZMOP      ZPZ1.N   I                                                                         :
  :  H07E.4     H130.2  I                                                                         :
8 *---] [--------]/[-----*                                                                       *
  :   M244       X102                                                                             :
  :   4908        502                                                                             :
  : FZRT-Y     -Y.N                                                                   -YMOP     : -Y MISS OPERATION
  :  H0B6.1     H111.3                                                                 H07E.3    :  4909  7703 *7704
9 *---] [--------] [-----*-------------------------------------------------------------( )-----*
  :    T 49      Y18B   I                                                                 M243    :
  :   4905       7704   I                                                                #1728    :
  : -YMOP      ZPY1.N   I                                                                         :
  :  H07E.3     H130.1  I                                                                         :
9 *---] [--------]/[-----*                                                                       *
  :   M243       X101                                                                             :
  :   4909        501                                                                             :
  : FZRT-X     -X.N                                                                   -XMOP     : -X MISS OPERATION
  :  H0B6.2     H111.1                                                                 H07E.6    :  4910  7908 *7909
10 *---] [--------] [-----*-------------------------------------------------------------( )-----*
  :    T 50      Y189   I                                                                 M246    :
  :   4906       7909   I                                                                #1734    :
  : -XMOP      ZPX1.N   I                                                                         :
  :  H07E.6     H130.0  I                                                                         :
10 *---] [--------]/[-----*                                                                      *
  :   M246       X100                                                                             :
  :   4910        420                                                                             :
  : FZRT-4     -4.N                                                                   -4MOP     : -4 MISS OPERATION
  :  H0B6.3     H111.7                                                                 H07E.5    :  4911  7910 *8001
11 *---] [--------] [-----*-------------------------------------------------------------( )-----*
  :    T 51      Y18F   I                                                                 M245    :
  :   4907       8001   I                                                                #1740    :
  : -4MOP      ZP41.N   I                                                                         :
  :  H07E.5     H130.3  I                                                                         :
11 *---] [--------]/[-----*                                                                      *
  :   M245       X103                                                                             :
  :   4911        503                                                                             :
```

DRN. BY. K.MIURA	TITLE.	CONTROL.
DATE. 1.31.1986	VQC15/40	MAZATROL CAM M-2
CHK'D BY. T.HIRATA	YM2B453G	DRAWING NO.
DATE. 1.31.1986		4241681801G
APPR'D BY M.MURASE	SEQUENCE DIAGRAM	
DATE. 1.31.1986		SHEET. 49 OF. 103

REV.	DATE.	NAME.

YAMAZAKI MAZAK CORPORATION

```
  : MF.M        EXFIN       MF          ROBOT                                                  M6,7FINX  : M60,70 FINISH SIGNAL AUX
  :  H043.5     H003.7      H079.2      H095.3                                                  H091.0   :   5001  5006
1 #---] [-------]/[---+---] [-------] [-------------------------------------------------------( )---#
  :   Y01D       X01F   I   M202        M427                                                    M392    :
  :   4608        212   I   2102        4405                                                    #1746   :
  : M6,7FINX            I
  :  H091.0             I
1 #---] [-------------#
  :   M392              *
  :   5001              :
  : AUT.N       STL.N       ATCFINME                                                           FINF     : FINISH SIGNAL F
  :  H140.0     H132.1      H091.3                                                              H06E.5   :   2203  5002  5008 *6705
2 #---] [---+---] [---+---] [-------------------------------------------------------( )---#  *8109 *8802  8803
  :   X180   I   X111   I   M395                                                                M117    :
  :    618   I    507   I   7901                                                                #1752   :
  : MDI.N     I         I
  :  H140.1   I         I
2 #---] [---#           *
  :   X181              I
  :    619              I
  : FINF                I
  :  H06E.5             I
2 #---] [-------------#
  :   M117              *
  :   5002              :
  :           MF                                                                               +-------+ : SERVO OFF 4 TIMER
  :  H09F.5    H079.2                                                                          I  T 41 I :   5003  5006
3 #---]/[---+---] [-------------------------------------------------------------------------I K    3I-#
  :   M509   I   M202                                                                          I HOA5.1I :
  :   4608   I   2102                                                                          +-------+ :
  : DEN.N     I
  :  H132.3   I
3 #---] [---#
  :   X113              *
  :    509              :
  : MU8         MT3         MH0                                                                :
  :  H062.2     H062.7      H060.5                                                              H06F.6   :   5004  5006  5007
4 #---] [---+---] [-------] [-------------------------------------------------------( )---#
  :   M 18   I   M 23       M  5                                                                M126    :
  :   2420   I   2405       2307                                                                #1762   :
  : MU9       I
  :  H062.3   I
4 #---] [---#
  :   M 19              *
  :   2501              :
  : MOSME       UOME2       SOME2       TAPME       IND.M       RECMEM      PRENDME              FINA     : FINISH SIGNAL A
  :  H06A.0     H06B.3      H06B.2      H066.7      H089.5      H068.6      H078.5               H06E.0   :   5005  5007
5 #---]/[-------]/[-------]/[-------]/[-------]/[-------]/[-------]/[-------------------------( )---#
  :   M 80       M 91       M 90       M 55       M333       M 70       M197                    M112    :
  :   2303       2809       2805       2512       3701       4801       4403                    #1770   :
  : SVF4T       EXFIN       M6,7FINX    MGCOME2     AEXT-ME     ARET-ME     FACSBK               FINB     : FINISH SIGNAL B
  :  H0B5.1     H003.7      H091.0      H065.7      H070.0      H070.1      H072.3               H06E.1   :   5006  5007
6 #---] [---+---] [---+---] [---+---]/[-------]/[-------]/[-------]/[-------------------------( )---#
  :   T 41   I   X01F   I   M392   I   M 47       M128       M129       M147                    M113    :
  :   5003   I    212   I   5001   I   2909       4101       4103       6101                    #1784   :
  :          I         I MF.M      I
  :  H06F.6  I         I  H043.5   I
6 #---] [---#           #---]/[---#
  :   M126              I   Y01D   I
  :   5004              I   4608   I
  : TAP.N               I ROBOT    I
  :  H13B.2             I  H095.3  I
6 #---] [-------------#---]/[---#
  :   X15A                M427   I
  :    608                4405   I
  : EXTFINS                     I
  :  H093.5                     I
6 #---] [-----------------------#
  :   M413              *
  :   3006              :
  : MFT         MF          FINA        FINB        PCFIN                                      FIND     : FINISH SIGNAL D
  :  H0B0.1     H079.2      H06E.0      H06E.1      H091.1                                      H06E.3   :   5007  5008
7 #---] [---+---] [-------] [-------] [---+---] [---+-------------------------------------( )---#
  :   T  1   I   M202       M112       M113   I   M393   I                                     M115    :
  :   2503   I   2102       5005       5006   I   10204  I                                     #1794   :
  :          I                             I 2PCS      I
  :  H06F.6  I                             I  H093.0   I
7 #---] [---#                             #---]/[---#
  :   M126              *                     M408   I
  :   5004              :                     3805   I
  : MF                  :                            I
  :  H079.2             :                            I
7 #---]/[-----------------------------------------#
  :   M202              *
  :   2102              :
  : TF          TFT         TSME        FIND                                                    FINE     : FINISH SIGNAL E
  :  H079.4     H0B0.3      H064.1      H06E.3                                                  H06E.4   :   5008  5101
8 #---] [-------] [-------]/[---+---] [-------------------------------------------------( )---#
  :   M204       T  3       M 33   I   M115                                                    M116    :
  :   2104       2505       3303   I   5007                                                    #1801   :
  : FINF                           I
  :  H06E.5                        I
8 #---] [---#-----------------#
  :   M117   I                  *
  :   5002   I                  :
  : TF       I                  :
  :  H079.4  I                  :
8 #---]/[---#                   *
  :   M204                      :
  :   2104                      :
```

		DRN. BY. K.MIURA	TITLE.
		DATE. 1.31.1986	VQC15/40
		CHK'D BY. T.HIRATA	YM2B453G
		DATE. 1.31.1986	
		APPR'D BY. M.MURASE	SEQUENCE DIAGRAM
		DATE. 1.31.1986	
REV.	DATE.	NAME.	

CONTROL. MAZATROL CAM M-2

DRAWING NO. 42416819016

SHEET. 50 OF. 103

YAMAZAKI MAZAK CORPORATION

```
  : MF          FINE                                                          FIN.N     : FIN SIGNAL NC
  :  H079.2     H06E.4                                                         H10D.0   :  5101
1 *---] [-----*---] [-----*-------------------------------------------------------( )---*
  :   M202  I   M116  I                                                          Y168   :
  :   2102  I   5008  I                                                         #1808   :
  : TF      I FIN.N     I                                                               :
  :  H079.4 I   H10D.0  I                                                               :
1 *---] [-----*---] [-----*                                                             *
  :   M204  I   Y168                                                                    :
  :   2104  I   5101                                                                    :
  : SF      I                                                                           :
  :  H079.3 I                                                                           :
1 *---] [-----*                                                                         *
  :   M203                                                                              :
  :   2103                                                                              :
  : FHDBX       RST.B       FESP.N                                              *ALRST   : ALARM RESET
  :  H076.2     H160.0      H14A.6                                               H06F.7  :  3702 4107 4201 4202
2 *---]/[-------]/[---------]/[-----------------------------------------------------( )---*  5102 5103 5105 5107
  :   M178      X0C0        X1D6                                                  M127   :  5110 5201 5204
  :   2202       806         803                                                 #1812   :
  :             THMABNS                                                          AL0    :
  :  H143.7     H096.7                                                           H0C0.0  :  2206 4301 5103 6301
3 *---] [-------]/[-----*-----------------------------------------------------------( )---*
  :   X19F      M439  I                                                            F 0   :
  :    720      5103  I                                                           #1818   :
  : *ALRST      AL0   I                                                                   :
  :  H06F.7     H0C0.0 I                                                                  :
3 *---] [-------] [-----*                                                               *
  :   M127      F 0                                                                     :
  :   5102      5103                                                                    :
  : MPWS.M      HYD.M                                                     +-------+     : MACHINE POWER SUPLLY TMR.
  :  H00F.0     H044.4                                                    I T 10 I     :  5104 5105
4 *---]/[-------] [-----------------------------------------------------------I K  20I---*
  :   X078      Y024                                                      I H0A1.2I     :
  :    416      2302                                                      +-------+     :
  : *ALRST      AL1                                                       AL1           : HYDRO. PRESSURE TOO LOW
  :  H06F.7     H0C0.1                                                     H0C0.1       :  *4615 5105 5702 6301
5 *---] [-------] [-----*-----------------------------------------------------------( )---*
  :   M127      F 1   I                                                            F 1   :
  :   5102      5105  I                                                           #1826   :
  : MPWST             I                                                                   :
  :  H0B1.2           I                                                                   :
5 *---] [-------------*                                                                 *
  :   T 10                                                                              :
  :   5104                                                                              :
  : MREV.M      MFWD.M      PTX         MOP12                                 +-------+     : MAG. ANPOSITION OFF TIMER
  :  H040.2     H040.3      H078.6      H0CB.3                                I T 11 I     :  5106 5107
6 *---]/[-------]/[---------]/[---------]/[-----------------------------------I K 100I---*
  :   Y002      Y003        M198        F 91                                  I H0A1.3I     :
  :   3309      3308        3012        6104                                  +-------+     :
  : AUT.M       *ALRST      AL2                                               AL2           : DRUM INDEX PROX OFF MALF.
  :  H047.0     H06F.7      H0C0.2                                             H0C0.2       :  *3307 5107 6301
7 *---] [-----*---] [-------] [-----*-----------------------------------------------( )---*
  :   Y038  I   M127        F 2   I                                            F 2   :
  :   2114  I   5102        5107  I                                           #1840   :
  : TSINTSS I                     I                                                     :
  :  H003.3 I                     I                                                     :
7 *---]/[-----*                   *                                                     *
  :   X01B  I                     I                                                     :
  :    208  I                     I                                                     :
  : DITLS   I                     I                                                     :
  :  H093.3 I                     I                                                     :
7 *---]/[-----*                   *                                                     *
  :   M411                        I                                                     :
  :   3001                        I                                                     :
  : MIPOFT                        I                                                     :
  :  H0B1.3                       I                                                     :
7 *---] [-----*-------------------*                                                     *
  :   T 11  I                                                                           :
  :   5106  I                                                                           :
  : TSOFFAL I                                                                           :
  :  H067.5 I                                                                           :
7 *---] [-----*                                                                         *
  :   M 61                                                                              :
  :   3306                                                                              :
  : TUCPRS      TUC.M       TUCPRS                                            ALTC/U    : ALARM TOOL CLAMP/UNCLAMP
  :  H003.1     H044.5      H003.1                                             H071.0   :  5108 *5109
8 *---]/[-----*---] [-------] [-----*-----------------------------------------------( )---*
  :   X019  I   Y025        X019  I                                            M136   :
  :    206  I   3412         206  I                                           #1849   :
  : TCPRS   I TCPRS       TUC.M   I                                                     :
  :  H003.0 I  H003.0      H044.5  I                                                     :
8 *---]/[-----*---] [-------]/[-----*                                                   *
  :   X018      X018        Y025                                                        :
  :    205       205        3412                                                        :
  : HYD.M       ALTC/U                                                    +-------+     : ALARM TOOL CL/UCL TIMER
  :  H044.4     H071.0                                                    I T 12 I     :  5109 5110 5201 5208
9 *---] [-------]/[-----------------------------------------------------------I K  50I---*  5209
  :   Y024      M136                                                      I H0A1.4I     :
  :   2302      5108                                                      +-------+     :
  : ALTC/UT     TCPRS       TUC.M                                             AL25      : TOOL CLAMP PROX ON MALF.
  :  H0B1.4     H003.0      H044.5                                             H0C3.1   :  5110 6301
10 *---] [-------] [-------] [-----*-----------------------------------------------( )---*
  :   T 12      X018        Y025  I                                            F 25   :
  :   5109       205        3412  I                                           #1860   :
  : *ALRST      AL25                I                                                     :
  :  H06F.7     H0C3.1              I                                                     :
10 *---] [-------] [-------------*                                                       *
  :   M127      F 25                                                                    :
  :   5102      5110                                                                    :
```

		DRN. BY. K.MIURA	TITLE.
		DATE. 1.31.1986	V0C15/40
		CHK'D BY. T.HIRATA	YM2B453G
		DATE. 1.31.1986	
		APPR'D BY M.MURASE	SEQUENCE DIAGRAM
		DATE. 1.31.1986	
REV.	DATE.	NAME.	

CONTROL. MAZATROL CAM M-2

DRAWING NO. 4241681S01G

SHEET. 57 OF. 103

YAMAZAKI MAZAK CORPORATION

```
  : TCPRS      TUC.M      ALTC/UT                                                    AL26      : TOOL CLAMP PROX OFF MALF.
  : H003.0     H044.5     H0B1.4                                                     H0C3.2    :  5201  6301
1 *---]/[------]/[------] [---*------------------------------------------------------( )-----*
  :   X018       Y025       T 12   I                                                  F 26      :
  :    205       3412       5109   I                                                  #1867     :
  : *ALRST     AL26                I                                                            :
  : H06F.7     H0C3.2              I                                                            :
1 *---] [------] [-------------*                                                                 *
  :   M127       F 26                                                                            :
  :   5102       5201                                                                            :
  : AEXTRS     AEXTRS     AEXT.M                                                     ALE/R     : ALARM ARM EXTEND/RETRACT
  : H004.6     H004.6     H046.4                                                     H071.1    :  5202 *5203
2 *---]/[---*---] [------] [---*------------------------------------------------------( )-----*
  :   X026 I     X026       Y034   I                                                  M137      :
  :    213 I      213       4104   I                                                  #1876     :
  : ARETRS   I ARETRS     AEXT.M    I                                                            :
  : H004.7 I   H004.7     H046.4    I                                                            :
2 *---]/[---*---] [------]/[---*                                                                 *
  :   X027       X027       Y034                                                                  :
  :    214       214        4104                                                                  :
  : HYD.M      ALE/R                                                                 +-------+ : ALARM ARM EXT/RET TIMER
  : H044.4     H071.1                                                                I  T 13 I :  5203  5204  5205  5206
3 *---] [------]/[------------------------------------------------------------------I  K  50I-*  5207
  :   Y024       M137                                                                I H0A1.5I :
  :   2302       5202                                                                +-------+ :
  : AEXTRS     AEXT.M     ALE/RT                                                     AL61      : T-MEAS STAND OUT RS ON ML
  : H004.6     H046.4     H0B1.5                                                     H0C7.5    :  *4105  5204  6401
4 *---] [------]/[------] [---*------------------------------------------------------( )-----*
  :   X026       Y034       T 13   I                                                  F 61      :
  :    213       4104       5203   I                                                  #1887     :
  : *ALRST     AL61                I                                                            :
  : H06F.7     H0C7.5              I                                                            :
4 *---] [------] [-------------*                                                                 *
  :   M127       F 61                                                                            :
  :   5102       5204                                                                            :
  : AEXTRS     AEXT.M     ALE/RT                                                     AL62      : T-MEAS STANDOUT RS OFF ML
  : H004.6     H046.4     H0B1.5                                                     H0C7.6    :  5205  6401
5 *---]/[------] [------] [---*------------------------------------------------------( )-----*
  :   X026       Y034       T 13   I                                                  F 62      :
  :    213       4104       5203   I                                                  #1894     :
  : *ALRST     AL62                I                                                            :
  : H06F.7     H0C7.6              I                                                            :
5 *---] [------] [-------------*                                                                 *
  :   M127       F 62                                                                            :
  :   5102       5205                                                                            :
  : ARETRS     AEXT.M     ALE/RT                                                     AL63      : T-MEAS STAND IN RS ON MAL
  : H004.7     H046.4     H0B1.5                                                     H0C7.7    :  5206  6401
6 *---] [------] [------] [---*------------------------------------------------------( )-----*
  :   X027       Y034       T 13   I                                                  F 63      :
  :    214       4104       5203   I                                                  #1901     :
  : *ALRST     AL63                I                                                            :
  : H06F.7     H0C7.7              I                                                            :
6 *---] [------] [-------------*                                                                 *
  :   M127       F 63                                                                            :
  :   5102       5206                                                                            :
  : ARETRS     AEXT.M     ALE/RT                                                     AL64      : T-MEAS STAND IN RS OFF MALF
  : H004.7     H046.4     H0B1.5                                                     H0C8.0    :  5207  6401
7 *---]/[------]/[------] [---*------------------------------------------------------( )-----*
  :   X027       Y034       T 13   I                                                  F 64      :
  :    214       4104       5203   I                                                  #1908     :
  : *ALRST     AL64                I                                                            :
  : H06F.7     H0C8.0              I                                                            :
7 *---] [------] [-------------*                                                                 *
  :   M127       F 64                                                                            :
  :   5102       5207                                                                            :
  : TUCPRS     TUC.M      ALTC/UT                                                    AL27      : TOOL UNCLAMP PROX ON MALF.
  : H003.1     H044.5     H0B1.4                                                     H0C3.3    :  5208  6301
8 *---] [------]/[------] [---*------------------------------------------------------( )-----*
  :   X019       Y025       T 12   I                                                  F 27      :
  :    206       3412       5109   I                                                  #1915     :
  : *ALRST     AL27                I                                                            :
  : H06F.7     H0C3.3              I                                                            :
8 *---] [------] [-------------*                                                                 *
  :   M127       F 27                                                                            :
  :   5102       5208                                                                            :
  : TUCPRS     TUC.M      ALTC/UT                                                    AL28      : TOOL UNCLAMP PROX OFF MALF.
  : H003.1     H044.5     H0B1.4                                                     H0C3.4    :  5209  6301
9 *---]/[------] [------] [---*------------------------------------------------------( )-----*
  :   X019       Y025       T 12   I                                                  F 28      :
  :    206       3412       5109   I                                                  #1922     :
  : *ALRST     AL28                I                                                            :
  : H06F.7     H0C3.4              I                                                            :
9 *---] [------] [-------------*                                                                 *
  :   M127       F 28                                                                            :
  :   5102       5209                                                                            :
  : M44T.M     INHRLS     NCROTS     HYD.M                                           +-------+ : UNCLAMP DELAY TIMER
  : H046.1     H005.7     H094.4     H044.4                                          I  T 42 I :  5210  5301
10 *---] [------]/[------] [------] [------------------------------------------------I  K 100I-*
  :   Y031       X02F       M420       Y024                                            I H0A5.2I :
  :   3605       219        2908       2302                                            +-------+ :
  : M44T.M     INHRLS     NCROTS     HYD.M                                           +-------+ : CLAMP DELAY TIMER
  : H046.1     H005.7     H094.4     H044.4                                          I  T 43 I :  5211  5302
11 *---]/[------] [------] [------] [------------------------------------------------I  K 100I-*
  :   Y031       X02F       M420       Y024                                            I H0A5.3I :
  :   3605       219        2908       2302                                            +-------+ :
```

REV.	DATE.	NAME.	

DRN. BY. K.MIURA	TITLE.	CONTROL.
DATE. 1.31.1986	VQC15/40	MAZATROL CAM M-2
CHK'D BY. T.HIRATA	YM2B453G	DRAWING NO.
DATE. 1.31.1986		4241681801G
APPR'D BY. M.MURASE	SEQUENCE DIAGRAM	
DATE. 1.31.1986		SHEET. 52 OF. 103

YAMAZAKI MAZAK CORPORATION

```
  : UCLDT      M44T.M      INHRLS                                          AL37      : INDEX UNCLAMP PRS ON ALM
  :  H0B5.2     H046.1      H005.7                                          H0C4.5    :  5301  6402
1 *---] [--------] [--------]/[-*-------------------------------------------( )---*
  :   T 42       Y031        X02F  I                                         F 37    :
  :   5210       3605         219  I                                        #1941    :
  : *ALRST     AL37                I                                                 :
  :  H06F.7     H0C4.5             I                                                 :
1 *---] [--------] [----------*                                                      *
  :   M127       F 37                                                               :
  :   5102       5301                                                               :
  : CLDT       M44T.M      INHRLS                                          AL38      : INDEX UNCLAMP PRS OFF AL
  :  H0B5.3     H046.1      H005.7                                          H0C4.6    :  5302  6402
2 *---] [--------]/[--------] [-*-------------------------------------------( )---*
  :   T 43       Y031        X02F  I                                         F 38    :
  :   5211       3605         219  I                                        #1948    :
  : *ALRST     AL38                I                                                 :
  :  H06F.7     H0C4.6             I                                                 :
2 *---] [--------] [----------*                                                      *
  :   M127       F 38                                                               :
  :   5102       5302                                                               :
  : HYD.M      PCLL        PUCL        2PCS                                 +-------+ :
  :  H044.4     H09B.2      H09B.5      H093.0                               I T 54 I :  5303  5304  5305  5306
3 *---] [--------]/[--------]/[--------] [-*-------------------------------I K   60I-*  5307
  :   Y024       M474        M477        M408                                 I H0A6.6I :
  :   2302       9207        9208        3805                                 +-------+ :
  : PCLPRS     PUC                                                           AL39      : PALLET CLAMP PROX ON MALF.
  :  H002.6     H040.1      H0B6.6                                          H0C4.7    :  5304  6501
4 *---] [--------] [--------] [-*-------------------------------------------( )---*
  :   X016       Y001         T 54  I                                         F 39    :
  :    203       9901        5303  I                                        #1961    :
  : *ALRST     AL39                I                                                 :
  :  H06F.7     H0C4.7             I                                                 :
4 *---] [--------] [----------*                                                      *
  :   M127       F 39                                                               :
  :   5102       5304                                                               :
  : PCLPRS     PCL                                                           AL40      : PALLET CLAMP PROX OFF MALF.
  :  H002.6     H040.0      H0B6.6                                          H0C5.0    :  5305  6501
5 *---]/[--------] [--------] [-*-------------------------------------------( )---*
  :   X016       Y000         T 54  I                                         F 40    :
  :    203       9802        5303  I                                        #1968    :
  : *ALRST     AL40                I                                                 :
  :  H06F.7     H0C5.0             I                                                 :
5 *---] [--------] [----------*                                                      *
  :   M127       F 40                                                               :
  :   5102       5305                                                               :
  : PUCPRS     PCL                                                           AL41      : PALLET UNCLAMP PROX ON ML
  :  H002.7     H040.0      H0B6.6                                          H0C5.1    :  5306  6501
6 *---] [--------] [--------] [-*-------------------------------------------( )---*
  :   X017       Y000         T 54  I                                         F 41    :
  :    204       9802        5303  I                                        #1975    :
  : *ALRST     AL41                I                                                 :
  :  H06F.7     H0C5.1             I                                                 :
6 *---] [--------] [----------*                                                      *
  :   M127       F 41                                                               :
  :   5102       5306                                                               :
  : PUCPRS     PUC                                                           AL42      : PALLET UNCLAMP PROX OFF M
  :  H002.7     H040.1      H0B6.6                                          H0C5.2    :  5307  6501
7 *---]/[--------] [--------] [-*-------------------------------------------( )---*
  :   X017       Y001         T 54  I                                         F 42    :
  :    204       9901        5303  I                                        #1982    :
  : *ALRST     AL42                I                                                 :
  :  H06F.7     H0C5.2             I                                                 :
7 *---] [--------] [----------*                                                      *
  :   M127       F 42                                                               :
  :   5102       5307                                                               :
  : SZS.M      SZSK        SMR         AUT.M                                ALSRX     : ALARM SPINDLE RUN AUX
  :  H000.1     H070.5      H069.6      H047.0                               H071.4    :  5308  5309
8 *---] [--------]/[--------] [--------] [-*-------------------------------------( )---*
  :   X001       M133         M 78       Y038                                 M140    :
  :    102       5312        2701        2114                                #1987    :
  : ALSRX                                                                   +-------+ : ALARM SPINDLE RUN AUX TIMER
  :  H071.4                                                                 I T 15 I :  5309  5310
9 *---] [-----------------------------------------------------------------I K    5I-*
  :   M140                                                                  I H0A1.7I :
  :   5308                                                                  +-------+ :
  : *ALRST     AL43                                                          AL43      : SPINDLE R.P.M MALF.
  :  H06F.7     H0C5.3                                                      H0C5.3    :  5310  6205  6302
10 *---] [--------] [-*-----------------------------------------------------( )---*
  :   M127       F 43  I                                                     F 43    :
  :   5102       5310  I                                                    #1994    :
  : ALSRXT             I                                                             :
  :  H0B1.7            I                                                             :
10 *---] [----------*                                                                *
  :   T 15                                                                           :
  :   5309                                                                           :
  : SST        SF          SOME2       UOME2                                SZS       : SPINDLE ZERO SPEED
  :  H069.2     H079.3      H06B.2      H06B.3                               H070.4    :  5311 *5312  5401
11 *---]/[--------]/[--------]/[--------]/[-------------------------------------( )---*
  :   M 74       M203        M 90        M 91                                 M132    :
  :   2604       2103        2805        2809                                #1999    :
  : SZSXT      SZSK                                                          SZSK      : SPINDLE ZERO SPEED AUX
  :  H0B2.0     H070.5                                                      H070.5    :  *5308  5312  5401
12 *---]/[--------] [-*-----------------------------------------------------( )---*
  :   T 16       M133  I                                                     M133    :
  :   5401       5312  I                                                    #2003    :
  : SZS                I                                                             :
  :  H070.4            I                                                             :
12 *---]/[----------*                                                                *
  :   M132                                                                           :
  :   5311                                                                           :
```

DRN. BY. K.MIURA	TITLE.	CONTROL.
DATE. 1.31.1986	VQC15/40	MAZATROL CAM M-2
CHK'D BY. T.HIRATA	YM2B453G	DRAWING NO.
DATE. 1.31.1986		4241681801G
APPR'D BY. M.MURASE	SEQUENCE DIAGRAM	
DATE. 1.31.1986		SHEET. 53 OF. 103

REV.	DATE.	NAME.

YAMAZAKI MAZAK CORPORATION

```
  : SZSK        SZS                                                          +-------+ : SPDL ZERO SPEED AUX TIMER
  :  H070.5     H070.4                                                       I  T 16 I : *5312  5401
1 +---] [-------] [-----------------------------------------------------------I K   30I-+
  :   M133       M132                                                        I H0A2.0I :
  :   5312       5311                                                        +-------+ :
  : HYD.M       ORCM1.M                                                      +-------+ : SPINDLE ORIENT TIMER 1
  :  H044.4     H044.3                                                       I  T 17 I :  5402  5405
2 +---] [-------]/[-----------------------------------------------------------I K   10I-+
  :   Y024       Y023                                                        I H0A2.1I :
  :   2302       2806                                                        +-------+ :
  : ORCM1.M                                                                  +-------+ : SPINDLE ORIENT TIMER 2
  :  H044.3                                                                  I  T 18 I :  5403  5406
3 +---] [-----------------------------------------------------------------------I K  100I-+
  :   Y023                                                                   I H0A2.2I :
  :   2806                                                                   +-------+ :
  : SOSA                                                                     SLCK.L    : SPINDLE LOCK LAMP
  :  H06B.4                                                                   H11A.4  :  5404 *6001
4 +---] [-----------------------------------------------------------------------( )---+
  :   M 92                                                                     Y1D4   :
  :   5408                                                                    #2016   :
  : SOSA        ORCT1                                                        AL44     : ORIENT MALF 1
  :  H06B.4     H0B2.1                                                        H0C5.4  :  5405  6302
5 +---] [-------] [---+-------------------------------------------------------( )---+
  :   M 92       T 17  I                                                       F 44   :
  :   5408       5402  I                                                      #2022   :
  : *ALRST      AL44   I                                                              :
  :  H06F.7     H0C5.4 I                                                              :
5 +---] [-------] [---+                                                              +
  :   M127       F 44                                                                 :
  :   5102       5405                                                                 :
  : ORCT2       SOSA                                                         AL45     : ORIENT MALF 2
  :  H0B2.2     H06B.4                                                        H0C5.5  : *2806  5406  6302
6 +---] [-------]/[---+-------------------------------------------------------( )---+
  :   T 18       M 92  I                                                       F 45   :
  :   5403       5408  I                                                      #2028   :
  : *ALRST      AL45   I                                                              :
  :  H06F.7     H0C5.5 I                                                              :
6 +---] [-------] [---+                                                              +
  :   M127       F 45                                                                 :
  :   5102       5406                                                                 :
  : SZS.M       SOSA                                                         AL46     : ORIENT MALF 3
  :  H000.1     H06B.4                                                        H0C5.6  : *2304 *2606 *2806  5407
7 +---]/[-------] [---+-------------------------------------------------------( )---+  6205  6302
  :   X001       M 92  I                                                       F 46   :
  :    102       5408  I                                                      #2034   :
  : *ALRST      AL46   I                                                              :
  :  H06F.7     H0C5.6 I                                                              :
7 +---] [-------] [---+                                                              +
  :   M127       F 46                                                                 :
  :   5102       5407                                                                 :
  : ORCM1.M     SOSA                                                         SOSA     : SPINDLE ORIENT SAFETY
  :  H044.3     H06B.4                                                        H06B.4  : *2805  2809  3411  5404
8 +---] [-------] [---+-------------------------------------------------------( )---+  5405 *5406  5407  5408
  :   Y023       M 92  I                                                       M 92   :  5901 *5907  7106
  :   2806       5408  I                                                      #2038   :
  : ORA1                I                                                              :
  :  H000.3             I                                                              :
8 +---] [-------------+                                                              +
  :   X003                                                                             :
  :    104                                                                             :
  : SA.M                                                                     +-------+ : SERVO OFF TIMER
  :  H046.7                                                                  I  T 34 I :  5409  5410
9 +---] [-----------------------------------------------------------------------I K 9000I-+
  :   Y037                                                                   I H0A4.2I :
  :   2305                                                                   +-------+ :
  : WLAL.M      SAT          ALWLB       HYD.M                               +-------+ : ALARM HEAD LUBE PRS. TIMER
  :  H00F.2     H0B4.2       H071.6      H044.4                              I  T 20 I :  5410  5501  5502
10 +---] [-------] [-------]/[---+-------] [-----------------------------------I K  600I-+
  :   X07A       T 34         M142  I     Y024                               I H0A2.4I :
  :    418       5409         5502  I     2302                               +-------+ :
  : HLP.M       ALHLP                I                                                 :
  :  H00F.1     H071.5               I                                                 :
10 +---] [---+---]/[-------------------+                                              +
  :   X079  I   M141                                                                   :
  :    417  I   5501                                                                   :
  : HLP2.M  I                                                                          :
  :  H008.2 I                                                                          :
10 +---] [---+                                                                         +
  :   X042                                                                             :
  :    316                                                                             :
```

	DRN. BY. K.MIURA	TITLE.	CONTROL.
	DATE. 1.31.1986	VQC15/40	MAZATROL CAM M-2
	CHK'D BY. T.HIRATA	YM2B453G	DRAWING NO.
	DATE. 1.31.1986		42416818016
	APPR'D BY. M.MURASE	SEQUENCE DIAGRAM	
	DATE. 1.31.1986		SHEET. 54 OF. 103
REV. DATE. NAME.			

YAMAZAKI MAZAK CORPORATION

```
  : *ALRST      ALHLP                                                          ALHLP     : ALARM HEAD LUBE
  :  H06F.7     H071.5                                                          H071.5   :  2301 *5410  5501  5506
1 *---] [-----*-----] [-----*-------------------------------------------------( )-----*  :  5509
  :   M127   I   M141   I                                                        M141    :
  :   5102   I   5501   I                                                       #2060    :
  : HLP.M    I          I
  :  H00F.1  I          I
1 *---] [-----*          *
  :   X079   I          I
  :    417   I          I
  : HLP2.M   I          I
  :  H008.2  I          I
1 *---] [-----*          *
  :   X042               I
  :    316               I
  : HLP.M       LPT      I
  :  H00F.1      H0B2.4  I
1 *---] [-----*-----] [-----*
  :   X079   I   T 20
  :    417   I   5410
  : HLP2.M   I
  :  H008.2  I
1 *---] [-----*
  :   X042
  :    316
  : *ALRST      ALWLB                                                          ALWLB     : ALARM WAY LUBE
  :  H06F.7     H071.6                                                          H071.6   :  2301 *5410  5502  5505
2 *---] [-----*-----] [-----*-------------------------------------------------( )-----*
  :   M127   I   M142   I                                                        M142    :
  :   5102   I   5502   I                                                       #2067    :
  : WLAL.M   I          I
  :  H00F.2  I          I
2 *---] [-----*          *
  :   X07A               I
  :    418               I
  : LPT         WLAL.M   I
  :  H0B2.4      H00F.2  I
2 *---] [-----*-----] [-----*
  :   T 20       X07A
  :   5410        418
  : HYD.M                                                                       *-------*  : ZY1 POINT OVER SMZY TIMER
  :  H044.4                                                                     I T 57 I  :  5503  5504
3 *---] [-----------------------------------------------------------------------I K  20I-*
  :   Y024                                                                      I H0A7.1I  :
  :   2302                                                                      *-------*  :
  : FA          HYD.M       ZY10VT                                              AL51      : SP. MOTOR CONTROLLER MALF.
  :  H000.2     H044.4       H0B7.1                                              H0C6.3   :  2301  5504  6303
4 *---]/[-----*-----] [-----*-----] [-----*-------------------------------------( )-----*
  :   X002       Y024        T 57   I                                            F 51    :
  :    103       2302        5503   I                                           #2077    :
  : *ALRST      AL51                I
  :  H06F.7     H0C6.3              I
4 *---] [-----*-----] [-----------*
  :   M127       F 51
  :   5102       5504
  : *ALRST      AL54                                                            AL54      : LUBRICATION MALF.
  :  H06F.7     H0C6.6                                                          H0C6.6   :  5505  6303
5 *---] [-----*-----] [-----*-------------------------------------------------( )-----*
  :   M127       F 54   I                                                        F 54    :
  :   5102       5505   I                                                       #2081    :
  : ALWLB               I
  :  H071.6             I
5 *---] [-----------------*
  :   M142
  :   5502
  : STL.N       ALHLP       SBK.N                                               ALSSP2    : ALARM SPINDLE STOP 2
  :  H132.1     H071.5       H108.0                                              H072.1   :  *2606  5506
6 *---]/[-----*-----] [-----*-----] [-----*-------------------------------------( )-----*
  :   X111   I   M141   I    Y140   I                                            M145    :
  :    507   I   5501   I    2206   I                                           #2090    :
  : ALSSP2   I AL57     I AUT.M     I
  :  H072.1  I  H0C7.1  I  H047.0   I
6 *---] [-----*-----] [-----*-----]/[-----*
  :   M145       F 57        Y038
  :   5506       5601        2114
  : *ALRST      AL53                                                            AL53      : MOTOR THERMAL TRIP ALRM
  :  H06F.7     H0C6.5                                                          H0C6.5   :  5507  5702  6205  6303
7 *---] [-----*-----] [-----*-------------------------------------------------( )-----*
  :   M127       F 53   I                                                        F 53    :
  :   5102       5507   I                                                       #2094    :
  : THR.M               I
  :  H00E.3             I
7 *---] [-----------------*
  :   X073
  :    415
  : MDINT.M     ITMDSS.M    AUT.M                                               AL55      : MACHINE DOOR INTERLOCK ML
  :  H003.4      H003.5      H047.0                                              H0C6.7   :  2203 *2607 *2608  5508
8 *---]/[-----*-----]/[-----*-----] [-----*-------------------------------------( )-----*  :  6205  6303
  :   X01C       X01D        Y038                                                F 55    :
  :    209        210        2114                                               #2098    :
  : *ALRST      AL56                                                            AL56      : HEAD LUBRICATION ALARM
  :  H06F.7     H0C7.0                                                          H0C7.0   :  5509  6402
9 *---] [-----*-----] [-----*-------------------------------------------------( )-----*
  :   M127       F 56   I                                                        F 56    :
  :   5102       5509   I                                                       #2102    :
  : ALHLP               I
  :  H071.5             I
9 *---] [-----------------*
  :   M141
  :   5501
```

DRN. BY. K.MIURA	TITLE.	CONTROL.
DATE. 1.31.1986	VOC15/40	MAZATROL CAM M-2
CHK'D BY. T.HIRATA	YM2B453G	DRAWING NO.
DATE. 1.31.1986		42416818016
APPR'D BY. M.MURASE	SEQUENCE DIAGRAM	
DATE. 1.31.1986		SHEET. 55 OF. 103

REV.	DATE.	NAME.

YAMAZAKI MAZAK CORPORATION

```
  : AL57        *ALRST                                                                  AL57      : MAIN TRANSFORMER OVERHEAT
  :  H0C7.1      H06F.7                                                                  H0C7.1   :   2301  4302  4303  4304
1 *---] [--------] [---*-------------------------------------------------------------( )---*   4401  5506  5601  6303
  :   F 57        M127  I                                                                F 57     : *8109
  :   5601        5102  I                                                               #2108     :
  : OHT.M       THR.M   I                                                                         :
  :  H00F.3      H00E.3 I                                                                         :
1 *---] [--------]/[---*                                                                          *
  :   X07B        X073                                                                            :
  :    419         415                                                                            :
  : EXAL.M      ADDIS                                                                   AL60      : EXTERNAL CONTROL ALARM
  :  H006.6      H095.4                                                                  H0C7.4   :   5602  6302
2 *---] [--------] [-----------------------------------------------------------------( )---*
  :   X036        M428                                                                   F 60     :
  :    306        2201                                                                  #2111     :
  : SKIP1.M     SEN-RDY     TOUCH.N     TF          AHS                                 +-------+ : MMS ALARM TIMER
  :  H007.7      H00C.2      H13B.1     H079.4      H096.5                              I  T 44 I :   5603  5701
3 *---]/[---*---]/[---*---] [--------]/[--------]/[-----------------------------------I K   50I-*
  :   X03F  I     X062  I     X159        M204        M437                              I H0A5.4I :
  :    313  I      410  I      607        2104        3905                              +-------+ :
  : MMSONX  I           I                                                                         :
  :  H06D.0 I           I                                                                         :
3 *---]/[---*           *                                                                         *
  :   M104              I                                                                         :
  :   3911              I                                                                         :
  : MMS-PON             I                                                                         :
  :  H00C.0             I                                                                         :
3 *---]/[---*-----------*                                                                         *
  :   X060  I                                                                                     :
  :    408  I                                                                                     :
  : MMS-ST  I                                                                                     :
  :  H00C.3 I                                                                                     :
3 *---]/[---*                                                                                     *
  :   X063                                                                                        :
  :    411                                                                                        :
  : ST.L        MMSS                                                                    +-------+ :
  :  H119.0      H095.1                                                                 I  T 67 I :   5604  5701
4 *---] [--------] [-----------------------------------------------------------------I K    5I-*
  :   Y1C8  I     M425                                                                   I H0A8.3I :
  :   8802  I     2203                                                                   +-------+ :
  : SP.L    I                                                                                       :
  :  H119.1 I                                                                                       :
4 *---] [---*                                                                                       *
  :   Y1C9                                                                                        :
  :   8803                                                                                        :
  : MMS-RDY     SEN-RDY     TOUCH.N     TF                                              +-------+ :
  :  H00C.1      H00C.2      H13B.1     H079.4                                          I  T 68 I :   5605  5701
5 *---] [--------] [---*---] [--------]/[-----------------------------------------------I K   20I-*
  :   X061        X062  I     X159        M204                                          I H0A8.4I :
  :    409         410  I      607        2104                                          +-------+ :
  : MMS-RDY     SEN-RDY I                                                                         :
  :  H00C.1      H00C.2 I                                                                         :
5 *---]/[--------]/[---*                                                                          *
  :   X061        X062                                                                            :
  :    409         410                                                                            :
  : TOUCH.N     M57         MMSS                                                    M57       : M57 CODE
  :  H13B.1      H089.0      H095.1                                                  H089.0   :   5606 *5701
6 *---] [--------] [---*---] [-----------------------------------------------------------( )---*
  :   X159  I     M328  I     M425                                                    M328     :
  :    607  I     5606  I     2203                                                   #2141     :
  : MMS-ST  I           I                                                                         :
  :  H00C.3 I           I                                                                         :
6 *---] [---*           *                                                                         *
  :   X063              I                                                                         :
  :    411              I                                                                         :
  : MMSCMD.M            I                                                                         :
  :  H046.6             I                                                                         :
6 *---] [-------------*                                                                           *
  :   Y036                                                                                        :
  :   3910                                                                                        :
```

				DRN. BY. K.MIURA	TITLE.	CONTROL.
				DATE. 1.31.1986	VQC15/40	MAZATROL CAM M-2
				CHK'D BY. T.HIRATA	YM2B453G	DRAWING NO.
				DATE. 1.31.1986		42416818016
				APPR'D BY. M.MURASE	SEQUENCE DIAGRAM	
				DATE. 1.31.1986		SHEET. 56 OF. 103
REV.	DATE.	NAME.		YAMAZAKI MAZAK CORPORATION		

```
  : MMS-ST                TOUCH.N    TF        MMSS                                                    AL65     : MMS MALF
  :  H00C.3     H0B8.2    H13B.1    H079.4    H095.1                                                   H0C8.1   :  2203  5701  6205  6303
1 +---]/[-------] [---+---] [---+---]/[---+---] [---+-------------------------------------------------------( )---+
  :   X063        T 66  I    X159  I   M204  I   M425  I                                                  F 65   :
  :    411        3909  I     607  I   2104  I   2203  I                                                 #2163   :
  : MMS-PON             I          I         I         I                                                         :
  :  H00C.0             I          I         I         I                                                         :
1 +---]/[---+-----------+          +         +         +                                                         +
  :   X060  I                      I         I         I                                                         :
  :    408  I                      I         I         I                                                         :
  :         I                      I         I         I                                                         :
  :  H0B8.4 I                      I         I         I                                                         :
1 +---] [---+                      +         +         +                                                         +
  :   T 68                         I         I         I                                                         :
  :   5605                         I         I         I                                                         :
  : MMS-ST      M57                I         I         I                                                         :
  :  H00C.3     H089.0             I         I         I                                                         :
1 +---] [-------]/[-----------------+         +         +                                                         +
  :   X063        M328                        I         I                                                         :
  :    411        5606                        I         I                                                         :
  : CSTBX       *ALRST    AL65       *RST     I         I                                                         :
  :  H076.3     H06F.7    H0C8.1     H060.0   I         I                                                         :
1 +---]/[-------] [---+---] [-------] [---+   +         +                                                         +
  :   M179        M127  I   F 65       M  0              I                                                         :
  :   2201        5102  I   5701       2113              I                                                         :
  :                     I                                 I                                                         :
  :  H0B8.3             I                                 I                                                         :
1 +---] [-----------+                                     +                                                         +
  :   T 67                                                I                                                         :
  :   5604                                                I                                                         :
  : *ALRST      AL65      MMSS                            I                                                         :
  :  H06F.7     H0C8.1    H095.1                          I                                                         :
1 +---] [-------] [---+---]/[-----------------------------+                                                         +
  :   M127        F 65  I   M425                                                                                    :
  :   5102        5701  I   2203                                                                                    :
  : MMSALT              I                                                                                           :
  :  H0B5.4             I                                                                                           :
1 +---] [-----------+                                                                                               +
  :   T 44                                                                                                          :
  :   5603                                                                                                          :
  : AL1                                                                                          ALSSP    : ALARM SPINDLE STOP
  :  H0C0.1                                                                                       H072.0   :  5702  5703  6205
2 +---] [---+-------------------------------------------------------------------------------------( )---+
  :   F  1  I                                                                                      M144   :
  :   5105  I                                                                                     #2167   :
  : FA      I                                                                                              :
  :  H000.2 I                                                                                              :
2 +---]/[---+                                                                                              +
  :   X002  I                                                                                              :
  :    103  I                                                                                              :
  : AL53    I                                                                                              :
  :  H0C6.5 I                                                                                              :
2 +---] [---+                                                                                              +
  :   F 53                                                                                                 :
  :   5507                                                                                                 :
  : ALSSP                                                                                    +-------+     : ALARM SPINDLE STOP TIMER
  :  H072.0                                                                                  I  T 21 I     :  *2606  5703
3 +---] [-------------------------------------------------------------------------------------I K  600I-+
  :   M144                                                                                   I H0A2.5I     :
  :   5702                                                                                   +-------+     :
  : PDO         PDOL                                                                         +-------+     :
  :  H040.5     H091.4                                                                       I  T 88 I     :  5704  5705
4 +---] [-------]/[---+-------------------------------------------------------------------------I K  60I-+
  :   Y005        M396  I                                                                    I H0AB.0I     :
  :  10002        9205  I                                                                    +-------+     :
  : PDC         PDCL    I                                                                                    :
  :  H040.6     H091.5  I                                                                                    :
4 +---] [-------]/[---+                                                                                      +
  :   Y006        M397                                                                                       :
  :  10004        9206                                                                                       :
  :                           2PCS                                                           AL69     : PALLET DOOR ALARM
  :  H0BB.0                   H093.0                                                         H0C8.5   :  5705  6501
5 +---] [---+-----------+---] [-------------------------------------------------------------( )---+
  :   T 88  I           I   M408                                                             F 69   :
  :   5704  I           I   3805                                                            #2184   :
  : PDCMOP  I           I                                                                            :
  :  H091.6 I           I                                                                            :
5 +---] [---+           +                                                                            +
  :   M398              I                                                                            :
  :   9905              I                                                                            :
  : AL69        *ALRST  I                                                                            :
  :  H0C8.5     H06F.7  I                                                                            :
5 +---] [-------] [---+                                                                              +
  :   F 69        M127                                                                               :
  :   5705        5102                                                                               :
```

				DRN. BY. K.MIURA	TITLE.	CONTROL.
				DATE. 1.31.1986	V9C15/40	MAZATROL CAM M-2
				CHK'D BY. T.HIRATA	YM2B453G	DRAWING NO.
				DATE. 1.31.1986		4241681801G
				APPR'D BY. M.MURASE	SEQUENCE DIAGRAM	
				DATE. 1.31.1986		SHEET. 57 OF. 103
REV.	DATE.	NAME.		YAMAZAKI MAZAK CORPORATION		

```
  : PLDAL                 2PCS                                                    AL70      : PALLET CHANGE ALARM
  :  H0BF.0               H093.0                                                   H0C8.6   :  5801  6501
1 +---] [---+-----------+---] [-------------------------------------------------------( )---+
  :   T120  I           I   M408                                                    F 70    :
  :  10106  I           I   3805                                                    #2195   :
  : PULAL   I           I                                                                   :
  :  H0BF.1 I           I                                                                   :
1 +---] [---+           +                                                                   +
  :   T121  I           I                                                                   :
  :  10107  I           I                                                                   :
  : P1SAL   I           I                                                                   :
  :  H0BF.2 I           I                                                                   :
1 +---] [---+           +                                                                   +
  :   T122  I           I                                                                   :
  :  10108  I           I                                                                   :
  : P2SAL   I           I                                                                   :
  :  H0BF.3 I           I                                                                   :
1 +---] [---+           +                                                                   +
  :   T123  I           I                                                                   :
  :  10109  I           I                                                                   :
  : PLKAL   I           I                                                                   :
  :  H0BF.4 I           I                                                                   :
1 +---] [---+           +                                                                   +
  :   T124  I           I                                                                   :
  :  10110  I           I                                                                   :
  : PULKAL  I           I                                                                   :
  :  H0BF.5 I           I                                                                   :
1 +---] [---+           +                                                                   +
  :   T125              I                                                                   :
  :  10201              I                                                                   :
  : AL70        *ALRST  I                                                                   :
  :  H0C8.6     H06F.7  I                                                                   :
1 +---] [-------] [---+                                                                     +
  :   F 70      M127                                                                        :
  :   5801      5102                                                                        :
  : MGCORS      MGCORS      MGC.M                                                   ALMGC/O  : ALARM MAG. COVER CLOSE/OPEN
  :  H00A.2     H00A.2      H044.6                                                   H072.2  :  5802 *5803
2 +---]/[---+---] [-------]/[---+-------------------------------------------------------( )---+
  :   X052  I   X052        Y026  I                                                    M146    :
  :    403  I    403        2906  I                                                    #2204   :
  : MGCCRS  I MGCCRS        MGC.M I                                                            :
  :  H00A.3 I  H00A.3       H044.6 I                                                           :
2 +---]/[---+---] [-------] [---+                                                             +
  :   X053      X053        Y026                                                                :
  :    404      404         2906                                                                :
  : HYD.M       ALMGC/O                                                                 +-------+ : ALARM MAG COVER OP/CL TIMER
  :  H044.4     H072.2                                                                  I  T 30 I :  5803  5804  5805  5806
3 +---] [-------]/[-------------------------------------------------------------------I K   50I-+  5808
  :   Y024      M146                                                                    I H0A3.6I :
  :   2302      5802                                                                    +-------+ :
  : MGCCRS      MGC.M       ALMGC/OT                                                 AL71      : MAG. COVER CLOSE RS ON MALF.
  :  H00A.3     H044.6      H0B3.6                                                   H0C8.7   :  5804  6401 *7103
4 +---] [-------]/[-------] [---+-------------------------------------------------------( )---+
  :   X053      Y026        T 30  I                                                    F 71    :
  :    404      2906        5803  I                                                    #2215   :
  : *ALRST      AL71                I                                                          :
  :  H06F.7     H0C8.7              I                                                          :
4 +---] [-------] [-------------+                                                             +
  :   M127      F 71                                                                        :
  :   5102      5804                                                                        :
  : MGCCRS      MGC.M       ALMGC/OT                                                 AL72      : MAG. COVER CLOSE RS OFF MALF.
  :  H00A.3     H044.6      H0B3.6                                                   H0C9.0   :  5805  6401
5 +---]/[-------] [-------] [---+-------------------------------------------------------( )---+
  :   X053      Y026        T 30  I                                                    F 72    :
  :    404      2906        5803  I                                                    #2222   :
  : *ALRST      AL72                I                                                          :
  :  H06F.7     H0C9.0              I                                                          :
5 +---] [-------] [-------------+                                                             +
  :   M127      F 72                                                                        :
  :   5102      5805                                                                        :
  : MGCCRS      MGC.M       ALMGC/OT                                                 MGCOONF  : MAGAZINE COVER OPEN ON FAULTY
  :  H00A.2     H044.6      H0B3.6                                                   H073.4  :  5806  5807
6 +---] [-------] [-------] [---+-------------------------------------------------------( )---+
  :   X052      Y026        T 30  I                                                    M156    :
  :    403      2906        5803  I                                                    #2229   :
  : *ALRST      MGCOONF             I                                                          :
  :  H06F.7     H073.4              I                                                          :
6 +---] [-------] [-------------+                                                             +
  :   M127      M156                                                                        :
  :   5102      5806                                                                        :
  : MGCOONF                                                                             AL73      : MAG. CVR OPEN RS ON MALF.
  :  H073.4                                                                             H0C9.1   :  5807  6401
7 +---] [-------------------------------------------------------------------------------( )---+
  :   M156                                                                                F 73    :
  :   5806                                                                                #2231   :
  : MGCCRS      MGC.M       ALMGC/OT                                                 AL74      : MAG. CVR OPEN RS OFF MALF
  :  H00A.2     H044.6      H0B3.6                                                   H0C9.2   :  5808  6401 *7103
8 +---]/[-------]/[-------] [---+-------------------------------------------------------( )---+
  :   X052      Y026        T 30  I                                                    F 74    :
  :    403      2906        5803  I                                                    #2238   :
  : *ALRST      AL74                I                                                          :
  :  H06F.7     H0C9.2              I                                                          :
8 +---] [-------] [-------------+                                                             +
  :   M127      F 74                                                                        :
  :   5102      5808                                                                        :
```

REV.	DATE.	NAME.	

DRN. BY. K.MIURA	TITLE.	CONTROL.
DATE. 1.31.1986	V9C15/40	MAZATROL CAM M-2
CHK'D BY. T.HIRATA	YM2B453G	DRAWING NO.
DATE. 1.31.1986		42416818016
APPR'D BY M.MURASE	SEQUENCE DIAGRAM	
DATE. 1.31.1986		SHEET. 58 OF. 103

YAMAZAKI MAZAK CORPORATION

```
  : CYCLE-F     MEMF-1      SPTDPRS     SOSA        ZPY1.N      ZPZ1.N      MEMF-1      TSME                                  AL75      : SPINDLE TOOL DITECTER OFF F.
  : H084.0      H084.1      H00B.3      H06B.4      H130.1      H130.2      H084.1      H064.1                                H0C9.3    :  5901  6402 *7303
1 +---] [-------]/[-------]/[-------] [-------] [-------]/[-------]/[-------+-------------------------------( )-------+
  :   M288        M289        X05B        M 92        X101        X102        M289        M 33    I                         F 75      :
  :   7301        7302        407         5408        501         502         7302        3303    I                         #2250     :
  : *ALRST      AL75                                                                                I                                   :
  :   H06F.7      H0C9.3                                                                            I                                   :
1 +---] [-------] [-----------------------------------------------------------------------------------+                                   *
  :   M127        F 75                                                                                                                  :
  :   5102        5901                                                                                                                  :
  : CYCLE-D     MEMD-1      MGTDPRS     ZPY1.N      ZPZ2.N      TSME        MGCOX                                 AL76      : MAGAZINE TOOL DITECTER OFF F.
  : H081.7      H082.0      H000.5      H130.1      H131.2      H064.1      H074.3                                H0C9.4    :  5902  6402 *7106 *7207
2 +---] [-------]/[-------+-------]/[-------] [-------] [-------]/[-------] [-------+-------------------------------( )-------+
  :   M271        M272    I   X005        X101        X10A        M 33        M163    I                         F 76      :
  :   7104        7105    I   106         501         506         3303        7103    I                         #2264     :
  : CYCLE-E     MEME-1      I                                                           I                                   :
  : H083.0      H083.1      I                                                           I                                   :
2 +---] [-------]/[-------+                                                           +                                   *
  :   M280        M281                                                                  I                                   :
  :   7205        7206                                                                  I                                   :
  : *ALRST      AL76                                                                    I                                   :
  :   H06F.7      H0C9.4                                                                I                                   :
2 +---] [-------] [-----------------------------------------------------------------------+                                   *
  :   M127        F 76                                                                                                                  :
  :   5102        5902                                                                                                                  :
  : *ALRST      AL77                                                                                                  AL77      : TOOL LIFE OVER ALARM
  :   H06F.7      H0C9.5                                                                                              H0C9.5    :  4202  5903  6402
3 +---] [-------] [-------+-----------------------------------------------------------------------------------------( )-------+
  :   M127        F 77    I                                                                                           F 77      :
  :   5102        5903    I                                                                                           #2270     :
  : TLOVR.N     TCME        I                                                                                                     :
  : H141.3      H074.0      I                                                                                                     :
3 +---] [-------] [-------+                                                                                                       *
  :   X18B        M160                                                                                                              :
  :   709         6505                                                                                                              :
  : ALTBR       STL.N       SPL.N                                                                                 AL78      : TOOL BREAK ALARM
  : H07E.1      H132.1      H132.2                                                                                H0C9.6    :  5904  6402 *8109
4 +---] [-------]/[-------]/[-------+-----------------------------------------------------------------------------------------( )-------+
  :   M241        X111        X112    I                                                                                   F 78      :
  :   4201        507         508     I                                                                                   #2275     :
  : ALTBKG                            I                                                                                             :
  : H07E.0                            I                                                                                             :
4 +---] [-----------------------------+                                                                                               *
  :   M240                                                                                                                              :
  :   4107                                                                                                                              :
  : TUCSS                                                                                                           +-------+ : TOOL UNCLAMP FTS. PLS.
  : H003.2                                                                                                          I PLS   I :  5905  5907
5 +---] [-----------------------------------------------------------------------------------------------------------I M366  I-*
  :   X01A                                                                                                          I H08D.6I :
  :   207                                                                                                           +-------+ :
  : SST.B       AUT.M       TUC.M                                                                                 MOP1AX    : TOOL UNCLAMP MISS OP AUX
  : H164.0      H047.0      H044.5                                                                                H072.5    :  5906  5907
6 +---] [-------+-------]/[-------] [-------+-----------------------------------------------------------------------------------------( )-------+
  :   X0E0    I   Y038        Y025    I                                                                                   M149      :
  :   914     I   2114        3412    I                                                                                   #2286     :
  : SJOG.B    I                       I                                                                                             :
  : H164.2    I                       I                                                                                             :
6 +---] [-------+                     +                                                                                             *
  :   X0E2                            I                                                                                             :
  :   916                             I                                                                                             :
  : AUT.M       TUCSS                 I                                                                                             :
  : H047.0      H003.2                I                                                                                             :
6 +---] [-------+-------] [-----------+                                                                                             *
  :   Y038    I   X01A                                                                                                              :
  :   2114    I   207                                                                                                               :
  : SMR       I                                                                                                                     :
  : H069.6    I                                                                                                                     :
6 +---] [-------+                                                                                                                   *
  :   M 78                                                                                                                          :
  :   2701                                                                                                                          :
  : FSPLS       F1.L        SOSA                                                                                  MOP1      : TOOL UNCLAMP MISS OP.
  : H08D.6      H11B.2      H06B.4                                                                                H0CA.0    : *3411  5907  6202
7 +---] [-------]/[-------]/[-------+-----------------------------------------------------------------------------------------( )-------+
  :   M366        Y1DA        M 92    I                                                                                   F 80      :
  :   5905        3406        5408    I                                                                                   #2298     :
  : TUC.M       TCME        AUT.M       I                                                                                             :
  : H044.5      H074.0      H047.0      I                                                                                             :
7 +---] [-------]/[-------]/[-------+                                                                                                 *
  :   Y025        M160        Y038    I                                                                                             :
  :   3412        6505        2114    I                                                                                             :
  : *ALRST      MOP1                    I                                                                                             :
  :   H06F.7      H0CA.0                I                                                                                             :
7 +---] [-------] [-----------------------+                                                                                           *
  :   M127        F 80                    I                                                                                           :
  :   5102        5907                    I                                                                                           :
  : MOP1AX                                I                                                                                           :
  : H072.5                                I                                                                                           :
7 +---] [-----------------------------------+                                                                                           *
  :   M149                                                                                                                          :
  :   5906                                                                                                                          :
```

				DRN. BY. K.MIURA	TITLE.	CONTROL.
				DATE. 1.31.1986	V0C15/40	MAZATROL CAM M-2
				CHK'D BY. T.HIRATA	YM2B453G	DRAWING NO.
				DATE. 1.31.1986		42416818016
				APPR'D BY. M.MURASE	SEQUENCE DIAGRAM	
				DATE. 1.31.1986		SHEET. 59 OF. 103
REV.	DATE.	NAME.		YAMAZAKI MAZAK CORPORATION		

```
  : MU8          MT3          MH0                                                                  MOP6AX   : MISS OPERATION 6 AUX
  :  H062.2      H062.7       H060.5                                                               H07F.7   :  2804 *2804  6001  6002
1 +---] [---+---] [---------] [---+-------------------------------------------------------------( )---+
  :   M 18   I   M 23         M  5  I                                                              M255     :
  :   2420   I   2405         2307  I                                                              #2311    :
  : MU9      I                      I                                                                       :
  :  H062.3  I                      I                                                                       :
1 +---] [---+                      +                                                                       +
  :   M 19                           I                                                                      :
  :   2501                           I                                                                      :
  : SST.B        AUT.M                I                                                                      :
  :  H164.0      H047.0               I                                                                      :
1 +---] [---+---]/[-----------------+                                                                       +
  :   X0E0   I   -Y038                I                                                                      :
  :    914   I    2114                I                                                                      :
  : SJOG.B   I                        I                                                                      :
  :  H164.2  I                        I                                                                      :
1 +---] [---+                        +                                                                       +
  :   X0E2                            I                                                                      :
  :    916                            I                                                                      :
  : TCME         EQTST        SLCK.L  I                                                                      :
  :  H074.0      H07C.6       H11A.4  I                                                                      :
1 +---] [-------]/[---------]/[---+                                                                       +
  :   M160       M230         Y1D4                                                                           :
  :   6505       6606         5404                                                                           :
  : MOP6AX       TOUCH.N                                                                           MOP6     : SPECIAL TOOL MISS OP
  :  H07F.7      H13B.1                                                                            HOCA.5   :  6002  6202
2 +---] [---+---] [---+-----------+-------------------------------------------------------------( )---+
  :   M255   I   X159   I           I                                                              F 85     :
  :   6001   I    607   I           I                                                              #2323    :
  : SFWCD    I DIHT.N   I           I                                                                       :
  :  H069.0  I  H13B.3  I           I                                                                       :
2 +---] [---+---] [---+           +                                                                       +
  :   M 72   I   X15B               I                                                                      :
  :   2506   I    609               I                                                                      :
  : SRVCD    I                      I                                                                      :
  :  H069.1  I                      I                                                                      :
2 +---] [---+                      +                                                                       +
  :   M 73                           I                                                                      :
  :   2507                           I                                                                      :
  : *ALRST       MOP6                 I                                                                      :
  :  H06F.7      HOCA.5               I                                                                      :
2 +---] [-------] [-----------------+                                                                       +
  :   M127       F 85                 I                                                                      :
  :   5102       6002                 I                                                                      :
  : RCTAL1                            I                                                                      :
  :  H06D.2                           I                                                                      :
2 +---] [---+-----------------------+                                                                       +
  :   M106   I                                                                                              :
  :   4803   I                                                                                              :
  : RCTAL2   I                                                                                              :
  :  H06D.6  I                                                                                              :
2 +---] [---+                                                                                               +
  :   M110                                                                                                  :
  :   4802                                                                                                  :
  : PLDMOP       ZPCS                                                                              MOP7     :
  :  H08E.5      H093.0                                                                            HOCA.6   :  6003  6201*10204
3 +---] [---+---] [-----------------------------------------------------------------------------( )---+
  :   M373   I   M408                                                                              F 86     :
  :   9502   I   3805                                                                              #2332    :
  : PULMOP   I                                                                                              :
  :  H08F.1  I                                                                                              :
3 +---] [---+                                                                                               +
  :   M377   I                                                                                              :
  :   9506   I                                                                                              :
  : PDCMOP   I                                                                                              :
  :  H091.6  I                                                                                              :
3 +---] [---+                                                                                               +
  :   M398   I                                                                                              :
  :   9905   I                                                                                              :
  : PCLMOP   I                                                                                              :
  :  H09B.7  I                                                                                              :
3 +---] [---+                                                                                               +
  :   M479   I                                                                                              :
  :   9708   I                                                                                              :
  : PUCMOP   I                                                                                              :
  :  H09C.0  I                                                                                              :
3 +---] [---+                                                                                               +
  :   M480   I                                                                                              :
  :   9804   I                                                                                              :
  : PUCMOP   I                                                                                              :
  :  H09C.0  I                                                                                              :
3 +---] [---+                                                                                               +
  :   M480   I                                                                                              :
  :   9804   I                                                                                              :
  : P1SMOP   I                                                                                              :
  :  H09C.3  I                                                                                              :
3 +---] [---+                                                                                               +
  :   M483                                                                                                  :
  :   9604                                                                                                  :
  : ZPX1.N       ZPY1.N       ZPZ1.N       ZP41.N       *ESP.M                                   REFME    : ALL AXIS REFERENCE MEMORY
  :  H130.0      H130.1       H130.2       H130.3       H000.0                                   H072.6   :  6004 *6102 *9202 *9501
4 +---] [-------] [-------] [-------] [---+---] [-----------------------------------------------( )---+  *9505 *9707  9802 *9803
  :   X100       X101         X102         X103   I     X000                                     M150     :  9901*10001
  :    420        501          502          503   I     101                                      #2339    :
  : REFME                                          I                                                      :
  :  H072.6                                        I                                                      :
4 +---] [-----------------------------------------+                                                      +
  :   M150                                                                                                  :
  :   6004                                                                                                  :
```

				DRN. BY. K.MIURA	TITLE.	CONTROL.
				DATE. 1.31.1986	VQC15/40	MAZATROL CAM M-2
				CHK'D BY. T.HIRATA	YM2B453G	DRAWING NO.
				DATE. 1.31.1986		4241681801G
				APPR'D BY. M.MURASE	SEQUENCE DIAGRAM	
				DATE. 1.31.1986		SHEET. 60 OF. 103
REV.	DATE.	NAME.		YAMAZAKI MAZAK CORPORATION		

```
  : AEXTCD                ZPZ1.N                                                    FACSBK    :
  :  H073.2                H130.2                                                   H072.3    : *5006  6101  6102
1 +---] [---+----------+---]/[-------------------------------------------------------( )---+
  :   M154  I          I   X102                                                      M147      :
  :   4005  I          I    502                                                      #2346     :
  : ENGS    I          I                                                                      :
  :  H06B.0 I          I                                                                      :
1 +---] [---+          +                                                                      +
  :   M 88             I                                                                      :
  :   4002             I                                                                      :
  : FACSBK     *ALRST  I                                                                      :
  :  H072.3    H06F.7  I                                                                      :
1 +---] [-------] [---+                                                                      +
  :   M147     M127                                                                           :
  :   6101     5102                                                                           :
  : REFME      CSTBX                                                                 MOP8     : STL PB MISS OP
  :  H072.6    H076.3                                                                H0CA.7   :  6102  6202
2 +---]/[-------] [---+-------------------------------------------------------------( )---+
  :   M150     M179  I                                                                F 87     :
  :   6004     2201  I                                                                #2353    :
  : REFME      MOP8  I                                                                         :
  :  H072.6    H0CA.7 I                                                                        :
2 +---]/[-------] [---+                                                                      +
  :   M150     F 87  I                                                                         :
  :   6004     6102  I                                                                         :
  : FACSBK           I                                                                         :
  :  H072.3          I                                                                         :
2 +---] [-----------+                                                                          +
  :   M147                                                                                     :
  :   6101                                                                                     :
  : +X.B       +XENV   MZP                                                           MOP9     : + DIRECTION MISS OP
  :  H161.0    H07D.3   H065.1                                                       H0CB.0   :  6103  6202
3 +---] [-------]/[---+---]/[-------------------------------------------------------( )---+
  :   X0C8     M235  I   M 41                                                         F 88     :
  :    812     7604  I   2908                                                        #2366    :
  : +Y.B       +YENV  I                                                                        :
  :  H161.2    H07D.4 I                                                                        :
3 +---] [-------]/[---+                                                                      +
  :   X0CA     M236  I                                                                         :
  :    814     7605  I                                                                         :
  : +Z.B       +ZENV  I                                                                        :
  :  H161.4    H07D.5 I                                                                        :
3 +---] [-------]/[---+                                                                      +
  :   X0CC     M237  I                                                                         :
  :    816     7606  I                                                                         :
  : *ALRST     MOP9   I                                                                        :
  :  H06F.7    H0CB.0 I                                                                        :
3 +---] [-------] [---+                                                                      +
  :   M127     F 88                                                                           :
  :   5102     6103                                                                           :
  : TSINTL                        DITLS                                              MOP12    : TOOL SELECT MISS OP
  :  H07F.6                        H093.3                                            H0CB.3   :  3703 *5106  6104  6201
4 +---] [-----------------------+---] [-----------------------------------------------( )---+  6701  6705 *7111 *7305
  :   M254                      I   M411                                               F 91     :
  :   3702                      I   3001                                               #2373    :
  : TSINTLS    TSINTSS    AUT.M   I                                                             :
  :  H008.3    H003.3     H047.0  I                                                             :
4 +---]/[-------]/[-------]/[---+                                                             +
  :   X043     X01B       Y038                                                                  :
  :    317     208        2114                                                                  :
  : TF         MG.N       +-------+                                                   MGTOS    : MAGAZINE TO SELECT
  :  H079.4    H141.0     I  =    I                                                   H084.7   :  6105  6106
5 +---] [-------] [-------I K    0I-----------------------------------------------------( )---+
  :   M204     X188       I  D  3I                                                     M295     :
  :   2104     706        +-------+                                                    #2379    :
  : MOP13      *ALRST                                                                 MOP13    : MAG. POCKET MISS OP
  :  H0CB.4    H06F.7                                                                 H0CB.4   :  *3202 *3203 *3308 *3309
6 +---] [-------] [---+-------------------------------------------------------------( )---+  6106  6202 *6606 *6607
  :   F 92     M127  I                                                                F 92     :
  :   6106     5102  I                                                                #2384    :
  : GRT16            I                                                                         :
  :  H079.7          I                                                                         :
6 +---] [---+--------+                                                                         +
  :   M207  I                                                                                  :
  :   3402  I                                                                                  :
  : MGTOS   I                                                                                  :
  :  H084.7 I                                                                                  :
6 +---] [---+                                                                                  +
  :   M295                                                                                     :
  :   6105                                                                                     :
  : EMOP1      ADDIS                                                                 EXMOP1   : EXTERNAL MISS OP 1
  :  H006.5    H095.4                                                                H0CC.1   :  6107  6202
7 +---] [-------] [-----------------------------------------------------------------( )---+
  :   X035     M428                                                                   F 97     :
  :    305     2201                                                                   #2387    :
  : M04ME      *ALRST   PCLL     M04ME                                                M04ME    : M04 MEMORY
  :  H069.7    H06F.7   H09B.2   H069.7                                               H069.7   :  6108  6201
8 +---] [-------] [---+---]/[-------] [-----------------------------------------------( )---+
  :   M 79     M127  I   M474    M 79                                                   M 79     :
  :   6108     5102  I   9207    6108                                                   #2394    :
  : ENGS             I                                                                         :
  :  H06B.0          I                                                                         :
8 +---] [---+--------+                                                                         +
  :   M 88  I                                                                                  :
  :   4002  I                                                                                  :
  : AEXTCD  I                                                                                  :
  :  H073.2 I                                                                                  :
8 +---] [---+                                                                                  +
  :   M154                                                                                     :
  :   4005                                                                                     :
```

REV.	DATE.	NAME.	

DRN. BY. K.MIURA	TITLE.	CONTROL.
DATE. 1.31.1986	V8C15/40	MAZATROL CAM M-2
CHK'D BY. T.HIRATA	YM2B453G	DRAWING NO.
DATE. 1.31.1986		4241681801G
APPR'D BY M.MURASE	SEQUENCE DIAGRAM	
DATE. 1.31.1986		SHEET. 57 OF. 103

YAMAZAKI MAZAK CORPORATION

```
  : MOP12                                                                    NEQ21     : NONEQUAL 21
  :   H0CB.3                                                                 H064.7    :   6201  6202
1 +---] [---+-------------------------------------------------------------------( )---+
  :   F 91  I                                                                  M 39    :
  :   6104  I                                                                #2398     :
  : MOP7    I                                                                          :
  :   H0CA.6 I                                                                         :
1 +---] [---+                                                                          +
  :   F 86  I                                                                          :
  :   6003  I                                                                          :
  : M04ME   I                                                                          :
  :   H069.7 I                                                                         :
1 +---] [---+                                                                          +
  :   M 79                                                                             :
  :   6108                                                                             :
  : MOP1                                                                     MOP       : MISS OPERATION
  :   H0CA.0                                                                 H073.7    :  *4701  4812  6202  6203
2 +---] [---+-------------------------------------------------------------------( )---+
  :   F 80  I                                                                  M159    :
  :   5907  I                                                                #2407     :
  : MOP6    I                                                                          :
  :   H0CA.5 I                                                                         :
2 +---] [---+                                                                          +
  :   F 85  I                                                                          :
  :   6002  I                                                                          :
  : MOP8    I                                                                          :
  :   H0CA.7 I                                                                         :
2 +---] [---+                                                                          +
  :   F 87  I                                                                          :
  :   6102  I                                                                          :
  : MOP9    I                                                                          :
  :   H0CB.0 I                                                                         :
2 +---] [---+                                                                          +
  :   F 88  I                                                                          :
  :   6103  I                                                                          :
  : MOP13   I                                                                          :
  :   H0CB.4 I                                                                         :
2 +---] [---+                                                                          +
  :   F 92  I                                                                          :
  :   6106  I                                                                          :
  : EXMOP1  I                                                                          :
  :   H0CC.1 I                                                                         :
2 +---] [---+                                                                          +
  :   F 97  I                                                                          :
  :   6107  I                                                                          :
  : MOP4    I                                                                          :
  :   H0CA.3 I                                                                         :
2 +---] [---+                                                                          +
  :   F 83  I                                                                          :
  :   6611  I                                                                          :
  : NEQ21   I                                                                          :
  :   H064.7 I                                                                         :
2 +---] [---+                                                                          +
  :   M 39                                                                             :
  :   6201                                                                             :
  : MOP          MOPT2                                                       +-------+ : MISS OPERATION TIMER 1
  :   H073.7       H0B2.7                                                    I  T 22 I :   6203  6204  6502
3 +---] [--------]/[-------------------------------------------------------I K    2I-+
  :   M159         T 23                                                      I H0A2.6I :
  :   6202         6204                                                      +-------+ :
  : MOPT1        RCTAL2                                                      +-------+ : MISS OPERATION TIMER 2
  :   H0B2.6       H06D.6                                                    I  T 23 I : *6203  6204
4 +---] [--------]/[-------------------------------------------------------I K    2I-+
  :   T 22         M110                                                      I H0A2.7I :
  :   6203         4802                                                      +-------+ :
  : ALSSP                                                                    ALFSP     : ALARM FEED STOP
  :   H072.0                                                                 H06F.1    :   2203  6205
5 +---] [---+-------------------------------------------------------------------( )---+
  :   M144  I                                                                  M121    :
  :   5702  I                                                                #2422     :
  : AL46    I                                                                          :
  :   H0C5.6 I                                                                         :
5 +---] [---+                                                                          +
  :   F 46  I                                                                          :
  :   5407  I                                                                          :
  : AL43    I                                                                          :
  :   H0C5.3 I                                                                         :
5 +---] [---+                                                                          +
  :   F 43  I                                                                          :
  :   5310  I                                                                          :
  : AL65    I                                                                          :
  :   H0C8.1 I                                                                         :
5 +---] [---+                                                                          +
  :   F 65  I                                                                          :
  :   5701  I                                                                          :
  : AL53    I                                                                          :
  :   H0C6.5 I                                                                         :
5 +---] [---+                                                                          +
  :   F 53  I                                                                          :
  :   5507  I                                                                          :
  : AL55    I                                                                          :
  :   H0C6.7 I                                                                         :
5 +---] [---+                                                                          +
  :   F 55                                                                             :
  :   5508                                                                             :
  : OTR.B                                                                    OTR.M     : OT REVERSE
  :   H160.5                                                                 H044.1    :   6206
6 +---] [-------------------------------------------------------------------( )---+
  :   X0C5                                                                     Y021    :
  :    811                                                                    #2424    :
```

DRN. BY. K.MIURA	TITLE.	CONTROL.
DATE. 1.31.1986	V9C15/40	MAZATROL CAM M-2
CHK'D BY. T.HIRATA	YM2B453G	DRAWING NO.
DATE. 1.31.1986		4241681801G
APPR'D BY M.MURASE	SEQUENCE DIAGRAM	
DATE. 1.31.1986		SHEET. 62 OF. 103

REV.	DATE.	NAME.

YAMAZAKI MAZAK CORPORATION

```
  : AL1                                                                                  MFAIL1    : MACHINE FAIL DIVISION 1
  :   H0C0.1                                                                             H078.0    :   6301  6502
1 +---] [-----------------------------------------------------------------------------------( )---->
  :   F  1   I                                                                             M192    :
  :   5105   I                                                                            #2432    :
  : AL2      I                                                                                     :
  :   H0C0.2 I                                                                                     :
1 +---] [---->                                                                                     *
  :   F  2   I                                                                                     :
  :   5107   I                                                                                     :
  : AL25     I                                                                                     :
  :   H0C3.1 I                                                                                     :
1 +---] [---->                                                                                     *
  :   F 25   I                                                                                     :
  :   5110   I                                                                                     :
  : AL26     I                                                                                     :
  :   H0C3.2 I                                                                                     :
1 +---] [---->                                                                                     *
  :   F 26   I                                                                                     :
  :   5201   I                                                                                     :
  : AL27     I                                                                                     :
  :   H0C3.3 I                                                                                     :
1 +---] [---->                                                                                     *
  :   F 27   I                                                                                     :
  :   5208   I                                                                                     :
  : AL28     I                                                                                     :
  :   H0C3.4 I                                                                                     :
1 +---] [---->                                                                                     *
  :   F 28   I                                                                                     :
  :   5209   I                                                                                     :
  : AL0      I                                                                                     :
  :   H0C0.0 I                                                                                     :
1 +---] [---->                                                                                     *
  :   F  0                                                                                         :
  :   5103                                                                                         :
  : AL43                                                                                 MFAIL2    : MACHINE FAIL DIVISION 2
  :   H0C5.3                                                                             H078.1    :   6302  6502
2 +---] [-----------------------------------------------------------------------------------( )---->
  :   F 43   I                                                                             M193    :
  :   5310   I                                                                            #2438    :
  : AL44     I                                                                                     :
  :   H0C5.4 I                                                                                     :
2 +---] [---->                                                                                     *
  :   F 44   I                                                                                     :
  :   5405   I                                                                                     :
  : AL45     I                                                                                     :
  :   H0C5.5 I                                                                                     :
2 +---] [---->                                                                                     *
  :   F 45   I                                                                                     :
  :   5406   I                                                                                     :
  : AL46     I                                                                                     :
  :   H0C5.6 I                                                                                     :
2 +---] [---->                                                                                     *
  :   F 46   I                                                                                     :
  :   5407   I                                                                                     :
  : AL60     I                                                                                     :
  :   H0C7.4 I                                                                                     :
2 +---] [---->                                                                                     *
  :   F 60                                                                                         :
  :   5602                                                                                         :
  : AL51                                                                                 MFAIL3    : MACHINE FAIL DIVISION 3
  :   H0C6.3                                                                             H078.2    :   6303  6502
3 +---] [-----------------------------------------------------------------------------------( )---->
  :   F 51   I                                                                             M194    :
  :   5504   I                                                                            #2445    :
  : AL53     I                                                                                     :
  :   H0C6.5 I                                                                                     :
3 +---] [---->                                                                                     *
  :   F 53   I                                                                                     :
  :   5507   I                                                                                     :
  : AL54     I                                                                                     :
  :   H0C6.6 I                                                                                     :
3 +---] [---->                                                                                     *
  :   F 54   I                                                                                     :
  :   5505   I                                                                                     :
  : AL55     I                                                                                     :
  :   H0C6.7 I                                                                                     :
3 +---] [---->                                                                                     *
  :   F 55   I                                                                                     :
  :   5508   I                                                                                     :
  : AL57     I                                                                                     :
  :   H0C7.1 I                                                                                     :
3 +---] [---->                                                                                     *
  :   F 57   I                                                                                     :
  :   5601   I                                                                                     :
  : AL65     I                                                                                     :
  :   H0C8.1 I                                                                                     :
3 +---] [---->                                                                                     *
  :   F 65                                                                                         :
  :   5701                                                                                         :
```

				DRN. BY. K.MIURA	TITLE.	CONTROL.
				DATE. 1.31.1986	VQC15/40	MAZATROL CAM M-2
				CHK'D BY. T.HIRATA	YM2B453G	DRAWING NO.
				DATE. 1.31.1986		42416818016
				APPR'D BY. M.MURASE	SEQUENCE DIAGRAM	
				DATE. 1.31.1986		SHEET 63 OF 103
REV.	DATE.	NAME.		YAMAZAKI MAZAK CORPORATION		

```
  : AL61                                                                                    MFAIL4    : MACHINE FAIL DIVISION 4
  :   H0C7.5                                                                                H078.3    :   6401  6502
1 *---] [---*------------------------------------------------------------------------------( )-----*
  :     F 61   I                                                                            M195      :
  :     5204   I                                                                            #2454     :
  : AL62       I                                                                                      :
  :   H0C7.6   I                                                                                      :
1 *---] [---*                                                                                        *
  :     F 62   I                                                                                      :
  :     5205   I                                                                                      :
  : AL63       I                                                                                      :
  :   H0C7.7   I                                                                                      :
1 *---] [---*                                                                                        *
  :     F 63   I                                                                                      :
  :     5206   I                                                                                      :
  : AL64       I                                                                                      :
  :   H0C8.0   I                                                                                      :
1 *---] [---*                                                                                        *
  :     F 64   I                                                                                      :
  :     5207   I                                                                                      :
  : AL71       I                                                                                      :
  :   H0C8.7   I                                                                                      :
1 *---] [---*                                                                                        *
  :     F 71   I                                                                                      :
  :     5804   I                                                                                      :
  : AL72       I                                                                                      :
  :   H0C9.0   I                                                                                      :
1 *---] [---*                                                                                        *
  :     F 72   I                                                                                      :
  :     5805   I                                                                                      :
  : AL73       I                                                                                      :
  :   H0C9.1   I                                                                                      :
1 *---] [---*                                                                                        *
  :     F 73   I                                                                                      :
  :     5807   I                                                                                      :
  : AL74       I                                                                                      :
  :   H0C9.2   I                                                                                      :
1 *---] [---*                                                                                        *
  :     F 74                                                                                          :
  :     5808                                                                                          :
  : AL37                                                                                    MFAIL5    : MACHINE FAIL DIVISION 5
  :   H0C4.5                                                                                H078.4    :   6402  6502
2 *---] [---*------------------------------------------------------------------------------( )-----*
  :     F 37   I                                                                            M196      :
  :     5301   I                                                                            #2462     :
  : AL38       I                                                                                      :
  :   H0C4.6   I                                                                                      :
2 *---] [---*                                                                                        *
  :     F 38   I                                                                                      :
  :     5302   I                                                                                      :
  : AL56       I                                                                                      :
  :   H0C7.0   I                                                                                      :
2 *---] [---*                                                                                        *
  :     F 56   I                                                                                      :
  :     5509   I                                                                                      :
  : AL75       I                                                                                      :
  :   H0C9.3   I                                                                                      :
2 *---] [---*                                                                                        *
  :     F 75   I                                                                                      :
  :     5901   I                                                                                      :
  : AL76       I                                                                                      :
  :   H0C9.4   I                                                                                      :
2 *---] [---*                                                                                        *
  :     F 76   I                                                                                      :
  :     5902   I                                                                                      :
  : AL77       I                                                                                      :
  :   H0C9.5   I                                                                                      :
2 *---] [---*                                                                                        *
  :     F 77   I                                                                                      :
  :     5903   I                                                                                      :
  : AL78       I                                                                                      :
  :   H0C9.6   I                                                                                      :
2 *---] [---*                                                                                        *
  :     F 78                                                                                          :
  :     5904                                                                                          :
```

				DRN. BY. K.MIURA	TITLE.	CONTROL.
				DATE. 1.31.1986	VQC15/40	MAZATROL CAM M-2
				CHK'D BY. T.HIRATA	YM2B453G	DRAWING NO.
				DATE. 1.31.1986		42416818016
				APPR'D BY. M.MURASE	SEQUENCE DIAGRAM	
				DATE. 1.31.1986		SHEET. 64 OF. 103
REV.	DATE.	NAME.		YAMAZAKI MAZAK CORPORATION		

```
  : AL69        AUT.M       2PCS                                                                  :
  :  H0C8.5     H047.0      H093.0                                                  H091.2 :  6501  6502#10204
1 +---] [-------] [---+---] [-------------------------------------------------------( )---+
  :   F 69       Y038   I   M408                                                     M394  :
  :   5705       2114   I   3805                                                     #2471 :
  : AL39                I                                                                  :
  :  H0C4.7             I                                                                  :
1 +---] [---+-----------+                                                                  +
  :   F 39   I                                                                             :
  :   5304   I                                                                             :
  : AL40     I                                                                             :
  :  H0C5.0  I                                                                             :
1 +---] [---+                                                                              +
  :   F 40   I                                                                             :
  :   5305   I                                                                             :
  : AL41     I                                                                             :
  :  H0C5.1  I                                                                             :
1 +---] [---+                                                                              +
  :   F 41   I                                                                             :
  :   5306   I                                                                             :
  : AL42     I                                                                             :
  :  H0C5.2  I                                                                             :
1 +---] [---+                                                                              +
  :   F 42   I                                                                             :
  :   5307   I                                                                             :
  : AL70     I                                                                             :
  :  H0C8.6  I                                                                             :
1 +---] [---+                                                                              +
  :   F 70                                                                                 :
  :   5801                                                                                 :
  : MFAIL1                                                                   MFAIL.L       : MACHINE FAIL LAMP
  :  H078.0                                                                  H11D.4       :  4701  4812  6502
2 +---] [---+-------------------------------------------------------------------( )---+
  :   M192   I                                                                  Y1EC      :
  :   6301   I                                                                  #2479     :
  : MFAIL2   I                                                                             :
  :  H078.1  I                                                                             :
2 +---] [---+                                                                              +
  :   M193   I                                                                             :
  :   6302   I                                                                             :
  : MFAIL3   I                                                                             :
  :  H078.2  I                                                                             :
2 +---] [---+                                                                              +
  :   M194   I                                                                             :
  :   6303   I                                                                             :
  : MFAIL4   I                                                                             :
  :  H078.3  I                                                                             :
2 +---] [---+                                                                              +
  :   M195   I                                                                             :
  :   6401   I                                                                             :
  : MOPT1    I                                                                             :
  :  H0B2.6  I                                                                             :
2 +---] [---+                                                                              +
  :   T 22   I                                                                             :
  :   6203   I                                                                             :
  : MFAIL5   I                                                                             :
  :  H078.4  I                                                                             :
2 +---] [---+                                                                              +
  :   M196   I                                                                             :
  :   6402   I                                                                             :
  :          I                                                                             :
  :  H091.2  I                                                                             :
2 +---] [---+                                                                              +
  :   M394                                                                                 :
  :   6501                                                                                 :
  : MDI.N       TF          MG.N                                                   MDITCME       : MDI MODE TOOL CHANGE MEMORY
  :  H140.1     H079.4      H141.0                                                  H077.7 :  6503  6505  8005  8707
3 +---] [---+---] [-------]/[-------------------------------------------------------( )---+
  :   X181   I   M204       X188                                                    M191  :
  :    619   I   2104        706                                                    #2484 :
  : MDITCME  I                                                                             :
  :  H077.7  I                                                                             :
3 +---] [---+                                                                              +
  :   M191                                                                                 :
  :   6503                                                                                 :
  : AUT.N       TF          MG.N                                                   AUTTCME       : AUTO MODE TOOL CHANGE MEMORY
  :  H140.0     H079.4      H141.0                                                  H077.6 :  6504  6505  8004  8706
4 +---] [---+---] [-------]/[-------------------------------------------------------( )---+
  :   X180   I   M204       X188                                                    M190  :
  :    618   I   2104        706                                                    #2489 :
  : AUTTCME  I                                                                             :
  :  H077.6  I                                                                             :
4 +---] [---+                                                                              +
  :   M190                                                                                 :
  :   6504                                                                                 :
  : AUTTCME                                                                  TCME          : TOOL CHANGE MEMORY
  :  H077.6                                                                  H074.0       : *2603 *2604 *2701  2806
5 +---] [---+-------------------------------------------------------------------( )---+  *2808  3303 *3303 *3409
  :   M190   I                                                                  M160      :  3702  3703  3704
  :   6504   I                                                                  #2492     :
  : MDITCME  I                                                                             :
  :  H077.7  I                                                                             :
5 +---] [---+                                                                              +
  :   M191                                                                                 :
  :   6503                                                                                 :
```

				DRN. BY. K.MIURA	TITLE.	CONTROL.
				DATE. 1.31.1986	VQC15/40	MAZATROL CAM M-2
				CHK'D BY. T.HIRATA	YM2B453G	DRAWING NO.
				DATE. 1.31.1986		42416818016
				APPR'D BY. M.MURASE	SEQUENCE DIAGRAM	
				DATE. 1.31.1986		SHEET. 65 OF. 103
REV.	DATE.	NAME.		YAMAZAKI MAZAK CORPORATION		

```
: OTR.B      MGCORS                                                          TCME.M    : BARRIER EXPEND at ATC ARE
:  H160.5    H00A.2                                                           H046.3   :   6601  7505
1 *---] [---------] [---*-------------------------------------------------------( )---*
:   X0C5      X052   I                                                          Y033    :
:    811       403   I                                                         #2496   :
: TCME               I                                                                  :
:  H074.0            I                                                                  :
1 *---] [------------*                                                                  :
:   M160                                                                                *
:   6505                                                                                :
: TCME                                                                                  :
:  H074.0                                                                   +-------+ :
2 *---] [-----------------------------------------------------------------I MOV   I :
:   M160                                                                   I K2X168I-*
:   6505                                                                   I  .D  1I :
: TCME                                                                      +-------+ :
:  H074.0                                                                   +-------+ :
3 *---] [-----------------------------------------------------------------I MOV   I :
:   M160                                                                   I K2X140I-*
:   6505                                                                   I   D  2I :
: TCME          +-------+                                                   +-------+ :
:  H074.0       I  =    I                                                   TS0       : SPINDLE TOOL=0
4 *---] [-------I K    0I-----------------------------------------------------( )---*  H074.4   :   6604 *6608  6609 *7104
:   M160        I   D  1I                                                     M164    :  *7205  7301
:   6505        +-------+                                                    #2509   :
: TCME          +-------+                                                   TO        : TOOL=0
:  H074.0       I  =    I                                                   H074.5   :   4201  6605 *7104  7205
5 *---] [-------I K    0I-----------------------------------------------------( )---*  *7301
:   M160        I   D  2I                                                     M165    :
:   6505        +-------+                                                    #2514   :
: TCME          MOP13          +-------+                                    EQTST     : EQUAL TOOL SELECT
:  H074.0       H0CB.4         I  =    I                                    H07C.6   :   2505 *2806 *4103 *6001
6 *---] [-------]/[-----------I   D  1I-----------------------------------------( )---*   6606 *6607 *6608 *6609
:   M160         F 92          I   D  2I                                     M230    :  *6703
:   6505         6106          +-------+                                    #2520   :
: TCME          MOP13          EQTST      MOP4       MEMD-4     MEME-3     MEMF-3    MGCOME1   : MAGAZINE COVER OPEN MEMORY 1
:  H074.0       H0CB.4         H07C.6     H0CA.3     H082.6     H083.5     H084.5    H074.1   :  *2906  6607
7 *---] [-------]/[-----------]/[---------]/[-------]/[-------]/[-------]/[-----------( )---*
:   M160         F 92          M230       F 83       M278       M285       M293      M161    :
:   6505         6106          6606       6611       7201       7210       7306      #2528   :
: TCME          TS0            EQTST                                                TULME     : TOOL UNLOAD MEMORY
:  H074.0       H074.4         H07C.6                                               H074.6   :   6608  6610  6706  6707
8 *---] [-------]/[-----------]/[-----------------------------------------------------( )---*   6708  6709  6802  6803
:   M160         M164          M230                                                  M166    :   6811
:   6505         6604          6606                                                 #2532   :
: TCME          TS0            EQTST                                                TLME      : TOOL LOAD MEMORY
:  H074.0       H074.4         H07C.6                                               H074.7   :   6609  6610  6706  6707
9 *---] [-------] [-----------]/[-----------------------------------------------------( )---*   6801  7006
:   M160         M164          M230                                                  M167    :
:   6505         6604          6606                                                 #2536   :
: TLME                                                                              +-------+ : MISS OPERATION 1
:  H074.7                                                                           I PLS   I :   6610  6611
10 *---] [---*-------------------------------------------------------------------I M151  I-*
:   M167    I                                                                       I H072.7I :
:   6609    I                                                                       +-------+ :
: TULME     I                                                                                 :
:  H074.6   I                                                                                 :
10 *---] [---*                                                                                 *
:   M166                                                                                       :
:   6608                                                                                       :
: ZPZ1.N     ZPZ2.N      MOP1       EIA.N      AZRNS                            MOP4      : MDI TOOL CHANGE MISS OP.
:  H130.2    H131.2      H072.7     H143.5     H09E.1                           H0CA.3   :   6202 *6607  6611 *7701
11 *---]/[---------]/[---*---] [---------] [---*---] [-----------------------------( )---*  *7704 *7801 *7803 *7908
:   X102      X10A   I   M151       X19D   I   M497                              F 83    :  *7909
:    502       506   I   6610        719   I   6611                             #2549   :
: ZPY1.N            I                        I                                            :
:  H130.1           I                        I                                            :
11 *---]/[----------*                        *                                            *
:   X101                                     I                                            :
:    501                                     I                                            :
: *RST       MOP4                            I                                            :
:  H060.0    H0CA.3                          I                                            :
11 *---] [---------] [-----------------------*                                            *
:   M 0      F 83                                                                         :
:   2113     6611                                                                         :
: ATCSP.B                                                                           +-------+ : ATC STOP PULSE
:  H165.0                                                                           I PLS   I :   6612  6613  6614
12 *---] [-----------------------------------------------------------------------I M 48  I-*
:   X0E8                                                                            I H066.0I :
:    918                                                                            +-------+ :
: ATCSPPLS   ATCSP.L                                                                ATCSPOF   : ATC STOP OFF
:  H066.0    H11B.0                                                               H066.1   :   6613 *6614
13 *---] [---------] [-----------------------------------------------------------------( )---*
:   M 48     Y1D8                                                                   M 49    :
:   6612     6701                                                                  #2554   :
: ATCSPPLS   ATCSPOF                                                                TCFSX     : TOOL CLAMP FOOTSWITCH AUX
:  H066.0    H066.1                                                               H068.1   :   6614  6701
14 *---] [---*---]/[-----------------------------------------------------------------( )---*
:   M 48    I  M 49                                                                 M 65    :
:   6612    I  6613                                                                #2558   :
: TCFSX     I                                                                                 :
:  H068.1   I                                                                                 :
14 *---] [---*                                                                                 *
:   M 65                                                                                       :
:   6614                                                                                       :
```

DRN. BY. K.MIURA	TITLE.	CONTROL.
DATE. 1.31.1986	V9C15/40	MAZATROL CAM M-2
CHK'D BY. T.HIRATA	YM2B453G	DRAWING NO.
DATE. 1.31.1986		42416819016
APPR'D BY. M.MURASE	SEQUENCE DIAGRAM	
DATE. 1.31.1986		SHEET. 66 OF. 109

REV.	DATE.	NAME.

YAMAZAKI MAZAK CORPORATION

```
  : TCFSX                                                                                    ATCSP.L  : ATC STOP LAMP
  : H068.1                                                                                    H11B.0  :  6613  6701  6702  6703
1 *---] [-----------*-------------------------------------------------------------------------( )---*
  :   M 65          I                                                                          Y1D8  :
  :   6614          I                                                                         #2563  :
  : MOP12     AUT.N I                                                                                  :
  : H0CB.3    H140.0 I                                                                                 :
1 *---] [-------] [---*                                                                                *
  :   F 91      X180                                                                                   :
  :   6104       618                                                                                   :
  : ATCSP.L                                                                                   ATCSP.N  :
  : H11B.0                                                                                    H115.0  :  6702
2 *---] [-------------------------------------------------------------------------------------( )---*
  :   Y1D8                                                                                     Y1A8  :
  :   6701                                                                                    #2565  :
  : ATCSP.L   TCMEX     TCME      EQTST                                                       ATCSTPME : ATC STOP MEMORY
  : H11B.0    H067.6    H074.0    H07C.6                                                      H075.0  :  6703 *7106 *7207 *7303
3 *---] [-------]/[-------] [---*---]/[-------------------------------------------------------( )---*
  :   Y1D8      M 62      M160  I   M230                                                       M168  :
  :   6701      6704      6505  I   6606                                                      #2574  :
  : CSTBX     ATCSTPME          I                                                                    :
  : H076.3    H075.0            I                                                                    :
3 *---]/[---*---] [-----------*                                                                        *
  :   M179  I   M168                                                                                 :
  :   2201  I   6703                                                                                 :
  : ATCSP.L I                                                                                        :
  : H11B.0  I                                                                                        :
3 *---] [---*                                                                                        *
  :   Y1D8                                                                                           :
  :   6701                                                                                           :
  : TCME                                                                                      TCMEX    : TOOL CHANGE MEMORY AUX
  : H074.0                                                                                    H067.6  :  *6703  6704
4 *---] [-------------------------------------------------------------------------------------( )---*
  :   M160                                                                                     M 62  :
  :   6505                                                                                    #2576  :
  : FINF      ATCFHDME  CSTBX     *RST                                                        ATCFHDME : ATC FEED HOLD MEMORY
  : H06E.5    H075.1    H076.3    H060.0                                                      H075.1  :  2203  6705 *6806 *6807
5 *---]/[---*---] [-------]/[---*---] [-------------------------------------------------------( )---*  *6905 *6906 *7004 *7503
  :   M117  I   M169      M179  I   M  0                                                       M169  :  *7504 *7701 *7704
  :   5002  I   6705      2201  I   2113                                                      #2588  :
  : SPL.N   I                     I                                                                  :
  : H132.2  I                     I                                                                  :
5 *---]/[---*                     *                                                                  *
  :   X112                        I                                                                  :
  :    508                        I                                                                  :
  : FHDBX     TCME                I                                                                  :
  : H076.2    H074.0              I                                                                  :
5 *---] [-------] [-----------*                                                                        *
  :   M178      M160              I                                                                  :
  :   2202      6505              I                                                                  :
  : ATCFINME  MOP12               I                                                                  :
  : H091.3    H0CB.3              I                                                                  :
5 *---] [-------] [-----------*                                                                        *
  :   M395      F 91                                                                                 :
  :   7901      6104                                                                                 :
  : TF        MG.N                                                                          +-------+ : TF TIMER 1
  : H079.4    H141.0                                                                        I  T 24 I :  4108  6706 *6707
6 *---] [-------] [---*-----------------------------------------------------------------------I K   2I-*
  :   M204      X188  I                                                                       I H0A3.0I :
  :   2104       706  I                                                                       +-------+ :
  : TF        TLME    I                                                                                  :
  : H079.4    H074.7  I                                                                                  :
6 *---] [-------] [---*                                                                                *
  :   M204      M167  I                                                                                  :
  :   2104      6609  I                                                                                  :
  : TF        TULME   I                                                                                  :
  : H079.4    H074.6  I                                                                                  :
6 *---] [-------] [---*                                                                                *
  :   M204      M166                                                                                     :
  :   2104      6608                                                                                     :
  : TF        MG.N      TFT1                                                                    TFP1   : T FUNCTION PULSE 1
  : H079.4    H141.0    H0B3.0                                                                  H075.3  :  2502  6707
7 *---] [-------] [---*---]/[-------------------------------------------------------------------( )---*
  :   M204      X188  I   T 24                                                                   M171  :
  :   2104       706  I   6706                                                                  #2608  :
  : TF        TLME    I                                                                                  :
  : H079.4    H074.7  I                                                                                  :
7 *---] [-------] [---*                                                                                *
  :   M204      M167  I                                                                                  :
  :   2104      6609  I                                                                                  :
  : TF        TULME   I                                                                                  :
  : H079.4    H074.6  I                                                                                  :
7 *---] [-------] [---*                                                                                *
  :   M204      M166                                                                                     :
  :   2104      6608                                                                                     :
  : MEMD-2    TULME                                                                         +-------+ : TF TIMER 2
  : H082.2    H074.6                                                                        I  T 25 I :  6708 *6709
8 *---] [-------] [-----------------------------------------------------------------------I K   2I-*
  :   M274      M166                                                                          I H0A3.1I :
  :   7107      6608                                                                          +-------+ :
  : MEMD-2    TULME     TFT2                                                                    TFP2   : T FUNCTION PULSE 2
  : H082.2    H074.6    H0B3.1                                                                  H075.4  :  2502  6709
9 *---] [-------] [-------]/[-------------------------------------------------------------------( )---*
  :   M274      M166      T 25                                                                   M172  :
  :   7107      6608      6708                                                                  #2616  :
```

		DRN. BY. K.MIURA	TITLE.
		DATE. 1.31.1986	VQC15/40
		CHK'D BY. T.HIRATA	YM2B453G
		DATE. 1.31.1986	
		APPR'D BY. M.MURASE	SEQUENCE DIAGRAM
		DATE. 1.31.1986	
REV.	DATE.	NAME.	

CONTROL. MAZATROL CAM M-2

DRAWING NO. 4241681801G

SHEET. 67 OF. 103

YAMAZAKI MAZAK CORPORATION

```
  : MG.N                                                                                    LOADT     : LD. OR MAG. TOOL SELECT
  : H141.0                                                                                  H075.6    :   3107  6801
1 +---] [---+------------------------------------------------------------------------------( )---+
  :   X188  I                                                                               M174      :
  :    706  I                                                                               #2620     :
  : TLME    I                                                                                         :
  : H074.7  I                                                                                         :
1 +---] [---+                                                                                         +
  :   M167  I                                                                                         :
  :   6609  I                                                                                         :
  : MEMD-2  I                                                                                         :
  : H082.2  I                                                                                         :
1 +---] [---+                                                                                         +
  :   M274                                                                                            :
  :   7107                                                                                            :
  : TULME     MEMD-1                                                                        UNLOADT   : UNLOADING TOOL SELECT
  : H074.6    H082.0                                                                        H075.7    :   3108  6802
2 +---] [-------]/[-------------------------------------------------------------------------( )---+
  :   M166      M272                                                                          M175      :
  :   6608      7105                                                                          #2623     :
  : INTF.N    EIA.N       TULME       MARETL                                                CYCLE-A   : ATC A CYCLE
  : H141.1    H143.5      H074.6      H08D.3                                                H077.0    :   6803  6804  6805  6807
3 +---] [-------]/[---+---] [-------] [-------------------------------------------------------( )---+   6809  6810 10207
  :   X189      X19D  I   M166        M363                                                  M184      :
  :    707      719   I   6608        2911                                                  #2629     :
  : CYCLE-A           I                                                                               :
  : H077.0            I                                                                               :
3 +---] [-----------+                                                                               +
  :   M184                                                                                            :
  :   6803                                                                                            :
  : ZPZ2.N    CYCLE-A     TCME                                                                  MEMA-1    : ATC MEMORY A-1
  : H131.2    H077.0      H074.0                                                                H077.1    :   6804 *6805  7104  7205
4 +---] [---+---] [-------] [-------------------------------------------------------------------( )---+   7502  8004
  :   X10A  I   M184        M160                                                                  M185      :
  :    506  I   6803        6505                                                                  #2634     :
  : MEMA-1  I                                                                                         :
  : H077.1  I                                                                                         :
4 +---] [---+                                                                                         +
  :   M185                                                                                            :
  :   6804                                                                                            :
  : CYCLE-A   MEMA-1                                                                            CNDA-1    : ATC PROCESS A-1
  : H077.0    H077.1                                                                            H077.2    :   6805  6806  7501  7801
5 +---] [-------]/[-------------------------------------------------------------------------( )---+
  :   M184      M185                                                                          M186      :
  :   6803      6804                                                                          #2637     :
  : CNDA-1    ATCFHDME                                                                        +-------+ : ATC PROCESS A-1 TIMER
  : H077.2    H075.1                                                                          I  T 31 I :   6806  6808
6 +---] [-------]/[-------------------------------------------------------------------------I K   10I-+
  :   M186      M169                                                                          I H0A3.7I :
  :   6805      6705                                                                          +-------+ :
  : SMZ2.N    CYCLE-A     ATCFHDME                                                          MOVZME    : MOVING Z MEMORY
  : H142.2    H077.0      H075.1                                                            H075.5    :   6807 *6808 *7005
7 +---]/[---+---] [---+---]/[-------------------------------------------------------------( )---+
  :   X192  I   M184    I   M169                                                              M173      :
  :    716  I   6803    I   6705                                                              #2648     :
  : MOVZME  I CYCLE-B   I                                                                               :
  : H075.5  I H080.0    I                                                                               :
7 +---] [---+---] [---+                                                                               +
  :   M173      M256                                                                                    :
  :   6807      6811                                                                                    :
  : MOVZME    CND1T                                                                         CNDA1X    : ATC MEMORY A-1 AUX
  : H075.5    H0B3.7                                                                        H077.5    :   6808 *7801  7803
8 +---]/[---+---] [-------------------------------------------------------------------------( )---+
  :   M173  I   T 31                                                                          M189      :
  :   6807  I   6806                                                                          #2652     :
  : CNDA1X  I                                                                                         :
  : H077.5  I                                                                                         :
8 +---] [---+                                                                                         +
  :   M189                                                                                            :
  :   6808                                                                                            :
  : ZPY1.N    CYCLE-A     TCME                                                                  MEMA-2    : ATC MEMORY A-2
  : H130.1    H077.0      H074.0                                                                H077.3    :   6809 *6810  7104  7205
9 +---] [---+---] [-------] [-------------------------------------------------------------------( )---+   7502  8004*10207
  :   X101  I   M184        M160                                                                  M187      :
  :    501  I   6803        6505                                                                  #2657     :
  : MEMA-2  I                                                                                         :
  : H077.3  I                                                                                         :
9 +---] [---+                                                                                         +
  :   M187                                                                                            :
  :   6809                                                                                            :
  : CYCLE-A   MEMA-2                                                                            CNDA-2    : ATC PROCESS A-2
  : H077.0    H077.3                                                                            H077.4    :   6810  7403  7701
10 +---] [-------]/[-------------------------------------------------------------------------( )---+
  :   M184      M187                                                                          M188      :
  :   6803      6809                                                                          #2660     :
  : INTF.N    TULME       MARETL                                                            CYCLE-B   : ATC B CYCLE
  : H141.1    H074.6      H08D.3                                                            H080.0    :   6807  6811  6901  6902
11 +---]/[---+---] [-------] [-------------------------------------------------------------( )---+   6903  6906  6908  7002
  :   X189  I   M166        M363                                                              M256      :  10207
  :    707  I   6608        2911                                                              #2665     :
  : EIA.N   I                                                                                         :
  : H143.5  I                                                                                         :
11 +---] [---                                                                                         +
  :   X19D                                                                                            :
  :    719                                                                                            :
```

REV.	DATE.	NAME.	

DRN. BY. K.MIURA
DATE. 1.31.1986
CHK'D BY. T.HIRATA
DATE. 1.31.1986
APPR'D BY. M.MURASE
DATE. 1.31.1986

TITLE.
V0C15/40
YM2B453G
SEQUENCE DIAGRAM

CONTROL.
MAZATROL CAM M-2

DRAWING NO.
4241681801G

SHEET. 68 OF. 103

YAMAZAKI MAZAK CORPORATION

```
  : MDI.L      ZPY1.N      CYCLE-B     TCME                                                    MEMB-1    : ATC MEMORY B-1
  : H118.1     H130.1      H080.0      H074.0                                                  H080.1    :  6901 *6902  6903  6904
1 +---] [----+---] [----+---] [-------] [-----------------------------------------------------( )-----+  6908  7001  7403  7501
  :   Y1C1   I   X101   I   M256        M160                                                    M257      :  8002
  :   8707   I    501   I   6811        6505                                                    #2673     :
  : XATCS      I         I                                                                                :
  : H096.3     I         I                                                                                :
1 +---]/[----+           +                                                                                +
  :   M435               I                                                                                :
  :   6901               I                                                                                :
  : ZPZ1.N               I                                                                                :
  : H130.2               I                                                                                :
1 +---] [----+-----------+                                                                                +
  :   X102   I
  :    502   I
  : MEMB-1   I
  : H080.1   I
1 +---] [----+                                                                                           +
  :   M257
  :   6901
  : CYCLE-B    MEMB-1                                                                                  CNDB-1    : ATC PROCESS B-1
  : H080.0     H080.1                                                                                  H080.2    :  6902  7403  7802
2 +---] [-------]/[-----------------------------------------------------------------------------( )-----+
  :   M256       M257                                                                                  M258      :
  :   6811       6901                                                                                  #2676     :
  : ZPX2.N     MEMB-1      CYCLE-B     TCME        XATCS                                             MEMB2AX   : ATC MEMORY B-2 AUX
  : H131.0     H080.1      H080.0      H074.0      H096.3                                            H060.4    :  6903 *6904  7003  7403
3 +---] [-------] [----+---] [-------] [-------] [-----------------------------------------------( )-----+  7501 *7501  8003
  :   X108       M257   I   M256        M160        M435                                              M  4      :
  :    504       6901   I   6811        6505        6901                                              #2683     :
  : MEMB2AX             I                                                                                :
  : H060.4              I                                                                                :
3 +---] [-------------+                                                                                  +
  :   M  4
  :   6903
  : AUT.N      MEMB-1      MEMB2AX     XATCS       MDI.L                                             CNDB2AX   : ATC PROCESS B-2 AUX
  : H140.0     H080.1      H060.4      H096.3      H118.1                                            H060.7    :  6904  6905  7908
4 +---] [----+---] [-------]/[-------] [-------]/[-----------------------------------------------( )-----+
  :   X180   I   M257       M  4        M435        Y1C1                                              M  7      :
  :    618   I   6901       6903        6901        8707                                              #2691     :
  : MEMB-2   I                                                                                              :
  : H080.3   I                                                                                              :
4 +---] [----+                                                                                           +
  :   M259   I
  :   6908   I
  : CNDB2AX  I
  : H060.7   I
4 +---] [----+                                                                                           +
  :   M  7
  :   6904
  : CNDB2AX    ATCFHOME                                                                                +-------+ : ZY1 POINT OVER DELAY TIMER
  : H060.7     H075.1                                                                                  I T 58 I  :  6905  6907
5 +---] [-------]/[-----------------------------------------------------------------------------I K   10I-+
  :   M  7       M169                                                                                  I H0A7.2I :
  :   6904       6705                                                                                  +-------+ :
  : SMZX.N     CYCLE-B     ATCFHOME                                                                  MOVXME    : MOVING X MEMORY
  : H142.0     H080.0      H075.1                                                                    H061.0    :  6906 *6907
6 +---]/[----+---] [-------]/[-----------------------------------------------------------------------( )-----+
  :   X190   I   M256        M169                                                                    M  8      :
  :    714   I   6811        6705                                                                    #2700     :
  : MOVXME   I                                                                                              :
  : H061.0   I                                                                                              :
6 +---] [----+                                                                                           +
  :   M  8
  :   6906
  : MOVXME     ZY10VDT                                                                                 CNDB2AXX  : ATC PROCESS B-2 AUXX
  : H061.0     H0B7.2                                                                                  H061.1    :  6907 *7908  7909
7 +---]/[----+---] [-----------------------------------------------------------------------------( )-----+
  :   M  8   I   T 58                                                                                  M  9      :
  :   6906   I   6905                                                                                  #2704     :
  : CNDB2AXX I                                                                                              :
  : H061.1   I                                                                                              :
7 +---] [----+                                                                                           +
  :   M  9
  :   6907
  : ZPY1.N     MEMB-1      CYCLE-B     TCME                                                    MEMB-2    : ATC MEMORY B-2
  : H130.1     H080.1      H080.0      H074.0                                                  H080.3    :  6904  6908 *7001  7002
8 +---] [-------] [----+---] [-------] [-----------------------------------------------------( )-----+  7003 *7403  7501  8003
  :   X101       M257   I   M256        M160                                                    M259      :
  :    501       6901   I   6811        6505                                                    #2710     :
  : MEMB-2              I                                                                                :
  : H080.3              I                                                                                :
8 +---] [-------------+                                                                                  +
  :   M259
  :   6908
```

				DRN. BY. K.MIURA	TITLE.	CONTROL.
				DATE. 1.31.1986	VQC15/40	MAZATROL CAM M-2
				CHK'D BY. T.HIRATA	YM2B453G	DRAWING NO.
				DATE. 1.31.1986		4241681801G
				APPR'D BY. M.MURASE	SEQUENCE DIAGRAM	
				DATE. 1.31.1986		SHEET. 69 OF. 103
REV.	DATE.	NAME.		YAMAZAKI MAZAK CORPORATION		

```
  : AUT.N        XATCS       MEMB-1      MEMB-2                                                    CNDB-2     : ATC PROCESS B-2
  :  H140.0      H096.3       H080.1      H080.3                                                    H080.4     :  7001  7701
1 +---] [---+---] [---+---] [---+---]/[-----------------------------------------------------------( )---+
  :   X180   I   M435   I   M257       M259                                                         M260       :
  :    618   I   6901   I   6901       6908                                                         #2718      :
  : MDI.L     I         I
  :  H118.1   I         I
1 +---] [---+         +
  :   Y1C1              I
  :   8707              I
  : CNDB-2              I
  :  H080.4             I
1 +---] [---+---------+
  :   M260   I
  :   7001   I
  : XATCS    I
  :  H096.3  I
1 +---]/[---+
  :   M435
  :   6901
  : MEMB-2       ZPI2.N      CYCLE-B     TCME                                                      MEMV-3     : ATC MEMORY B-3
  :  H080.3      H131.2       H080.0      H074.0                                                    H080.5     :  7002 *7003  7104  7205
2 +---] [---+---] [---+---] [---+---] [-----------------------------------------------------------( )---+  *7501  7502*10207
  :   M259   I   X10A   I   M256       M160                                                         M261       :
  :   6908   I    506   I   6811       6505                                                         #2725      :
  : XATCS    I         I
  :  H096.3  I         I
2 +---]/[---+         +
  :   M435              I
  :   6901              I
  : MEMV-3              I
  :  H080.5             I
2 +---] [-----------+
  :   M261
  :   7002
  : AUT.N        MEMB2AX     MEMB-2      MEMV-3                                                    CNDB-3     : ATC PROCESS B-3
  :  H140.0      H060.4       H080.3      H080.5                                                    H080.6     :  7003  7004  7803
3 +---] [---+---] [---+---] [---+---]/[-----------------------------------------------------------( )---+
  :   X180   I   M  4   I   M259       M261                                                         M262       :
  :    618   I   6903   I   6908       7002                                                         #2734      :
  : ZP1.N    I         I
  :  H140.4  I         I
3 +---]/[---+         +
  :   X184   I         I
  :    702   I         I
  : ZP2.N    I         I
  :  H140.5  I         I
3 +---]/[---+         +
  :   X185              I
  :    703              I
  : XATCS               I
  :  H096.3             I
3 +---]/[---+---------+
  :   M435   I
  :   6901   I
  : MDI.L    I
  :  H118.1  I
3 +---] [---+
  :   Y1C1
  :   8707
  : CNDB-3       ATCFHDME                                                                           +-------+  : ATC PROCESS B-3 TIMER
  :  H080.6      H075.1                                                                             I  T 32 I  :  7004  7005
4 +---] [-------]/[-----------------------------------------------------------------------------I K   10I--+
  :   M262       M169                                                                               I H0A4.0I  :
  :   7003       6705                                                                               +-------+  :
  : MOVZME       CNDBT                                                                              CNDB3X     : ATC PROCESS B-3 AUX
  :  H075.5      H0B4.0                                                                             H080.7     :  7005  7801 *7803
5 +---]/[---+---] [-----------------------------------------------------------------------------( )---+
  :   M173   I   T 32
  :   6807   I   7004
  : CNDB3X   I
  :  H080.7  I
5 +---] [---+
  :   M263
  :   7005
  : TLME         MARETL                                                                             CYCLE-C    : ATC C CYCLE
  :  H074.7      H08D.3                                                                             H081.0     :  7006  7007  7008  7101
6 +---] [-------] [-----------------------------------------------------------------------------( )---+  10207
  :   M167       M363                                                                               M264       :
  :   6609       2911                                                                               #2745      :
  : ZPY1.N       ZPZ1.N      CYCLE-C     TCME                                                      MEMC-1     : ATC MEMORY C-1
  :  H130.1      H130.2       H081.0      H074.0                                                    H081.1     :  7007 *7008  7102  7301
7 +---] [---+---] [---+---] [---+---] [-----------------------------------------------------------( )---+  7403  7502
  :   X101   I   X102   I   M264       M160                                                         M265       :
  :    501   I    502   I   7006       6505                                                         #2752      :
  : CNDC-1   I         I
  :  H081.2  I         I
7 +---] [---+         +
  :   M266              I
  :   7008              I
  : MEMC-1              I
  :  H081.1             I
7 +---] [-----------+
  :   M265
  :   7007
  : CYCLE-C      MEMC-1                                                                             CNDC-1     : ATC PROCESS C-1
  :  H081.0      H081.1                                                                             H081.2     :  7007  7008  7404  7802
8 +---] [-------]/[-----------------------------------------------------------------------------( )---+
  :   M264       M265                                                                               M266       :
  :   7006       7007                                                                               #2755      :
```

DRN. BY. K.MIURA	TITLE.	CONTROL.
DATE. 1.31.1986	V0C15/40	MAZATROL CAM M-2
CHK'D BY. T.HIRATA	YM2B453G	DRAWING NO.
DATE. 1.31.1986		4241681801G
APPR'D BY. N.MURASE	SEQUENCE DIAGRAM	
DATE. 1.31.1986		SHEET. 70 OF. 103

REV.	DATE.	NAME.

YAMAZAKI MAZAK CORPORATION

```
  : ZPY1.N     ZPZ1.N     CYCLE-C    TCME                                                    MEMC-2    : ATC MEMORY C-2
  : H130.1     H130.2     H081.0     H074.0                                                  H081.3    :  7101 *7102  7301 *7403
1 *---] [--------] [---*---] [--------] [-----------------------------------------------------( )---*    7502*10207
  :  X101       X102   I   M264       M160                                                    M267      :
  :   501        502   I   7006       6505                                                    #2761     :
  : MEMC-2             I                                                                                :
  : H081.3             I                                                                                :
1 *---] [-------------*                                                                                *
  :  M267                                                                                              :
  :  7101                                                                                              :
  : MEMC-1     MEMC-2                                                                                  CNDC-2    : ATC PROCESS C-2
  : H081.1     H081.3                                                                                  H081.4    :  7102  7701
2 *---] [--------]/[-----------------------------------------------------------------------------( )---*
  :  M265      -M267                                                                                   M268      :
  :  7007       7101                                                                                   #2764     :
  : MGC.M      MGCORS     MGCCRS     AL71       AL74                                                  MGCOX     : MAGAZINE COVER OPEN AUX
  : H044.6     H00A.2     H00A.3     H0C8.7     H0C9.2                                                H074.3    :  5902  7103  7106  7111
3 *---]/[--------] [--------]/[--------]/[--------]/[-----------------------------------------------( )---*    7207  7303  7305
  :  Y026       X052       X053       F 71       F 74                                                  M163      :
  :  2906        403        404       5804       5808                                                  #2770     :
  : MEMA-2     MEMA-1     ZPY1.N     ZPZ2.N     TSO        TO                                         CYCLE-D   : ATC D CYCLE
  : H077.3     H077.1     H130.1     H131.2     H074.4     H074.5                                     H081.7    :  5902  7104  7105  7106
4 *---] [--------] [---*---] [--------] [--------]/[--------]/[---*-------------------------------( )---*    7107  7109  7201  7203
  :  M187       M185   I   X101       X10A       M164       M165   I                                  M271      :  10208
  :  6809       6804   I    501        506       6604       6605   I                                  #2781     :
  : MEMV-3             I                                          I                                           :
  : H080.5             I                                          I                                           :
4 *---] [-------------*                                          *                                           *
  :  M261                                                         I                                           :
  :  7002                                                         I                                           :
  : CYCLE-D    TCME                                               I                                           :
  : H081.7     H074.0                                             I                                           :
4 *---] [--------] [-----------------------------------------*                                              *
  :  M271       M160                                                                                       :
  :  7104       6505                                                                                       :
  : CNDD-1     ZPY2.N     CYCLE-D    TCME                                                    MEMD-1    : ATC MEMORY D-1
  : H082.1     H131.1     H081.7     H074.0                                                  H082.0    :  3403 *5902 *6802  7105
5 *---] [--------] [---*---] [--------] [-----------------------------------------------------( )---*    *7106  7108  7404 *7502
  :  M273       X109   I   M271       M160                                                    M272      :
  :  7106        505   I   7104       6505                                                    #2787     :
  : MEMD-1             I                                                                                :
  : H082.0             I                                                                                :
5 *---] [-------------*                                                                                *
  :  M272                                                                                              :
  :  7105                                                                                              :
  : AL76       MGTDPRS    ATCSTPME   CYCLE-D    MEMD-1     SOSA       MGCOX      TSOFFT     TSOFFAL     CNDD-1    : ATC PROCESS D-1
  : H0C9.4     H000.5     H075.0     H081.7     H082.0     H06B.4     H074.3     H0B3.5     H067.5      H082.1    :  7105  7106  7310  7701
6 *---]/[--------] [--------]/[---*---] [--------]/[--------] [--------] [--------]/[-----------------( )---*
  :  F 76       X005       M168   I   M271       M272       M 92       M163       T 29       M 61        M273      :
  :  5902        106       6703   I   7104       7105       5408       7103       3305       3306        #2798     :
  : CNDD-1                        I                                                                              :
  : H082.1                        I                                                                              :
6 *---] [-----------------------*                                                                              *
  :  M273                                                                                                        :
  :  7106                                                                                                        :
  : CNDD-2     ZPZ1.N     CYCLE-D    TCME                                                    MEMD-2    : ATC MEMORY D-2
  : H082.3     H130.2     H081.7     H074.0                                                  H082.2    :  6708  6709  6801  7107
7 *---] [--------] [---*---] [--------] [-----------------------------------------------------( )---*    *7108  7110  7111 *7404
  :  M275       X102   I   M271       M160                                                    M274      :   7502
  :  7108        502   I   7104       6505                                                    #2804     :
  : MEMD-2             I                                                                                :
  : H082.2             I                                                                                :
7 *---] [-------------*                                                                                *
  :  M274                                                                                              :
  :  7107                                                                                              :
  : MEMD-1     MEMD-2     TUCCON                                                                  CNDD-2    : ATC PROCESS D-2
  : H082.0     H082.2     H068.5                                                                  H082.3    :  7107  7108  7802
8 *---] [--------]/[--------] [-----------------------------------------------------------------( )---*
  :  M272       M274       M 69                                                                    M275      :
  :  7105       7107       3404                                                                    #2808     :
  : CNDD-3     ZPZ2.N     CYCLE-D    TCME                                                    MEMD-3    : ATC MEMORY D-3
  : H082.5     H131.2     H081.7     H074.0                                                  H082.4    :  *3403  7109 *7111  7202
9 *---] [--------] [---*---] [--------] [-----------------------------------------------------( )---*    7404 *7502
  :  M277       X10A   I   M271       M160                                                    M276      :
  :  7111        506   I   7104       6505                                                    #2814     :
  : MEMD-3             I                                                                                :
  : H082.4             I                                                                                :
9 *---] [-------------*                                                                                *
  :  M276                                                                                              :
  :  7109                                                                                              :
  : TSME       MEMD-2     TCME                                                                    CNDD-3AX  : ATC PROCESS D-3 AX
  : H064.1     H082.2     H074.0                                                                  H083.7    :  7110  7111
10 *---] [--------] [---*---] [--------] [-----------------------------------------------------( )---*
  :  M 33       M274   I   M160                                                                    M287      :
  :  3303       7107   I   6505                                                                    #2819     :
  : CNDD-3AX           I                                                                                :
  : H083.7             I                                                                                :
10 *---] [-------------*                                                                                *
  :  M287                                                                                              :
  :  7110                                                                                              :
  : MEMD-2     MEMD-3     CNDD-3AX   TSOFFT     TSOFFAL    TSME       MGCOX      MOP12                  CNDD-3    : ATC PROCESS D-3
  : H082.2     H082.4     H083.7     H0B3.5     H067.5     H064.1     H074.3     H0CB.3                 H082.5    :  7109  7111  7310  7803
11 *---] [- - ---]/[--------] [--------] [--------]/[--------]/[--------] [--------]/[-----------------( )---*
  :  M274       M276       M287       T 29       M 61       M 33       M163       F 91                   M277      :
  :  7107       7109       7110       3305       3306       3303       7103       6104                   #2828     :
```

DRN. BY. K.MIURA	TITLE.	CONTROL.
DATE. 1.31.1986	VQC15/40	MAZATROL CAM M-2
CHK'D BY. T.HIRATA	YM2B453G	DRAWING NO.
DATE. 1.31.1986		4241681801G
APPR'D BY. M.MURASE	SEQUENCE DIAGRAM	
DATE. 1.31.1986		SHEET. 77 OF. 103

REV.	DATE.	NAME.

YAMAZAKI MAZAK CORPORATION

```
  : CNDD-4     ZPY1.N     CYCLE-D    TCME                                                    MEMD-4   : ATC MEMORY D-4
  :  H082.7     H130.1     H081.7     H074.0                                                  H082.6   :  *6607  7201 *7202  7204
1 +---] [--------] [---+---] [--------] [-----------------------------------------------------( )----+  *7404  7901
  :  M279       X101   I   M271       M160                                                    M278     :
  :  7202        501   I   7104       6505                                                    #2834    :
  : MEMD-4             I                                                                                :
  :  H082.6            I                                                                                :
1 +---] [------------+                                                                                +
  :  M278                                                                                              :
  :  7201                                                                                              :
  : MEMD-3     MEMD-4     TCCON                                                                   CNDD-4   : ATC PROCESS D-4
  :  H082.4     H082.6     H068.0                                                                  H082.7   :  7201  7202  7704
2 +---] [--------]/[--------] [-----------------------------------------------------------------( )----+
  :  M276       M278       M 64                                                                    M279     :
  :  7109       7201       3503                                                                    #2838    :
  : CNDD-5     ZPZ1.N     CYCLE-D    TCME                                                    MEMD-5   : ATC MEMORY D-5
  :  H085.2     H130.2     H081.7     H074.0                                                  H085.1   :  7203 *7204  7901
3 +---] [--------] [---+---] [--------] [-----------------------------------------------------( )----+
  :  M298       X102   I   M271       M160                                                    M297     :
  :  7204        502   I   7104       6505                                                    #2844    :
  : MEMD-5             I                                                                                :
  :  H085.1            I                                                                                :
3 +---] [------------+                                                                                +
  :  M297                                                                                              :
  :  7203                                                                                              :
  : MEMD-4     MEMD-5     INTF2.N    EIA.N                                                   CNDD-5   : ATC PROCESS D-5
  :  H082.6     H085.1     H141.2     H143.5                                                  H085.2   :  7203  7204  7802
4 +---] [--------]/[--------]/[---+---]/[---+-----------------------------------------------------( )----+
  :  M278       M297       X18A   I   X19D   I                                                   M298     :
  :  7201       7203        708   I    719   I                                                   #2851    :
  :                               I TLATC    I                                                            :
  :                               I  H09E.3  I                                                            :
4 +                               +---] [---+                                                            +
  :                                  M499                                                                :
  :                                  7204                                                                :
  : MEMA-2     MEMA-1     ZPY1.N     ZPZ2.N     TS0        T0                                   CYCLE-E  : ATC E CYCLE
  :  H077.3     H077.1     H130.1     H131.2     H074.4     H074.5                                H083.0   :  5902  7205  7206  7207
5 +---] [--------] [---+---] [--------] [--------]/[--------] [---+-----------------------------( )----+  7208  7210 10208
  :  M187       M185   I   X101       X10A       M164       M165   I                             M280     :
  :  6809       6804   I    501        506       6604       6605   I                             #2862    :
  : MEMV-3             I                                           I                                      :
  :  H080.5            I                                           I                                      :
5 +---] [------------+                                           +                                      +
  :  M261                                                          I                                      :
  :  7002                                                          I                                      :
  : CYCLE-E    TCME                                                I                                      :
  :  H083.0     H074.0                                             I                                      :
5 +---] [--------] [-----------------------------------------------+                                      +
  :  M280       M160                                                                                     :
  :  7205       6505                                                                                     :
  : CNDE-1     ZPY2.N     CYCLE-E    TCME                                                    MEME-1   : ATC MEMORY E-1
  :  H083.2     H131.1     H083.0     H074.0                                                  H083.1   :  3403 *5902  7206 *7207
6 +---] [--------] [---+---] [--------] [-----------------------------------------------------( )----+  7209  7404 *7502
  :  M282       X109   I   M280       M160                                                    M281     :
  :  7207        505   I   7205       6505                                                    #2868    :
  : MEME-1             I                                                                                :
  :  H083.1            I                                                                                :
6 +---] [------------+                                                                                +
  :  M281                                                                                              :
  :  7206                                                                                              :
  : AL76       MGTDPRS    ATCSTPME   CYCLE-E    MEME-1     SOSA       MGCOX      TSOFFT     TSOFFAL   CNDE-1   : ATC PROCESS E-1
  :  H0C9.4     H000.5     H075.0     H083.0     H083.1     H06B.4     H074.3     H0B3.5     H067.5    H083.2   :  7206  7207  7310  7701
7 +---]/[--------] [--------]/[---+---] [--------]/[--------] [--------] [--------] [--------]/[--------( )----+
  :  F 76       X005       M168   I   M280       M281       M 92       M163       T 29       M 61      M282     :
  :  5902        106       6703   I   7205       7206       5408       7103       3305       3306      #2879    :
  : CNDE-1                        I                                                                           :
  :  H083.2                       I                                                                           :
7 +---] [-----------------------+                                                                             +
  :  M282                                                                                                     :
  :  7207                                                                                                     :
  : CNDE-2     ZPZ1.N     CYCLE-E    TCME                                                    MEME-2   : ATC MEMORY E-2
  :  H083.4     H130.2     H083.0     H074.0                                                  H083.3   :  *3403  7208 *7209  7211
8 +---] [--------] [---+---] [--------] [-----------------------------------------------------( )----+  *7404
  :  M284       X102   I   M280       M160                                                    M283     :
  :  7209        502   I   7205       6505                                                    #2885    :
  : MEME-2             I                                                                                :
  :  H083.3            I                                                                                :
8 +---] [------------+                                                                                +
  :  M283                                                                                              :
  :  7208                                                                                              :
  : MEME-1     MEME-2     TUCCON                                                                  CNDE-2   : ATC PROCESS E-2
  :  H083.1     H083.3     H068.5                                                                  H083.4   :  7208  7209  7802
9 +---] [--------]/[--------] [-----------------------------------------------------------------( )----+
  :  M281       M283       M 69                                                                    M284     :
  :  7206       7208       3404                                                                    #2889    :
  : CNDE-3     ZPY1.N     CYCLE-E    TCME                                                    MEME-3   : ATC MEMORY E-3
  :  H083.6     H130.1     H083.0     H074.0                                                  H083.5   :  *6607  7210 *7211  7901
10 +---] [--------] [---+---] [--------] [-----------------------------------------------------( )----+
  :  M286       X101   I   M280       M160                                                    M285     :
  :  7211        501   I   7205       6505                                                    #2895    :
  : MEME-3             I                                                                                :
  :  H083.5            I                                                                                :
10 +---] [------------+                                                                                +
  :  M285                                                                                              :
  :  7210                                                                                              :
  : MEME-2     MEME-3     TCCON                                                                   CNDE-3   : ATC PROCESS E-3
  :  H083.3     H083.5     H068.0                                                                  H083.6   :  7210  7211  7704
11 +---] [--------]/[--------] [-----------------------------------------------------------------( )----+
  :  M283       M285       M 64                                                                    M286     :
  :  7208       7210       3503                                                                    #2899    :
```

				DRN. BY. K.MIURA	TITLE.	CONTROL.
				DATE. 1.31.1986	VQC15/40	MAZATROL CAM M-2
				CHK'D BY. T.HIRATA	YM2B453G	DRAWING NO.
				DATE. 1.31.1986		42416818016
				APPR'D BY. M.MURASE	SEQUENCE DIAGRAM	
				DATE. 1.31.1986		SHEET. 72 OF. 103
REV.	DATE.	NAME.		YAMAZAKI MAZAK CORPORATION		

```
  : TCME        TSME        MF          SF          BF                                                  ENMCH     : ENABLE MODE CHANGE
  :  H074.0     H064.1      H079.2      H079.3      H079.5                                               H085.5   :   7401  7503  7504  8004
1 *---]/[-------]/[---------]/[---------]/[---------]/[-------------------------------------------------( )---*   8005  8006  8007  8010
  :   M160      M 33        M202        M203        M205                                                 M301     :   8101  8102
  :   6505      3303        2102        2103        2105                                                 #2973    :
  : SZS.M                                                                                              ZES2     : SPINDLE ZERO SPEED 2
  :  H000.1                                                                                             H076.1   :  #2512  7402
2 *---] [-----------------------------------------------------------------------------------------------( )---*
  :   X001                                                                                              M177     :
  :    102                                                                                              #2975    :
  : CNDA-2                                                                                             ZPAXX    : ZERO POSITION COMMAND AUXX
  :  H077.4                                                                                             H06E.7   :   7403  7404
3 *---] [---*-----------------*-----------------------------------------------------------------------( )---*
  :   M188  I   -               I                                                                       M119     :
  :   6810  I                   I                                                                       #2988    :
  : CNDB-1  I                   I                                                                                :
  :  H080.2 I                   I                                                                                :
3 *---] [---*                   *                                                                                *
  :   M258                      I                                                                                :
  :   6902                      I                                                                                :
  : AUT.N       MEMB-1      MEMB-2  I                                                                            :
  :  H140.0     H080.1      H080.3  I                                                                            :
3 *---] [---*---] [---------]/[---*                                                                                *
  :   X180  I   M257        M259    I                                                                            :
  :    618  I   6901        6908    I                                                                            :
  : XATCS   I                       I                                                                            :
  :  H096.3 I                       I                                                                            :
3 *---]/[---*                       *                                                                                *
  :   M435  I                       I                                                                            :
  :   6901  I                       I                                                                            :
  : MDI.L   I                       I                                                                            :
  :  H118.1 I                       I                                                                            :
3 *---] [---*                       *                                                                                *
  :   Y1C1  I                       I                                                                            :
  :   8707  I                       I                                                                            :
  : MEMB2AX I                       I                                                                            :
  :  H060.4 I                       I                                                                            :
3 *---] [---*                       *                                                                                *
  :   M 4                           I                                                                            :
  :   6903                          I                                                                            :
  : MEMC-1      MEMC-2              I                                                                            :
  :  H081.1     H081.3              I                                                                            :
3 *---] [-------]/[-----------------*                                                                                *
  :   M265      M267                                                                                             :
  :   7007      7101                                                                                             :
  : ZPAXX                   ZP1.N                                                                      ZPAX     : ZERO POSITION AX
  :  H06E.7                  H140.4                                                                      H085.0   :   7404  7503
4 *---] [---*-----------*---]/[-------------------------------------------------------------------------( )---*
  :   M119  I           I   X184                                                                          M296     :
  :   7403  I           I    702                                                                          #3004    :
  : CNDC-1  I           I                                                                                            :
  :  H081.2 I           I                                                                                            :
4 *---] [---*           *                                                                                            *
  :   M266              I                                                                                            :
  :   7008              I                                                                                            :
  : MEMD-1      MEMD-2  I                                                                                            :
  :  H082.0     H082.2  I                                                                                            :
4 *---] [-------]/[---*                                                                                            *
  :   M272      M274    I                                                                                            :
  :   7105      7107    I                                                                                            :
  : MEMD-3      MEMD-4  I                                                                                            :
  :  H082.4     H082.6  I                                                                                            :
4 *---] [-------]/[---*                                                                                            *
  :   M276      M278    I                                                                                            :
  :   7109      7201    I                                                                                            :
  : MEME-1      MEME-2  I                                                                                            :
  :  H083.1     H083.3  I                                                                                            :
4 *---] [-------]/[---*                                                                                            *
  :   M281      M283    I                                                                                            :
  :   7206      7208    I                                                                                            :
  : MEMF-2      MEMF-3  I                                                                                            :
  :  H084.3     H084.5  I                                                                                            :
4 *---] [-------]/[---*                                                                                            *
  :   M291      M293                                                                                                 :
  :   7304      7306                                                                                                 :
```

REV.	DATE.	NAME.	

DRN. BY. K.MIURA	TITLE.	CONTROL.
DATE. 1.31.1986	VQC15/40	MAZATROL CAM M-2
CHK'D BY. T.HIRATA	YM2B453G	DRAWING NO.
DATE. 1.31.1986		4241681801G
APPR'D BY. M.MURASE	SEQUENCE DIAGRAM	
DATE. 1.31.1986		SHEET. 74 OF. 103

YAMAZAKI MAZAK CORPORATION

```
  : AUT.N      MEMB2AX    MEMB-2     MEMV-3     MDI.L      XATCS                                          ZP2AXX    : REFELENCE 2 POINT COM. AUXX
  :  H140.0     H060.4     H080.3     H080.5     H118.1     H096.3                                          H06E.6   :  7501  7502
1 *---] [----*---] [--------] [--------]/[----*---]/[--------] [----*-------------------------------------( )----*
  :    X180  I   M  4       M259       M261  I   Y1C1       M435  I                                         M118     :
  :     618  I   6903       6908       7002  I   8707       6901  I                                         #3023    :
  : ZP1.N    I                               I                    I                                                  :
  :  H140.4  I                               I                    I                                                  :
1 *---]/[----*                               *                    *                                                  *
  :    X184  I                               I                    I                                                  :
  :     702  I                               I                    I                                                  :
  : ZP2.N    I                               I                    I                                                  :
  :  H140.5  I                               I                    I                                                  :
1 *---]/[----*                               *                    *                                                  *
  :    X185                                  I                    I                                                  :
  :     703                                  I                    I                                                  :
  : AUT.N      MEMB-1     MEMB2AX                                 I                                                  :
  :  H140.0     H080.1     H060.4                                 I                                                  :
1 *---] [--------] [--------]/[----------------*                   *                                                  *
  :    X180     M257       M  4                                   I                                                  :
  :     618     6901       6903                                   I                                                  :
  : MDI.L      MEMB-2     MEMV-3                                  I                                                  :
  :  H118.1     H080.3     H080.5                                 I                                                  :
1 *---] [----*---] [--------]/[----------------------------------*                                                  *
  :    Y1C1  I  M259       M261                                   I                                                  :
  :    8707  I  6908       7002                                   I                                                  :
  : XATCS    I                                                    I                                                  :
  :  H096.3  I                                                    I                                                  :
1 *---]/[----*                                                    *                                                  *
  :    M435                                                       I                                                  :
  :    6901                                                       I                                                  :
  : CNDA-1                                                        I                                                  :
  :  H077.2                                                       I                                                  :
1 *---] [-------------------------------------------------------*                                                  *
  :    M186                                                                                                          :
  :    6805                                                                                                          :
  : AUT.N      MEMA-1     MEMA-2     MEMD-1     MEME-1     ZP2.N                                          ZP2CDAX   : REFELENCE 2 POINT COMMAND AUX
  :  H140.0     H077.1     H077.3     H082.0     H083.1     H140.5                                          H07D.6   :  7502  7504
2 *---] [----*---] [--------] [----*---]/[--------]/[----*---]/[-------------------------------------( )----*
  :    X180  I   M185       M187  I   M272       M281  I   X185                                        M238     :
  :     618  I   6804       6809  I   7105       7206  I    703                                        #3042    :
  : ZP1.N    I MEMV-3             I                    I                                                  :
  :  H140.4  I  H080.5            I                    I                                                  :
2 *---]/[----*---] [----------*                         *                                                  *
  :    X184  I   M261                                  I                                                  :
  :     702  I   7002                                  I                                                  :
  : ZP2.N    I                                         I                                                  :
  :  H140.5  I                                         I                                                  :
2 *---]/[----*                                         *                                                  *
  :    X185                                            I                                                  :
  :     703                                            I                                                  :
  : MEMD-2     MEMD-3                                  I                                                  :
  :  H082.2     H082.4                                 I                                                  :
2 *---] [--------]/[----------------------------------*                                                  *
  :    M274       M276                                 I                                                  :
  :    7107       7109                                 I                                                  :
  : MEMC-1     MEMC-2     MEMF-1                        I                                                  :
  :  H081.1     H081.3     H084.1                       I                                                  :
2 *---] [--------] [--------]/[----------------------*                                                  *
  :    M265       M267       M289                      I                                                  :
  :    7007       7101       7302                      I                                                  :
  : ZP2AXX                                             I                                                  :
  :  H06E.6                                            I                                                  :
2 *---] [----------------------------------------------*                                                  *
  :    M118                                                                                                          :
  :    7501                                                                                                          :
  : ZP1.B      ENMCH                                                                                   ZP1.B.N   : REFELENCE 1 POINT CMD.
  :  H162.4     H085.5                                                                                  H112.4   :  7503  7703  7704  7801
3 *---] [--------] [----*-----------------------------------------------------------------------------( )----*  :  7803  7908  7909  7910
  :    X0D4       M301  I                                                                                Y194     :  8001
  :     904       7401  I                                                                                #3049    :
  : ZPAX       ATCFHDME  I                                                                                         :
  :  H085.0     H075.1  I                                                                                           :
3 *---] [--------]/[----*                                                                                           *
  :    M296       M169  I                                                                                             :
  :    7404       6705  I                                                                                             :
  : ZRNAX                I                                                                                             :
  :  H07F.1              I                                                                                             :
3 *---] [--------------*                                                                                             *
  :    M249                                                                                                          :
  :    4903                                                                                                          :
  : ZP2.B      ENMCH                                                                                   ZP2.B.N   : REFELENCE 2 POINT CMD.
  :  H162.5     H085.5                                                                                  H112.5   :  7504
4 *---] [--------] [----*-----------------------------------------------------------------------------( )----*
  :    X0D5       M301  I                                                                                Y195     :
  :     905       7401  I                                                                                #3055    :
  : ZP2CDAX    ATCFHDME  I                                                                                         :
  :  H07D.6     H075.1  I                                                                                           :
4 *---] [--------]/[----*                                                                                           *
  :    M238       M169                                                                                                :
  :    7502       6705                                                                                                :
  : TCME.M                                                                                             OTNEG.N   : SOFT OT NEGLECT NC
  :  H046.3                                                                                            H10D.2   :  7505
5 *---] [-------------------------------------------------------------------------------------------( )----*
  :    Y033                                                                                                Y16A     :
  :    6601                                                                                                #3057    :
```

DRN. BY. K.MIURA	TITLE.	CONTROL.
DATE. 1.31.1986	V0C15/40	MAZATROL CAM M-2
CHK'D BY. T.HIRATA	YM2B453G	DRAWING NO.
DATE. 1.31.1986		4241681801G
APPR'D BY M.MURASE	SEQUENCE DIAGRAM	
DATE. 1.31.1986		SHEET. 75 OF. 103

REV.	DATE.	NAME.

YAMAZAKI MAZAK CORPORATION

```
  : -X.B        SMZX.N      HYD.M       *ESP.M                                                  -XMEM     : -X DIRECTION MOVING MEMO
  :  H161.1      H142.0.     H044.4      H000.0                                                  H07D.0    :  7601  7604
1 +---] [--------]/[---+---] [--------] [-------------------------------------------------------(  )---+
  :   X0C9       X190   I    Y024        X000                                                    M232      :
  :    813        714   I    2302        101                                                     #3063     :
  : -XMEM             I
  :  H07D.0           I
1 +---] [-----------+
  :   M232
  :   7601
  : -Y.B        SMZY.N      HYD.M       *ESP.M                                                  -YMEM     : -Y DIRECTION MOVING MEMO
  :  H161.3      H142.1      H044.4      H000.0                                                  H07D.1    :  7602  7605
2 +---] [--------]/[---+---] [--------] [-------------------------------------------------------(  )---+
  :   X0CB       -X191  I    Y024        X000                                                    M233      :
  :    815        715   I    2302        101                                                     #3069     :
  : -YMEM             I
  :  H07D.1           I
2 +---] [-----------+
  :   M233
  :   7602
  : -Z.B        SMZZ.N      HYD.M       *ESP.M                                                  -ZMEM     : -Z DIRECTION MOVING MEMO
  :  H161.5      H142.2      H044.4      H000.0                                                  H07D.2    :  7603  7606
3 +---] [--------]/[---+---] [--------] [-------------------------------------------------------(  )---+
  :   X0CD       X192   I    Y024        X000                                                    M234      :
  :    817        716   I    2302        101                                                     #3075     :
  : -ZMEM             I
  :  H07D.2           I
3 +---] [-----------+
  :   M234
  :   7603
  : -XMEM                                                                                        +XENV     : +X DIRECTION ENABLE
  :  H07D.0                                                                                      H07D.3    :  *6103  7604  7908
4 +---] [---+-------------------------------------------------------------------------------------(  )---+
  :   M232   I                                                                                   M235      :
  :   7601   I                                                                                   #3079     :
  : OTR.B    I
  :  H160.5  I
4 +---] [---+
  :   X0C5   I
  :    811   I
  : MZP      I
  :  H065.1  I
4 +---] [---+
  :   M 41
  :   2908
  : -YMEM                                                                                        +YENV     : +Y DIRECTION ENABLE
  :  H07D.1                                                                                      H07D.4    :  *6103  7605  7703
5 +---] [---+-------------------------------------------------------------------------------------(  )---+
  :   M233   I                                                                                   M236      :
  :   7602   I                                                                                   #3083     :
  : OTR.B    I
  :  H160.5  I
5 +---] [---+
  :   X0C5   I
  :    811   I
  : MZP      I
  :  H065.1  I
5 +---] [---+
  :   M 41
  :   2908
  : -ZMEM                                                                                        +ZENV     : +Z DIRECTION ENABLE
  :  H07D.2                                                                                      H07D.5    :  *6103  7606  7901
6 +---] [---+-------------------------------------------------------------------------------------(  )---+
  :   M234   I                                                                                   M237      :
  :   7603   I                                                                                   #3087     :
  : OTR.B    I
  :  H160.5  I
6 +---] [---+
  :   X0C5   I
  :    811   I
  : MZP      I
  :  H065.1  I
6 +---] [---+
  :   M 41
  :   2908
```

DRN. BY. K.MIURA	TITLE.	CONTROL.
DATE. 1.31.1986	V9C15/40	MAZATROL CAM M-2
CHK'D BY. T.HIRATA	YM2B453G	DRAWING NO.
DATE. 1.31.1986		4241681301G
APPR'D BY. M.MURASE	SEQUENCE DIAGRAM	
DATE. 1.31.1986		SHEET. 75 OF. 103

REV.	DATE.	NAME.

YAMAZAKI MAZAK CORPORATION

```
  : CNDA-2      ZP1.N       ATCFHOME    MOP4                                                          +YAX      : +Y DIRECTION COMMAND AUX
  :  H077.4     H140.4       H075.1     H0CA.3                                                         H07D.7   :  7701  7703
1 *---] [-----*---] [-----*---]/[-------]/[-------------------------------------------------------------( )-----*
  :   M188   I   X184   I   M169       F 83                                                            M239     :
  :   6810   I    702   I   6705       6611                                                            #3099    :
  : CNDB-2   I          I                                                                                        :
  :  H080.4  I          I                                                                                        :
1 *---] [-----*          *                                                                                        *
  :   M260   I          I                                                                                        :
  :   7001   I          I                                                                                        :
  : CNDC-2   I          I                                                                                        :
  :  H081.4  I          I                                                                                        :
1 *---] [-----*          *                                                                                        *
  :   M268               I                                                                                        :
  :   7102               I                                                                                        :
  : CNDD-1      ZP2.N    I                                                                                        :
  :  H082.1     H140.5   I                                                                                        :
1 *---] [-----*---] [-----*                                                                                        *
  :   M273   I   X185                                                                                             :
  :   7106   I    703                                                                                             :
  : CNDE-1   I                                                                                                    :
  :  H083.2  I                                                                                                    :
1 *---] [-----*                                                                                                    *
  :   M282   I                                                                                                    :
  :   7207   I                                                                                                    :
  : CNDF-1   I                                                                                                    :
  :  H084.2  I                                                                                                    :
1 *---] [-----*                                                                                                    *
  :   M290                                                                                                        :
  :   7303                                                                                                        :
  : CSTBX       MLKX        TCME                                                                          MLKX      : MACHINE LOCK AUX
  :  H076.3     H08E.1       H074.0                                                                         H08E.1   :  7702 *7703 *7801 *7803
2 *---]/[-------] [-----*---] [-------------------------------------------------------------------------( )-----* *7908 *7909 *8802
  :   M179       M369   I   M160                                                                            M369     :
  :   2201       7702   I   6505                                                                            #3104    :
  : MLK.N               I                                                                                        :
  :  H108.1             I                                                                                        :
2 *---] [-------------*                                                                                            *
  :   Y141                                                                                                        :
  :   8505                                                                                                        :
  : ZP2.B       ZP2.N                  +Y.B        TCME        +YENV       MLKX                            +Y.N      : +Y DIRECTION COMMAND NC
  :  H162.5     H140.5                  H161.2      H074.0      H07D.4      H08E.1                          H111.2   :  7703
3 *---]/[-------]/[-------------*---] [-------]/[-----*---] [-----*---]/[-------------------------------( )-----*
  :   X0D5       X185              I   X0CA        M160    I   M236    I   M369                            Y18A     :
  :    905        703              I    814        6505    I   7605    I   7702                            #3119    :
  : MGCORS      SOSA        OTR.B  I                       I           I                                            :
  :  H00A.2     H06B.4      H160.5 I                       I           I                                            :
3 *---] [-------] [-------] [-----*                       *           *                                            *
  :   X052       M 92        X0C5                        I           I                                            :
  :    403       5408         811                        I           I                                            :
  : +YAX                                                  I           I                                            :
  :  H07D.7                                               I           I                                            :
3 *---] [-----------------------------------------------*           *                                            *
  :   M239                                                            I                                            :
  :   7701                                                            I                                            :
  : ZP1.B.N     -YMOP                                                 I                                            :
  :  H112.4     H07E.3                                                I                                            :
3 *---] [-------] [-----------------------------------------------*                                            *
  :   Y194       M243                                                                                            :
  :   7503       4909                                                                                            :
  : -Y.B        TCME                                                                                      -Y.N      : -Y DIRECTION COMMAND NC
  :  H161.3     H074.0                                                                                     H111.3   :  4905  4909  7704
4 *---] [-------]/[-----------------------*-----------------------*-----------------------------------( )-----*
  :   X0CB       M160                     I                       I                                       Y18B     :
  :    815       6505                     I                       I                                       #3136    :
  : CNDD-4      ZP1.N       ATCFHOME    MOP4                     I                                                :
  :  H082.7     H140.4       H075.1     H0CA.3                   I                                                :
4 *---] [-----*---] [-------]/[-------]/[-----*                 *                                                *
  :   M279   I   X184       M169       F 83                     I                                                :
  :   7202   I    702       6705       6611                     I                                                :
  : CNDE-3   I                                                   I                                                :
  :  H083.6  I                                                   I                                                :
4 *---] [-----*                                                  *                                                *
  :   M286   I                                                   I                                                :
  :   7211   I                                                   I                                                :
  : CNDF-3   I                                                   I                                                :
  :  H084.6  I                                                   I                                                :
4 *---] [-----*                                                  *                                                *
  :   M294                                                       I                                                :
  :   7307                                                       I                                                :
  : ZP1.B.N     ZRNAX       ZPZ1.N      ZPX1.N      ZPY1.N      -YMOP                                          :
  :  H112.4     H07F.1       H130.2     H130.0      H130.1      H07E.3                                         :
4 *---] [-------] [-------] [-------] [-------]/[-------]/[-----*                                                *
  :   Y194       M249        X102        X100        X101        M243                                           :
  :   7503       4903         502         420         501        4909                                           :
```

DRN. BY. K.MIURA	TITLE.	CONTROL.
DATE. 1.31.1986	VQC15/40	MAZATROL CAM M-2
CHK'D BY. T.HIRATA	YM2B453G	DRAWING NO.
DATE. 1.31.1986		4241681801G
APPR'D BY. M.MURASE	SEQUENCE DIAGRAM	
DATE. 1.31.1986		SHEET. 77 OF. 103

REV.	DATE.	NAME.

YAMAZAKI MAZAK CORPORATION

```
  : +Z.B      TCME                                          +ZENV     MLKX                                          +Z.N      : +Z DIRECTION COMMAND NC
  :   H161.4    H074.0                                        H07D.5    H08E.1                                        H111.4    :   7801
1 +---] [-------]/[-----------------------------------+---] [---+---]/[-----------------------------------( )---+
  :   X0CC      M160                                    I   M237  I   M369                                      Y18C      :
  :     816     6505                                    I   7606  I   7702                                      #3152     :
  : CNDA-1    CNDA1X     ZP2.N      ATCFHDME   MOP4     I                                                                 :
  :   H077.2    H077.5     H140.5     H075.1     H0CA.3  I                                                                 :
1 +---] [-------]/[---+---] [---+---]/[-------]/[---+                                                                     :
  :   M186      M189   I   X185  I   M169       F 83                                                                      :
  :     6805    6808   I     703  I   6705       6611                                                                      :
  : CNDB3X            I          I                                                                                         :
  :   H080.7          I          I                                                                                         :
1 +---] [-----------+          +                                                                                         :
  :   M263                       I                                                                                         :
  :     7005                     I                                                                                         :
  : +ZAX                         I                                                                                         :
  :   H07E.7                     I                                                                                         :
1 +---] [-----------------------+                                                                                         :
  :   M247                                                                                                                 :
  :     7902                                                                                                               :
  : ZP1.B.N   -ZMOP                                                                                                        :
  :   H112.4    H07E.4                                                                                                     :
1 +---] [-------] [-----------------------------------+                                                                   :
  :   Y194      M244                                                                                                       :
  :     7503    4908                                                                                                       :
  : CNDB-1    ZP1.N                                                                                       +ZAX          : +Z DIRECTION COMMAND AUX
  :   H080.2    H140.4                                                                                      H07E.7        :   7801  7802
2 +---] [---+---] [-----------------------------------------------------------------------------------------( )---+
  :   M258  I   X184                                                                                        M247          :
  :     6902  I     702                                                                                     #3160         :
  : CNDC-1    I                                                                                                            :
  :   H081.2  I                                                                                                            :
2 +---] [---+                                                                                                              :
  :   M266    I                                                                                                            :
  :     7008  I                                                                                                            :
  : CNDD-2    I                                                                                                            :
  :   H082.3  I                                                                                                            :
2 +---] [---+                                                                                                              :
  :   M275    I                                                                                                            :
  :     7108  I                                                                                                            :
  : CNDE-2    I                                                                                                            :
  :   H083.4  I                                                                                                            :
2 +---] [---+                                                                                                              :
  :   M284    I                                                                                                            :
  :     7209  I                                                                                                            :
  : CNDD-5    I                                                                                                            :
  :   H085.2  I                                                                                                            :
2 +---] [---+                                                                                                              :
  :   M298    I                                                                                                            :
  :     7204  I                                                                                                            :
  : CNDF-4    I                                                                                                            :
  :   H085.4  I                                                                                                            :
2 +---] [---+                                                                                                              :
  :   M300                                                                                                                 :
  :     7309                                                                                                               :
  : ZP1.B.N   ZRNAX      ZPZ1.N     -ZMOP                  MLKX                                                  -Z.N      : -Z DIRECTION COMMAND NC
  :   H112.4    H07F.1     H130.2     H07E.4                 H08E.1                                                H111.5    :   4904  4908  7803
3 +---] [-------] [-------]/[-------]/[---+-----------+---]/[-----------------------------------( )---+
  :   Y194      M249       X102       M244   I           I   M369                                      Y18D      :
  :     7503    4903       502        4908   I           I   7702                                      #3178     :
  : -Z.B      TCME                          I           I                                                                 :
  :   H161.5    H074.0                      I           I                                                                 :
3 +---] [-------]/[-----------------------+           +                                                                 :
  :   X0CD      M160                                    I                                                                 :
  :     817     6505                                    I                                                                 :
  : CNDB-3    CNDB3X     ZP2.N      ATCFHDME   MOP4     I                                                                 :
  :   H080.6    H080.7     H140.5     H075.1     H0CA.3  I                                                                 :
3 +---] [-------]/[---+---] [---+---]/[-------]/[---+                                                                     :
  :   M262      M263   I   X185  I   M169       F 83                                                                      :
  :     7003    7005   I     703  I   6705       6611                                                                      :
  : CNDD-3            I                                                                                                    :
  :   H082.5          I                                                                                                    :
3 +---] [---+---------+                                                                                                    :
  :   M277    I                                                                                                            :
  :     7111  I                                                                                                            :
  : CNDF-2    I                                                                                                            :
  :   H084.4  I                                                                                                            :
3 +---] [---+                                                                                                              :
  :   M292    I                                                                                                            :
  :     7305  I                                                                                                            :
  : CNDA1X    I                                                                                                            :
  :   H077.5  I                                                                                                            :
3 +---] [---+                                                                                                              :
  :   M189                                                                                                                 :
  :     6808                                                                                                               :
```

		DRN. BY. K.MIURA	TITLE.
		DATE. 1.31.1986	V9C15/40
		CHK'D BY. T.HIRATA	YM2B453G
		DATE. 1.31.1986	
		APPR'D BY. M.MURASE	SEQUENCE DIAGRAM
		DATE. 1.31.1986	
REV.	DATE.	NAME.	

CONTROL. MAZATROL CAM M-2

DRAWING NO. 4241681801G

SHEET. 79 OF. 107

YAMAZAKI MAZAK CORPORATION

```
  : MEMD-4      INTF2.N                                                                    ATCFINME  : ATC FINISH MEMORY
  :  H082.6      H141.2                                                                     H091.3  : #2203  5002  6705  7901
1 #---] [---+---] [-----------------------------------------------------------------------( )---#    8004  8005  8109#10208
  :    M278  I   X18A                                  I                                    M395  :
  :    7201  I    708                                   I                                   #3191  :
  : MEMF-3   I EIA.N       TLATC                        I                                          :
  :  H084.5  I  H143.5     H09E.3                       I                                          :
1 #---] [---+---] [-------]/[-----------------------------#                                         #
  :    M293       X19D       M499                       I                                          :
  :    7306        719       7204                       I                                          :
  : MEMD-5      INTF2.N                                 I                                          :
  :  H085.1      H141.2                                 I                                          :
1 #---] [---+---]/[---+-------------------------------#                                             #
  :    M297  I  -X18A  I                                I                                          :
  :    7203  I    708  I                                I                                          :
  : MEMF-4   I         I                                I                                          :
  :  H085.3  I         I                                I                                          :
1 #---] [---#         #                                 #                                          #
  :    M299                                            I                                          :
  :    7308                                            I                                          :
  : MEME-3                                             I                                          :
  :  H083.5                                            I                                          :
1 #---] [-----------------------------------------------#                                          #
  :    M285                                                                                       :
  :    7210                                                                                       :
  : EXRST.M     ROBOT                                                                    RST.B.N  : RESET SIGNAL B TO NC
  :  H003.6      H095.3                                                                     H110.0  :   7902
2 #---] [-------] [---+-----------------------------------------------------------------------( )---#
  :    X01E       M427  I                                                                    Y180  :
  :     211       4405  I                                                                   #3195  :
  : RST.B              I                                                                          :
  :  H160.0            I                                                                          :
2 #---] [-------------#                                                                           #
  :    X0C0                                                                                       :
  :     806                                                                                       :
  : SOVRU.B                                                                              SOVRU.N  : SPINDLE OVERRIDE UP NC
  :  H160.1                                                                                H110.1  :   7903
3 #---] [-----------------------------------------------------------------------------------( )---#
  :    X0C1                                                                                    Y181  :
  :     807                                                                                   #3197  :
  : SOVRD.B                                                                              SOVRD.N  : SPINDLE OVERRIDE DOWN NC
  :  H160.2                                                                                H110.2  :   7904
4 #---] [-----------------------------------------------------------------------------------( )---#
  :    X0C2                                                                                    Y182  :
  :     808                                                                                   #3199  :
  : FOVRU.B                                                                              FOVRU.N  : F. RATE OVERRIDE UP NC
  :  H160.3                                                                                H110.3  :   7905
5 #---] [-----------------------------------------------------------------------------------( )---#
  :    X0C3                                                                                    Y183  :
  :     809                                                                                   #3201  :
  : FOVRD.B                                                                              FOVRD.N  : F. RATE OVERRIDE DOWN NC
  :  H160.4                                                                                H110.4  :   7906
6 #---] [-----------------------------------------------------------------------------------( )---#
  :    X0C4                                                                                    Y184  :
  :     810                                                                                   #3203  :
  : OTR.B                                                                                 OTR.N  : OT RELEASE TO NC
  :  H160.5                                                                                H110.5  :   7907
7 #---] [-----------------------------------------------------------------------------------( )---#
  :    X0C5                                                                                    Y185  :
  :     811                                                                                   #3205  :
  : +X.B        TCME        +XENV                                 MLKX                       +X.N  : +X DIRECTION COMMAND NC
  :  H161.0      H074.0      H07D.3                                H08E.1                   H111.0  :   7908
8 #---] [-------]/[-------] [---+-----------------------------+---]/[-----------------------( )---#
  :    X0C8       M160        M235  I                         I   M369                      Y188  :
  :     812       6505        7604  I                         I   7702                     #3219  :
  : ZP1.B.N     -XMOP                I                         I                                  :
  :  H112.4      H07E.6              I                         I                                  :
8 #---] [-------] [-------------------#                         #                                  #
  :    Y194       M246                                         I                                  :
  :    7503       4910                                         I                                  :
  : CNDB2AX     CNDB2AXX    ZP2.N       ATCFHDME    MOP4       I                                  :
  :  H060.7      H061.1     H140.5       H075.1     H0CA.3     I                                  :
8 #---] [-------]/[-------] [-------]/[-------]/[-----------#                                     #
  :    M 7        M 9        X185        M169       F 83                                         :
  :    6904       6907        703        6705       6611                                         :
  : -X.B        TCME                                  MLKX                                  -X.N  : -X DIRECTION COMMAND NC
  :  H161.1      H074.0                                H08E.1                   H111.1  :   4906  4910  7909
9 #---] [-------]/[-----------------------------------+---]/[-----------------------( )---#
  :    X0C9       M160                                 I   M369                      Y189  :
  :     813       6505                                 I   7702                     #3234  :
  : ZP1.B.N     ZRNAX       ZPZ1.N      ZPX1.N     -XMOP      I                                  :
  :  H112.4      H07F.1     H130.2      H130.0      H07E.6    I                                  :
9 #---] [-------] [-------] [-------]/[-------]/[-----------#                                     #
  :    Y194       M249       X102        X100       M246      I                                  :
  :    7503       4903        502         420       4910      I                                  :
  : CNDB2AXX    ZP2.N       ATCFHDME    MOP4                  I                                  :
  :  H061.1      H140.5     H075.1      H0CA.3                I                                  :
9 #---] [-------] [-------]/[-------]/[-----------#                                             #
  :    M 9        X185       M169        F 83                                                   :
  :    6907        703       6705        6611                                                   :
  : +4.B        TCME        NCROTS                                                       +4.N  : +4 DIRECTION COMMAND NC
  :  H161.6      H074.0      H094.4                                                     H111.6  :   7910
10 #---] [-------]/[---+---] [-----------------------------------------------------------( )---#
  :    X0CE       M160  I   M420                                                         Y18E  :
  :     818       6505  I   2908                                                        #3241  :
  : ZP1.B.N     -4MOP     I                                                                    :
  :  H112.4      H07E.5   I                                                                    :
10 #---] [-------] [---#                                                                         #
  :    Y194       M245                                                                           :
  :    7503       4911                                                                           :
```

		DRN. BY. K.MIURA	TITLE.
		DATE. 1.31.1986	VQC15/40
		CHK'D BY. T.HIRATA	YM2B453G
		DATE. 1.31.1986	
		APPR'D BY. M.MURASE	SEQUENCE DIAGRAM
		DATE. 1.31.1986	
REV.	DATE.	NAME.	

CONTROL. MAZATROL CAM M-2

DRAWING NO. 4241681801G

SHEET. 79 OF. 103

YAMAZAKI MAZAK CORPORATION

```
  : -4.B      TCME                                                  NCROTS                          -4.N      : -4 DIRECTION COMMAND NC
  :  H161.7   H074.0                                                 H094.4                          H111.7    :  4907  4911  8001
1 *---] [-------]/[-------------------------------------------------+---] [-------------------------( )-------*
  :  X0CF     M160                                                  I  M420                         Y18F      :
  :   819     6505                                                  I  2908                         #3253     :
  : ZP1.B.N   ZRNAX     ZPX1.N    ZPY1.N    ZPZ1.N    ZP41.N    -4MOP  I
  :  H112.4   H07F.1    H130.0    H130.1    H130.2    H130.3    H07E.5 I
1 *---] [-------] [-------] [-------] [-------] [-------]/[-------]/[---*
  :  Y194     M249      X100      X101      X102      X103      M245
  :  7503     4903       420       501       502       503      4911
  : MEMB-1    XATCS                                                                                +-------+ : TOOL UNCLAMP FOOTSWITCH AUX
  :  H080.1   H096.3                                                                               I PLS   I :  8002  8004
2 *---] [-------] [-----------------------------------------------------------------------------I M 63  I-*
  :  M257     -M435                                                                              I H067.7I :
  :  6901     6901                                                                               +-------+ :
  : MEMB-2    MEMB2AX   XATCS                                                                      +-------+ : ATC STOP PB
  :  H080.3   H060.4    H096.3                                                                     I PLS   I :  8003  8004
3 *---] [-------] [-------] [-----------------------------------------------------------------------I M 50  I-*
  :  M259     M  4      M435                                                                       I H066.2I :
  :  6908     6903      6901                                                                       +-------+ :
  : AUT.B     ENMCH                                                                                AUT.B.N   : AUTO MODE NC
  :  H162.0   H085.5                                                                               H112.0    :  8004
4 *---] [-------] [---*-------*-------------------------------*-----------------------------------( )-------*
  :  X0D0     M301   I       I                               I                                     Y190      :
  :   820     7401   I       I                               I                                     #3279     :
  : AUTTCME   ATCFINME I     I                               I
  :  H077.6   H091.3 I       I                               I
4 *---] [-------] [---*       *                               *
  :  M190     M395           I                               I
  :  6504     7901           I                               I
  : AZP.N     AUTOME2   ZRNAX I                              I
  :  H102.6   H07F.0    H07F.1 I                            I
4 *---] [-------] [-------]/[---*                            *
  :  Y116     M248      M249                                I
  :  4906     4902      4903                                I
  : MEMA-1    MEMA-2    ZP1.N     ZP2.N     AUT.N     MDI.L  I
  :  H077.1   H077.3    H140.4    H140.5    H140.0    H118.1 I
4 *---] [-------] [---*---] [-------] [---*---]/[-------]/[---*
  :  M185     M187   I  X184      X185   I  X180      Y1C1
  :  6804     6809   I  702       703    I  618       8707
  : ATCSP.B          I                    I
  :  H066.2          I                    I
4 *---] [-----------*                    *
  :  M 50                                 I
  :  8003                                 I
  : TUCFSX                                I
  :  H067.7                               I
4 *---] [-----------------------------------*
  :  M 63
  :  8002
  : MDI.B     ENMCH                                                                                MDI.B.N   : MDI MODE NC
  :  H162.1   H085.5                                                                               H112.1    :  8005
5 *---] [-------] [---*-------------------------------------------------------------------------( )-------*
  :  X0D1     M301   I                                                                             Y191      :
  :   901     7401   I                                                                             #3285     :
  : MDITCME   ATCFINME I
  :  H077.7   H091.3 I
5 *---] [-------] [---*
  :  M191     M395
  :  6503     7901
  : RT.B      ENMCH                                                                                RT.B.N    : RAPID TRAVERSE NC
  :  H162.2   H085.5                                                                               H112.2    :  8006
6 *---] [-------] [-----------------------------------------------------------------------------( )-------*
  :  X0D2     M301                                                                                 Y192      :
  :   902     7401                                                                                 #3288     :
  : J.B       ENMCH                                                                                J.B.N     :
  :  H162.3   H085.5                                                                               H112.3    :  8007
7 *---] [-------] [-----------------------------------------------------------------------------( )-------*
  :  X0D3     M301                                                                                 Y193      :
  :   903     7401                                                                                 #3291     :
  : HS1.B     HS10.B    HS1.B     H4.B                                                             +-------+ :
  :  H162.6   H162.7    H162.6    H166.4                                                           I  T 53 I :  8008  8010  8101
8 *---] [-------] [---*---] [---*---] [---*-----------------------------------------------------I K    2I-*
  :  X0D6     X0D7   I  X0D6   I  X0F4                                                            I HOA6.5I :
  :   906     907    I   906   I  1006                                                             +-------+ :
  :                  I HS10.B  I
  :  H0B6.5          I  H162.7 I
8 *---] [-----------*---] [---*
  :  T 53                X0D7
  :  8008                907
  : H4.B      HS1.B     HS10.B                                                                     HSBMOP    : HANDLE&STEP PB MISS OP
  :  H166.4   H162.6    H162.7                                                                     H088.7    :  8009 *8010
9 *---] [-------] [-------] [-----------------------------------------------------------------------( )-------*
  :  X0F4     X0D6      X0D7                                                                       M327      :
  :  1006     906       907                                                                        #3304     :
  : HS1.B     HSBMOP    ENMCH                                                                      HS1.B.N   : HAND PULSE X1 NC
  :  H162.6   H088.7    H085.5                                                                     H112.6    :  8010
10 *---] [---*---]/[-------] [-----------------------------------------------------------------------( )-------*
  :  X0D6  I  M327      M301                                                                       Y196      :
  :   906  I  8009      7401                                                                       #3309     :
  :        I
  :  H0B6.5 I
10 *---] [---*
  :  T 53
  :  8008
```

	DRN. BY. K.MIURA	TITLE.	CONTROL.
	DATE. 1.31.1986	VQC15/40	MAZATROL CAM M-2
	CHK'D BY. T.HIRATA	YM2B453G	DRAWING NO.
	DATE. 1.31.1986		42416818016
	APPR'D BY. M.MURASE	SEQUENCE DIAGRAM	
	DATE. 1.31.1986		SHEET. 80 OF. 103
REV. DATE. NAME.			

YAMAZAKI MAZAK CORPORATION

```
  : HS1.L      HS10.L     H4.B       ENMCH                                                    HS10.B.N : HAND PULSE X10 NC
  :  H118.6     H118.7     H166.4     H085.5                                                   H112.7  :  8101
1 #---] [------] [------] [---+---] [-----------------------------------------------------( )---#
  :  Y1C6       Y1C7       X0F4   I   M301                                                     Y197    :
  :  8712       8713       1006   I   7401                                                     #3316   :
  : HS10.B                        I                                                                   :
  :  H162.7                       I                                                                   :
1 #---] [-----------------------#                                                                     #
  :  X0D7   I                                                                                         :
  :   907   I                                                                                         :
  :         I                                                                                         :
  :  H0B6.5 I                                                                                         :
1 #---] [---#                                                                                         #
  :  T 53                                                                                             :
  :  8008                                                                                             :
  : ZP.B       ENMCH      ZP2.B      ZP2.N                                                    ZP.B.N   : REF. 1 RETURN ALL AXIS
  :  H163.2     H085.5     H162.5     H140.5                                                   H113.2  :  8102
2 #---] [------] [------]/[------]/[-----------------------------------------------------( )---#
  :  X0DA       M301       X0D5       X185                                                     Y19A    :
  :   910       7401        905        703                                                     #3321   :
  : TPS.B      TCME                                                                            TPS.N    : TOOL PASS MODE NC
  :  H163.3     H074.0                                                                          H113.3  :  8103
3 #---] [------]/[-----------------------------------------------------------------------( )---#
  :  X0DB       M160                                                                            Y19B    :
  :   911       6505                                                                            #3324   :
  : VFC.B                                                                                       VFC.N    : VELOCITY FEED RATE CONTROL NC
  :  H163.4                                                                                     H113.4  :  8104
4 #---] [-----------------------------------------------------------------------------------( )---#
  :  X0DC                                                                                       Y19C    :
  :   912                                                                                       #3326   :
  : RDEC.B                                                                                      +-------+ : RAPID DEC. PULSE
  :  H163.6                                                                                     I PLS   I :  8105  8106  8107
5 #---] [-----------------------------------------------------------------------------------I M 51  I-#
  :  X0DE                                                                                       I H066.3I :
  :   913                                                                                       +-------+ :
  : RDECPLS    RDEC.B                                                                           RDECOF   : RAPID DEC. OFF
  :  H066.3     H066.6                                                                          H066.5  :  8106 *8107
6 #---] [------] [-----------------------------------------------------------------------( )---#
  :  M 51       M 54                                                                            M 53    :
  :  8105       8107                                                                            #3331   :
  : RDECPLS    RDECOF                                                                           RDEC.B   : RAPID DEC. PB
  :  H066.3     H066.5                                                                          H066.6  :  8106  8107  8108  8805
7 #---] [---+---]/[-----------------------------------------------------------------------( )---#
  :  M 51   I   M 53                                                                            M 54    :
  :  8105   I   8106                                                                            #3335   :
  : RDEC.B  I                                                                                           :
  :  H066.6 I                                                                                           :
7 #---] [---#                                                                                         #
  :  M 54                                                                                             :
  :  8107                                                                                             :
  : RDEC.B                                                                                      RDEC.B.N : RAPID DECELERATION NC
  :  H066.6                                                                                     H113.6  :  8108
8 #---] [-----------------------------------------------------------------------------------( )---#
  :  M 54                                                                                       Y19E    :
  :  8107                                                                                       #3337   :
  : AUT.N      ATCFINME   CSTBX      AL57       AL78       TLIFSBK    IHST.N                    ST.B.N   : CYCLE START NC
  :  H140.0     H091.3     H076.3     H0C7.1     H0C9.6     H07E.2     H14C.0                   H113.0  :  8109
9 #---] [---+---] [---+---] [---+---]/[------]/[------]/[---+---]/[-----------------------------( )---#
  :  X180   I   M395   I   M179   I   F 57       F 78       M242   I   X1E0                     Y198    :
  :   618   I   7901   I   2201   I   5601       5904       4202   I    805                     #3354   :
  : MDI.N   I          I FCST.N  I                                   I                                   :
  :  H140.1 I          I  H14A.5 I                                   I                                   :
9 #---] [---#          #---] [---#                                   #                                   #
  :  X181               I   X1D5                                      I                                   :
  :   619               I    802                                      I                                   :
  : TCME                I                                             I                                   :
  :  H074.0             I                                             I                                   :
9 #---]/[-------------#                                              #                                   #
  :  M160                                                             I                                   :
  :  6505                                                             I                                   :
  : ATCFINME   FINF       AUT.N      MDI.N                            I                                   :
  :  H091.3     H06E.5     H140.0     H140.1                           I                                   :
9 #---] [------]/[------]/[------]/[-----------------------------#                                     #
  :  M395       M117       X180       X181                                                                :
  :  7901       5002        618        619                                                                :
  : CL.B       CLAX                                                                            CLPLS    : FLOOD COOLANT PULSE
  :  H165.1     H065.5                                                                          H065.4  :  8110  8112  8113
10 #---] [------]/[-----------------------------------------------------------------------( )---#
  :  X0E9       M 45                                                                            M 44    :
  :   919       8111                                                                            #3357   :
  : CL.B                                                                                        CLAX     : FLOOD COOLANT AX
  :  H165.1                                                                                     H065.5  : *8110  8111
11 #---] [-----------------------------------------------------------------------------------( )---#
  :  X0E9                                                                                       M 45    :
  :   919                                                                                       #3359   :
  : CLPLS      CL.B.N                                                                           CLOFF    : FLOOD COOLANT OFF
  :  H065.4     H115.1                                                                          H065.6  :  8112 *8113
12 #---] [------] [-----------------------------------------------------------------------( )---#
  :  M 44       Y1A9                                                                            M 46    :
  :  8110       8113                                                                            #3362   :
  : CLPLS      CLOFF                                                                            CL.B.N   : COOLANT BUTTON TO NC
  :  H065.4     H065.6                                                                          H115.1  :  8112  8113  8201
13 #---] [---+---]/[-----------------------------------------------------------------------( )---#
  :  M 44   I   M 46                                                                            Y1A9    :
  :  8110   I   8112                                                                            #3366   :
  : CL.B.N  I                                                                                           :
  :  H115.1 I                                                                                           :
13 #---] [---#                                                                                        #
  :  Y1A9                                                                                               :
  :  8113                                                                                               :
```

DRN. BY. K.MIURA	TITLE.	CONTROL.
DATE. 1.31.1986	V9C15/40	MAZATROL CAM M-2
CHK'D BY. T.HIRATA	YM2B453G	DRAWING NO.
DATE. 1.31.1986		4241681801G
APPR'D BY. M.MURASE	SEQUENCE DIAGRAM	
DATE. 1.31.1986		SHEET. 81 OF. 103

REV.	DATE.	NAME.

YAMAZAKI MAZAK CORPORATION

```
   : CL.B.N                                                                    CL.L      : COOLANT LAMP
   :   H115.1                                                                  H11B.1    :   8201
 1 #---] [-------------------------------------------------------------------( )---#
   :   Y1A9                                                                    Y1D9      :
   :   8113                                                                    #3368     :
   : F2.B                                                                      F2.B.N    : FUNCTION KEY 2 TO NC
   :   H165.3                                                                  H115.3    :   8202  8203
 2 #---] [-------------------------------------------------------------------( )---#
   :   X0EB                                                                    Y1AB      :
   :   1001                                                                    #3370     :
   : F2.B.N                                                                    F2.L      : FUNCTION KEY 2 LAMP
   :   H115.3                                                                  H11B.3    :   8203
 3 #---] [-------------------------------------------------------------------( )---#
   :   Y1AB                                                                    Y1DB      :
   :   8202                                                                    #3372     :
   : F3.B                                                                      F3.B.N    : FUNCTION KEY 3 TO NC
   :   H165.4                                                                  H115.4    :   8204  8205
 4 #---] [-------------------------------------------------------------------( )---#
   :   X0EC                                                                    Y1AC      :
   :   1002                                                                    #3374     :
   : F3.B.N                                                                    F3.L      : FUNCTION KEY 3 LAMP
   :   H115.4                                                                  H11B.4    :   8205
 5 #---] [-------------------------------------------------------------------( )---#
   :   Y1AC                                                                    Y1DC      :
   :   8204                                                                    #3376     :
   : HX.B                                                                      HX.B.N    : HANDLE X SELECT NC
   :   H166.7                                                                  H116.0    :   8206
 6 #---] [-------------------------------------------------------------------( )---#
   :   X0F7                                                                    Y1B0      :
   :   1007                                                                    #3378     :
   : HY.B                                                                      HY.B.N    : HANDLE Y SELECT NC
   :   H166.1                                                                  H116.1    :   8207
 7 #---] [-------------------------------------------------------------------( )---#
   :   X0F1                                                                    Y1B1      :
   :   1004                                                                    #3380     :
   : HZ.B                                                                      HZ.B.N    : HANDLE Z SELECT NC
   :   H166.3                                                                  H116.2    :   8208
 8 #---] [-------------------------------------------------------------------( )---#
   :   X0F3                                                                    Y1B2      :
   :   1005                                                                    #3382     :
   : H4.B        NCROTS                                                        H4.B.N    : HANDLE 4 SELECT NC
   :   H166.4    H094.4                                                        H116.3    :   8209
 9 #---] [-------]  [-------------------------------------------------------( )---#
   :   X0F4      M420                                                          Y1B3      :
   :   1006      2908                                                          #3385     :
   : PRG.B                                                                     PRG.N     : PROGRAM END NC
   :   H166.0                                                                  H116.7    :   8210
10 #---] [-------------------------------------------------------------------( )---#
   :   X0F0                                                                    Y1B7      :
   :   1003                                                                    #3387     :
   : MA.N                                                                      +-------+ :
   :   H133.0                                                                  I MOV   I :
11 #---] [-------------------------------------------------------------------I K2X1A0I-#
   :   X118                                                                    I   D 60I :
   :   511                                                                     +-------+ :
   : MA.N          +-------+                                                   MNN2      : MENUE NO.2
   :   H133.0      I =   I                                                     H085.6    :   8212  8313  8314  8401
12 #---] [-------I K   2I-------------------------------------------------------( )---#   8402  8403  8404  8405
   :   X118        I   D 60I                                                   M302      :   8407  8501  8506
   :   511         +-------+                                                   #3396     :
   : MA.N          +-------+                                                   MNN3      : MENUE NO.3
   :   H133.0      I =   I                                                     H085.7    :   8213  8313  8314  8407
13 #---] [-------I K   3I-------------------------------------------------------( )---#   8501
   :   X118        I   D 60I                                                   M303      :
   :   511         +-------+                                                   #3401     :
   : MA.N          +-------+                                                   MNN4      : MENUE NO.4
   :   H133.0      I =   I                                                     H086.0    :   4702  4703  8214  8405
14 #---] [-------I K   4I-------------------------------------------------------( )---#   8406
   :   X118        I   D 60I                                                   M304      :
   :   511         +-------+                                                   #3406     :
   : MA.N          +-------+                                                   MNN6      : MENUE NO.6
   :   H133.0      I =   I                                                     H086.2    :   8215  8314  8401  8608
15 #---] [-------I K   6I-------------------------------------------------------( )---#   8609
   :   X118        I   D 60I                                                   M306      :
   :   511         +-------+                                                   #3411     :
   : MA.N          +-------+                                                   MNN5      : MENUE NO.5
   :   H133.0      I =   I                                                     H086.1    :   8216
16 #---] [-------I K   5I-------------------------------------------------------( )---#
   :   X118        I   D 60I                                                   M305      :
   :   511         +-------+                                                   #3416     :
   : MA.N          +-------+                                                   MNN8      : MENUE NO.8
   :   H133.0      I =   I                                                     H086.3    :   8217  8312  8313  8314
17 #---] [-------I K   8I-------------------------------------------------------( )---#   8401  8402  8403  8404
   :   X118        I   D 60I                                                   M307      :   8405  8406  8610
   :   511         +-------+                                                   #3421     :
   : MA.N                                                                      +-------+ :
   :   H133.0                                                                  I MOV   I :
18 #---] [-------------------------------------------------------------------I K2X1A8I-#
   :   X118                                                                    I   D 61I :
   :   511                                                                     +-------+ :
   : MNNT          +-------+                                                   MND1      : MENUE DATA 1
   :   H088.1      I =   I                                                     H086.7    :   8219  8610 *8611 *8612
19 #---] [-------I K   1I-------------------------------------------------------( )---#
   :   M321        I   D 61I                                                   M311      :
   :   8311        +-------+                                                   #3430     :
   : MNNT          +-------+                                                   MND2      : MENUE DATA 2
   :   H088.1      I =   I                                                     H087.0    :   8220  8407 *8610  8611
20 #---] [-------I K   2I-------------------------------------------------------( )---#   *8612
   :   M321        I   D 61I                                                   M312      :
   :   8311        +-------+                                                   #3435     :
```

DRN. BY. K.MIURA	TITLE.	CONTROL.
DATE. 1.31.1986	V9C15/40	MAZATROL CAM M-2
CHK'D BY. T.HIRATA	YM2B453G	DRAWING NO.
DATE. 1.31.1986		4241681801G
APPR'D BY M.MURASE	SEQUENCE DIAGRAM	
DATE. 1.31.1986		SHEET. 82 OF. 103

REV.	DATE.	NAME.

YAMAZAKI MAZAK CORPORATION

```
  : MNNT          +-------+                                                          MND3      : MENUE DATA 3
  :  H088.1       I =     I                                                           H087.1    :  8301  8501  8608 *8610
1 +---] [---------I K   3I-------------------------------------------------------( )---+ *8611
  :  M321         I  D 61I                                                            M313      :
  :  8311         +-------+                                                           #3440    :
  : MNNT          +-------+                                                          MND4      : MENUE DATA 4
  :  H088.1       I =     I                                                           H087.2    :  8302  8506  8609  8613
2 +---] [---------I K   4I-------------------------------------------------------( )---+ *8701 *8702
  :  M321         I  D 61I                                                            M314      :
  :  8311         +-------+                                                           #3445    :
  : MNNT          +-------+                                                          MND5      : MENUE DATA 5
  :  H088.1       I =     I                                                           H087.3    :  8303  8509 *8613  8701
3 +---] [---------I K   5I-------------------------------------------------------( )---+ *8702
  :  M321         I -D 61I                                                            M315      :
  :  8311         +-------+                                                           #3450    :
  : MNNT          +-------+                                                          MND6      : MENUE DATA 6
  :  H088.1       I =     I                                                           H087.4    :  8304  8512 *8613 *8701
4 +---] [---------I K   6I-------------------------------------------------------( )---+
  :  M321         I  D 61I                                                            M316      :
  :  8311         +-------+                                                           #3455    :
  : MNNT          +-------+                                                          MND7      : MENUE DATA 7
  :  H088.1       I =     I                                                           H087.5    :  8305  8602  8703 *8704
5 +---] [---------I K   7I-------------------------------------------------------( )---+ *8705
  :  M321         I  D 61I                                                            M317      :
  :  8311         +-------+                                                           #3460    :
  : MNNT          +-------+                                                          MND8      : MENUE DATA 8
  :  H088.1       I =     I                                                           H087.6    :  4703  8306 *8703  8704
6 +---] [---------I K   8I-------------------------------------------------------( )---+ *8705
  :  M321         I  D 61I                                                            M318      :
  :  8311         +-------+                                                           #3465    :
  : MNNT          +-------+                                                          MND9      : MENUE DATA 9
  :  H088.1       I =     I                                                           H087.7    :  4702  8307  8605 *8703
7 +---] [---------I K   9I-------------------------------------------------------( )---+ *8704
  :  M321         I  D 61I                                                            M319      :
  :  8311         +-------+                                                           #3470    :
  : MNNT3                                                                           +-------+ :
  :  H088.3                                                                         I MOV   I :
8 +---] [-------------------------------------------------------------------------I   D 60I-+
  :  M323                                                                           I K2Y148I :
  :  8309                                                                           +-------+ :
  : MNNT2                                                                           MNNT3     : MENUE TIMING 3
  :  H088.2                                                                          H088.3   :  8308  8309
9 +---] [-------------------------------------------------------------------------( )---+
  :  M322                                                                            M323      :
  :  8310                                                                            #3476    :
  : MNNT                                                                            MNNT2     : MENUE TIMING 2
  :  H088.1                                                                          H088.2   :  8309  8310  8407  8501
10 +---] [------------------------------------------------------------------------( )---+  8506  8509  8512  8602
  :  M321                                                                            M322      :  8605  8608  8609
  :  8311                                                                            #3478    :
  : MA.N          +-------+                                                         MNNT      : MENUE TIMING
  :  H133.0       I <     I                                                           H088.1   :  8219  8220  8301  8302
11 +---] [---------I K   0I-------------------------------------------------------( )---+  8303  8304  8305  8306
  :  X118         I  D 60I                                                            M321      :  8307  8310  8311
  :   511         +-------+                                                           #3483    :
  : CAUT          MNN8                                                              MEND1.L   : MENUE DATA 1 LAMP NC
  :  H08F.7        H086.3                                                            H10A.0   :  8312
12 +---] [---------] [-------------------------------------------------------------( )---+
  :  M383          M307                                                               Y150      :
  :  8610          8217                                                               #3486    :
  : LHTON         MNN2                                                              MEND2.L   : MENUE DATA 2 LAMP NC
  :  H08A.4        H085.6                                                            H10A.1   :  8313
13 +---] [---------] [---+-------------------------------------------------------( )---+
  :  M340          M302  I                                                            Y151      :
  :  8409          8212  I                                                            #3495    :
  : CMAN          MNN8   I                                                                     :
  :  H090.0        H086.3 I                                                                     :
13 +---] [---------] [---+                                                                     +
  :  M384          M307  I                                                                     :
  :  8611          8217  I                                                                     :
  : LHTON         MNN3   I                                                                     :
  :  H08A.4        H085.7 I                                                                     :
13 +---] [---------] [---+                                                                     +
  :  M340          M303                                                                        :
  :  8409          8213                                                                        :
  : MLKON         MNN2                                                              MEND3.L   : MENUE DATA 3 LAMP NC
  :  H08A.7        H085.6                                                            H10A.2   :  8314
14 +---] [---------] [---+-------------------------------------------------------( )---+
  :  M343          M302  I                                                            Y152      :
  :  8503          8212  I                                                            #3507    :
  : MLKON         MNN3   I                                                                     :
  :  H08A.7        H085.7 I                                                                     :
14 +---] [---------] [---+                                                                     +
  :  M343          M303  I                                                                     :
  :  8503          8213  I                                                                     :
  : AIN.L         MNN6   I                                                                     :
  :  H073.6        H086.2 I                                                                     :
14 +---] [---------] [---+                                                                     +
  :  M158          M306  I                                                                     :
  :  4008          8215  I                                                                     :
  : COFF          MNN8   I                                                                     :
  :  H090.1        H086.3 I                                                                     :
14 +- - ] [---------] [---+                                                                     +
  :  M385          M307                                                                        :
  :  8612          8217                                                                        :
```

		DRN. BY. K.MIURA	TITLE.
		DATE. 1.31.1986	VQC15/40
		CHK'D BY. T.HIRATA	YM2B453G
		DATE. 1.31.1986	
		APPR'D BY. M.MURASE	SEQUENCE DIAGRAM
		DATE. 1.31.1986	

CONTROL. MAZATROL CAM M-2

DRAWING NO. 4241681801G

SHEET. 83 OF. 107

REV.	DATE.	NAME.

YAMAZAKI MAZAK CORPORATION

```
  : SBKON      MNN2                                                                  MEND4.L   : MENUE DATA 4 LAMP NC
  :  H08B.2    H085.6                                                                 H10A.3   :   8401
1 +---] [--------] [---+-------------------------------------------------------------( )---+
  :   M346       M302  I                                                               Y153   :
  :   8508       8212  I                                                              #3516   :
  : AOUT.L     MNN6     I
  :  H073.5    H086.2   I
1 +---] [--------] [---+
  :   M157       M306  I
  :   4007       8215  I
  : MAUT       MNN8     I
  :  H090.2    H086.3   I
1 +---] [--------] [---+
  :   M386      -M307
  :   8613       8217
  : OSPON      MNN2                                                                  MEND5.L   : MENUE DATA 5 LAMP
  :  H08B.5    H085.6                                                                 H10A.4   :   8402
2 +---] [--------] [---+-------------------------------------------------------------( )---+
  :   M349       M302  I                                                               Y154   :
  :   8511       8212  I                                                              #3522   :
  : MMAN       MNN8     I
  :  H090.3    H086.3   I
2 +---] [--------] [---+
  :   M387       M307
  :   8701       8217
  : DRUNX      MNN2                                                                  MEND6.L   : MENUE DATA 6 LAMP
  :  H08C.0    H085.6                                                                 H10A.5   :   8403
3 +---] [--------] [---+-------------------------------------------------------------( )---+
  :   M352       M302  I                                                               Y155   :
  :   8514       8212  I                                                              #3528   :
  : MOFF       MNN8     I
  :  H090.4    H086.3   I
3 +---] [--------] [---+
  :   M388       M307
  :   8702       8217
  : TBKNGON    MNN2                                                                  MEND7.L   : MENUE DATA 7 LAMP
  :  H08C.3    H085.6                                                                 H10A.6   :   8404
4 +---] [--------] [---+-------------------------------------------------------------( )---+
  :   M355       M302  I                                                               Y156   :
  :   8604       8212  I                                                              #3534   :
  : BAUT       MNN8     I
  :  H090.5    H086.3   I
4 +---] [--------] [---+
  :   M389       M307
  :   8703       8217
  : BALON      MNN2                                                                  MEND8.L   : MENUE DATA 8 LAMP
  :  H08D.1    H085.6                                                                 H10A.7   :   8405
5 +---] [--------] [---+-------------------------------------------------------------( )---+
  :   M361       M302  I                                                               Y157   :
  :   8607       8212  I                                                              #3543   :
  : BMAN       MNN8     I
  :  H090.6    H086.3   I
5 +---] [--------] [---+
  :   M390       M307  I
  :   8704       8217  I
  : PCLCD      MNN4     I
  :  H047.5    H086.0   I
5 +---] [--------] [---+
  :   Y03D       M304
  :   4703       8214
  : BOFF       MNN8                                                                  MEND9.L   : MENUE DATA 9 LAMP
  :  H090.7    H086.3                                                                 H10B.0   :   8406
6 +---] [--------] [---+-------------------------------------------------------------( )---+
  :   M391       M307  I                                                               Y158   :
  :   8705       8217  I                                                              #3549   :
  : PUCCD      MNN4     I
  :  H047.1    H086.0   I
6 +---] [--------] [---+
  :   Y039       M304
  :   4702       8214
  : MNN2       MND2        MNNT2                                                     +------+ : WORK LIGHT PULSE
  :  H085.6    H087.0      H088.2                                                    I PLS  I :   8407  8408  8409
7 +---] [---+---] [--------] [-----------------------------------------------------I M338 I-+
  :   M302  I   M312        M322                                                    I H08A.2I :
  :   8212  I   8220        8310                                                    +------+ :
  : MNN3    I
  :  H085.7 I
7 +---] [---+
  :   M303
  :   8213
  : LHTPLS     LHTON                                                                 LHTOFF    : WORK LIGHT OFF
  :  H08A.2    H08A.4                                                                 H08A.3   :   8408 +8409
8 +---] [--------] [-------------------------------------------------------------( )---+
  :   M338       M340                                                                  M339   :
  :   8407       8409                                                                 #3557   :
  : LHTPLS     LHTOFF                                                                LHTON     : WORK LIGHT ON
  :  H08A.2    H08A.3                                                                 H08A.4   :   4402  8313  8408  8409
9 +---] [---+---]/[-----------------------------------------------------------------( )---+
  :   M338  I   M339                                                                  M340   :
  :   8407  I   8408                                                                 #3561   :
  : LHTON   I
  :  H08A.4 I
9 +---] [---+
  :   M340
  :   8409
```

DRN. BY. K.MIURA	TITLE.	CONTROL.
DATE. 1.31.1986	V9C15/40	MAZATROL CAM M-2
CHK'D BY. T.HIRATA	YM2B453G	DRAWING NO.
DATE. 1.31.1986		4241681801G
APPR'D BY. M.MURASE	SEQUENCE DIAGRAM	
DATE. 1.31.1986		SHEET. 84 OF. 103

REV.	DATE.	NAME.

YAMAZAKI MAZAK CORPORATION

```
  : MNN2      MND3      MNNT2                                                  +-------> : MACHINE LOCK PULSE
  :  H085.6    H087.1    H088.2                                                I PLS   I :   8501  8502  8503
1 *---] [----+---] [-------] [-------------------------------------------------I M341  I-*
  :   M302  I   M313      M322                                                 I H08A.5I :
  :   8212  I   8301      8310                                                 +-------> :
  : MNN3    I                                                                            :
  :  H085.7 I                                                                            :
1 *---] [----*                                                                           *
  :   M303                                                                               :
  :   8213                                                                               :
  : MLKPLS    MLKON                                                            ALSBK    : ALARM SINGLE BLOCK
  :  H08A.5    H08A.7                                                           H08A.6 :   8502 #8503
2 *---] [-------] [-------------------------------------------------------------( )----*
  :   M341     -M343                                                             M342  :
  :   8501      8503                                                            #3569  :
  : MLKPLS    ALSBK                                                            MLKON    : MACHINE LOCK ON
  :  H08A.5    H08A.6                                                           H08A.7 :   8314  8502  8503 #8504
3 *---] [----+---]/[-------------------------------------------------------------( )----*   8505
  :   M341  I   M342                                                             M343  :
  :   8501  I   8502                                                            #3573  :
  : MLKON   I                                                                            :
  :  H08A.7 I                                                                            :
3 *---] [----*                                                                           *
  :   M343                                                                               :
  :   8503                                                                               :
  : MLKON     TCME                                                             MLTCME   : MACHINE LOCK&TOOL CHANGE MEMO.
  :  H08A.7    H074.0                                                           H08E.0 :   8504 #8505
4 *---]/[----+---] [-------------------------------------------------------------( )----*
  :   M343  I   M160                                                             M368  :
  :   8503  I   6505                                                            #3577  :
  : MLTCME  I                                                                            :
  :  H08E.0 I                                                                            :
4 *---] [----*                                                                           *
  :   M368                                                                               :
  :   8504                                                                               :
  : MLKON     MLTCME                                                           MLK.N    : MACHINE LOCK NC
  :  H08A.7    H08E.0                                                           H108.1 :   7702  8505
5 *---] [-------]/[-------------------------------------------------------------( )----*
  :   M343      M368                                                             Y141  :
  :   8503      8504                                                            #3580  :
  : MNN2      MND4      MNNT2                                                  +-------> : SINGLE BLOCK PULSE
  :  H085.6    H087.2    H088.2                                                I PLS   I :   8506  8507  8508
6 *---] [-------] [-------] [-------------------------------------------------I M344  I-*
  :   M302      M314      M322                                                 I H08B.0I :
  :   8212      8302      8310                                                 +-------> :
  : SBKPLS    SBKON                                                            SBKOFF   : SINGLE BLOCK OFF
  :  H08B.0    H08B.2                                                           H08B.1 :   8507 #8508
7 *---] [-------] [-------------------------------------------------------------( )----*
  :   M344      M346                                                             M345  :
  :   8506      8508                                                            #3587  :
  : SBKPLS    SBKOFF                                                           SBKON    : SINGLE BLOCK ON
  :  H08B.0    H08B.1                                                           H08B.2 :   2301  8401  8507  8508
8 *---] [----+---]/[-------------------------------------------------------------( )----*
  :   M344  I   M345                                                             M346  :
  :   8506  I   8507                                                            #3591  :
  : SBKON   I                                                                            :
  :  H08B.2 I                                                                            :
8 *---] [----*                                                                           *
  :   M346                                                                               :
  :   8508                                                                               :
  : MNN2      MND5      MNNT2                                                  +-------> : OPTIONAL STOP PULSE
  :  H085.6    H087.3    H088.2                                                I PLS   I :   8509  8510  8511
9 *---] [-------] [-------] [-------------------------------------------------I M347  I-*
  :   M302      M315      M322                                                 I H08B.3I :
  :   8212      8303      8310                                                 +-------> :
  : OSPPLS    OSPON                                                            OSPOFF   : OPTIONAL STOP OFF
  :  H08B.3    H08B.5                                                           H08B.4 :   8510 #8511
10 *---] [-------] [-------------------------------------------------------------( )----*
  :   M347      M349                                                             M348  :
  :   8509      8511                                                            #3598  :
  : OSPPLS    OSPOFF                                                           OSPON    : OPTIONAL STOP ON
  :  H08B.3    H08B.4                                                           H08B.5 :   2204  4405  8402  8510
11 *---] [----+---]/[-------------------------------------------------------------( )----*   8511
  :   M347  I   M348                                                             M349  :
  :   8509  I   8510                                                            #3602  :
  : OSPON   I                                                                            :
  :  H08B.5 I                                                                            :
11 *---] [----*                                                                          *
  :   M349                                                                               :
  :   8511                                                                               :
  : MNN2      MND6      MNNT2                                                  +-------> : DRY RUN PULSE
  :  H085.6    H087.4    H088.2                                                I PLS   I :   8512  8513  8514
12 *---] [-------] [-------] [-------------------------------------------------I M350  I-*
  :   M302      M316      M322                                                 I H08B.6I :
  :   8212      8304      8310                                                 +-------> :
  : DRPLS     DRUNX                                                            DROFF    : DRY RUN OFF
  :  H08B.6    H08C.0                                                           H08B.7 :   8513 #8514
13 *---] [-------] [-------------------------------------------------------------( )----*
  :   M350      M352                                                             M351  :
  :   8512      8514                                                            #3609  :
  : DRPLS     DROFF                                                            DRUNX    : DRY RUN AUX.
  :  H08B.6    H08B.7                                                           H08C.0 :   8403  8513  8514  8601
14 *---] [----+---]/[-------------------------------------------------------------( )----*
  :   M350  I   M351                                                             M352  :
  :   8512  I   8513                                                            #3613  :
  : DRUNX   I                                                                            :
  :  H08C.0 I                                                                            :
14 *---] [----*                                                                          *
  :   M352                                                                               :
  :   8514                                                                               :
```

		DRN. BY. K.MIURA	TITLE.
		DATE. 1.31.1986	VQC15/40
		CHK'D BY. T.HIRATA	YM2B453G
		DATE. 1.31.1986	
		APPR'D BY. M.MURASE	SEQUENCE DIAGRAM
		DATE. 1.31.1986	
REV.	DATE.	NAME.	

CONTROL. MAZATROL CAM M-2

DRAWING NO. 42416818016

SHEET. 85 OF. 103

YAMAZAKI MAZAK CORPORATION

```
  : DRUNX                                                                                  DRN.N    : DRY RUN NC
  :   H08C.0                                                                                H108.2  :   8601
1 #---] [-------------------------------------------------------------------------------( )---#
  :   M352                                                                                  Y142    :
  :   8514                                                                                 #3615    :
  : MNN2        MND7        MNNT2                                                          +-------+ :
  :   H085.6      H087.5      H088.2                                                       I PLS   I :   8602 8603 8604
2 #---] [-------]/[-------] [-------------------------------------------------------------I M353  I-#
  :   M302        M317        M322                                                         I H08C.1I :
  :   8212        8305        8310                                                         +-------+ :
  :               TBKNGON                                                                  TBKNGOFF : TOOL BREAKAGE OFF
  :   H08C.1      H08C.3                                                                    H08C.2  :   8603 #8604
3 #---] [-------] [-------------------------------------------------------------------------( )---#
  :   M353        M355                                                                      M354    :
  :   8602        8604                                                                     #3622    :
  :               TBKNGOFF    *RST                                                         TBKNGON  : TOOL BREAKAGE ON
  :   H08C.1      H08C.2      H060.0                                                        H08C.3  :   8404 8603 8604
4 #---] [---+---]/[-------] [-------------------------------------------------------------( )---#
  :   M353  I     M354        M  0                                                          M355    :
  :   8602  I     8603        2113                                                         #3627    :
  : TBKNGON I                                                                                       :
  :   H08C.3 I                                                                                      :
4 #---] [---#                                                                                       #
  :   M355                                                                                          :
  :   8604                                                                                          :
  : MNN2        MND9        MNNT2                                                          +-------+ : BALLING PULSE
  :   H085.6      H087.7      H088.2                                                       I PLS   I :   8605 8606 8607
5 #---] [-------]/[-------] [-------------------------------------------------------------I M359  I-#
  :   M302        M319        M322                                                         I H08C.7I :
  :   8212        8307        8310                                                         +-------+ :
  : BALPLS      BALON                                                                      BALOFF   : BALLING OFF
  :   H08C.7      H08D.1                                                                    H08D.0  :   8606 #8607
6 #---] [-------] [-------------------------------------------------------------------------( )---#
  :   M359        M361                                                                      M360    :
  :   8605        8607                                                                     #3634    :
  : BALPLS      BALOFF                                                                     BALON    : BALLING ON
  :   H08C.7      H08D.0                                                                    H08D.1  :   8405 8606 8607
7 #---] [---+---]/[-------------------------------------------------------------------------( )---#
  :   M359  I     M360                                                                      M361    :
  :   8605  I     8606                                                                     #3638    :
  : BALON   I                                                                                       :
  :   H08D.1 I                                                                                      :
7 #---] [---#                                                                                       #
  :   M361                                                                                          :
  :   8607                                                                                          :
  : MNN6        MND3        MNNT2                                                          +-------+ : MEASURING ARM IN PULSE
  :   H086.2      H087.1      H088.2                                                       I PLS   I :   4006 8608
8 #---] [-------]/[-------] [-------------------------------------------------------------I M356  I-#
  :   M306        M313        M322                                                         I H08C.4I :
  :   8215        8301        8310                                                         +-------+ :
  : MNN6        MND4        MNNT2                                                          +-------+ : MEASURING ARM OUT PULSE
  :   H086.2      H087.2      H088.2                                                       I PLS   I :   4005 8609
9 #---] [-------]/[-------] [-------------------------------------------------------------I M362  I-#
  :   M306        M314        M322                                                         I H08D.2I :
  :   8215        8302        8310                                                         +-------+ :
  : MNN8        MND1        MND2        MND3        CMAN                                   CAUT     : COOLANT AUTO
  :   H086.3      H086.7      H087.0      H087.1      H090.0                                H08F.7  :   3806 8312 8610 #8611
10 #---] [-------]/[---+---]/[-------]/[---+---]/[-------------------------------------------( )---# #8612
  :   M307        M311  I     M312        M313  I     M384                                  M383    :
  :   8217        8219  I     8220        8301  I     8611                                 #3655    :
  : CAUT                I   MNN8                    I                                               :
  :   H08F.7            I   H086.3                  I                                               :
10 #---] [-------------#---]/[-------------------#                                                 #
  :   M383                    M307                                                                  :
  :   8610                    8217                                                                  :
  : MNN8        MND2        MND1        MND3        CAUT                                   CMAN     : COOLANT MANUAL
  :   H086.3      H087.0      H086.7      H087.1      H08F.7                                H090.0  :   3806 8313 #8610 8611
11 #---] [-------]/[---+---]/[-------]/[---+---]/[-------------------------------------------( )---# #8612
  :   M307        M312  I     M311        M313  I     M383                                  M384    :
  :   8217        8220  I     8219        8301  I     8610                                 #3664    :
  : CMAN                I   MNN8                    I                                               :
  :   H090.0            I   H086.3                  I                                               :
11 #---] [-------------#---]/[-------------------#                                                 #
  :   M384                    M307                                                                  :
  :   8611                    8217                                                                  :
  : MND1        MND2        CAUT        CMAN                                                   COFF     : COOLANT OFF
  :   H086.7      H087.0      H08F.7      H090.0                                                H090.1  :   8314 8612
12 #---]/[-------]/[---+---]/[-------]/[-------------------------------------------------------( )---#
  :   M311        M312  I     M383        M384                                                  M395    :
  :   8219        8220  I     8610        8611                                                 #3670    :
  : MNN8                I                                                                               :
  :   H086.3            I                                                                               :
12 #---]/[-------------#                                                                             #
  :   M307                                                                                          :
  :   8217                                                                                          :
  : MNN8        MND4        MND5        MND6        MMAN                                   MAUT     : MIST COOLANT AUTO
  :   H086.3      H087.2      H087.3      H087.4      H090.3                                H090.2  :   3810 8401 8613 #8701
13 #---] [-------]/[---+---]/[-------]/[---+---]/[-------------------------------------------( )---# #8702
  :   M307        M314  I     M315        M316  I     M387                                  M386    :
  :   8217        8302  I     8303        8304  I     8701                                 #3679    :
  : MAUT                I   MNN8                    I                                               :
  :   H090.2            I   H086.3                  I                                               :
13 #---] [-------------#---]/[-------------------#                                                 #
  :   M386                    M307                                                                  :
  :   8613                    8217                                                                  :
```

DRN. BY. K.MIURA	TITLE.	CONTROL.
DATE. 1.31.1986	V0C15/40	MAZATROL CAM M-2
CHK'D BY. T.HIRATA	YM2B453G	DRAWING NO.
DATE. 1.31.1986		4241681801G
APPR'D BY. M.MURASE	SEQUENCE DIAGRAM	
DATE. 1.31.1986		SHEET. 86 OF. 103

REV.	DATE.	NAME.

YAMAZAKI MAZAK CORPORATION

```
  : MNN8        MND5        MND4        MND6        MAUT                                          MMAN      : MIST COOLANT MANUAL
  :  H086.3     H087.3      H087.2      H087.4      H090.2                                         H090.3   :  3810  8402 *8613  8701
1 *---] [-------] [---+---]/[-------]/[---+---]/[-------------------------------------------------( )---*  *8702
  :   M307      M315  I     M314        M316  I     M386                                           M387     :
  :   8217      8303  I     8302        8304  I     8613                                           #3688    :
  : MMAN              I   MNN8                I                                                            :
  :  H090.3           I    H086.3             I                                                            :
1 *---] [-------------+---]/[-------------*                                                                 :
  :   M387                  M307                                                                           :
  :   8701                  8217                                                                           :
  : MND4        MND5        MAUT        MMAN                                                      MOFF      : MIST COOLANT OFF
  :  H087.2     H087.3      H090.2      H090.3                                                     H090.4   :  8403  8702
2 *---]/[-------]/[---+---]/[-------]/[-------------------------------------------------------( )---*
  :   M314      M315  I     M386        M387                                                       M388     :
  :   8302      8303  I     8613        8701                                                       #3694    :
  : MNN8              I                                                                                    :
  :  H086.3           I                                                                                    :
2 *---]/[-------------*                                                                                    :
  :   M307                                                                                                 :
  :   8217                                                                                                 :
  : MNN8        MND7        MND8        MND9        BMAN                                          BAUT      : WORK AIR BLAST AUTO
  :  H086.3     H087.5      H087.6      H087.7      H090.6                                         H090.5   :  3901  8404  8703 *8704
3 *---] [-------] [---+---]/[-------]/[---+---]/[-------------------------------------------------( )---*  *8705
  :   M307      M317  I     M318        M319  I     M390                                           M389     :
  :   8217      8305  I     8306        8307  I     8704                                           #3703    :
  : BAUT              I   MNN8                I                                                            :
  :  H090.5           I    H086.3             I                                                            :
3 *---] [-------------+---]/[-------------*                                                                 :
  :   M389                  M307                                                                           :
  :   8703                  8217                                                                           :
  : MNN8        MND8        MND7        MND9        BAUT                                          BMAN      : WORK AIR BLAST MANUAL
  :  H086.3     H087.6      H087.5      H087.7      H090.5                                         H090.6   :  3901  8405 *8703  8704
4 *---] [-------] [---+---]/[-------]/[---+---]/[-------------------------------------------------( )---*  *8705
  :   M307      M318  I     M317        M319  I     M389                                           M390     :
  :   8217      8306  I     8305        8307  I     8703                                           #3712    :
  : BMAN              I   MNN8                I                                                            :
  :  H090.6           I    H086.3             I                                                            :
4 *---] [-------------+---]/[-------------*                                                                 :
  :   M390                  M307                                                                           :
  :   8704.                 8217                                                                           :
  : MND7        MND8        BAUT        BMAN                                                      BOFF      : WORK AIR BLAST OFF
  :  H087.5     H087.6      H090.5      H090.6                                                     H090.7   :  8406  8705
5 *---]/[-------]/[---+---]/[-------]/[-------------------------------------------------------( )---*
  :   M317      M318  I     M389        M390                                                       M391     :
  :   8305      8306  I     8703        8704                                                       #3718    :
  : MNN8              I                                                                                    :
  :  H086.3           I                                                                                    :
5 *---]/[-------------*                                                                                    :
  :   M307                                                                                                 :
  :   8217                                                                                                 :
  : AUT.N                                                                                         AUT.L     : AUTO MODE LAMP
  :  H140.0                                                                                       H118.0   :  2114  8706
6 *---] [---*-------------------------------------------------------------------------------------( )---*
  :   X180  I                                                                                     Y1C0     :
  :    618  I                                                                                     #3721    :
  : AUTTCME I                                                                                              :
  :  H077.6 I                                                                                              :
6 *---] [---*                                                                                              :
  :   M190                                                                                                 :
  :   6504                                                                                                 :
  : MDI.N                                                                                         MDI.L     : MDI MODE LAMP
  :  H140.1                                                                                       H118.1   :  2114 *2809  4102  6901
7 *---] [---*-------------------------------------------------------------------------------------( )---*  *6904  7001  7003  7403
  :   X181  I                                                                                     Y1C1     :  *7501  7501 *8004
  :    619  I                                                                                     #3724    :
  : MDITCME I                                                                                              :
  :  H077.7 I                                                                                              :
7 *---] [---*                                                                                              :
  :   M191                                                                                                 :
  :   6503                                                                                                 :
  : RT.N                                                                                          RT.L      : RAPID TRAVERSE LAMP
  :  H140.2                                                                                       H118.2   :  8708
8 *---] [-------------------------------------------------------------------------------------( )---*
  :   X182                                                                                        Y1C2     :
  :    620                                                                                        #3726    :
  : J.N                                                                                           J.L      : JOG LAMP
  :  H140.3                                                                                       H118.3   :  8709
9 *---] [-------------------------------------------------------------------------------------( )---*
  :   X183                                                                                        Y1C3     :
  :    701                                                                                        #3728    :
  : ZP1.N       TCME                                                                              ZP1.L    : ZERO POSITION 1 LAMP
  :  H140.4     H074.0                                                                            H118.4   :  8710
10 *---] [-------]/[-------------------------------------------------------------------------( )---*
  :   X184      M160                                                                            Y1C4     :
  :    702      6505                                                                            #3731    :
  : ZP2.N       TCME                                                                              ZP2.L    : ZERO POSITION 2 LAMP
  :  H140.5     H074.0                                                                            H118.5   :  8711
11 *---] [-------]/[-------------------------------------------------------------------------( )---*
  :   X185      M160                                                                            Y1C5     :
  :    703      6505                                                                            #3734    :
  : HS1.N                                                                                         HS1.L    : HAND PULSE 1 LAMP
  :  H140.6                                                                                       H118.6   :  8101  8712
12 *---] [-------------------------------------------------------------------------------------( )---*
  :   X186                                                                                        Y1C6     :
  :    704                                                                                        #3736    :
  : HS10.N                                                                                        HS10.L   : HAND PULSE 10 LAMP
  :  H140.7                                                                                       H118.7   :  8101  8713
13 *---] [-------------------------------------------------------------------------------------( )---*
  :   X187                                                                                        Y1C7     :
  :    705                                                                                        #3738    :
```

DRN. BY. K.MIURA	TITLE.	CONTROL.
DATE. 1.31.1986	VQC15/40	MAZATROL CAM M-2
CHK'D BY. T.HIRATA	YM2B453G	DRAWING NO.
DATE. 1.31.1986		4241681801G
APPR'D BY M.MURASE	SEQUENCE DIAGRAM	
DATE. 1.31.1986		SHEET. 87 OF. 103

REV.	DATE.	NAME.

YAMAZAKI MAZAK CORPORATION

```
  : STL.N                                                                                  +-------+ :
  :  H132.1                                                                                I  T 70 I :   8801
1 +---] [-------------------------------------------------------------------------------I  K   3I-+
  :  X111                                                                                  I H0A8.6I :
  :   507                                                                                  +-------+ :
  : TCME        ATCFHOME    FINF        MLKX                                               ST.L      : CYCLE START LAMP
  :  H074.0      H075.1     H06E.5      H08E.1                                              H119.0   :   3907 #4301  4707  4807
2 +---] [-------]/[-------]/[-----+-----]/[-------------------------------------------------( )----+   5604  8802
  :  M160        M169       M117     I  M369                                                Y1C8     :
  :  6505        6705       5002     I  7702                                                #3747    :
  : STL.N                            I                                                                :
  :  H132.1                          I                                                                :
2 +---] [-----------------------------+                                                               +
  :  X111      -                                                                                      :
  :   507                                                                                             :
  : TCME        SPL.N                                                                              SP.L      : FEED HOLD LAMP
  :  H074.0      H132.2                                                                              H119.1   :   3907  4705  5604  8803
3 +---]/[-----+---] [-----+-------------------------------------------------------------------( )----+
  :  M160     I   X112    I                                                                         Y1C9     :
  :  6505     I    508    I                                                                         #3752    :
  : FINF      I           I                                                                                  :
  :  H06E.5   I           I                                                                                  :
3 +---] [-----+           +                                                                                  +
  :  M117                 I                                                                                  :
  :  5002                 I                                                                                  :
  : ATCFHOME              I                                                                                  :
  :  H075.1               I                                                                                  :
3 +---] [-----------------+                                                                                  +
  :  M169                                                                                                    :
  :  6705                                                                                                    :
  : ZP.B                                                                                             ZP.L      : ALL AXIS ZERO RETURN LAMP
  :  H163.2                                                                                           H119.2   :   8804
4 +---] [-------------------------------------------------------------------------------( )----+
  :  X0DA                                                                                  Y1CA     :
  :   910                                                                                  #3754    :
  : RDEC.B                                                                                           RDEC.L    : RAPID DECELERATION LAMP
  :  H066.6                                                                                           H119.6   :   8805
5 +---] [-------------------------------------------------------------------------------( )----+
  :  M 54                                                                                  Y1CE     :
  :  8107                                                                                  #3756    :
  : PW1.M                                                                                  +-------+ :
  :  H044.0                                                                                I MOV   I :
6 +---] [-------------------------------------------------------------------------------I K4X1F0I-+
  :  Y020                                                                                  I   D 32I :
  :  2101                                                                                  +-------+ :
  : PW1.M                                                                                  +-------+ :
  :  H044.0                                                                                I MOV   I :
7 +---] [-------------------------------------------------------------------------------I   D 32I-+
  :  Y020                                                                                  I K4Y050I :
  :  2101                                                                                  +-------+ :
  : PW1.M                                                                                  +-------+ :
  :  H044.0                                                                                I MOV   I :
8 +---] [-------------------------------------------------------------------------------I K4X0B0I-+
  :  Y020                                                                                  I   D 31I :
  :  2101                                                                                  +-------+ :
  : PW1.M                                                                                  +-------+ :
  :  H044.0                                                                                I MOV   I :
9 +---] [-------------------------------------------------------------------------------I   D 31I-+
  :  Y020                                                                                  I K4Y170I :
  :  2101                                                                                  +-------+ :
  : M21.N       MH9                                                                        +-------+ : PALLET CHANGE UNIT START
  :  H135.4      H060.6                                                                    I PLS   I :   8810  8811  8812  8813
10 +---] [-----+---] [-------------------------------------------------------------------I M448  I-+   8814  8901  8902  8903
  :  X12C     I   M 6                                                                      I H098.0I :   8904  8905  8906
  :   602     I   2308                                                                     +-------+ :
  : M22.N     I                                                                                      :
  :  H135.5   I                                                                                      :
10 +---] [-----+                                                                                     +
  :  X12D     I                                                                                      :
  :   603     I                                                                                      :
  : M24.N     I                                                                                      :
  :  H135.6   I                                                                                      :
10 +---] [-----+                                                                                     +
  :  X12E     I                                                                                      :
  :   604     I                                                                                      :
  : M28.N     I                                                                                      :
  :  H135.7   I                                                                                      :
10 +---] [-----+                                                                                     +
  :  X12F                                                                                            :
  :   605                                                                                            :
  : PCCDA                                                                                  +-------+ :
  :  H098.0                                                                                I MOV   I :
11 +---] [-------------------------------------------------------------------------------I K2X128I-+
  :  M448                                                                                  I   D 20I :
  :  8810                                                                                  +-------+ :
  : PCCDA      -                                                                           +-------+ :
  :  H098.0                                                                                I BIN   I :
12 +---] [-------------------------------------------------------------------------------I   D 20I-+
  :  M448                                                                                  I   D 21I :
  :  8810                                                                                  +-------+ :
  : PCCDA                                                                                  +-------+ :
  :  H098.0                                                                                I -     I :
13 +---] [-------------------------------------------------------------------------------I K   10I-+
  :  M448                                                                                  I   D 21I :
  :  8810                                                                                  +-------+ :
  : PCCDA                                                                                  +-------+ :
  :  H098.0                                                                                I BCD   I :
14 +---] [-------------------------------------------------------------------------------I   D 21I-+
  :  M448                                                                                  I   D 20I :
  :  8810                                                                                  +-------+ :
```

DRN. BY. K.MIURA	TITLE.	CONTROL.
DATE. 1.31.1986	VQC15/40	MAZATROL CAM M-2
CHK'D BY. T.HIRATA	YM2B453G	DRAWING NO.
DATE. 1.31.1986		4241681801G
APPR'D BY. M.MURASE	SEQUENCE DIAGRAM	
DATE. 1.31.1986		SHEET. 88 OF. 103

REV.	DATE.	NAME.

YAMAZAKI MAZAK CORPORATION

```
  : PCCDA
  :   H098.0
1 #---] [------------------------------------------------------------------------------------[ MOV  ]:
  :   M448                                                                                   [K1X104]-#
  :   8810                                                                                   [  D 24]:
  : PCCDA
  :   H098.0
2 #---] [------------------------------------------------------------------------------------[ MOV  ]:
  :   M448                                                                                   [K1X10C]-#
  :   8810                                                                                   [  D 25]:
  : PCCDA
  :   H098.0
3 #---] [------------------------------------------------------------------------------------[ MOV  ]:
  :   M448                                                                                   [  D 24]-#
  :   8810                                                                                   [K1M456]:
  : PCCDA
  :   H098.0
4 #---] [------------------------------------------------------------------------------------[ MOV  ]:
  :   M448                                                                                   [  D 25]-#
  :   8810                                                                                   [K1M460]:
  : PCCDA
  :   H098.0
5 #---] [------------------------------------------------------------------------------------[ MOV  ]:
  :   M448                                                                                   [K2M456]-#
  :   8810                                                                                   [  D 22]:
  : PCCDA                                                                                    EQPNO   : PRESET PALLET=ORDER PALLET
  :   H098.0   [ =  ]                                                                        H098.3  :   8906 #8910 #9003  9007
6 #---] [------[  D 20]------------------------------------------------------------------------( )---#
  :   M448     [  D 22]                                                                        M451  :
  :   8810                                                                                   #3819  :
  : PCUME                                                                                    TPNO    : PRESET PALLET NO.=0
  :   H098.2   [ =  ]                                                                        H098.4  :   8907  8913 #9001
7 #---] [------[K   0]------------------------------------------------------------------------( )---#
  :   M450     [  D 22]                                                                        M452  :
  :   8910                                                                                   #3824  :
  : PCUME                                                                                    POCD    : PALLET NO.0 COMMAND
  :   H098.2   [ =  ]                                                                        H098.5  :   8908  8911
8 #---] [------[K   0]------------------------------------------------------------------------( )---#
  :   M450     [  D 20]                                                                        M453  :
  :   8910                                                                                   #3829  :
  : REQ.N                                                                                    [ PLS ]: PALLET CHANGE REQUEST PLS
  :   H13B.7                                                                                 [M449 ]-#  8909  8911  8912  8913
9 #---] [------------------------------------------------------------------------------------[H098.1]:  9001  9002 #9007
  :   X15F                                                                                   PCUME   : PALLET CHANGE UNIT CYCLE
  :    613                                                                                   H098.2  :   8907  8908  8910  9104
  : EQPNO      PCCDA      *RST                                                                 9105
10 #---]/[-------] [---#---] [------------------------------------------------------------------( )---#
  :   M451     M448   I   M  0                                                                 M450  :
  :   8906     8810   I   2113                                                               #3838  :
  : PCUME      PCFIN.N  I                                                                         :
  :   H098.2   H105.7  I                                                                          :
10 #---] [-------]/[---#                                                                          #
  :   M450     Y12F                                                                               :
  :   8910     9007                                                                               :
  : PCS3       POCD       PCREQP     PCFIN.N    *RST                                        PCS6    : PALLET CHANGE STEP 6 (FIN)
  :   H09A.2   H098.5     H098.1     H105.7     H060.0                                      H09A.5  :   8911 #8912 #8913 #9001
11 #---] [-------] [---#---] [---#---]/[-------] [------------------------------------------( )---#  #9002  9007  9103  9104
  :   M466     M453   I   M449   I   Y12F       M  0                                          M469  :
  :   9001     8908   I   8909   I   9007       2113                                         #3846  :
  : PCS5              I          I                                                                 :
  :   H09A.4          I          I                                                                 :
11 #---] [----------#          #                                                                  #
  :   M468                       I                                                                 :
  :   8912                       I                                                                 :
  : PCS6                         I                                                                 :
  :   H09A.5                     I                                                                 :
11 #---] [----------------------#                                                                  #
  :   M469                                                                                         :
  :   8911                                                                                         :
  : PCS4       PCREQP     PCS6       *RST                                                    PCS5    : PALLET CHANGE STEP 5 (M61)
  :   H09A.3   H098.1     H09A.5     H060.0                                                  H09A.4  :   8911  8912 #8913  9006
12 #---] [-------] [---#---]/[-------] [------------------------------------------------------( )---#  9102
  :   M467     M449   I   M469       M  0                                                      M468  :
  :   8913     8909   I   8911       2113                                                     #3852  :
  : PCS5              I                                                                             :
  :   H09A.4          I                                                                             :
12 #---] [----------#                                                                              #
  :   M468                                                                                         :
  :   8912                                                                                         :
  : PCS2       TPNO       PCREQP     PCS5       PCS6       *RST                                PCS4    : PALLET CHANGE STEP 4 (M7*)
  :   H09A.1   H098.4     H098.1     H09A.4     H09A.5     H060.0                              H09A.3  :   8912  8913 #9001 #9002
13 #---] [-------] [---#---] [---#---]/[-------]/[-------] [------------------------------------( )---#  9006  9011
  :   M465     M452   I   M449   I   M468       M469       M  0                                  M467  :
  :   9002     8907   I   8909   I   8912       8911       2113                                 #3861  :
  : PCS3              I          I                                                                 :
  :   H09A.2          I          I                                                                 :
13 #---] [----------#          #                                                                  #
  :   M466                       I                                                                 :
  :   9001                       I                                                                 :
  : PCS4                         I                                                                 :
  :   H09A.3                     I                                                                 :
13 #---] [----------------------#                                                                  #
  :   M467                                                                                         :
  :   8913                                                                                         :
```

DRN. BY. K.MIURA	TITLE.	CONTROL.
DATE. 1.31.1986	VQC15/40	MAZATROL CAM M-2
CHK'D BY. T.HIRATA	YM2B453G	DRAWING NO.
DATE. 1.31.1986		4241681801G
APPR'D BY M.MURASE	SEQUENCE DIAGRAM	
DATE. 1.31.1986		SHEET. 89 OF 103

REV.	DATE.	NAME.

YAMAZAKI MAZAK CORPORATION

```
  : PCS2      TPNO      PCREQP    PCS4      PCS6      *RST                                          PCS3      : PALLET CHANGE STEP 3 (M62)
  :  H09A.1    H098.4    H098.1    H09A.3    H09A.5    H060.0                                        H09A.2    :  8911  8913  9001 *9002
1 *---] [--------]/[--------] [---+---]/[--------]/[--------] [-----------------------------------------( )---*   9006  9010
  :   M465      M452      M449  I   M467      M469      M  0                                            M466      :
  :   9002      8907      8909  I   8913      8911      2113                                            #3869     :
  : PCS3                        I                                                                                 :
  :  H09A.2                     I                                                                                 :
1 *---] [-----------------------+                                                                                 *
  :   M466                                                                                                        :
  :   9001                                                                                                        :
  : PCS1      PCREQP    PCS3      PCS4      PCS6      *RST                                          PCS2      : PALLET CHANGE STEP 2 (X)
  :  H09A.0    H098.1    H09A.2    H09A.3    H09A.5    H060.0                                        H09A.1    :  8913  9001  9002 *9003
2 *---] [--------] [---+---]/[--------]/[--------]/[--------] [-----------------------------------------( )---*   9004  9009
  :   M464     -M449  I   M466      M467      M469      M  0                                            M465      :
  :   9003      8909  I   9001      8913      8911      2113                                            #3877     :
  : PCS2                        I                                                                                 :
  :  H09A.1                     I                                                                                 :
2 *---] [-----------------------+                                                                                 *
  :   M465                                                                                                        :
  :   9002                                                                                                        :
  : EQPNO     PCCDA     PCS2      *RST                                                              PCS1      : PALLET CHANGE STEP 1 (Z)
  :  H098.3    H098.0    H09A.1    H060.0                                                            H09A.0    :  9002  9003  9004  9008
3 *---]/[--------] [---+---]/[--------] [-----------------------------------------------------------( )---*
  :   M451      M448  I   M465      M  0                                                              M464      :
  :   8906      8810  I   9002      2113                                                              #3883     :
  : PCS1                        I                                                                                 :
  :  H09A.0                     I                                                                                 :
3 *---] [-----------------------+                                                                                 *
  :   M464                                                                                                        :
  :   9003                                                                                                        :
  : PCS1      PCMCD.N                                                                               PCDS1.N   : DATA STATES AXIS MOVE1 NC
  :  H09A.0    H105.6                                                                                H105.0    :  9004  9005 *9006  9105
4 *---] [---+---]/[-----------------------------------------------------------------------------( )---*
  :   M464  I   Y12E                                                                                 Y128      :
  :   9003  I   9006                                                                                 #3887     :
  : PCS2        I                                                                                                 :
  :  H09A.1     I                                                                                                 :
4 *---] [---+                                                                                                     *
  :   M465                                                                                                        :
  :   9002                                                                                                        :
  : PCDS1.N                                                                                         PCDS2.N   : DATA STATES AXIS MOVE2 NC
  :  H105.0                                                                                           H105.1    :  9005 *9006  9105
5 *---] [-----------------------------------------------------------------------------------------( )---*
  :   Y128                                                                                           Y129      :
  :   #3887                                                                                          #3888     :
  : PCS3      PCDS1.N   PCDS2.N                                                                     PCMCD.N   : PALLET CHANGE M CODE COMMAND
  :  H09A.2    H105.0    H105.1                                                                      H105.6    :  *9004  9006  9105
6 *---] [---+---]/[--------]/[-----------------------------------------------------------------------( )---*
  :   M466  I   Y128      Y129                                                                       Y12E      :
  :   9001  I   9005      9005                                                                       #3894     :
  : PCS4        I                                                                                                 :
  :  H09A.3     I                                                                                                 :
6 *---] [---+                                                                                                     *
  :   M467  I                                                                                                     :
  :   8913  I                                                                                                     :
  : PCS5        I                                                                                                 :
  :  H09A.4     I                                                                                                 :
6 *---] [---+                                                                                                     *
  :   M468                                                                                                        :
  :   8912                                                                                                        :
  : PCFIN.N   PCREQP    *RST                                                                        PCFIN.N   : PALLET CHANGE CYCLE FIN
  :  H105.7    H098.1    H060.0                                                                      H105.7    :  *8910 *8911  9007 *9106
7 *---] [--------]/[---+---] [-----------------------------------------------------------------------( )---*   9106
  :   Y12F      M449  I   M  0                                                                       Y12F      :
  :   9007      8909  I   2113                                                                       #3900     :
  : EQPNO               I                                                                                         :
  :  H098.3             I                                                                                         :
7 *---] [---+-----------+                                                                                         *
  :   M451  I                                                                                                     :
  :   8906  I                                                                                                     :
  : PCS6        I                                                                                                 :
  :  H09A.5     I                                                                                                 :
7 *---] [---+                                                                                                     *
  :   M469                                                                                                        :
  :   8911                                                                                                        :
  : PCS1                                                                                            +-------+ :
  :  H09A.0                                                                                         I MOV   I :
8 *---] [-----------------------------------------------------------------------------------------I K    4I-*
  :   M464                                                                                          I   D 28I :
  :   9003                                                                                          +-------+ :
  : PCS2                                                                                            +-------+ :
  :  H09A.1                                                                                         I MOV   I :
9 *---] [-----------------------------------------------------------------------------------------I K    1I-*
  :   M465                                                                                          I   D 28I :
  :   9002                                                                                          +-------+ :
  : PCS3                                                                                            +-------+ :
  :  H09A.2                                                                                         I MOV   I :
10 *---] [----------------------------------------------------------------------------------------I K   98I-*
  :   M466                                                                                          I   D 28I :
  :   9001                                                                                          +-------+ :
  : PCS4                                                                                            +-------+ : PALLET CHANGE STEP 4 PLS
  :  H09A.3                                                                                         I PLS   I :  9011  9012
11 *---] [----------------------------------------------------------------------------------------I M454  I-*
  :   M467                                                                                          I H098.6I :
  :   8913                                                                                          +-------+ :
  : PCS4P                                                                                           +-------+ :
  :  H098.6                                                                                         I +     I :
12 *---] [----------------------------------------------------------------------------------------I K  112I-*
  :   M454                                                                                          I   D 21I :
  :   9011                                                                                          +-------+ :
```

DRN. BY. K.MIURA	TITLE.	CONTROL.
DATE. 1.31.1986	V9C15/40	MAZATROL CAM M-2
CHK'D BY. T.HIRATA	YM2B453G	DRAWING NO.
DATE. 1.31.1986		4241681801G
APPR'D BY M.MURASE	SEQUENCE DIAGRAM	
DATE. 1.31.1986		SHEET. 90 OF. 103

REV.	DATE.	NAME.

YAMAZAKI MAZAK CORPORATION

```
  : +-------+                                                                  +-------+ :
  : I +   I                                                                    I MOV   I :
1 +-I K 112I-------------------------------------------------------------------I   D 21I-+
  : I   D 21I                                                                  I   D 28I :
  : +-------+                                                                  +-------+ :
  : PCS5                                                                       +-------+ :
  :   H09A.4                                                                   I MOV   I :
2 +---] [-----------------------------------------------------------------------I K   97I-+
  :   M468                                                                     I   D 28I :
  :   8912                                                                     +-------+ :
  : PCS6                                                                       +-------+ :
  :   H09A.5                                                                   I MOV   I :
3 +---] [---+-------------------------------------------------------------------I K    0I-+
  :   M469  I                                                                  I   D 28I :
  :   8911  I                                                                  +-------+ :
  : *RST    I                                                                            :
  :   H060.0 I                                                                           :
3 +---]/[---+                                                                            *
  :   M 0                                                                                :
  :   2113                                                                               :
  : PCUME                                                                      +-------+ :
  :   H098.2                                                                   I MOV   I :
4 +---] [---+-------------------------------------------------------------------I   D 28I-+
  :   M450  I                                                                  I K3Y130I :
  :   8910  I                                                                  +-------+ :
  : PCS6    I                                                                            :
  :   H09A.5 I                                                                           :
4 +---] [---+                                                                            *
  :   M469  I                                                                            :
  :   8911  I                                                                            :
  : *RST    I                                                                            :
  :   H060.0 I                                                                           :
4 +---]/[---+                                                                            *
  :   M 0                                                                                :
  :   2113                                                                               :
  : PCDS1.N     SBK.N       STL.N       PCUME       AUT.N                      +-------+ : PC UNIT DATA STATES TIMER
  :   H105.0     H108.0      H132.1      H098.2      H140.0                    I T 56 I :   9105  9106
5 +---] [-----+---] [-------] [-----+---] [-------] [-------------------------I K   10I-+
  :   Y128  I   Y140        X111  I   M450        X180                        I H0A7.0I :
  :   9005  I   2206         507  I   8910         618                        +-------+ :
  : PCDS2.N I SBK.N             I                                                        :
  :   H105.1 I  H108.0          I                                                        :
5 +---] [-----+---]/[-----------+                                                        *
  :   Y129  I   Y140                                                                     :
  :   9005  I   2206                                                                     :
  : PCMCD.N I                                                                            :
  :   H105.6 I                                                                           :
5 +---] [---+                                                                            *
  :   Y12E                                                                               :
  :   9006                                                                               :
  : PCDST       PCFIN.N     REQ.N       *RST                          PCDSFN.N : PC DATA STATES FIN NC
  :   H0B7.0     H105.7      H13B.7      H060.0                         H108.7  :   9106
6 +---] [-------]/[-----+---]/[-------] [-------------------------------( )---+
  :   T 56      Y12F  I   X15F        M 0                             Y147    :
  :   9105      9007  I    613        2113                            #3954   :
  : PCDSFN.N          I                                                        :
  :   H108.7          I                                                        :
6 +---] [-----+-------+                                                        *
  :   Y147  I                                                                  :
  :   9106  I                                                                  :
  : PCFIN.N I                                                                  :
  :   H105.7 I                                                                 :
6 +---] [---+                                                                  *
  :   Y12F                                                                     :
  :   9007                                                                     :
  : MA.N                                                                       +-------+ :
  :   H133.0                                                                   I MOV   I :
7 +---] [---+-------------------------------------------------------------------I K 5307I-+
  :   X118  I                                                                  I   D127I :
  :   511   I                                                                  +-------+ :
  : MA.N    I                                                                            :
  :   H133.0 I                                                                           :
7 +---]/[---+                                                                            *
  :   X118                                                                               :
  :   511                                                                                :
  : MA.N                                                                       +-------+ :
  :   H133.0                                                                   I MOV   I :
8 +---] [---+-------------------------------------------------------------------I K    3I-+
  :   X118  I                                                                  I   D 50I :
  :   511   I                                                                  +-------+ :
  : MA.N    I                                                                            :
  :   H133.0 I                                                                           :
8 +---]/[---+                                                                            *
  :   X118                                                                               :
  :   511                                                                                :
  : PULL        PLDL                                                           T22ME    : T22 BCD MEMORY
  :   H08F.3     H08F.2                                                         H076.5  :   4302  4304  9109  9202
9 +---]/[-----+---]/[-----+-----------------------------------------------------( )---+
  :   M379  I   M378  I                                                         M181    :
  :   9204  I   9203  I                                                         #4102   :
  : PON1PRS I PCLL    I                                                                 :
  :   H002.4 I  H09B.2 I                                                                 :
9 +---]/[-----+---]/[-----+                                                              *
  :   X014  I   M474                                                                     :
  :   201   I   9207                                                                     :
  : PON2PRS I                                                                            :
  :   H002.5 I                                                                           :
9 +---]/[---+                                                                            *
  :   X015                                                                               :
  :   202                                                                                :
```

DRN. BY. K.MIURA	TITLE.	CONTROL.
DATE. 1.31.1986	V9C15/40	MAZATROL CAM M-2
CHK'D BY. T.HIRATA	YM2B453G	DRAWING NO.
DATE. 1.31.1986		4241681801G
APPR'D BY. M.MURASE	SEQUENCE DIAGRAM	
DATE. 1.31.1986		SHEET. 91 OF. 103

REV.	DATE.	NAME.

YAMAZAKI MAZAK CORPORATION

```
  : ZPX1.N      *RST                                                                    ZPXM     : ZERO POSITION X MEMORY
  :  H130.0     H060.0                                                                  H076.6   :   9201 *9202
1 *---] [-----*---] [-------------------------------------------------------------------( )----*
  :    X100  I    M  0                                                                   M182    :
  :     420  I    2113                                                                   #4106   :
  : ZPXM     I                                                                                   :
  :  H076.6  I                                                                                   :
1 *---] [-----*                                                                                  *
  :    M182                                                                                      :
  :    9201                                                                                      :
  : P1SL       PON1PRS    REFME      ZPXM       T22ME      AUT.M                               ZPXL     : ZERO POSITION X LIMIT
  :  H09C.4     H002.4    H072.6     H076.6     H076.5     H047.0                              H076.7   :   9202  9501  9505  9803
2 *---] [-----*---]/[-------]/[-----*---]/[-------] [-------]/[-----*-------------------------( )----*
  :    M484  I   X014       M150  I   M182       M181       Y038  I                            M183    :
  :    9209  I    201       6004  I   9201       9109       2114  I                            #4116   :
  : P2SL     I                     I                              I                                    :
  :  H09C.7  I                     I                              I                                    :
2 *---] [-----*                     *                              *                                    *
  :    M487                          I                              I                                    :
  :    9210                          I                              I                                    :
  : PULL                             I                              I                                    :
  :  H08F.3                          I                              I                                    :
2 *---]/[-----------------------------*                              *                                    *
  :    M379                                                         I                                    :
  :    9204                                                         I                                    :
  : ZPX1.N                                                          I                                    :
  :  H130.0                                                         I                                    :
2 *---] [-----------------------------------------------------------*                                    *
  :    X100                                                                                              :
  :     420                                                                                              :
  : PLPRS      PULPRS     PUL                                                             PLDL     : PALLET LOAD LIMIT
  :  H002.2     H002.3    H041.6                                                          H08F.2   :  *9109  9203 *9305  9707
3 *---] [-------]/[-------]/[-------------------------------------------------------------( )----*   9801  9803 *9902 *9903
  :    X012      X013      Y00E                                                            M378    :   9904 10003*10005
  :     119       120      9602                                                            #4120   :
  : PLPRS      PULPRS     PLD                                                             PULL     : PALLET UNLOAD LIMIT
  :  H002.2     H002.3    H041.5                                                          H08F.3   :  *9109 *9202  9204 *9401
4 *---]/[-------] [-------]/[-------------------------------------------------------------( )----*   9603  9803 *9902 *9903
  :    X012      X013      Y00D                                                            M379    :   9904*10005*10107
  :     119       120      9504                                                            #4124   :
  : PDORS      PDCPRS     PDC                                                             PDOL     : PALLET DOOR OPEN LIMIT
  :  H002.1     H002.0    H040.6                                                          H091.4   :  *5704  9205 *9401 *9403
5 *---] [-------]/[-------]/[-------------------------------------------------------------( )----*   9501  9503  9505  9601
  :    X011      X010      Y006                                                            M396    :   9603
  :     118       117     10004                                                            #4128   :
  : PDORS      PDCPRS     PDO                                                             PDCL     : PALLET DOOR CLOSE LIMIT
  :  H002.1     H002.0    H040.5                                                          H091.5   :   3805 *5704  9206 *9305
6 *---]/[-------] [-------]/[-------------------------------------------------------------( )----*  *9402
  :    X011      X010      Y005                                                            M397    :
  :     118       117     10002                                                            #4132   :
  : PCLPRS     PUCPRS     PUC                                                             PCLL     : PALLET CLAMP LIMIT
  :  H002.6     H002.7    H040.1                                                          H09B.2   :   4007  4101 *5303 *6108
7 *---] [-------]/[-------]/[-------------------------------------------------------------( )----*  *9109  9207 *9301 *9303
  :    X016      X017      Y001                                                            M474    :  *9305 *9404  9501
  :     203       204      9901                                                            #4136   :
  : PUCPRS     PCLPRS     PCL                                                             PUCL     : PALLET UNCLAMP LIMIT
  :  H002.7     H002.6    H040.0                                                          H09B.5   :  *5303  9208 *9401 *9405
8 *---] [-------]/[-------]/[-------------------------------------------------------------( )----*   9501  9505  9601  9901
  :    X017      X016      Y000                                                            M477    :  *10005
  :     204       203      9802                                                            #4140   :
  : PS1LS      PS2LS      P2S                                                             P1SL     : PALLET 1 SELECT LIMIT
  :  H001.6     H001.7    H043.2                                                          H09C.4   :   9202  9209 *9406  9501
9 *---] [-------]/[-------]/[-------------------------------------------------------------( )----*   9504  9505  9602 *9605
  :    X00E      X00F      Y01A                                                            M484    :  *9606  9701  9704
  :     115       116      9706                                                            #4144   :
  : PS1LS      PS2LS      P1S                                                             P2SL     : PALLET 2 SELECT LIMIT
  :  H001.6     H001.7    H043.1                                                          H09C.7   :   9202  9210 *9407  9501
10 *---]/[-------] [-------]/[-------------------------------------------------------------( )----*   9504  9505  9602 *9605
  :    X00E      X00F      Y019                                                            M487    :  *9606  9701  9706
  :     115       116      9704                                                            #4148   :
  : PLKRS      PULKRS     PULK                                                            PLKL     : PALLET LOCK LIMIT
  :  H00B.0     H000.4    H043.7                                                          H08A.0   :   9211 *9401  9603*10110
11 *---] [-------]/[-------]/[-------------------------------------------------------------( )----*
  :    X058      X004      Y01F                                                            M336    :
  :     405       105      9903                                                            #4152   :
  : PULKRS     PLKRS      PULK                                                            PULKL    : PALLET UNLOCK LIMIT
  :  H000.4     H00B.0    H043.7                                                          H08A.1   :   9212  9503  9601*10201
12 *---] [-------]/[-------] [-------------------------------------------------------------( )----*
  :    X004      X058      Y01F                                                            M337    :
  :     105       405      9903                                                            #4156   :
  : PCY1       ENPCSS                                                                     NEQTS    : NONEQUAL TOOL SELECT
  :  H043.3     H005.5                                                                     H065.0   :   9213  9301  9303
13 *---] [-----*---]/[-----*-------------------------------------------------------------( )----*
  :    Y01B  I   X02D  I                                                                   M 40    :
  :    9301  I    217  I                                                                   #4164   :
  : PCY2     I         I                                                                           :
  :  H043.6  I         I                                                                           :
13 *---] [-----*         *                                                                           *
  :    Y01E              I                                                                           :
  :    9303              I                                                                           :
  : PCY1       NEQTS     I                                                                           :
  :  H043.3     H065.0   I                                                                           :
13 *---]/[-----*---] [-----*                                                                           *
  :    Y01B  I   M 40                                                                                :
  :    9301  I   9213                                                                                :
  : PCY2     I                                                                                       :
  :  H043.6  I                                                                                       :
13 *---]/[-----*                                                                                     *
  :    Y01E                                                                                          :
  :    9303                                                                                          :
```

DRN. BY. K.MIURA	TITLE.	CONTROL.
DATE. 1.31.1986	VQC15/40	MAZATROL CAM M-2
CHK'D BY. T.HIRATA	YM2B453G	DRAWING NO.
DATE. 1.31.1986		4241631801G
APPR'D BY. M.MURASE	SEQUENCE DIAGRAM	
DATE. 1.31.1986		SHEET. 92 OF. 103

REV.	DATE.	NAME.

YAMAZAKI MAZAK CORPORATION

```
  : PS1LS      PCY1PB     PCY1X      PCY1PB     PCLL       ENPCSS                                          PCY1      : PALLET 1 CYCLE
  :  H001.6     H000.6     H06A.3     H000.6     H09B.2     H005.5                                           H043.3   :   9213 *9213  9301  9504
1 *---]/[---*---] [-------]/[---*---]/[---*---]/[-------] [-----------------------------------------------( )---*  9602  9703  9805*10205
  :   X00E  I   X006       M 83   I   X006   I   M474     X02D                                             Y01B     :
  :   115   I   107        9302   I   107    I   9207     217                                              #4188    :
  : PS2LS   I                      I PCY1X    I                                                                     :
  :  H001.7 I                      I  H06A.3  I                                                                     :
1 *---] [---*                      *---] [---*                                                                     *
  :   X00F  I                      I   M 83   I                                                                     :
  :   116   I                      I   9302   I                                                                     :
  : PON1PRS I                      I P1S      I                                                                     :
  :  H002.4 I                      I  H043.1  I                                                                     :
1 *---] [---*                      *---] [---*                                                                     *
  :   X014  I                      I   Y019   I                                                                     :
  :   201   I                      I   9704   I                                                                     :
  : NEQTS   I                      I          I                                                                     :
  :  H065.0 I                      I          I                                                                     :
1 *---] [---*                      *          *                                                                     *
  :   M 40                         I          I                                                                     :
  :   9213                         I          I                                                                     :
  : PCY1                           I          I                                                                     :
  :  H043.3                        I          I                                                                     :
1 *---] [-----------------------*  *          *                                                                     *
  :   Y01B                                    I                                                                     :
  :   9301                                    I                                                                     :
  : PCY1PB     PCY2PB                         I                                                                     :
  :  H000.6     H005.3                        I                                                                     :
1 *---] [-------] [-----------------------*   *                                                                     *
  :   X006      X02B                          I                                                                     :
  :   107       215                           I                                                                     :
  : ROBOT                                     I                                                                     :
  :  H095.3                                   I                                                                     :
1 *---] [-----------------------------------*  *                                                                     *
  :   M427                                                                                                           :
  :   4405                                                                                                           :
  : PCY1PB                                                                                                PCY1X     : PALLET 1 CYCLE AUX
  :  H000.6                                                                                                H06A.3   : *9301  9301  9302
2 *---] [-----------------------------------------------------------------------------------------------( )---*
  :   X006                                                                                                 M 83     :
  :   107                                                                                                  #4190    :
  : PS1LS      PCY2PB     PCY2X      PCY2PB     PCLL       ENPCSS                                          PCY2      : PALLET 2 CYCLE
  :  H001.6     H005.3     H06A.6     H005.3     H09B.2     H005.5                                           H043.6   :   9213 *9213  9303  9504
3 *---] [---*---] [-------]/[---*---]/[---*---]/[-------] [-----------------------------------------------( )---*  9602  9705  9805*10205
  :   X00E  I   X02B       M 86   I   X02B   I   M474     X02D                                             Y01E     :
  :   115   I   215        9304   I   215    I   9207     217                                              #4214    :
  : PS2LS   I                      I PCY2X    I                                                                     :
  :  H001.7 I                      I  H06A.6  I                                                                     :
3 *---]/[---*                      *---] [---*                                                                     *
  :   X00F  I                      I   M 86   I                                                                     :
  :   116   I                      I   9304   I                                                                     :
  : PON1PRS I                      I P2S      I                                                                     :
  :  H002.4 I                      I  H043.2  I                                                                     :
3 *---] [---*                      *---] [---*                                                                     *
  :   X014  I                      I   Y01A   I                                                                     :
  :   201   I                      I   9706   I                                                                     :
  : NEQTS   I                      I          I                                                                     :
  :  H065.0 I                      I          I                                                                     :
3 *---] [---*                      *          *                                                                     *
  :   M 40                         I          I                                                                     :
  :   9213                         I          I                                                                     :
  : PCY2                           I          I                                                                     :
  :  H043.6                        I          I                                                                     :
3 *---] [-----------------------*  *          *                                                                     *
  :   Y01E                                    I                                                                     :
  :   9303                                    I                                                                     :
  : PCY1PB     PCY2PB                         I                                                                     :
  :  H000.6     H005.3                        I                                                                     :
3 *---] [-------] [-----------------------*   *                                                                     *
  :   X006      X02B                          I                                                                     :
  :   107       215                           I                                                                     :
  : ROBOT                                     I                                                                     :
  :  H095.3                                   I                                                                     :
3 *---] [-----------------------------------*  *                                                                     *
  :   M427                                                                                                           :
  :   4405                                                                                                           :
  : PCY2PB                                                                                                PCY2X     : PALLET 2 CYCLE AUX
  :  H005.3                                                                                                H06A.6   : *9303  9303  9304
4 *---] [-----------------------------------------------------------------------------------------------( )---*
  :   X02B                                                                                                 M 86     :
  :   215                                                                                                  #4216    :
  : MU1        MT6        MH0        *RST                                                                  M61M      : M61 MEMORY (LOAD)
  :  H061.3     H063.2     H060.5     H060.0                                                               H07A.0   :   4004  9305  9501  9502
5 *---] [-------] [-------] [---*---] [---*-----------------------------------------------------------( )---*  9503  9801  9902 10001
  :   M 11      M 26       M  5   I   M  0                                                                 M208     : 10003 10008*10204
  :   2413      2408       2307   I   2113                                                                 #4226    :
  : PLDL       M61M                  I                                                                               :
  :  H08F.2     H07A.0                I                                                                               :
5 *---]/[---*---] [-----------------*                                                                               *
  :   M378  I   M208                                                                                                 :
  :   9203  I   9305                                                                                                 :
  : PDCL    I                                                                                                        :
  :  H091.5 I                                                                                                        :
5 *---]/[---*                                                                                                        *
  :   M397  I                                                                                                        :
  :   9206  I                                                                                                        :
  : PCLL    I                                                                                                        :
  :  H09B.2 I                                                                                                        :
5 *---]/[---*                                                                                                        *
  :   M474                                                                                                           :
  :   9207                                                                                                           :
```

DRN. BY. K.MIURA	TITLE.	CONTROL.
DATE. 1.31.1986	VQC15/40	MAZATROL CAM M-2
CHK'D BY. T.HIRATA	YM2B453G	DRAWING NO.
DATE. 1.31.1986		4241681801G
APPR'D BY M.MURASE	SEQUENCE DIAGRAM	
DATE. 1.31.1986		SHEET. 93 OF. 103

REV.	DATE.	NAME.

YAMAZAKI MAZAK CORPORATION

```
  : MU2          MT6          MHO          *RST                                                    M62M      : M62 MEMORY (UNLOAD)
  :  H061.4      H063.2       H060.5       H060.0                                                  H07A.1    :   4004  9401  9505  9506
1 *---] [--------] [--------] [---+---] [-------------------------------------------------------( )---*    :   9601  9805  9902 10001
  :   M 12        M 26         M 5   I    M 0                                                     M209      :  10101*10204 10205
  :   2414        2408         2307  I    2113                                                    #4237     :
  : PULL         M62M                I
  :  H08F.3      H07A.1              I
1 *---]/[---+---] [-------------*
  :   M379    I   M209
  :   9204    I   9401
  : PDOL         I
  :  H091.4      I
1 *---]/[---*
  :   M396    I
  :   9205    I
  : PUCL         I
  :  H09B.5      I
1 *---]/[---*
  :   M477    I
  :   9208    I
  : PLKL         I
  :  H08A.0      I
1 *---]/[---*
  :   M336
  :   9211
  : MU4          MT6          MHO          *RST                                                    M64M      : M64 MEMORY (DOOR CLOSE)
  :  H061.6      H063.2       H060.5       H060.0                                                  H07A.2    :   9402  9905 10003*10204
2 *---] [--------] [--------] [---+---] [-------------------------------------------------------( )---*    :
  :   M 14        M 26         M 5   I    M 0                                                     M210      :
  :   2416        2408         2307  I    2113                                                    #4245     :
  : PDCL         M64M                I
  :  H091.5      H07A.2              I
2 *---]/[--------] [-------------*
  :   M397        M210
  :   9206        9402
  : MU5          MT6          MHO          *RST                                                    M65M      : M65 MEMORY (DOOR OPEN)
  :  H061.7      H063.2       H060.5       H060.0                                                  H07A.3    :   9403  9905 10001*10204
3 *---] [--------] [--------] [---+---] [-------------------------------------------------------( )---*    :
  :   M 15        M 26         M 5   I    M 0                                                     M211      :
  :   2417        2408         2307  I    2113                                                    #4253     :
  : PDOL         M65M                I
  :  H091.4      H07A.3              I
3 *---]/[--------] [-------------*
  :   M396        M211
  :   9205        9403
  : MU8          MT6          MHO          *RST                                                    M68M      : M68 MEMORY (CLAMP)
  :  H062.2      H063.2       H060.5       H060.0                                                  H07A.4    :   9404  9708  9801*10204
4 *---] [--------] [--------] [---+---] [-------------------------------------------------------( )---*    :
  :   M 18        M 26         M 5   I    M 0                                                     M212      :
  :   2420        2408         2307  I    2113                                                    #4261     :
  : PCLL         M68M                I
  :  H09B.2      H07A.4              I
4 *---]/[--------] [-------------*
  :   M474        M212
  :   9207        9404
  : MU9          MT6          MHO          *RST                                                    M69M      : M69 MEMORY (UNCLAMP)
  :  H062.3      H063.2       H060.5       H060.0                                                  H07A.5    :   4004  9405  9804  9805
5 *---] [--------] [--------] [---+---] [-------------------------------------------------------( )---* *10204
  :   M 19        M 26         M 5   I    M 0                                                     M213      :
  :   2501        2408         2307  I    2113                                                    #4269     :
  : PUCL         M69M                I
  :  H09B.5      H07A.5              I
5 *---]/[--------] [-------------*
  :   M477        M213
  :   9208        9405
  : MU1          MT7          MHO          *RST                                                    M71M      : M71 MEMORY (PALLET 1 SELECT)
  :  H061.3      H063.3       H060.5       H060.0                                                  H07A.6    :   9406  9604  9605  9703
6 *---] [--------] [--------] [---+---] [-------------------------------------------------------( )---*    : 10102*10204
  :   M 11        M 27         M 5   I    M 0                                                     M214      :
  :   2413        2409         2307  I    2113                                                    #4278     :
  : P1SL         M71M                I
  :  H09C.4      H07A.6              I
6 *---]/[---+---] [-------------*
  :   M484    I   M214
  :   9209    I   9406
  : PSULK        I
  :  H045.4      I
6 *---] [---*
  :   Y02C
  :   9606
  : MU2          MT7          MHO          *RST                                                    M72M      : M72 MEMORY (PALLET 2 SELECT)
  :  H061.4      H063.3       H060.5       H060.0                                                  H07A.7    :   9407  9604  9605  9705
7 *---] [--------] [--------] [---+---] [-------------------------------------------------------( )---*    : 10103*10204
  :   M 12        M 27         M 5   I    M 0                                                     M215      :
  :   2414        2409         2307  I    2113                                                    #4287     :
  : P2SL         M72M                I
  :  H09C.7      H07A.7              I
7 *---]/[---+---] [-------------*
  :   M487    I   M215
  :   9210    I   9407
  : PSULK        I
  :  H045.4      I
7 *---] [---*
  :   Y02C
  :   9606
```

DRN. BY. K.MIURA	TITLE.	CONTROL.
DATE. 1.31.1986	VQC15/40	MAZATROL CAM M-2
CHK'D BY. T.HIRATA	YM2B453G	DRAWING NO.
DATE. 1.31.1986		42416818016
APPR'D BY. M.MURASE	SEQUENCE DIAGRAM	
DATE. 1.31.1986		SHEET. 94 OF. 103

REV.	DATE.	NAME.

YAMAZAKI MAZAK CORPORATION

```
: REFME      PCLL       PON1PRS    PDOL       AUT.M      P1SL       ZPXL                                    ENPLD      : ENABLE PALLET LOAD
:  H072.6    H09B.2     H002.4     H091.4     H047.0     H09C.4     H076.7                                  H08E.2     :  9501 #9502  9902#10001
1 #---]/[----]/[------]/[---#---] [------]/[---#---] [---#---] [-----------------------------------------( )----#
:  M150      M474       X014   I   M396       Y038   I   M484   I   M183                                    M370       :
:  6004      9207       201    I   9205       2114   I   9209   I   9202                                    #4303      :
: PUCL                           I                     I P2SL     I                                                      :
: H09B.5                         I                     I H09C.7   I                                                      :
1 #---] [-----------------------#                     #---] [---#                                                      #
:  M477                                                I   M487                                                         :
:  9208                                                I   9210                                                         :
: PON1PRS    PUCL       M61M                           I                                                                :
: H002.4     H09B.5     H07A.0                         I                                                                :
1 #---] [----] [---#---] [-----------------------#                                                                      #
:  X014      M477   I   M208                                                                                            :
:  201       9208   I   9305                                                                                            :
: ENPLD          I                                                                                                       :
: H08E.2         I                                                                                                       :
1 #---] [-------#                                                                                                        #
:  M370                                                                                                                 :
:  9501                                                                                                                 :
: PLSS       AUT.M      ENPLD                                                                                PLDMOP     : PALLET LOAD MISS OPERATION
: H009.0     H047.0     H08E.2                                                                               H08E.5     :  #4004  6003  9502 #9503
2 #---] [----]/[------]/[---#-----------------------------------------------------------------------------( )----# #10001 10006 10008
:  X048      Y038   I   M370   I                                                                                M373       :
:  318       2114   I   9501   I                                                                                #4311      :
: M61M           I          I                                                                                              :
: H07A.0         I          I                                                                                              :
2 #---] [-------#          #                                                                                              #
:  M208                     I                                                                                              :
:  9305                     I                                                                                              :
: PLDMOP     #ALRST         I                                                                                              :
: H08E.5     H06F.7         I                                                                                              :
2 #---] [----] [-----------#                                                                                              #
:  M373      M127                                                                                                         :
:  9502      5102                                                                                                         :
: PLSS       AUT.M      PULKL      PLDMOP                                                                       PLDST      : PALLET LOAD START
: H009.0     H047.0     H08A.1     H08E.5                                                                       H08E.4     :  9503  9504
3 #---] [----]/[------]/[---#---] [----]/[-----------------------------------------------------------------------( )----#
:  X048      Y038   I   M337       M373                                                                             M372       :
:  318       2114   I   9212       9502                                                                             #4319      :
: M61M           I  PDOL                                                                                                 :
: H07A.0         I  H091.4 I                                                                                              :
3 #---] [----] [----] [---#                                                                                               #
:  M208      M396                                                                                                         :
:  9305      9205                                                                                                         :
: AUT.M                     PLDST      PUL        ENPCSS                                                       PLD        : PALLET LOAD
: H047.0                    H08E.4     H041.6     H005.5                                                       H041.5     :  #9204  9504 #9602  9704
4 #---]/[-----------------#---] [----]/[------] [-----------------------------------------------------------( )----#  9706 10005 10106
:  Y038                 I  M372       Y00E       X02D                                                             Y00D       :
:  2114                 I  9503       9602       217                                                              #4330      :
: PCY1       P1SL        I                                                                                                 :
: H043.3     H09C.4      I                                                                                                 :
4 #---] [----] [---#                                                                                                      #
:  Y01B      M484        I                                                                                                 :
:  9301      9209        I                                                                                                 :
: PCY2       P2SL        I                                                                                                 :
: H043.6     H09C.7      I                                                                                                 :
4 #---] [----] [---#                                                                                                      #
:  Y01E      M487                                                                                                         :
:  9303      9210                                                                                                         :
: REFME      PCLL       PDOL       AUT.M      P1SL       ZPXL                                                     ENPUL      : ENABLE PALLET UNLOAD
: H072.6     H09B.2     H091.4     H047.0     H09C.4     H076.7                                                   H08E.6     :  9505 #9506  9902
5 #---]/[----] [------] [---#---] [----]/[------] [---#---] [-----------------------------------------------------( )----#
:  M150      M474   I   M396       Y038   I   M484   I   M183                                                     M374       :
:  6004      9207   I   9205       2114   I   9209   I   9202                                                     #4344      :
: PUCL           I                          I P2SL     I                                                                  :
: H09B.5         I                          I H09C.7   I                                                                  :
5 #---] [-------#                          #---] [---#                                                                  #
:  M477                                     I   M487                                                                     :
:  9208                                     I   9210                                                                     :
: PON1PRS    M62M                           I                                                                            :
: H002.4     H07A.1                         I                                                                            :
5 #---]/[----] [-----------------------#                                                                                  #
:  X014   I  M209                                                                                                         :
:  201    I  9401                                                                                                         :
: ENPUL   I                                                                                                               :
: H08E.6  I                                                                                                               :
5 #---] [----#                                                                                                            #
:  M374                                                                                                                 :
:  9505                                                                                                                 :
: PULSS      AUT.M      ENPUL                                                                                PULMOP     : PALLET UNLOAD MISS OPERATION
: H009.2     H047.0     H08E.6                                                                               H08F.1     :  #4004  6003  9506 #9601
6 #---] [----]/[------]/[---#-----------------------------------------------------------------------------( )----# #9805 10006 10101
:  X04A      Y038   I   M374   I                                                                                M377       :
:  319       2114   I   9505   I                                                                                #4352      :
: M62M           I          I                                                                                              :
: H07A.1         I          I                                                                                              :
6 #---] [-------#          #                                                                                              #
:  M209                     I                                                                                              :
:  9401                     I                                                                                              :
: PULMOP     #ALRST         I                                                                                              :
: H08F.1     H06F.7         I                                                                                              :
6 #---] [----] [-----------#                                                                                              #
:  M377      M127                                                                                                         :
:  9506      5102                                                                                                         :
```

DRN. BY. K.MIURA	TITLE.	CONTROL.
DATE. 1.31.1986	V9C15/40	MAZATROL CAM M-2
CHK'D BY. T.HIRATA	YM2B453G	DRAWING NO.
DATE. 1.31.1986		4241681801G
APPR'D BY. M.MURASE	SEQUENCE DIAGRAM	
DATE. 1.31.1986		SHEET. 95 OF. 103

REV.	DATE.	NAME.

YAMAZAKI MAZAK CORPORATION

```
  : PULSS      AUT.M      PUCL       PULKL      PULMOP                                                    PULST     : PALLET UNLOAD START
  :  H009.2    H047.0     H09B.5     H08A.1     H08F.1                                                    H08F.0    :  9601  9602
1 +---] [------]/[---+---] [------] [------]/[-------------------------------------------------------------( )---*
  :  X04A      Y038   I   M477       M337       M377                                                        M376      :
  :   319      2114   I   9208       9212       9506                                                        #4361     :
  : M62M       PDOL   I                                                                                               :
  :  H07A.1    H091.4 I                                                                                               :
1 +---] [------] [---*                                                                                               *
  :  M209      M396                                                                                                   :
  :  9401      9205                                                                                                   :
  : AUT.M                 PULST      PLD        ENPCSS                                                    PUL       : PALLET UNLOAD
  :  H047.0               H08F.0     H041.5     H005.5                                                    H041.6    :  *9203 *9504  9602  9704
2 +---]/[---------------+---] [------]/[------] [-------------------------------------------------------( )---*   9706 10005 10107
  :  Y038      -      I   M376       Y00D       X02D                                                        Y00E      :
  :  2114             I   9601       9504        217                                                        #4372     :
  : P1SL       PCY2   I                                                                                               :
  :  H09C.4    H043.6 I                                                                                               :
2 +---] [------] [---*                                                                                               *
  :  M484      Y01E   I                                                                                               :
  :  9209      9303   I                                                                                               :
  : P2SL       PCY1   I                                                                                               :
  :  H09C.7    H043.3 I                                                                                               :
2 +---] [------] [---*                                                                                               *
  :  M487      Y01B                                                                                                   :
  :  9210      9301                                                                                                   :
  : PDOL       PULL       PUKL                                                                              ENPS      : ENABLE PALLET SELECT
  :  H091.4    H08F.3     H08A.0                                                                            H09C.1    :  9603 *9604  9605
3 +---] [------] [------] [-------------------------------------------------------------------------------( )---*
  :  M396      M379       M336                                                                                M481      :
  :  9205      9204       9211                                                                                #4376     :
  : PS1SS      AUT.M      ENPS                                                                              P1SMOP    : PALLET 1 SELECT MISS OPERATION
  :  H007.5    H047.0     H09C.1                                                                            H09C.3    :  6003  9604 *9605 *9703
4 +---] [---+---]/[---+---]/[---+-------------------------------------------------------------------------( )---*  *9705 10007 10102 10103
  :  X03D  I   Y038   I   M481   I                                                                            M483      :
  :   312  I   2114   I   9603   I                                                                            #4386     :
  : PS2SS  I          I          I                                                                                      :
  :  H006.7 I         I          I                                                                                      :
4 +---] [---*         *          *                                                                                      *
  :  X037             I          I                                                                                      :
  :   307             I          I                                                                                      :
  : M71M              I          I                                                                                      :
  :  H07A.6           I          I                                                                                      :
4 +---] [---+---------*          *                                                                                      *
  :  M214  I                     I                                                                                      :
  :  9406  I                     I                                                                                      :
  : M72M   I                     I                                                                                      :
  :  H07A.7 I                    I                                                                                      :
4 +---] [---*                    *                                                                                      *
  :  M215                        I                                                                                      :
  :  9407                        I                                                                                      :
  : P1SMOP     *ALRST            I                                                                                      :
  :  H09C.3    H06F.7            I                                                                                      :
4 +---] [------] [-------------*                                                                                      *
  :  M483      M127                                                                                                   :
  :  9604      5102                                                                                                   :
  : PS1SS      P1SL       AUT.M      P2S        P1S        ENPS       P1SMOP                                    PSULKSTC  : PALLET SELECT UNLOCK START COM
  :  H007.5    H09C.4     H047.0     H043.2     H043.1     H09C.1     H09C.3     H005.6                         H064.5    :  9605  9606
5 +---] [------]/[---+---]/[---+---]/[------]/[------] [------]/[---+---] [---+-------------------------------( )---*
  :  X03D      M484   I   Y038   I   Y01A       Y019       M481       M483   I   X02E   I                        M 37      :
  :   312      9209   I   2114   I   9706       9704       9603       9604   I    218   I                        #4402     :
  : PS2SS      P2SL   I          I                                           I ROBOT   I                                  :
  :  H006.7    H09C.7 I          I                                           I H095.3  I                                  :
5 +---] [------]/[---*          *                                           +---]/[---*                                  *
  :  X037      M487              I                                                M427                                     :
  :   307      9210              I                                                4405                                     :
  : M71M                         I                                                                                         :
  :  H07A.6                      I                                                                                         :
5 +---] [---+-------------------*                                                                                         *
  :  M214  I                                                                                                               :
  :  9406  I                                                                                                               :
  : M72M   I                                                                                                               :
  :  H07A.7 I                                                                                                              :
5 +---] [---*                                                                                                              *
  :  M215                                                                                                                  :
  :  9407                                                                                                                  :
  : PSULKSTC                                                                                                       PSULK     : PALLET SELECT UNLOCK
  :  H064.5                                                                                                        H045.4    :  9406  9407  9606 *9701
6 +---] [---------------------+-------------------------------------------------------------------------------( )---*  9702*10202 10203
  :  M 37                     I                                                                                    Y02C      :
  :  9605                     I                                                                                    #4410     :
  : P1SL       P2SL       PSULK      I                                                                                      :
  :  H09C.4    H09C.7     H045.4     I                                                                                      :
6 +---]/[------]/[---+---] [---+                                                                                          *
  :  M484      M487   I   Y02C                                                                                           :
  :  9209      9210   I   9606                                                                                           :
  : PON1PRS           I                                                                                                    :
  :  H002.4           I                                                                                                    :
6 +---]/[---+---------*                                                                                                    *
  :  X014  I                                                                                                               :
  :   201  I                                                                                                               :
  : PON2PRS I                                                                                                              :
  :  H002.5 I                                                                                                              :
6 +---]/[---*                                                                                                              *
  :  X015                                                                                                                  :
  :   202                                                                                                                  :
```

DRN. BY. K.MIURA	TITLE.	CONTROL.
DATE. 1.31.1986	V9C15/40	MAZATROL CAM M-2
CHK'D BY. T.HIRATA	YM2B453G	DRAWING NO.
DATE. 1.31.1986		4241681801G
APPR'D BY. M.MURASE	SEQUENCE DIAGRAM	
DATE. 1.31.1986		SHEET. 96 OF. 103

REV.	DATE.	NAME.

YAMAZAKI MAZAK CORPORATION

```
  : P1SL        PON1PRS     PON2PRS     PSULK                                                  +-------+ : PALLET SELECT STOP
  :  H09C.4      H002.4      H002.5     H045.4                                                 I  T 93 I :   9701 *9704 *9706*10108
1 +---] [-----+---] [-------+---] [-------]/[-------------------------------------------------I K    2I-+ *10109
  :   M484   I   X014       X015        Y02C                                                   I HOAB.5I :
  :   9209   I   201        202         9606                                                   +-------+ :
  : P2SL       I
  :  H09C.7    I
1 +---] [-----+
  :   M487
  :   9210
  : PSULK                                                                                      +-------+ : PALLET SELECT START
  :  H045.4                                                                                    I  T 94 I :   9702  9703  9705
2 +---] [-------------------------------------------------------------------------------------I K   10I-+
  :   Y02C      -                                                                              I HOAB.6I :
  :   9606                                                                                     +-------+ :
  : PS1SS       AUT.M       PSSTT       P1SMOP                                                 P1SST     : PALLET 1 SELECT START
  :  H007.5      H047.0      H0BB.6     H09C.3                                                  H09C.2   :   9703  9704
3 +---] [-------]/[-----+---] [-------]/[-------------------------------------------------------( )-----+
  :   X03D       Y038   I   T 94       M483                                                     M482     :
  :    312       2114   I   9702       9604                                                     #4428    :
  : PCY1        M71M         I
  :  H043.3      H07A.6      I
3 +---] [-------] [-----+
  :   Y01B       M214
  :   9301       9406
  : P1SST       PSSPT       P2S         ENPCSS                                                 P1S       : PALLET 1 SELECT
  :  H09C.2      H0BB.5     H043.2      H005.5      H005.6                                      H043.1   :  *9210  9301 *9605  9704
4 +---] [-------]/[-----+---]/[-------+---] [-----+---] [-----+-------------------------------------( )-----+  *9706 10108
  :   M482       T 93   I   Y01A       X02D     I  X02E     I                                    Y019     :
  :   9703       9701   I   9706        217     I   218     I                                    #4440    :
  : PLD         P1SL         I                   I ROBOT     I
  :  H041.5      H09C.4      I                   I  H095.3   I
4 +---] [-----+---] [-----+                       +---]/[-----+
  :   Y00D   I   M484   I                             M427
  :   9504   I   9209   I                             4405
  : PUL        I
  :  H041.6    I
4 +---] [-----+
  :   Y00E
  :   9602
  : PS2SS       AUT.M       PSSTT       P1SMOP                                                 P2SST     : PALLET 2 SELECT START
  :  H006.7      H047.0      H0BB.6     H09C.3                                                  H09C.5   :   9705  9706
5 +---] [-------]/[-----+---] [-------]/[-------------------------------------------------------( )-----+
  :   X037       Y038   I   T 94       M483                                                     M485     :
  :    307       2114   I   9702       9604                                                     #4448    :
  : PCY2        M72M         I
  :  H043.6      H07A.7      I
5 +---] [-------] [-----+
  :   Y01E       M215
  :   9303       9407
  : P2SST       PSSPT       P1S         ENPCSS                                                 P2S       : PALLET 2 SELECT
  :  H09C.5      H0BB.5     H043.1      H005.5      H005.6                                      H043.2   :  *9209  9303 *9605 *9704
6 +---] [-------]/[-----+---]/[-------+---] [-----+---] [-----+-------------------------------------( )-----+   9706 10109
  :   M485       T 93   I   Y019       X02D     I  X02E     I                                    Y01A     :
  :   9705       9701   I   9704        217     I   218     I                                    #4460    :
  : PLD         P2SL         I                   I ROBOT     I
  :  H041.5      H09C.7      I                   I  H095.3   I
6 +---] [-----+---] [-----+                       +---]/[-----+
  :   Y00D   I   M487   I                             M427
  :   9504   I   9210   I                             4405
  : PUL        I
  :  H041.6    I
6 +---] [-----+
  :   Y00E
  :   9602
  : AUT.M       REFME                                                                          ENPCL     : ENABLE PALLET CLAMP
  :  H047.0      H072.6                                                                         H09B.0   :   9707 *9708 *9901
7 +---]/[-------]/[-----+-------------------------------------------------------------------( )-----+
  :   Y038       M150   I                                                                       M472     :
  :   2114       6004   I                                                                       #4464    :
  : PLDL               I
  :  H08F.2            I
7 +---] [-------------+
  :   M378
  :   9203
  : PCLSS       AUT.M       ENPCL                                                              PCLMOP    : PALLET CLAMP MISS OPERATION
  :  H00A.0      H047.0     H09B.0                                                              H09B.7   :   6003  9708 *9801 10104
8 +---] [-------]/[-----+---]/[-----+-------------------------------------------------------( )-----+
  :   X050       Y038   I   M472   I                                                           M479     :
  :    401       2114   I   9707   I                                                           #4472    :
  : M68M               I          I
  :  H07A.4            I          I
8 +---] [-------------+          +
  :   M212                        I
  :   9404                        I
  : PCLMOP      *ALRST            I
  :  H09B.7      H06F.7           I
8 +---] [-------] [-------------+
  :   M479       M127
  :   9708       5102
```

DRN. BY. K.MIURA	TITLE.	CONTROL.	
DATE. 1.31.1986	V9C15/40	MAZATROL CAM M-2	
CHK'D BY. T.HIRATA	YM2B453G	DRAWING NO.	
DATE. 1.31.1986		4241681801G	
APPR'D BY. M.MURASE	SEQUENCE DIAGRAM		
DATE. 1.31.1986		SHEET. 97 OF. 103	

REV.	DATE.	NAME.

YAMAZAKI MAZAK CORPORATION

```
  : PCLSS      AUT.M      PCLMOP     ENPCSS                                                    PCLST    : PALLET CLAMP START
  :  H00A.0     H047.0     H09B.7     H005.5                                                    H09B.1   :  9801  9802 *9901
1 *---] [-------]/[---+---]/[-------] [-------------------------------------------------------( )-----*
  :    X050       Y038  I    M479       X02D                                                     M473     :
  :     401       2114  I    9708       217                                                      #4481    :
  : M68M                I                                                                                  :
  :  H07A.4             I                                                                                  :
1 *---] [-------------*                                                                                    *
  :    M212                I                                                                                  :
  :    9404                I                                                                                  :
  : M61M       PLDL         I                                                                                  :
  :  H07A.0     H08F.2      I                                                                                  :
1 *---] [-------] [---*                                                                                    *
  :    M208       -M378                                                                                      :
  :    9305       9203                                                                                       :
  : PCLST                              PUC                                                       PCL      : PALLET CLAMP
  :  H09B.1                             H040.1                                                    H040.0   :  5305  5306 *9208  9802
2 *---] [-------------*-------------*---]/[-------------------------------------------------------( )-----*  *9901 10005
  :    M473                I           I   Y001                                                     Y000     :
  :    9801                I           I   9901                                                     #4494    :
  : PCLL       PUCST        I           I                                                                   :
  :  H09B.2     H09B.4      I           I                                                                   :
2 *---] [-------]/[---*                 *                                                                   *
  :    M474       M476                   I                                                                   :
  :    9207       9805                   I                                                                   :
  : PUCST      AUT.M      PCL            I                                                                   :
  :  H09B.4     H047.0     H040.0      I                                                                   :
2 *---]/[---*---] [---*---] [---*                                                                           *
  :    M476   I   Y038   I   Y000                                                                           :
  :    9805   I   2114   I   9802                                                                           :
  : ENPUC     I REFME     I                                                                                  :
  :  H09B.3   I  H072.6   I                                                                                  :
2 *---]/[---*---] [---*                                                                                    *
  :    M475       M150                                                                                       :
  :    9803       6004                                                                                       :
  : F2.B       F3.B       REFME      AUT.M      ZPXL                                                      ENPUC    : ENABLE PALLET UNCLAMP
  :  H165.3     H165.4     H072.6     H047.0     H076.7                                                    H09B.3   :  *9802  9803 *9804
3 *---] [-------] [-------]/[-------]/[---*---] [-------------------------------------------------------( )-----*
  :    X0EB       X0EC       M150       Y038   I   M183                                                     M475     :
  :    1001       1002       6004       2114   I   9202                                                     #4502    :
  : PLDL                                        I                                                                   :
  :  H08F.2                                     I                                                                   :
3 *---] [---*-------------------------------*                                                                   *
  :    M378   I                                                                                                :
  :    9203   I                                                                                                :
  : PULL      I                                                                                                :
  :  H08F.3   I                                                                                                :
3 *---] [---*                                                                                                  *
  :    M379                                                                                                    :
  :    9204                                                                                                    :
  : PUCSS      AUT.M      ENPUC                                                                     PUCMOP   : PALLET UNCLAMP MISS OPERATION
  :  H00A.1     H047.0     H09B.3                                                                    H09C.0   :  *4004  6003  9804 *9805
4 *---] [-------]/[---*---]/[---*-------------------------------------------------------------------( )-----*  10105
  :    X051       Y038   I   M475   I                                                                  M480     :
  :     402       2114   I   9803   I                                                                  #4510    :
  : M69M                I           I                                                                           :
  :  H07A.5             I           I                                                                           :
4 *---] [-------------*           *                                                                           *
  :    M213                        I                                                                           :
  :    9405                        I                                                                           :
  : PUCMOP     *ALRST               I                                                                           :
  :  H09C.0     H06F.7              I                                                                           :
4 *---] [-------] [-------------*                                                                               *
  :    M480       M127                                                                                           :
  :    9804       5102                                                                                           :
  : PUCSS      AUT.M                                PUCMOP     MARETL     ENPCSS                            PUCST    : PALLET UNCLAMP START
  :  H00A.1     H047.0                                H09C.0     H08D.3     H005.5                            H09B.4   :  *9802  9805  9901
5 *---] [-------]/[---*-------------------------*---]/[-------] [-------] [-------------------------------( )-----*
  :    X051       Y038   I                       I   M480       M363       X02D                              M476     :
  :     402       2114   I                       I   9804       2911       217                               #4525    :
  : M69M                I                       I                                                                   :
  :  H07A.5             I                       I                                                                   :
5 *---] [-------------*                         *                                                                   *
  :    M213                                     I                                                                   :
  :    9405                                     I                                                                   :
  : P1SL       PCY2       M62M       PULMOP     I                                                                   :
  :  H09C.4     H043.6     H07A.1     H08F.1     I                                                                   :
5 *---] [-------] [---*---] [---*-------]/[---*                                                                   *
  :    M484       Y01E   I   M209       M377                                                                       :
  :    9209       9303   I   9401       9506                                                                       :
  : P2SL       PCY1       I                                                                                          :
  :  H09C.7     H043.3     I                                                                                          :
5 *---] [-------] [---*                                                                                            *
  :    M487       Y01B                                                                                               :
  :    9210       9301                                                                                               :
```

		DRN. BY. K.MIURA	TITLE.
		DATE. 1.31.1986	V9C15/40
		CHK'D BY. T.HIRATA	YM2B453G
		DATE. 1.31.1986	
		APPR'D BY. M.MURASE	SEQUENCE DIAGRAM
		DATE. 1.31.1986	
REV.	DATE.	NAME.	

CONTROL. MAZATROL CAM M-2

DRAWING NO. 4241681801G

SHEET. 98 OF. 103

YAMAZAKI MAZAK CORPORATION

```
  : PUCST                                  PCL                                                                  PUC      : PALLET UNCLAMP
  :  H09B.4                                 H040.0                                                              H040.1   :   5304  5307 *9207 *9802
1 *---] [-----------------*----------*---]/[-----------------------------------------------------------------( )---*   9901 10005
  :    M476              I          I    Y000                                                                  Y001     :
  :    9805              I          I    9802                                                                  #4538    :
  : PUCL        PCLST    I          I                                                                                    :
  :  H09B.5      H09B.1  I          I                                                                                    :
1 *---] [-------]/[-----*          *                                                                                    :
  :    M477       M473              I                                                                                    :
  :    9208       9801              I                                                                                    :
  : PCLST       AUT.M      PUC      I                                                                                    :
  :  H09B.1      H047.0    H040.1   I                                                                                    :
1 *---]/[-----*---] [-----*---] [---*                                                                                    :
  :    M473  I   Y038  I   Y001                                                                                         :
  :    9801  I   2114  I   9901                                                                                         :
  : ENPCL    I REFME    I                                                                                                :
  :  H09B.0  I  H072.6  I                                                                                                :
1 *---]/[-----*---] [-----*                                                                                              :
  :    M472       M150                                                                                                   :
  :    9707       6004                                                                                                   :
  : PLDL        PLSS       AUT.M     ENPLD                                                                  PULKCD   : PALLET UNLOCK COMMAND
  :  H08F.2      H009.0    H047.0     H08E.2                                                                 H064.3   :   9902  9903
2 *---]/[-------] [-----*---]/[-----*---] [---*-----------------------------------------------------------------( )---*
  :    M378       X048  I   Y038  I   M370  I                                                                  M 35     :
  :    9203        318  I   2114  I   9501  I                                                                  #4554    :
  : PULL        PULSS    I         I ENPUL    I                                                                          :
  :  H08F.3      H009.2  I         I  H08E.6  I                                                                          :
2 *---]/[-------] [-----*         *---] [-----*                                                                          :
  :    M379       X04A              I   M374                                                                            :
  :    9204        319              I   9505                                                                            :
  : M61M        PLDL                I                                                                                   :
  :  H07A.0      H08F.2              I                                                                                   :
2 *---] [-------]/[-----------------*                                                                                   :
  :    M208       M378              I                                                                                   :
  :    9305       9203              I                                                                                   :
  : M62M        PULL                I                                                                                   :
  :  H07A.1      H08F.3              I                                                                                   :
2 *---] [-------]/[-----------------*                                                                                   :
  :    M209       M379                                                                                                   :
  :    9401       9204                                                                                                   :
  : PULKCD                                                                                                  PULK     : PALLET UNLOCK
  :  H064.3                                                                                                 H043.7   :  *9211  9212  9903*10110
3 *---] [-----------------------------*-----------------------------------------------------------------( )---*   10201
  :    M 35                          I                                                                      Y01F     :
  :    9902                          I                                                                      #4560    :
  : PULK        PLDL       PULL      I                                                                                    :
  :  H043.7      H08F.2    H08F.3    I                                                                                    :
3 *---] [-------]/[-------]/[-----*                                                                                     :
  :    Y01F       M378      M379                                                                                         :
  :    9903       9203      9204                                                                                         :
  : PLDL                                                                                                    ENPDC    : ENABLE PALLET DOOR CLOSE
  :  H08F.2                                                                                                 H08F.4   :   9904 *9905
4 *---] [-----*-----------------------------------------------------------------------------------------( )---*
  :    M378  I                                                                                            M380     :
  :    9203  I                                                                                            #4563    :
  : PULL     I                                                                                                        :
  :  H08F.3  I                                                                                                        :
4 *---] [-----*                                                                                                         :
  :    M379                                                                                                             :
  :    9204                                                                                                             :
  : PDOSS       AUT.M      ENPDC                                                                          PDCMOP   : PALLET DOOR CLOSE MISS OP.
  :  H005.4      H047.0    H08F.4                                                                          H091.6   :   5705  6003  9905*10001
5 *---] [-----*---]/[-----*---]/[-----*-----------------------------------------------------------------( )---*  *10003
  :    X02C  I   Y038  I   M380  I                                                                          M398     :
  :     216  I   2114  I   9904  I                                                                          #4573    :
  : PDCSS    I         I         I                                                                                    :
  :  H009.3  I         I         I                                                                                    :
5 *---] [-----*         *         *                                                                                    :
  :    X04B              I         I                                                                                    :
  :     320              I         I                                                                                    :
  : M64M                 I         I                                                                                    :
  :  H07A.2              I         I                                                                                    :
5 *---] [-----*---------*         *                                                                                    :
  :    M210  I                     I                                                                                    :
  :    9402  I                     I                                                                                    :
  : M65M     I                     I                                                                                    :
  :  H07A.3  I                     I                                                                                    :
5 *---] [-----*                     *                                                                                    :
  :    M211                          I                                                                                    :
  :    9403                          I                                                                                    :
  : PDCMOP      *ALRST               I                                                                                    :
  :  H091.6      H06F.7              I                                                                                    :
5 *---] [-------] [-----------------*                                                                                    :
  :    M398       M127                                                                                                   :
  :    9905       5102                                                                                                   :
```

REV.	DATE.	NAME.	

DRN. BY. K.MIURA	TITLE.	CONTROL.
DATE. 1.31.1986	V9C15/40	MAZATROL CAM M-2
CHK'D BY. T.HIRATA	YM2B453G	DRAWING NO.
DATE. 1.31.1986		4241681801G
APPR'D BY. M.MURASE	SEQUENCE DIAGRAM	
DATE. 1.31.1986		SHEET. 99 OF. 103

YAMAZAKI MAZAK CORPORATION

```
  : PDOSS      AUT.M                    AUT.M      REFME                                                    PDOST    : PALLET DOOR OPEN START
  :  H005.4    H047.0                    H047.0     H072.6                                                   H08F.6   :  10001 10002
1 +---] [-------]/[---+----------+---]/[-------]/[---+------------------------------------------------------( )---+
  :   X02C       Y038  I          I     Y038       M150  I                                                    M382     :
  :    216       2114  I          I     2114       6004  I                                                    #4588    :
  : M65M                I          I PDCMOP                I                                                            :
  :  H07A.3             I          I  H091.6               I                                                            :
1 +---] [-------------+          +---]/[-------------+                                                                  :
  :   M211                         I   M398                                                                            :
  :   9403                         I   9905                                                                            :
  : M61M       PLDMOP     PDCST    I                                                                                   :
  :  H07A.0    H08E.5     H08F.5   I                                                                                   :
1 +---] [-------]/[-------]/[---+                                                                                      :
  :   M208       M373       M381   I                                                                                   :
  :   9305       9502      10003   I                                                                                   :
  : M62M       ENPLD                I                                                                                   :
  :  H07A.1    H08E.2               I                                                                                   :
1 +---] [-------]/[-------------+                                                                                      :
  :   M209       M370                                                                                                  :
  :   9401       9501                                                                                                  :
  : PDOST      PDC        ENPCSS                                                                   PDO      : PALLET DOOR OPEN
  :  H08F.6    H040.6     H005.5                                                                   H040.5   :  5704 *9206 10002*10004
2 +---] [-------]/[-------] [-----------------------------------------------------------------------( )---+
  :   M382       Y006       X02D                                                                     Y005     :
  :  10001      10004        217                                                                    #4592    :
  : PDCSS      AUT.M      PDCMOP                                                                   PDCST    : PALLET DOOR CLOSE START
  :  H009.3    H047.0     H091.6                                                                   H08F.5   : *10001 10003 10004
3 +---] [-------]/[---+---]/[-----------------------------------------------------------------------( )---+
  :   X04B       Y038  I   M398                                                                     M381     :
  :    320       2114  I   9905                                                                     #4600    :
  : M64M                I                                                                                            :
  :  H07A.2             I                                                                                            :
3 +---] [-------------+                                                                                              :
  :   M210              I                                                                                            :
  :   9402              I                                                                                            :
  : M61M       PLDL       I                                                                                            :
  :  H07A.0    H08F.2     I                                                                                            :
3 +---] [-------] [---+                                                                                                :
  :   M208       M378                                                                                                  :
  :   9305       9203                                                                                                  :
  : PDCST      PDO        ENPCSS                                                                   PDC      : PALLET DOOR CLOSE
  :  H08F.5    H040.5     H005.5                                                                   H040.6   :  5704 *9205*10002 10004
4 +---] [-------]/[-------] [-----------------------------------------------------------------------( )---+
  :   M381       Y005       X02D                                                                     Y006     :
  :  10003      10002        217                                                                    #4604    :
  : PCL        PCLL                                                                                 PAB      : PALLET AIR BLOW
  :  H040.0    H09B.2                                                                               H040.4   :  10005
5 +---] [-------]/[---+-----------------------------------------------------------------------------( )---+
  :   Y000       M474  I                                                                             Y004     :
  :   9802       9207  I                                                                             #4616    :
  : PUC        PUCL       I                                                                                            :
  :  H040.1    H09B.5     I                                                                                            :
5 +---] [-------]/[---+                                                                                                :
  :   Y001       M477  I                                                                                                :
  :   9901       9208  I                                                                                                :
  : PLD        PLDL       I                                                                                            :
  :  H041.5    H08F.2     I                                                                                            :
5 +---] [-------]/[---+                                                                                                :
  :   Y00D       M378  I                                                                                                :
  :   9504       9203  I                                                                                                :
  : PUL        PULL       I                                                                                            :
  :  H041.6    H08F.3     I                                                                                            :
5 +---] [-------]/[---+                                                                                                :
  :   Y00E       M379                                                                                                  :
  :   9602       9204                                                                                                  :
  : PLDMOP     AUT.M                                                                                +-------+ : MNL PALLET LOAD/UNLOAD MOP.
  :  H08E.5    H047.0                                                                               I T112 I :  10006
6 +---] [---+---]/[---+-----------------------------------------------------------------------------I K   0I-+
  :   M373  I    Y038  I                                                                             I H0AE.0I :
  :   9502  I    2114  I                                                                             +-------+ :
  : PULMOP  I          I                                                                                            :
  :  H08F.1 I          I                                                                                            :
6 +---] [---+          +                                                                                            :
  :   M377               I                                                                                            :
  :   9506               I                                                                                            :
  : PL/ULMOP   *ALRST    I                                                                                            :
  :  H0BE.0    H06F.7     I                                                                                            :
6 +---] [-------] [---+                                                                                                :
  :   T112       M127                                                                                                  :
  :  10006      5102                                                                                                   :
  : P1SMOP     AUT.M                                                                                +-------+ : MNL PALLET SELECT MOP.
  :  H09C.3    H047.0                                                                               I T113 I :  10007
7 +---] [-------]/[---+-----------------------------------------------------------------------------I K   0I-+
  :   M483       Y038  I                                                                             I H0AE.1I :
  :   9604       2114  I                                                                             +-------+ :
  : MPSMOP     *ALRST    I                                                                                            :
  :  H0BE.1    H06F.7     I                                                                                            :
7 +---] [-------] [---+                                                                                                :
  :   T113       M127                                                                                                  :
  :  10007      5102                                                                                                   :
  : M61M       PLDMOP                                                                               +-------+ : M61 MISS OPE.
  :  H07A.0    H08E.5                                                                               I T114 I :  10008
8 +---] [-------] [---+-----------------------------------------------------------------------------I K   0I-+
  :   M208       M373  I                                                                             I H0AE.2I :
  :   9305       9502  I                                                                             +-------+ :
  : M61MOP     *ALRST    I                                                                                            :
  :  H0BE.2    H06F.7     I                                                                                            :
8 +---] [-------] [---+                                                                                                :
  :   T114       M127                                                                                                  :
  :  10008      5102                                                                                                   :
```

REV.	DATE.	NAME.	

DRN. BY. K.MIURA	TITLE.	CONTROL.
DATE. 1.31.1986	V8C15/40	MAZATROL CAM M-2
CHK'D BY. T.HIRATA	YM2B453G	DRAWING NO.
DATE. 1.31.1986		42416818010
APPR'D BY. M.MURASE	SEQUENCE DIAGRAM	
DATE. 1.31.1986		SHEET. 100 OF. 103

YAMAZAKI MAZAK CORPORATION

```
  : M62M        PULMOP                                                  +-------+ : M62 MISS OPE.
  :  H07A.1      H08F.1                                                 I T115 I :  10101
1 +---] [--------] [---+-------------------------------------------------I K   0I-+
  :   M209        M377  I                                               I H0AE.3I :
  :   9401        9506  I                                               +-------+ :
  : M62MOP      *ALRST  I                                                         :
  :  H0BE.3      H06F.7  I                                                        +
1 +---] [--------] [---+                                                          :
  :   T115        M127                                                            :
  :  10101        5102                                                            :
  : M71M        P1SMOP                                                  +-------+ : M71 MISS OPE.
  :  H07A.6      H09C.3                                                 I T116 I :  10102
2 +---] [--------] [---+-------------------------------------------------I K   0I-+
  :   M214        M483  I                                               I H0AE.4I :
  :   9406        9604  I                                               +-------+ :
  : M71MOP      *ALRST  I                                                         :
  :  H0BE.4      H06F.7  I                                                        +
2 +---] [--------] [---+                                                          :
  :   T116        M127                                                            :
  :  10102        5102                                                            :
  : M72M        P1SMOP                                                  +-------+ : M72 MISS OPE.
  :  H07A.7      H09C.3                                                 I T117 I :  10103
3 +---] [--------] [---+-------------------------------------------------I K   0I-+
  :   M215        M483  I                                               I H0AE.5I :
  :   9407        9604  I                                               +-------+ :
  : M72MOP      *ALRST  I                                                         :
  :  H0BE.5      H06F.7  I                                                        +
3 +---] [--------] [---+                                                          :
  :   T117        M127                                                            :
  :  10103        5102                                                            :
  : PCLMOP                                                              +-------+ : PALLET CLAMP MISS OPE.
  :  H09B.7                                                             I T118 I :  10104
4 +---] [-------------------------------------------------------------I K   0I-+
  :   M479                                                              I H0AE.6I :
  :   9708                                                              +-------+ :
  : PUCMOP                                                              +-------+ : PALLET UNCLAMP MISS OPE.
  :  H09C.0                                                             I T119 I :  10105
5 +---] [-------------------------------------------------------------I K   0I-+
  :   M480                                                              I H0AE.7I :
  :   9804                                                              +-------+ :
  : PLD         PLDL                                                    +-------+ : PALLET LOAD ACTION (ALARM)
  :  H041.5      H08F.2                                                 I T120 I :  5801 10106
6 +---] [--------]/[---+-------------------------------------------------I K 150I-+
  :   Y00D        M378  I                                               I H0AF.0I :
  :   9504        9203  I                                               +-------+ :
  : PLDAL       *ALRST  I                                                         :
  :  H0BF.0      H06F.7  I                                                        +
6 +---] [--------] [---+                                                          :
  :   T120        M127                                                            :
  :  10106        5102                                                            :
  : PUL         PULL                                                    +-------+ : PALLET UNLOAD ACTION (ALARM)
  :  H041.6      H08F.3                                                 I T121 I :  5801 10107
7 +---] [--------]/[---+-------------------------------------------------I K 150I-+
  :   Y00E        M379  I                                               I H0AF.1I :
  :   9602        9204  I                                               +-------+ :
  : PULAL       *ALRST  I                                                         :
  :  H0BF.1      H06F.7  I                                                        +
7 +---] [--------] [---+                                                          :
  :   T121        M127                                                            :
  :  10107        5102                                                            :
  : P1SL        P1S                                                     +-------+ : PALLET 1 SELECT ACTION (ALARM)
  :  H09C.4      H043.1                                                 I T122 I :  5801 10108
8 +---]/[---+---] [---+-------------------------------------------------I K 150I-+
  :   M484  I     Y019  I                                               I H0AF.2I :
  :   9209  I     9704  I                                               +-------+ :
  : PSSPT   I           I                                                         :
  :  H0BB.5 I           I                                                         +
8 +---]/[---+           +                                                         :
  :   T 93              I                                                         :
  :   9701              I                                                         :
  : P1SAL       *ALRST  I                                                         :
  :  H0BF.2      H06F.7  I                                                        +
8 +---] [--------] [---+                                                          :
  :   T122        M127                                                            :
  :  10108        5102                                                            :
  : P2SL        P2S                                                     +-------+ : PALLET 2 SELECT ACTION (ALARM)
  :  H09C.7      H043.2                                                 I T123 I :  5801 10109
9 +---]/[---+---] [---+-------------------------------------------------I K 150I-+
  :   M487  I     Y01A  I                                               I H0AF.3I :
  :   9210  I     9706  I                                               +-------+ :
  : PSSPT   I           I                                                         :
  :  H0BB.5 I           I                                                         +
9 +---]/[---+           +                                                         :
  :   T 93              I                                                         :
  :   9701              I                                                         :
  : P2SAL       *ALRST  I                                                         :
  :  H0BF.3      H06F.7  I                                                        +
9 +---] [--------] [---+                                                          :
  :   T123        M127                                                            :
  :  10109        5102                                                            :
  : PULK        PLKL                                                    +-------+ : PALLET LOCK ACTION (ALARM)
  :  H043.7      H08A.0                                                 I T124 I :  5801 10110
10 +---]/[--------]/[---+-------------------------------------------------I K  60I-+
  :   Y01F        M336  I                                               I H0AF.4I :
  :   9903        9211  I                                               +-------+ :
  : PLKAL       *ALRST  I                                                         :
  :  H0BF.4      H06F.7  I                                                        +
10 +---] [--------] [---+                                                          :
  :   T124        M127                                                            :
  :  10110        5102                                                            :
```

DRN. BY. K.MIURA	TITLE.	CONTROL.
DATE. 1.31.1986	VQC15/40	MAZATROL CAM M-2
CHK'D BY. T.HIRATA	YM2B453G	DRAWING NO.
DATE. 1.31.1986		42416818016
APPR'D BY. M.MURASE	SEQUENCE DIAGRAM	
DATE. 1.31.1986		SHEET. 101 OF. 103

REV.	DATE.	NAME.

YAMAZAKI MAZAK CORPORATION

```
  : PULK        PULKL                                                                  +-------+ : PALLET UNLOCK ACTION (ALARM)
  :  H043.7      H08A.1                                                                I  T125 I :   5801 10201
1 +---] [-------]/[---+-------------------------------------------------------------I K   60I-+
  :   Y01F       M337  I                                                               I HOAF.5I :
  :   9903       9212  I                                                               +-------+ :
  : PULKAL      *ALRST  I                                                                        :
  :  H0BF.5      H06F.7  I                                                                       :
1 +---] [-------] [---+                                                                          :
  :   T125       M127                                                                            :
  :  10201       5102                                                                            :
  : PSULK                                                                               +-------+ : PALLET SELECT UNLOCK ACTION
  :  H045.4                                                                             I  T126 I :  10202
2 +---]/[-------------------------------------------------------------------------I K    0I-+
  :   Y02C                                                                              I HOAF.6I :
  :   9606                                                                              +-------+ :
  : PSULK                                                                               +-------+ : PALLET SELECT LOCK ACTION
  :  H045.4                                                                             I  T127 I :  10203
3 +---] [-------------------------------------------------------------------------I K    0I-+
  :   Y02C                                                                              I HOAF.7I :
  :   9606                                                                              +-------+ :
  : M61M        M62M          M64M          M65M          M68M          M69M          M71M          M72M          M0P7          PCFIN     : PALLET CHANGE FIN
  :  H07A.0      H07A.1        H07A.2        H07A.3        H07A.4        H07A.5        H07A.6        H07A.7        H0CA.6        H091.2     H091.1 :   5007 10204
4 +---]/[-------]/[-------]/[-------]/[-------]/[-------]/[-------]/[-------]/[-------]/[-------]/[-------( )---+
  :   M208       M209          M210          M211          M212          M213          M214          M215          F 86          M394       M393  :
  :   9305       9401          9402          9403          9404          9405          9406          9407          6003          6501       #4726 :
  : M61M        PCY1          PCY2          MGTDPRS                                                                                   +-------+ :
  :  H07A.0      H043.3        H043.6        H00B.2                                                                                    I  T 62 I :   4404 10205
5 +---] [---+---]/[-------]/[---+---] [-------------------------------------------------------------------------I K   600I-+
  :   M208  I    Y01B          Y01E  I       X05A                                                                                      I HOA7.6I :
  :   9305  I    9301          9303  I        406                                                                                      +-------+ :
  : M62M    I                        I                                                                                                          :
  :  H07A.1 I                        I                                                                                                          :
5 +---] [---+                        +                                                                                                          :
  :   M209                           I                                                                                                          :
  :   9401                           I                                                                                                          :
  : 2PCS                             I                                                                                                          :
  :  H093.0                          I                                                                                                          :
5 +---]/[-----------------------------+                                                                                                          :
  :   M408                                                                                                                                       :
  :   3805                                                                                                                                       :
  : TCME                                                                                                                                +-------+ :
  :  H074.0                                                                                                                             I +   I :
6 +---] [-------------------------------------------------------------------------I K    1I-+
  :   M160                                                                                                                              I  D 40I :
  :   6505                                                                                                                              +-------+ :
  : CYCLE-A     MEMA-2                                                                                                                  +-------+ :
  :  H077.0      H077.3                                                                                                                I +   I :
7 +---] [-------]/[---+-------------------------------------------------------------I K    1I-+
  :   M184       M187  I                                                                                                               I  D 41I :
  :   6803       6809  I                                                                                                               +-------+ :
  : CYCLE-B     MEMV-3  I                                                                                                                        :
  :  H080.0      H080.5  I                                                                                                                       :
7 +---] [-------]/[---+                                                                                                                          :
  :   M256       M261  I                                                                                                                         :
  :   6811       7002  I                                                                                                                         :
  : CYCLE-C     MEMC-2  I                                                                                                                        :
  :  H081.0      H081.3  I                                                                                                                       :
7 +---] [-------]/[---+                                                                                                                          :
  :   M264       M267                                                                                                                            :
  :   7006       7101                                                                                                                            :
  : CYCLE-D     ATCFINME      TSME                                                                                                      +-------+ :
  :  H081.7      H091.3        H064.1                                                                                                    I +   I :
8 +---] [---+---]/[-------]/[-------------------------------------------------------I K    1I-+
  :   M271  I    M395          M 33                                                                                                      I  D 42I :
  :   7104  I    7901          3303                                                                                                      +-------+ :
  : CYCLE-E  I                                                                                                                                     :
  :  H083.0  I                                                                                                                                     :
8 +---] [---+                                                                                                                                      :
  :   M280  I                                                                                                                                      :
  :   7205  I                                                                                                                                      :
  : CYCLE-F  I                                                                                                                                     :
  :  H084.0  I                                                                                                                                     :
8 +---] [---+                                                                                                                                      :
  :   M288                                                                                                                                         :
  :   7301                                                                                                                                         :
  : TUC.M       TCPRS                                                                                                                   +-------+ :
  :  H044.5      H003.0                                                                                                                I +   I :
9 +---]/[-------]/[-------------------------------------------------------------I K    1I-+
  :   Y025       X018                                                                                                                  I  D 43I :
  :   3412        205                                                                                                                  +-------+ :
  : TUC.M       TUCPRS                                                                                                                  +-------+ :
  :  H044.5      H003.1                                                                                                                I +   I :
10 +---] [-------]/[-------------------------------------------------------------I K    1I-+
  :   Y025       X019                                                                                                                  I  D 44I :
  :   3412        206                                                                                                                  +-------+ :
  : ORCM1.M     SOSA                                                                                                                    +-------+ :
  :  H044.3      H06B.4                                                                                                                I +   I :
11 +---] [-------]/[-------------------------------------------------------------I K    1I-+
  :   Y023       M 92                                                                                                                  I  D 48I :
  :   2806       5408                                                                                                                  +-------+ :
  : RST.B                                                                                                                               +-------+ :
  :  H160.0                                                                                                                             I MOV   I :
12 +---] [-------------------------------------------------------------------------I K    0I-+
  :   X0C0                                                                                                                              I  D 40I :
  :    806                                                                                                                              +-------+ :
  : RST.B                                                                                                                               +-------+ :
  :  H160.0                                                                                                                             I MOV   I :
13 +---] [-------------------------------------------------------------------------I K    0I-+
  :   X0C0                                                                                                                              I  D 41I :
  :    806                                                                                                                              +-------+ :
```

DRN. BY. K.MIURA	TITLE.	CONTROL.
DATE. 1.31.1986	VQC15/40	MAZATROL CAM M-2
CHK'D BY. T.HIRATA	YM2B453G	DRAWING NO.
DATE. 1.31.1986		4241681801G
APPR'D BY. M.MURASE	SEQUENCE DIAGRAM	
DATE. 1.31.1986		SHEET. 102 OF. 703

REV.	DATE.	NAME.

YAMAZAKI MAZAK CORPORATION

```
  : RST.B                                                                  +-------+ :
  :   H160.0                                                               I MOV   I :
1 +---] [-------------------------------------------------------------------I K   0I-+
  :    X0C0                                                                I   D 42I :
  :     806                                                                +-------+ :
  : RST.B                                                                  +-------+ :
  :   H160.0                                                               I MOV   I :
2 +---] [-------------------------------------------------------------------I K   0I-+
  :    X0C0                                                                I   D 43I :
  :     806                                                                +-------+ :
  : RST.B                                                                  +-------+ :
  :   H160.0                                                               I MOV   I :
3 +---] [-------------------------------------------------------------------I K   0I-+
  :    X0C0                                                                I   D 44I :
  :     806                                                                +-------+ :
  : RST.B                                                                  +-------+ :
  :   H160.0                                                               I MOV   I :
4 +---] [-------------------------------------------------------------------I K   0I-+
  :    X0C0                                                                I   D 48I :
  :     806                                                                +-------+ :
  : SKIP1.M                                                                +-------+ : MEASURING ARM IN ON
  :   H007.7      H117.1                                                   I PLS   I :  10305 10306
5 +---] [-------]/[-------------------------------------------------------I M358  I-+
  :    X03F        Y1B9                                                    I H08C.6I :
  :     313       10305                                                    +-------+ :
  : ARM1ON                                                                 AL77,78   : ALARM 77 & 78
  :   H08C.6      H117.1                                                     H047.6  :  10306
6 +---] [-------]/[-------------------------------------------------------( )---+
  :    M358        Y1B9                                                      Y03E   :
  :   10305       10305                                                     #4802   :
```

REV.	DATE.	NAME.	

DRN. BY. K.MIURA	TITLE.	CONTROL.
DATE. 1.31.1986	VQC15/40	MAZATROL CAM M-2
CHK'D BY. T.HIRATA	YM2B453G	DRAWING NO.
DATE. 1.31.1986		4241681801G
APPR'D BY. M.MURASE	SEQUENCE DIAGRAM	
DATE. 1.31.1986		SHEET. 103 OF. 103

YAMAZAKI MAZAK CORPORATION

Classification / Unit name		1	2	3	4	5	6	7	8	9	0
01	INNER PARTS OF CABINET	1 FIIM 1050 JPN	2 FIIM 1050 YMC	3 FIIM 1050 YME	4 △ EARTH LEAKAGE BR.	5 △ FIIM 115~	6	7	8	9	10
		11	12	13	14	15	16	17	18	19	20
02	HEAD LUBE	OIL CHILLER (AKS-103V)	FIIM 1050 JPN	FIIM 1050 YMC	FIIM 1050 YME	△ OIL AIR	△ FIIM 115~				
03	COOLANT	POWERFUL COOLANT	FIIM 1050 JPN	FIIM 1050 YMC	FIIM 1050 YME	△ FIIM STD	△ FIIM 750W	△ LARG C.P.T COOLANT			
04	NC, SERVO AMP	FIIM 1050 std JPN	FIIM 1050 std EX	△ FIIM 115~ JPN	△ FIIM 115~ EX.						
05	SEQUENCE CONTROLLER										
06	CONTROLLER (SPINDLE etc)	FIIM 1050 std JPN	FIIM 1050 std EX	△ FIIM 115~ STD							
07	M/T CONTROLLER										
08	PENDANT	FIIM 1050	△ FIIM STD 115~	△ FIIM Monitor C	△ FIIM Monitor B	△ HANDY M.P.G.1	△ HANDY M.P.G.x3				
09	WIRING PARTS ON MACHINE	STANDARD	STD. (MASS)	FIIM 1050	INDIRECT COOLING CABINET	△ FIIM 115~					
10	CABLE	STANDARD (M2)	STD. (M2V)	FIIM 1050 std.	FIIM 1050 ZPC	△ FIIM 115~					
11	SW. OF MACHINE SIDE	STANDARD	FIIM std								
12	OPTION I	CHIP CONVEYOR	STD. (MASS)	FIIM 1050 JPN	FIIM 1050 YMC	FIIM 1050 YME	△ FIIM 115~				
17	YME OPTION	STANDARD	YMC STD.	△ YME OP.	FIIM 1050 YME	FIIM 1050 YMC	△ FIIM YME 115~	△ FIIM YMC 115~			
18	MONITOR SYSTEM (AFC MMS TLM/TBR)	MMS	FIIM STD MONITOR C	FIIM 1050 MONITOR B	△ FIIM 115~ MONITOR B						
19	MIST COOLANT										
20	CYCLE FINISH LIGHT	CYCLE FINISH LIGHT	FIIM CYCLE FIN	△ FIIM 115~	△ ALARM P.T.L	△ CYCLE START P.T.L	△ 3 PATO LIGHT TOWER				
21	PALLET / DRUM CHANGER	△ ZPC	FIIM 1050 ZPC	INDIRECT COOLING CABINET	FIIM △ 115~						
22	INDEX / ROTARY TABLE	INDEX TABLE	△ NC ROTARY	FIIM 1050 INDEX TABLE	FIIM 1050 NC ROTARY	△ FIIM 115~ NC ROTARY	△ FIIM 115~ INDEX				
23	PALLET DOOR										
24	AUTO POWER ON / OFF	AUTO POWER OFF	△ AUTO POWER ON / OFF	△ CPU LINK	FIIM AUTO POWER OFF	△ FIIM AUTO POWER OFF					
25											
26											
27	SIDE COVER										
28	FMS	△ CPU LINK A M2V	△ CPU LINK B M2V	△ CPU LINK C M2V							
29	MAGNE SCALE	X, Y, Z MAGNE SCALE									
30	TAP COOLANT										
31	AUX. HEAD										
38	SPARE PARTS (YAMAZAKI)	SPARE PARTS									
39	SPARE PARTS (NC. CONTROLLER etc.)										
40	SPECIAL ORDER	CPU LINK A	ZPC		ZPC (AUTO ON/OFF)	[illegible]					

SHEET

4240199201D

TITLE Unit code list

Machine code 4 2 4 (Machine name 10P.15/40)

DRN BY KN.uca DATE Apr.28.94

CHK'D BY ____ DATE ____

PARTS LIST 7 0 0 5 0 5 R 0 1 0 0

Symbolics on electricity ____ Machine code ____ Unit No. ____

Design changed No. ____ Page ____ Unit running No. ____

△ △ △ △

△ △ △ △

△ △ △ △

△ ADDITION

△ [illegible]

△ 18.7 OPN. 光-0

SHEET

1	2
U	7

UN

機種	VQC-15/40 4244	PARTS LIST	表示	INNER PARTS OF CABINET	LIST No.	3 4 5 6 7 8	ページ	設変	全頁数
						4 2 4 0 1 R	0 1	0 2	6

変更No 技術No	識別 9 10	区分 SEC. 11	ユニット番号 UNIT No 12–22	SPECIFICATION OF UNIT	組図 No.	リスト No.	SET No.	変更処理
		A	7 4 2 4 0 1 0 1 0 0 0	F11M 10台ロ. JPN.				
		B	0 2 0 0 0	〃 YMC				
		C	0 3 0 0 0	〃 YME				
		D	0 4 0 0 0	EARTH LEAKAGE BREAKER				
		E	0 5 0 0 0	F11M 17台 ～ (パネルマウント)				
		F						
		G						
		H						
		J						
		K						
		L						
		M						
		N						
		P						
		Q						

様式No.012-1

Mazak YAMAZAKI MAZAK CORPORATION

1	2
P	7

PN

リスト番号 LIST No.	3	8	ページ	設変
	4 2 4 0 1 R		0 2	0 1

設変 No.	部品番号 PARTS No 9–19	部品名称 PARTS NAME 英文	カタカナ	備考 REMARKS	材質 MTL	使用個数 QTY 20 A	B	C	D	E	F	G	H	J	K	L	M	N	P	Q 79	ラベルパネル 80
	D51MA00046 0	MOTOR BREAKER	MB30-SB-32A-AX	CB2	MITSUBISHI	1	1	1													
	D51MA00125 0	NB FUSE BREAKER	MB30-SB-25A-AX	CB3	〃	1	1	1													
	D01MA03316 0	MAGNETIC CONTACTOR	CB2L AC100V MSO-A12RMTP6.5A	HPMS BL-HPM	〃	1	1			1											
	D01MA03314 0	〃	CB2L AC100V MSO-A12RMTP3.3A	HPMS BL-HPM	〃		1	1													
	D43PA00052 0	SPARK KILLER	3CRM-30330		3KATA	1	1	1		2											
	D51MB00137 0	CIRCUIT PROTECTOR	BA162155 15A	CB7.	MITSUBISHI					1											
	D51MB00136 0	CIRCUIT PROTECTOR	BA162105 10A	CB5	MITSUBISHI	1	1	1													
	D51MB00133 0	〃	BA161305 3A	CB4	〃	1	1	1													
	D51MB00134 0	〃	BA161505 5A	CB6	〃	1	1	1		1											
	D51MB00132 0	〃	BA161105 1A	CB11	〃					1											
	D50NW00034 0	DC POWER SUPPLY	EC-11-24 4.8A		NEMIC LAMBDA	1	1	1		1											
	D11TQ00002 0	LIMIT SW. (ローラ)	Z-15-GQ-B	DS-1 DS-2	OMRON	2	2	2		4											
	D49HE00044 0	CONTROL TRANS	2KVA	CTR	HOTTA DENKI	1	1	1													
	4 4 1 2 6 0 9 2 1 9 0	EARTH BAR				1	1	1		2											

様式No.012-A1

Mazak YAMAZAKI MAZAK CORPORATION

1	2
P	7

リスト番号 LIST No	PN	3					8	ページ	改変
		4	2	4	0	1	R	0 3	0 1

変更 NO	部品番号 PARTS No (9–19)	部品名称 PARTS NAME 英文	カタカナ	備考 REMARKS	材質 MTL	使用個数 QTY A (20)	B	C	D	E	F	G	H	J	K	L	M	N	P	Q (79)	ランクスペアパーツ (80)
		FLUORESCENT LAMP	BF-641		MATSUSHITA	1	1	1		1											
	D17NB000020	TOGGLE SW.	S-6A	TS-1	NIHON KAIHEIKI	1	1	1													
	D56NO000500	FAN	HS4506		TOBISHI	1	1	1													
	D70NM001580	SSR BOARD	D2W102F16QA (+COM)		NIHON INTER	1	1	1													
	"		D2N103KG33QB (-COM)		"					1											
	D55MB000020	AC OUTLET	WK3001 125V 3A		MATSUSHITA	1	1	1		1											
	D53SC000850	LUG PLATE	L-3522-5P		SATO PARTS	1	1	1		1											
	D30NF000080	RESISTOR	20Ω 5W	R60	NIHON TEIKO	1	1	1		1											
	D34MA000490	DIODE	SR3AM-8	D60	MITSUBISHI	1	1	1		1											
	D04TC000010	RELAY	G2A-432A DC24V		OMRON	9	9	9		14											
	D04TC000181	RELAY SOCKET	PYF14A		"	13	13	13		3											
	D04TC001180	RELAY RETAINER	PYC-A2		"	11	11	11		3											
	D04TC000100	RELAY	LY2 DC24V		"	6	6	6		5											
	D04TC000141	RELAY SOCKET	PTF08A		"	6	6	6													
	D04TC001170	RELAY RETAINER	PYC-A1		"	6	6	6		19											
	D04TC000030	RELAY SOCKET	PY-14 (G2A)																		
	D04TC000120	"	PT-08 (LY2)							12											

様式 No.012 A 4

Mazak YAMAZAKI MAZAK CORPORATION

1	2
P	7

リスト番号 LIST No	PN	3					8	ページ	改変
		4	2	4	0	1	R	0 4	0 1

変更 NO	部品番号 PARTS No (9–19)	部品名称 PARTS NAME 英文	カタカナ	備考 REMARKS	材質 MTL	使用個数 QTY A (20)	B	C	D	E	F	G	H	J	K	L	M	N	P	Q (79)	ランクスペアパーツ (80)
	D04TC000020	RELAY	G2A-432A AC100V		OMRON	2	2	2		3											
	D06TC001430	TIMER RELAY	H3Y-4 30 min DC24V	WLNT	OMRON	1	1	1		1											
	D04TC001190	TIMER RETAINER	Y92H-3		"	2	2	2													
	D04TC001140	"	Y92H-4		"					2											
	D06TC000610	TIMER RELAY	H3Y-4 1sec DC24V	RDT	OMRON	1	1	1		1											
	D04TC001510	RELAY RETAINER	PYC-P (LY2)		"					5											
	D04TC000060	"	PYC-3 (G2A)		"					13											
	D34MA000280	DIODE	SR1FM-8		MITSUBISHI	20	20	20		33											
	D43PA000010	SPARK KILLER	CR-10201 BL		OKAYA	9	9	9		9											
	D43MB000150	SURGE ABSORBER	ERZ-C14DK201	ZNR1~3	MATSUSHITA	3	3	3		2											
	D51MA003430	MOTOR BREAKER	MB30CB-3P-10A-AC220V-F		MITSUBISHI					2											
	D51MA004110	"	MB30CB-3P-2.5A AC220V-F		"					1											
	D51MA002490	"	MB30CB-3P-25A AC220V-F		"					1											
		COOLING UNIT	850W HEAT PIPE		MITSUBISHI	1	1	1		1											

様式 No.012 A 4

Mazak YAMAZAKI MAZAK CORPORATION

PN	ページ	設変
P7		

リスト番号 LIST No: 4240 1 R 0501

設変 NO	部品番号 PARTS No	部品名称 PARTS NAME 英文	カタカナ	備考 REMARKS	材質 MTL	A	B	C	D	E	F	G	H	J	K	L	M	N	P	Q	ラベル 80
	D26FA000050	SELECT KEY SW.	AM25-J2A11A	SS-41	FUJI	1	1	1		1											
	D20FA000820	PILOT LAMP	AM25-ZMR BC30V	PL-41	"	1	1	1		1											
	D20KC000250	BULB	BA9S/13 30V 1W		KIMUDEN	1	1	1		1											
	4116259090	EARTH STICKER				1	1	1													
	D56	COOLING FAN	TS 450C		TOYO DENKI					3											
	D56	FINGER GUARD	T-30F		"					3											
	D56TY000530	COOLING FAN	T6500G1-F21		"					2											
	D56TY000540	FINGER GUARD	TA-33C		"					2											
		TERMINAL BLOCK	ATL-100 4P+ATL30 6P +CTL-15 32P	TB1	TOYO GIKEN					1											
		"	ATL 20 5P+CTL15 30P	TB6	"					1											
	D53TD001990	"	CTL15-45P	TB5	"					1											
	D53TD001960	"	CTL15 30P	TB11, 12	"					2											
	D53TD001940	TERMINAL BLOCK	CTL-15 20P	TB5	TOYO GIKEN	1	1	1													
		"	CTL-15×5P+ATL-30 ×2P	TB6	"	1	1	1													
	D53TD002000	"	CTL-15 50P	TB11 TB12	"	2	2	2													
	D60HD001370	CONNECTOR	MR20RMW	for T.U.	HONDA					6											
	D60HD001390	CONNECTOR	MR50RMW	for T.U.	HONDA TSUSHIN	21	21	21		14											
	D53MA000620	TERMINAL BLOCK	TE-K2W GP	for T.U.	"	1	1	1		1											

様式 No.012 A 4

Mazak YAMAZAKI MAZAK CORPORATION

PN	ページ	設変
P7		

リスト番号 LIST No: 4240 1 R 0601

設変 NO	部品番号 PARTS No	部品名称 PARTS NAME 英文	カタカナ	備考 REMARKS	材質 MTL	A	B	C	D	E	F	G	H	J	K	L	M	N	P	Q	ラベル 80	81
	D51MA001710	EARTH LEAKAGE BREAKER	NV100 SA-3P-100A-200V-200mA -TBL-F		MITUBISHI				1													
	D60HD002750	CONNECTOR	MR50 FW	C01~C04 C09~C12	HONDA TSUSHIN					8												
	D60HD002770	"	MR20 FW	C05, C13	"					2												
	D60HD002410	"	MR50RMD	CNRA, CNRB	"					2												

様式 No.012 A 4

1	2
U	7

UN

機種	424 VQC-15/40	PARTS LIST	ユニット	HEAD LUBE	LIST No	4 2 4 0 2 R	ページ 0 1	設変 0 3	全頁数 4

変更No 技術No	識別 9 10	区分 SEC. 11	ユニット番号 UNIT No 12–22	SPECIFICATION OF UNIT	~~組図 No.~~	~~リスト No.~~	SET No	変更処理日
		A	7 4 2 4 0 2 0 1 0 0 0	OIL CHILLER (AKS-103Y)	STANDARD			
		B	0 2 0 0 0	FIIM 105Q JPN				
		C	0 3 0 0 0	〃 YMC				
		D	0 4 0 0 0	〃 YME				
		E	0 5 0 0 0	OIL AIR (10,000Y.P.m.)				
		F	0 6 0 0 0	FIIM 115～ (パネルマウント)				
		G						
		H						
		J						
		K						
		L						
		M						
		N						
		P						
		Q						

書式No.012-1

Mazak YAMAZAKI MAZAK CORPORATION

1	2
P	7

PN

リスト番号 LIST No	4 2 4 0 2 R	ページ 0 2	設変 0 0

設変	部品番号 PARTS No 9–19	部品名称 PARTS NAME 英文	カタカナ	備考 REMARKS	メーカ ~~特殊~~ ~~UTIL~~	使用個数 QTY 20	B	C	D	E	F	G	H	J	K	L	M	N	P	Q 79	スペアパーツ 80	81
	D51MA00047 0	MOTOR BRAKER	MB30-CB3P3.7kW16A	CB4	MITUBISHI	1																	
	D64ND00004 0	NIPOLEX TUBE	VF-6		NIPPON FLEX	3 m																	
	D64ND00025 0	BOX CONNECTOR	VFC-106		NIPPON FLEX	2																	
	D62DB00052 0	WIRE	KIV 2sq BLACK		DAINICHI	10 m																	
	D62DB00069 0	do.	KIV 1.25sq RED		do.	12 m																	
	D62FE00079 0	do.	KIV 2sq Y/G		FUJIKURA	3 m																	
	D62SA00103 0	do.	IRRAX A-0.75sq BLUE			12 m																	

書式No.012-3-1

Mazak YAMAZAKI MAZAK CORPORATION

1	2
P	7

PN

リスト番号 LIST No: 4 2 4 0 2 R 0 3 0 1

設変 NO	部品番号 PARTS No (9–19)	部品名称 PARTS NAME 英文	カタカナ	備考 REMARKS	材質 MTL	使用個数 QTY A	B	C	D	E	F	G	H	J	K	L	M	N	P	Q (20–79)	ランクスペアパーツ (80)
	D01MA033100	MAGNETIC CONTACTOR	MSO-A12RMTP1.2A AC100V	MOMS BL-MOM	MITSUBISHI		1	1			1										
	D01MA033090	"	MSO-A12RMTP0.6A AC100V	MOMS BL-MOM	"			1	1												
	D43PA000010	SPARK KILLER	CR-10201 BL	S-5	OKAYA		1	1	1		1										
	D43PA000520	"	3CRM-30330	3S-3	"		1	1	1		1										

Mazak YAMAZAKI MAZAK CORPORATION

1	2
P	7

PN

リスト番号 LIST No: 4 2 4 0 2 R 0 4 0 0

設変 NO	部品番号 PARTS No (9–19)	部品名称 PARTS NAME 英文	カタカナ	備考 REMARKS	~~材質~~ メーカ ~~MTL~~	使用個数 QTY A	B	C	D	E	F	G	H	J	K	L	M	N	P	Q (20–79)	ランクスペアパーツ (80)	(81)
	D51MA003070	CIRKIT PROTECTOR	CP-B1PA-M10A 1/2		MITUBISHI					1												
	D43MB000150	VARISTOR.	ERZ-C14DK201		MATUSHITA					1												
	D64ND000670	90° BOX CONNECTOR	VFC-306		NIPPON FLEX					4												
	D63ND000040	NIPOLEX TUBE	VF-6		do.					5 m												
	D61DB000440	TWIST PAIR SHIELD	2C×0.5sq							3 m												

1	2
U	7

UN

SH-036

機種	424 VQC-15/40	PARTS LIST	ユニット	COOLANT	LIST No	4 2 4 0 3 R	ページ 0 1	設変 0 3	全頁数 3

変更No 技術No	識別 9 10	区分 SEC. 11	ユニット番号 UNIT No 12									22	SPECIFICATION OF UNIT	~~組図 No.~~	~~リスト No.~~	SET No	変更処理日
		A	7	4	2	4	0	3	0	1	0	0	0	POWERFUL COOLANT				
		B							0	2	0	0	0	FIIM COOLANT std. JPN	10台口			
		C							0	3	0	0	0	〃 YMC	〃			
		D							0	4	0	0	0	〃 YME	〃			
		E							0	5	0	0	0	〃 〃 250W	11台 ～	(パネルマウント)		
		F							0	6	0	0	0	〃 〃 (POWERFUL COOLANT) 750W	〃 (OPTION)	(〃)		
SH-036	UA	G							0	7	0	0	0	LARGE CAPACITY COOLANT 7.5KW				2/28 -'86
		H																
		J																
		K																
		L																
		M																
		N																
		P																
		Q																

書式No.012-1

Mazak YAMAZAKI MAZAK CORPORATION

1	2
P	7

PN

SH-036

リスト番号 LIST No	4 2 4 0 3 R	ページ 0 2	設変 0 1

設変 N	部品番号 PARTS No 9	19	部品名称 PARTS NAME 英文	カタカナ	備考 REMARKS	~~メーカ~~ ~~材質~~ MATL	使用個数 QTY 20 Ⓐ	B	C	D	E	F	Ⓒ	H	J	K	L	M	N	P	Q 79	スペアパーツ 80	81
	D03MA005191		THERMAL	TH12RMTP 3.3A	OL-CM	MITSUBISHI	1																
	D01MA033160		MAGNETIC CONTACTOR	MSOA12RMTP AC100V 6.5A	PCMS								1										
	D43PA000010		SPARK KILLER	CR-10201BL	3S-5	ŌKAYA							1										
	D43PA000520		〃	3CRH-30330	S-PC	〃							1										
	D51MA000471		BREAKER	MB30-CB-3P 16A	CB4	MITSUBISHI							1										

書式No.112 A 1

Mazak YAMAZAKI MAZAK CORPORATION

1	2
P	7

PN

リスト番号 LIST No: 3 K 2 K 0 3 R 8

ページ設変: 0 3 0 1

設変	部品番号 PARTS No (9–19)	部品名称 PARTS NAME 英文	カタカナ	備考 REMARKS	材質 MTL	A	B	C	D	E	F	G	H	J	K	L	M	N	P	Q	スペアパーツ (20–79)	80
	D01MA033110	MAGNETIC CONTACTOR	MSO-A12RMTP AC100V 1.2A	CMS OL-CM	MITSUBISHI		1	1		1												
	D01MA033090	〃	MSO-A12RMTP AC100V 0.6A	CMS OL-CM	〃			1	1													
	D01MA033140	〃	〃 3.3A	〃	〃						1											
	D01MA033160		〃 6.5A	〃	〃																	
	D43PA000010	SPARK KILLER	CR-10201 BL	S-6	OKAYA		1	1	1	1	1											
	D43PA000520	〃	3CRM-30330	3S-2	〃		1	1	1	1	1											

1	2
U	7

UN

機種	424 VQC-15/40	PARTS LIST	ユニット	NC, SERVO AMP	LIST No.	3 4 5 6 7 8	ページ	設変	全頁数
						4 2 4 0 4 R	0 1	0 1	2

変更No 技術No	識別 9 10	区分 SEC. 11	ユニット番号 UNIT No 12–22	SPECIFICATION OF UNIT	組図 No.	リスト No.	SET No	変更処理日
		A	7 4 2 4 0 4 0 1 0 0 0	FIIM 10台 std. JPN.				
		B	0 2 0 0 0	〃 EX.				
		C	0 3 0 0 0	FIIM 11台~ std JPN	(パネルマウント)			
		D	0 4 0 0 0	〃 EX.	(〃)			
		E						
		F						
		G						
		H						
		J						
		K						
		L						
		M						
		N						
		P						
		Q						

書式No.012-1

Mazak YAMAZAKI MAZAK CORPORATION

1	2
P	7

PN

リスト番号 LIST No	3 8	ページ	設変
	4 2 4 0 4 R	0 2	0 1

設変	部品番号 PARTS No 9–19	部品名称 PARTS NAME 英文	カタカナ	備考 REMARKS	材質 MTL	使用個数 QTY 20 A	B	C	D	E	F	G	H	J	K	L	M	N	P	Q 79	ラインスペアパーツ 80	81
		NC	FSIIMA BUILT IN 2-2		FANUC	1	1															
		NC TRANS			〃		1															
		NC	FSIIMA UNBUNDLED TYPE					1	1													
		SERVO UNIT	AC #5		FANUC	3	3	3	3													
		SERVO TRANS	ACE (5KVA)		〃	1	1															
		INPUT UNIT			〃			1	1													
		CONNECTION UNIT 1			〃			1	1													
		〃 2			〃			1	1													
		OPERATING CONNECTION UNIT			〃			1	1													
		MDI/CRT UNIT	9 INCH TYPE		〃			1	1													
		TAPE READER UNIT			〃			1	1													
		CONCENTRATION TRANS.	8 KVA		〃			1														
		〃	30 KVA		〃				1													

書式No.012-A-1

1	2
U	7

UN

機種	ユニット	LIST No	3	4	5	6	7	8	ページ	設変	全頁数
424 VOC-15/40	CONTROLLER		4	2	4	0	6	R	0	1	0	1	2

PARTS LIST

変更No 技術No	識別 9 10	区分 SEC. 11	ユニット番号 UNIT No 12–22	SPECIFICATION OF UNIT	組図 No.	リスト No.	SET No	変更処理日
		A	7424060100 00	F11M 1050 std JPN.				
		B	02000	〃 EX.				
		C	03000	F11M 11台～	パネル マウント タイプ			
		D						
		E						
		F						
		G						
		H						
		J						
		K						
		L						
		M						
		N						
		P						
		Q						

書式No.012-1

Mazak YAMAZAKI MAZAK CORPORATION

1	2
P	7

PN

リスト番号 LIST No	3	4	5	6	7	8	ページ	設変
	4	2	4	0	6	R	0	2	0	1

設変 NO	部品番号 PARTS No 9–19	部品名称 PARTS NAME 英文	カタカナ	備考 REMARKS	材質 MTL	使用個数 QTY A (20)	B	C	D	E	F	G	H	J	K	L	M	N	P	Q (79)	スペアパーツ 80	81
	080FC00049 0	SPINDLE CONTROLLER	AC #3		FANUC	1	1															
	049FC00158 0	SPINDLE TRANS	15KVA A80L-0001-0353		〃		1															
		SPINDLE CONTROLLER	AC #3	水部放熱タイプ	〃			1														

書式 No.012 A 4

1	2
U	7

UN

424 SH-036

3	4	5	6	7	8	ページ	設変
4	2	4	0	8	R	0 1	0 2

機種	424	PARTS LIST	ユニット	OPERATING PANEL	LIST No	全頁数
						6

変更No 技術No	識別 9 10	区分 SEC. 11	ユニット番号 UNIT No 12–22	SPECIFICATION OF UNIT	組図 No.	リスト No.	SET No	変更処理日
		A	7 4 2 4 0 8 0 1 0 0 0	FILM 1050				
		B	0 2 0 0 0	11号 ~ STANDARD	(パネルマウント)			
		C	0 3 0 0 0	〃 with MONITOR C	(〃)			
		D	0 4 0 0 0	〃 with MONITOR B	(〃)			
H036	UA	E	0 5 0 0 0	HANDY MANUAL PULSE GENERATOR x1				2/28 -'86
1-036	UA	F	0 6 0 0 0	HANDY MANUAL PULSE GENERATOR x3				2/28 -'86
		G						
		H						
		J						
		K						
		L						
		M						
		N						
		P						
		Q						

書式No.012-1

Mazak YAMAZAKI MAZAK CORPORATION

1	2
P	7

PN

リスト番号 LIST No	3	4	5	6	7	8	ページ	設変
	4	2	4	0	8	R	0 2	0 1

設変	部品番号 PARTS No 9–19	部品名称 PARTS NAME 英文	カタカナ	備考 REMARKS	材質 MTL	使用個数 QTY A	B	C	D	E	F	G	H	J	K	L	M	N	P	Q	スペアパーツ 80	R
	D21PA000020	LED	BD-703G		OKAYA	16																
	D21PA000010	〃	BD-701R		〃	6																
	D21PA000030	〃	BD-709Y			1																
	D17NB000370	TOGGLE SW.	M2032W		NIHON KAIMEIKI	1	1															
	D17NB000320	〃	M2012W		〃	11	11	13	13													
	D17NB000330	〃	M2013W		〃	3	3	3	3													
	D17NB000230	CAP	AT-428		〃	15	13	15	15													
	D17NB000250	NUT	AT-501		〃	15	13	15	15													
	D15NB000860	PUSH BOTTON SW.	MB-2011W		〃	1		1	1													
	D15FA000221	〃	AH25-FG10		FUJI	3	2	2	2													
	D15FA000271	〃	AH25-FR01		〃	1	1	1	1													
	D15FA000231	〃	AH25-ER01		〃	1	1	1	1													
	D15FA000070	〃	RC4470-VR1		〃	1	1	1	1													
	D15FA000240		AH25-FB10																			
	D21PA000050	LED (GREEN)	BD-1402G		OKAYA		11	14	18													
	D21PA000040	(RED)	BD-1401R		〃		4	7	7													
	D21PA000100	(ORANGE)	BD-1403A		〃		1	1	1													

書式 No.012 A 4

Mazak YAMAZAKI MAZAK CORPORATION

1	2
P	7

PN

リスト番号 LIST No: 4 2 4 0 8 R 0 3 0 1

NO		部品番号 PARTS No (9–19)	部品名称 PARTS NAME 英文	カタカナ	備考 REMARKS	材質 MTL	A	B	C	D	E	F	G	H	J	K	L	M	N	P	Q	ランクスペアパーツ 80	81
		D13TI001020	SELECT SW.	SS-1021A1-22		TEC	1	1	1	1													
		D14TI000050	〃	SS-1034B1-11			1	1	1	1													
		D26FA000100	SELECT KEY SW.	AH25-J2A11		FUJI																	
		D26FA000110	〃	AH25-J2A22		〃	1	1	1	1													

20 … 79

様式 No.012 A 4

Mazak YAMAZAKI MAZAK CORPORATION

1	2
P	7

PN

リスト番号 LIST No: 4 2 4 0 8 R 0 4 0 1

NO		部品番号 PARTS No (9–19)	部品名称 PARTS NAME 英文	カタカナ	備考 REMARKS	材質 MTL	A	B	C	D	E	F	G	H	J	K	L	M	N	P	Q	ランクスペアパーツ 80	81
		D18FB000040	ROTARY SW.	261AUSCH311aa	UP. SPEED OVERRIDE FEEDFD. FEEDRATE	FUJITSU	3	3	3	3													
		D18FB000030	〃	261AUSCH311aa	AXIS. INCREMENTAL MODE	〃	3	3	3	3													
		D18FB000080	ROTARY SW.	261AUSCH211aa	RAPID TRAV.	〃	1	1	1	1													
		D18YC000140	ROTARY SW. PLATE	スイッチ取付板			7	7	7	7													
		D18YC000150	SCREW SHAFT	スイッチ防水おねじ			7	7	7	7													
		D18YC000160	SWITCH SHAFT	スイッチ操作軸			7	7	7	7													
		D18YC000170	O-RING	P-7			7	7	7	7													
		D18FA000120	GUARD RING	TYPE P30φ		FUJI	7	7	7	7													
		D56KM000300	SPACER	40φ×L10 ST			7	7	7	7													
		D13IA000520	Y-HANDLE	TYPE "Y" BLACK			7	7	7	7													
		D18FB000230	KNOB	R. DIST. 60A		FUJITSU	7	7	7	7													
		D30MB001090	RESISTOR	150Ω 1/2W		NIHON TEIKO	18	14	22	26													
			〃	470Ω 1/2W		〃	6																
		D53SC000880	LUG PLATE	L-3522-15P		SATO PARTS		2	2	2													
		D19FA000040	PUSH BUTTON SW.	AH25-L2G20		FUJI	1	1	1	1													
		D19FA000090	〃	AH25-L2R02		〃	1	1	1	1													
		D20FA000250	BULB	BAS/13 30V 1W		KIMUDEN	2	2	2	2													

20 … 79

様式 No.012 A 4

Mazak YAMAZAKI MAZAK CORPORATION

1	2
P	7

PN

リスト番号 LIST No: 4 2 4 0 8 R 0 5 0 1 (ページ設変)

NO	部品番号 PARTS No	英文 PARTS NAME	カタカナ	備考 REMARKS	材質 MTL	A	B	C	D	E	F	G	H	J	K	L	M	N	P	Q	スペアパーツ 80	81
	D22MA000010	SPEED METER	6.000r.p.m. YM-206F 1mA		MITSUBISHI	1	1	1	1													
	D17NB000010	TOGGLE SWITCH	S-21AW		NIHON KAIHEIKI	1																
	D17NB000190	CAP	AT-402		〃	1																
	D26FA000130	SELECT KEY SWITCH	AH25-J2D01A		FUJI	1	1	1	1													
	D55MB000040	AC OUTLET	WF3002E 125V15A		MATSUSHITA	1	1	1	1													
	D21PA000030	LED	BD-709Y		ŌKAYA	1																
	D51MA003050	CIRCUIT PROTECTOR	CP-S1PA1-M24N	CB7	MITSUBISHI	1	1	1	1													
	D22TZ000250	AM METER	DEF-54SY 1mA	LOAD METER	TOYO KEIKI		1															
		PRINT BOARD	IZME-Y513		IZUMI KOGYO		1															
	D29TN000130	VOLUME	RV16YN10SB 10kΩ		SATO PARTS		3	2	2													
	D30MB001070	RESISTOR	4.7kΩ 1/2W		MATSUSHITA		2	2	2													
	D30MB000450	〃	1kΩ 1/2W		〃		1															

様式 No.012 A 4

Mazak YAMAZAKI MAZAK CORPORATION

1	2
P	7

PN SH-036

リスト番号 LIST No: 4 2 3 0 8 R 0 6 0 0 (ページ設変)

NO	部品番号 PARTS No	英文 PARTS NAME	カタカナ	備考 REMARKS	~~材質~~ メーカー	A	B	C	D	E	F	G	H	J	K	L	M	N	P	Q	スペアパーツ 80	81
	D18FB000380	ROTARY SWITCH	U.sch 111aa		FUJI																	
	D18FB000220	KNOB	Uantr 2a		〃																	
	D65MA001596	MANUAL PULSE GENERATOR	HD5ZA		MITSUBISHI						2											
	D17NB000770	TOGGLE SWITCH	S-3B		NIHON KAIHEIKI						1											
	D17NB000260	TOGGLE SWITCH	S-302		〃						1											
	D17NB000190	CAP -	AT-402		〃						2											
		CABLE	40000009-J202A		YAMAZAKI					1												
		〃	40000009-J203A		〃					1												
		〃	40000009-J204		〃						1											
		〃	40000009-J205A		〃						1											

様式 No.012 A 4

1	2
U	7

UN

機種	424 VQC-15/40	PARTS LIST	ユニット	WIRING PARTS ON MACHINE	LIST No	3 4 5 6 7 8	ページ	設変	全頁数
						4 2 4 0 9 R	0 1	0 2	6

変更No 技術No (9 10)	識別	区分 SEC. (11)	ユニット番号 UNIT No (12–22)	SPECIFICATION OF UNIT	~~組図 No.~~ ~~リスト No.~~	SET No	変更処理日
		A	7 4 2 4 0 9 0 1 0 0 0	STANDARD (FOR TRIAL MACHINE)			
		B	2 0 0 0	STANDARD			
		C	3 0 0 0	F11M 10台.			
		D	4 0 0 0	INDIRECT COOLING CABINET			
		E	5 0 0 0	F11M 11台～	(パネルマウント)		
		F					
		G					
		H					
		J					
		K					
		L					
		M					
		N					
		P					
		Q					

書式No.012-1

Mazak YAMAZAKI MAZAK CORPORATION

1	2
P	7

PN

リスト番号 LIST No	3 8	ページ	設変
	4 2 4 0 9 R	0 2	0 1

設変	部品番号 PARTS No (9–19)	部品名称 PARTS NAME 英文	カタカナ	備考 REMARKS	~~材質~~ ~~MTL~~	使用個数 QTY (20–79) A	B	C	D	E	F	G	H	J	K	L	M	N	P	Q	スペアパーツ 80	81
	D537D00327 0	TERMINAL BLOCK	ATL-20 15P	TB41	TOYOGIKEN	1	1															
	D537D00303 0	〃	CTL-15 80P	TB41, TB51	〃	2	2		1	1												
	D537D00316 0	〃	CTL-15 20P	〃	〃	1	1		2	2												
	D43PA00001 0	SPARK KILLER	CR 10201		OKAYA	3	3	4	3	3												
	D63ND00001 0	FLEXIBLE TUBE	VF-2		NIPPON FLEX	5m	5m	5m	5m	5m												
	D63ND00002 0	〃	VF-3		〃	5m	5m	5m	5m	5m												
	D63ND00003 0	〃	VF-4		〃	20m	15m	15m	15m	15m												
	D63ND00004 0	〃	VF-6		〃	15m	5m	5m	5m	5m												
	D63ND00005 0	〃	VF-8		〃	15m	8m	8m	8m	8m												
	D63ND00007 0	〃	VF-10		〃	5m	1.5m	1.5m	1.5m	1.5m												
	D64ND00026 0		VFC-108						3	3												
	D64ND00025 0	BOX CONNECTOR	VFC-106		NIPPON FLEX			1	1	1												
	D64ND00022 0		VFC-102		NIPPON FLEX	2	2	6	2	2												
	D64ND00024 0	〃	VFC-104		〃	1	2	1	2	2												
	D64ND00023 0	〃	VFC-103		〃		1	1	1	1												
	D64ND00043 0	BOX CONNECTOR 45°	VFC-202		NIPPON FLEX	2	2	4	2	2												
	D64ND00044 0	〃	VFC-203		〃	2	3	4	3	3												
	D64ND00045 0	〃	VFC-204		〃	6	6	7	6	6												
	D64ND00046 0	〃	VFC-206		〃	1	1	2	1	1												

書式No.012-1

Mazak YAMAZAKI MAZAK CORPORATION

PN	1	2
	P	7

リスト番号 LIST No	3–8	ページ	設変
	424 09R	03	01

NO	部品番号 PARTS No (9–19)	部品名称 PARTS NAME 英文	カタカナ	備考 REMARKS	メーカ ~~材質~~ ~~MATL~~	使用個数 QTY (20–79) A	B	C	D	E	F	G	H	J	K	L	M	N	P	Q	ランクパーツ (80)	(81)
	D64ND00047 0	BOX CONNECTOR 45°	VFC-208		NIPPON FLEX	3	1	4	1	1												
	D64ND00048 0	〃	VFC-210		〃	2	1		1	1												
	D64ND00065 0	BOX CONNECTOR 90°	VFC-303		NIPPON FLEX	2	3	2	3	3												
	D64ND00066 0	〃	VFC-304		〃	6	5	4	5	5												
	D64ND00067 0	〃	VFC-306		〃	2	2	3	2	2												
	D64ND00068 0	〃	VFC-308		〃	3	3	5														
	D64ND00069 0	〃	VFC-310		〃	2	1		1	1												
	D64ND00086 0	CONBINATION CONNECTOR	PSF-104-CA2022		NIPPON FLEX	7	7	6	10	10												
	D64ND00090 0	〃	PSF-106-CA2428		〃				1	1												
	D64ND00087 0	〃	PSF-104-CA18		〃					3												

書式 No.012 A 4

Mazak YAMAZAKI MAZAK CORPORATION

PN	1	2
	P	7

リスト番号 LIST No	3–8	ページ	設変
	424 09R	04	01

設変 NO	部品番号 PARTS No (9–19)	部品名称 PARTS NAME 英文	カタカナ	備考 REMARKS	メーカ ~~材質~~ ~~MATL~~	使用個数 QTY (20–79) A	B	C	D	E	F	G	H	J	K	L	M	N	P	Q	ランクパーツ (80)	(81)
	D62DB00048 0	WIRE	KIV 1.25sq BLACK		DAINICHI DENSEN	40 m	40 m	40 m	40 m	40 m												
	D62DB00052 0	〃	KIV 2sq 〃		〃	50 m	50 m	50 m	50 m	50 m												
	D62DB00056 0	〃	KIV 3.5sq 〃		〃	60 m	60 m	60 m	60 m	60 m												
	D62DB00058 0	〃	KIV 5.5sq 〃		〃	40 m	40 m	40 m	40 m	40 m												
	D62DB00060 0	〃	KIV 8sq 〃		〃	20 m	20 m	20 m	20 m	20 m												
	D62DB00068 0	WIRE	KIV 0.75sq RED		〃	150 m	150 m	150 m	150 m	150 m												
	D62DB00069 0	〃	KIV 1.25sq 〃		〃	30 m	30 m	30 m	30 m	30 m												
	D62DB00067 0	〃	KIV 2sq 〃		〃	30 m	30 m	30 m	30 m	30 m												
	D62DB00043 0	〃	KIV 0.75sq BLUW		〃	30 m	30 m	30 m	30 m	30 m												
	D62SA00103 0	〃	IRRAX A-0.75sq BLUE			40 m	40 m	40 m	40 m	40 m												
	D62FE00078 0	〃	KIV 1.25sq Y/G		FUJIKURA DENSEN	10 m	10 m	10 m	10 m	10 m												
	D62FE00079 0	〃	KIV 2sq Y/G		〃	25 m	25 m	25 m	25 m	25 m												
	D62FE00080 0	〃	KIV 3.5sq Y/G		〃	30 m	30 m	30 m	30 m	30 m												
	D61DB00001 0	〃	VCT-2C 0.75sq		DAINICHI DENSEN	50 m	50 m	50 m	50 m	50 m												

書式 No.012 A 4

Mazak YAMAZAKI MAZAK CORPORATION

1	2
P	7

PN

リスト番号 LIST No 3–8: 4 2 4 0 9 R 0 5 0 1 ページ 設変

設変 NO	部品番号 PARTS No (9–19)	部品名称 PARTS NAME 英文	カタカナ	備考 REMARKS	材質 MTL	使用個数 QTY A	B	C	D	E	F	G	H	J	K	L	M	N	P	Q (79)	ランクスペアパーツ (80)	(81)
	D53TD002020	TERMINAL BLOCKS	CTL-15×60P	TB41	TOYO GIKEN			1														
		〃	ATL-20×11P	〃	〃			1														
	D53TD001980	〃	CTL-15×40P	TB51	〃			1														
	D53TD003290	〃	ATL-100×1P	TB-0 TRANS BOX	〃			1		1												
	D51MA000130	NO FUSE BREAKER	NF100S-3P-100A 600V SHT. AC100V	CB1	MITSUBISHI			1														
	D51MA002350	OPERATING HANDLE	07FA		〃																	
	D51MA003900	NO FUSE BREAKER	NF225S-3P-125A 600V SHT. AC100V	CB1						1												
	D51MA000330	OPERATING HANDLE	13FA							1												

書式 No.012 A 4

Mazak YAMAZAKI MAZAK CORPORATION

1	2
P	7

PN

リスト番号 LIST No 3–8: 4 2 4 0 9 R 0 6 0 1 ページ 設変

設変 NO	部品番号 PARTS No (9–19)	部品名称 PARTS NAME ~~英文~~	~~カタカナ~~	備考 REMARKS	~~材質~~ ~~MTL~~	使用個数 QTY A	B	C	D	E	F	G	H	J	K	L	M	N	P	Q (79)	ランクスペアパーツ (80)	(81)
	D60DA003180	MS CONNECTOR	MS3102A 24-11S	CA1	DAIICHI DENSHI				1	1												
	D60DA003870		20-15S	CA2					1	1												
	D60DA001000		28-20S	CA3					1	1												
	D60DA003200		32-7S	CA4					1	1												
	D60DA000230		20-29S	CA15 CA16 CA18					3	3												
	D60DA000300		28-21S	CA17					1	1												
	D60DA003220		MS3106B 24-11P						1	1												
	D60DA003880		20-15P						1	1												
	D60DA001010		28-20P						1	1												
	D60DA003240		32-7P						1	1												
	D60DA000490		20-29P						3	3												
	D60DA000580		28-21P						1	1												
	D60MJ003940	MOLEX CONNECTOR	3191-15R		MOLEX				2	2												
	D60MJ003920		3191-06R						1	1												
	D60MJ003950		3191-15P						2	2												
	D60MJ003930		3191-06P						1	1												
	D60MJ001740	CONTACT	1189TL						36	36												
	D60MJ001750	〃	1190TL						36	36												

書式 No.012 A 1

1	2
U	7

UN

機種	424 VQC-15/40	PARTS LIST	ユニット	CABLE	LIST No	3 4 5 6 7 8	ページ	設変	全頁数
						4 2 4 1 0 R	0 1	0 1	2

変更No 技術No	識別 9 10	区分 SEC. 11	ユニット番号 UNIT No 12–22	SPECIFICATION OF UNIT	~~組図 No.~~ ~~リスト No.~~	SET No	変更 処理日
		A	7424100 01000	STANDARD (MZ)			
		B	02000	STANDARD (MZV)			
		C	03000	F11M 10台口 標準			
		D	04000	〃 2PC付			
		E	05000	F11M 11台～	パネルマウント		
		F					
		G					
		H					
		J					
		K					
		L					
		M					
		N					
		P					
		Q					

書式No.012-1

Mazak YAMAZAKI MAZAK CORPORATION

1	2
P	7

PN

リスト番号 LIST No	3 8	ページ	設変
	4 2 4 1 0 R	0 2	0 1

設変	部品番号 PARTS No 9–19	部品名称 PARTS NAME 英文	カタカナ	備考 REMARKS	~~メーカ品番~~ ~~NTI~~	使用個数 QTY 20 A	B	C	D	E	F	G	H	J	K	L	M	N	P	Q 79	スペアパーツ 80	81
	D71424AY010	NC CABLE LIST				1																
	D71424AY011	NC CABLE LIST					1															
	D71424AY020	〃	F11M 10台口 標準		⊗			1														
	D71424AY030	〃	〃 2PC付		⊗				1													
	D71424AY040	〃	F11M 11台～	(パネルマウント)	⊗					1												

書式No.012-3

1	2
U	7

UN

機種	424 VQC-15/40	PARTS LIST	ユニット	SW. OF MACHINE SIDE	LIST No	3 4 5 6 7 8	ページ	設変	全頁数
						4 2 4 1 1 R	0 1	0 0	2

変更No 技術No	識別 9 10	区分 SEC. 11	ユニット番号 UNIT No 12–22	SPECIFICATION OF UNIT	~~組図 No.~~	~~リスト No.~~	SET No	変更処理日
		A	7 4 2 4 1 1 0 1 0 0 0	STANDARD				
		B	0 2 0 0 0	FILM std.				
		C						
		D						
		E						
		F						
		G						
		H						
		J						
		K						
		L						
		M						
		N						
		P						
		Q						

書式No.012-1

Mazak YAMAZAKI MAZAK CORPORATION

1	2
P	7

PN

リスト番号 LIST No	3 8	ページ	設変
	4 2 4 1 1 R	0 2	0 0

設変No	部品番号 PARTS No 9–19	部品名称 PARTS NAME 英文	カタカナ	備考 REMARKS	メーカ ~~材質~~ ~~MATL~~	使用個数 QTY 20 A	B	C	D	E	F	G	H	J	K	L	M	N	P	Q 79	スペアパーツ 80	81
	D15FA00024 0	PUSH BUTTON SW.	AH25-FB10	PB-32	FUJI	1	1															
	D15FA00007 0	PUSH LOCK SW.	RCa470-VR1	PB-3B		1	1															
	D64YC00243 0	HANDY SW. BOX	AGA310		YAMAZAKI	1	1															

書式No.012-1

1	2
U	7

UN

機種	424 VQC-15/40	PARTS LIST	ユニット	CHIP CONVEYOR	LIST No	3 4 5 6 7 8: 4 2 4 1 2 R	ページ: 0 1	設変: 0 2	全頁数: 3

変更No 技術No (9 10)	識別	区分 SEC. (11)	ユニット番号 UNIT No (12–22)	SPECIFICATION OF UNIT	~~組図 No.~~	~~リスト No.~~	SET No	変更処理日
		A	7 4 2 4 1 2 0 1 0 0 0	CHIP CONVEYOR (FOR TRIAL MACHINE)				
		B	2 0 0 0	CHIP CONVEYOR (STANDARD)				
		C	3 0 0 0	CHIP CONVEYOR JPN.	FIM 10台			
		D	4 0 0 0	〃 YMC	〃			
		E	5 0 0 0	〃 YME	〃			
		F	6 0 0 0	〃	F1/M 11台 ～1ラインカット			
		G						
		H						
		J						
		K						
		L						
		M						
		N						
		P						
		Q						

書式No.012-1

Mazak YAMAZAKI MAZAK CORPORATION

1	2
P	7

PN

リスト番号 LIST No	3 4 5 6 7 8: 4 2 4 1 2 R	ページ: 0 2	設変: 0 1

設変	部品番号 PARTS No (9–19)	部品名称 PARTS NAME 英文	カタカナ	備考 REMARKS	~~メーカ~~ ~~MFR~~	使用個数 QTY (20–79) A	B	C	D	E	F	G	H	J	K	L	M	N	P	Q	スペアパーツ (80)	(81)
	D01MA033090	MAGNET CONTACTOR	MSO-A12RMTP-06A -AC100V	CCMS	MITSUBISHI	1	1															
	D43PA000520	SPARK KILLER	3CRH-30330	3S-4	OKAYA	1	1															
	D43PA000560	〃	AU1201	S-4	〃	1	1															
	D63ND000020	FLEXIBLE TUBE	VF-3		NIPPON FLEX	6m	6m	6m	6m	6m	6m											
	D64ND000230	BOX CONNECTOR	VFC-103		〃	3	1	1	1	1	1											
	D64ND000440	〃 45°	VFC-203		〃	1	1	1	1	1	1											
	D62DB000520	WIRE	KIV 2SQ BLAK		DAINICHI	20m	40m	40m	40m	40m	40m											
	D62FE000790	〃	KIV 2SQ Y/G		FUJIKURA	7m	7m	7m	7m	7m	7m											
	D63ND000030	FLEXIBLE TUBE	VF-4		NIPPON FLEX		3m	3m	3m	3m	3m											
	D64ND000240	BOX CONNECTOR	VFC-104		〃		1	1	1	1	1											
	D64ND000450	〃 45°	VFC-204		〃		1	1	1	1	1											

Mazak YAMAZAKI MAZAK CORPORATION

	1	2
	P	7

PN

リスト番号 LIST No	3					8	ページ	設変
	4	2	4	1	2	R	0 3	0 0

設変	部品番号 PARTS No (9–19)	部品名称 PARTS NAME 英文	カタカナ	備考 REMARKS	材質 MTL	使用個数 QTY A	B	C	D	E	F	G	H	J	K	L	M	N	P	Q (20–79)	ランダムスペアパーツ (80)
	D01MA033090	MAGNETIC CONTACTOR	MSO-A12RMTP AC100V 0.6A	CCMS ZL-CCM	MITSUBISHI			1	1		1										
	D01MA033080	〃	MSO-A12RMTP AC100V 0.4A	CCMS ZL-CCM	〃				1	1											
	D43PA000010	SPARK KILLER	CR-10201BL		OKAYA			1	1	1	1										
	D43PA000520	〃	3CRM-30330		〃			1	1	1	1										

1	2
U	7

UN

機種	424 VGC-15/40	PARTS LIST	ユニット	YME OPTION	LIST No	3 4 5 6 7 8	ページ	設変	全頁数
						4 2 4 1 7 R	0 1	0 2	2

変更No 技術No	識別 9 10	区分 SEC. 11	ユニット番号 UNIT No 12 22	SPECIFICATION OF UNIT	~~組図 No.~~	~~リスト No.~~	SET No	変更処理日
		A	7424170 1000	YME STANDARD				
		B	7424170 2000	YMC STANDARD				
		C	7424170 3000	YME (D TYPE ~ 1985 2 lot) (ADD TOOL SET INTERLOCK)				
		D	04000	FILM YME				
		E	05000	〃 YMC				
		F	06000	〃 YME (11台~) (パネルセット)				
		G	07000	YMC (〃) (〃)				
		H						
		J						
		K						
		L						
		M						
		N						
		P						
		Q						

書式No.012-1

Mazak YAMAZAKI MAZAK CORPORATION

1	2
P	7

PN

リスト番号 LIST No	3 8	ページ	設変
	4 2 4 1 7 R	0 2	0 2

設変	部品番号 PARTS No 9 19	部品名称 PARTS NAME 英文	カタカナ	備考 REMARKS	メーカ ~~材質~~ ~~MATL~~	使用個数 QTY 20 A	B	C	D	E	F	G	H	J	K	L	M	N	P	Q 79	スペアパーツ 80	81
	D56YC00035 0	① "ON" MARK	4114609114-0			1		1	1		1											
	D56YC00036 0	⓪ "OFF" MARK	4114609115-0			1		1	1		1											
	D56YC00021 0	⏚ EARTH MARK	4114609009-0			1		1	1		1											
	D51MA00268 0	LOCK COVER	(07FA)		MITSUBISHI	1		1	1													
	D56SJ00018 0	PAD LOCK	40x21x6		SYOKETSU	1		1	1		1											
	D51MA00377 0	TERMINAL COVER	TC-L-NF100S-3P		MITSUBISHI	1	1	1	1	1												
	D26FA00002 0	KEY SWITCH	AH25-J2A-20A		FUJI	1		2	2		2											
	D20FA00013 0	INDICATOR	AH25-ZMR		FUJI	1		1	1		1											
	D51MA00378 0	TERMINAL COVER	TC-L-NF225S-3P		MITSUBISHI						1	1										
	D51MA00269 0	LOCK COVER	(13FA)								1											
	D04TC00001 0	RELAY	G2A-432A DC24V	MOINT, MOINTZ	OMRON						2											

書式No.012-1

1	2
U	7

UN

3	4	5	6	7	8	ページ	設変
4	2	4	1	8	R	0 1	0 1

全頁数 2

機種 424 VKC-15/40

PARTS LIST

ユニット MONITOR SYSTEM

LIST No 424 18R 0101

変更No 技術No	識別 9 10	区分 SEC. 11	ユニット番号 UNIT No 12–22	SPECIFICATION OF UNIT	~~組図 No.~~	~~リスト No.~~	SET No	変更処理日
		A	7424180 1000	MMS (R) : MONITOR B				
		B	02000	FIIM MONITOR C (STD.)				
		C	03000	FIIM MONITOR B (10台 12)				
		D	04000	FIIM 〃 C (11台～) (パネルマウント)				
		E	05000	〃 〃 B	〃			
		F						
		G						
		H						
		J						
		K						
		L						
		M						
		N						
		P						
		Q						

書式No.012-1

Mazak YAMAZAKI MAZAK CORPORATION

1	2
P	7

PN

3	4	5	6	7	8	ページ	設変
4	2	4	1	8	R	0 2	0 1

リスト番号 LIST No 424 18R 0201

設変	部品番号 PARTS No 9–19	部品名称 PARTS NAME 英文	カタカナ	備考 REMARKS	~~材質~~ ~~MTL~~	使用個数 QTY 20	B	C	D	E	F	G	H	J	K	L	M	N	P	Q 79	ランクパーツ 80	81
	D70UB001830	MMS RECEIVER	MMS 受信器		UNION DENSHI	1																
	D71YC001200	MMS CABLE	40000009-A317A		YAMAZAKI	1																
	D71YC001190	〃	40000009-C062		〃	1		1		1												
	D63ND000010	FLEXIBLE TUBE	VF-4		NIPPON FLEX	3m		3m		3m												
	D64ND000660	BOX CONNECTOR 90°	VFC-304		NIPPON FLEX	1		1		1												
		MMS RECEIVER	U-226	FIIM SPEC.	UNION DENSHI			1		1												
		MMS CABLE	40000009-J017		YAMAZAKI			1														
		〃	〃 -J122		〃					1												
		AFC UNIT	AFCユニット FIIM SPEC (WITH NOISE FILTER SGB 1201-11)		UNION DENSHI		1	1	1	1												
	D50KL000300	AFC POWER SUPPLY	AFCデンゲン		〃		1	1	1	1												
	D70KL000360	AFC DISPLAY	AFCヒョウジ		〃		1	1	1	1												
	D71HG000020	AFC CABLE	AFCケーブル		〃		1	1	1	1												

書式No.012-1

1	2
U	7

UN

424 SH-036

機種	424 VBC-15/40	PARTS LIST	ユニット	CYCLE FINISH LIGHT	LIST No	3 4 5 6 7 8	ページ	設変	全頁数
						4 2 4 2 0 R	0 1 0 3		2

変更No 技術No	識別 9 10	区分 SEC. 11	ユニット番号 UNIT No 12–22	SPECIFICATION OF UNIT	~~組図 No.~~	~~リスト No.~~	SET No	変更処理日
		A	7424200 1000	CYCLE FINISH LIGHT				
		B	02000	〃 , FILM	10ヒロ			
		C	03000	〃	11ヒロ～(パネルマウント)			
-SH-036	UA	D	04000	ALARM PATO LIGHT				2/28 -'86
-SH-036	UA	E	05000	CYCLE START PATO LIGHT				2/28 -'86
-SH-036	UA	F	06000	3 PATO LIGHT TOWER				2/28 -'86
		G						
		H						
		J						
		K						
		L						
		M						
		N						
		P						
		Q						

書式No.012-1

Mazak YAMAZAKI MAZAK CORPORATION

1	2
P	7

PN

424 SH-036

リスト番号 LIST No	3	8	ページ	設変
	4 2 4 2 0 R		0 2 0 2	

設変No	部品番号 PARTS No 9–19	部品名称 PARTS NAME 英文	カタカナ	備考 REMARKS	~~メーカー特号~~ ~~MTL~~	使用個数 QTY 20 A	B	C	D	E	F	G	H	J	K	L	M	N	P	Q 79	スペアパーツ 80	81
	D43PA000010	SPARK KILLER	CR10201BL		OKAYA	1			1	1	1											
	D04TC000420	RELAY	LY2Z DC24V		TATEISHI	1			1	1	2											
	D04TC001160	RELAY HOLDER	PYC-Y1		〃	1			1		1											
	D04TC000100	RELAY	LY2 DC24V	PT	〃		1	1														
	D04TC000141	RELAY SOCKET	PTF08A		〃		1			1	2											
	D04TC001170	RELAY RETAINER	PYC-A1		〃		1			1	2											
	D34MA000280	DIODE	SR1FM-8		MITSUBISHI	1	1	1	1	1	2											
	D04TC000060	RELAY RETAINER	PYC-P		TATEISHI			1														
	D04TC000950	RELAY	LY2 AC100V		TATEISHI						1											

書式No.012-A-4

1	2
U	7

UN

機種	424 VQC-15/40	PARTS LIST	ユニット	PALLET CHANGER	LIST No	3 4 5 6 7 8	ページ	設変	全頁数
						4 2 4 2 1 R	0 1	0 2	3

変更No 技術No	識別 9 10	区分 SEC. 11	ユニット番号 UNIT No 12–22	SPECIFICATION OF UNIT	組図 No.	リスト No.	SET No	変更処理日
		A	7 4 2 4 2 1 0 1 0 0 0	2 PALLET CHANGER				
		B	0 2 0 0 0	〃 F11M 10台口				
		C	0 3 0 0 0	2 PALLET CHANGER (INDIRECT COOLING CABINET)				
		D	0 4 0 0 0	〃 F11 11台～(ﾊﾞｯｸﾕﾆｯﾄ)				
		E						
		F						
		G						
		H						
		J						
		K						
		L						
		M						
		N						
		P						
		Q						

書式No.012-1

Mazak YAMAZAKI MAZAK CORPORATION

1	2
P	7

PN

リスト番号 LIST No	3 4 5 6 7 8	ページ	設変
	4 2 4 2 1 R	0 2	0 2

設変	部品番号 PARTS No 9–19	部品名称 PARTS NAME 英文	カタカナ	備考 REMARKS	メーカ 材質 MTL	A	B	C	D	E	F	G	H	J	K	L	M	N	P	Q	スペアパーツ 80	81
	D04TC00010 0	RELAY	LY2 DC24V		TATEISHI	2	2	2	2													
	D04TC00014 1	SOCKET	PTF08A		do.	2	2	2														
	D04TC00117 0	RELAY HOLDER	PYC-A1		do.	2	2	2	2													
	D34MA00028 0	DIODE	SR1FM-8		MITUBISAI	2	2	2	2													
	D53TD002000	TERMINAL UNIT	OTL-15×50P		TOYO GIKEN	1	1	1	1													
	D04TC00015 0	RELAY HOLDER	PYC-P						2													
	D70NM00157 0	SSR BOARD	D2W102F16QB		NIHON INTER	1																
	D70NM00158 0	〃	D2W102F16QA		〃		1															
	D70NM00159 0	〃	D2W102F33QB		〃			1														
	D15FA00031 1	P.B. SWITCH	AH25-FB11		FUJI	2	2	2	2													
	D15FA00007 0	P LOCK SWITCH	RCa470-VR1		do.	1	1	1	1													
	D13FA00036 0	SELECT SWITCH	AH25-P2B22		do.	1	1	1	1													
	D13FA00042 0	do.	AH25-P1B		do.	4	4	1	1													
	D21PA00001 0	LED (RED)	BD701R-C		OKAYA	5	5															
	D21FA00002 0	LED (GREEN)	BD703G-C		do.	8	8															
	D30MB00111 0	RESISTER	ERC-1G 1.5kΩ 1/2W		MATUSITA	13	13	13	13													
	D21PA00004 0	LED (RED)	BD-1401R		OKAYA			5	5													
	D21PA00005 0	LED (GREEN)	BD-1402G		do.			8	8													

書式 No.012 A-4

1	2
U	7

UN

機種	424 VQC-15/40	PARTS LIST	ユニット	PALLET CHANGER	LIST No	3 4 5 6 7 8	ページ	設変	全頁数
						4 2 4 2 1 R	0 1	0 2	3

変更No 技術No	識別 9 10	区分 SEC. 11	ユニット番号 UNIT No 12 … 22	SPECIFICATION OF UNIT	組図 No.	リスト No.	SET No	変更処理日
		A	7 4 2 4 2 1 0 1 0 0 0	2 PALLET CHANGER				
		B	0 2 0 0 0	〃 F11M 10台口				
		C	0 3 0 0 0	2 PALLET CHANGER (INDIRECT COOLING CABINET)				
		D	0 4 0 0 0	〃 F11 11台～(ﾊﾞｯｸﾎﾟｹｯﾄ)				
		E						
		F						
		G						
		H						
		J						
		K						
		L						
		M						
		N						
		P						
		Q						

書式No.012-1

Mazak YAMAZAKI MAZAK CORPORATION

1	2
P	7

PN

リスト番号 LIST No	3 … 8	ページ	設変
	4 2 4 2 1 R	0 2	0 2

設変	部品番号 PARTS No 9 … 19	部品名称 PARTS NAME 英文	カタカナ	備考 REMARKS	メーカ MTL	使用個数 QTY 20 A	B	C	D	E	F	G	H	J	K	L	M	N	P	Q 79	スペアパーツ 80	81
	D04TC00010 0	RELAY	LY2 DC24V		TATEISHI	2	2	2	2													
	D04TC00014 1	SOCKET	PTF08A		do.	2	2	2														
	D04TC00117 0	RELAY HOLDER	PYC-A1		do.	2	2	2	2													
	D34MA00028 0	DIODE	SR1FM-8		MITUBISAI	2	2	2	2													
	D53TD002000	TERMINAL UNIT	OTL-15×50P		TOYO GIKEN	1	1	1	1													
	D04TC00015 0	RELAY HOLDER	PYC-P						2													
	D70NM00157 0	SSR BOARD	D2W102F16QB		NIHON INTER	1																
	D70NM00158 0	〃	D2W102F16QA		〃		1															
	D70NM00159 0	〃	D2W102F33QB		〃			1														
	D15FA00031 1	P.B. SWITCH	AH25-FB11		FUJI	2	2	2	2													
	D15FA00007 0	P LOCK SWITCH	RCa470-VR1		do.	1	1	1	1													
	D13FA00036 0	SELECT SWITCH	AH25-P2B22		do.	1	1	1	1													
	D13FA00042 0	do.	AH25-P1B		do.	4	4	1	1													
	D21PA00001 0	LED (RED)	BD701R-C		OKAYA	5	5															
	D21FA00002 0	LED (GREEN)	BD703G-C		do.	8	8															
	D30MB00111 0	RESISTER	ERC-1G 1.5kΩ 1/2W		MATUSITA	13	13	13	13													
	D21PA00004 0	LED (RED)	BD-1401R		OKAYA			5	5													
	D21PA00005 0	LED (GREEN)	BD-1402G		do.			8	8													

書式 No.012 A-4

Mazak YAMAZAKI MAZAK CORPORATION

	1	2
P	7	

PN

リスト番号 LIST No	3					8	ページ	改変	
	4	2	4	2	1	R	0	3	0	1

改変	部品番号 PARTS No (9–19)	部品名称 PARTS NAME 英文	カタカナ	備考 REMARKS	メーカ ~~材質~~ ~~MTL~~	使用個数 QTY (20–79) A	B	C	D	E	F	G	H	J	K	L	M	N	P	Q	ランクスペアパーツ 80	81
	D53TD00197 0	TERMINAL UNIT	CTL-15×35P		TOYO GIKEN	2	2	2	2													
	D63ND00001 0	NIPOLEX TUBE	VF-2		NIPPON FLEX	8m	8m	8m	8m													
	D63ND00003 0	do.	VF-4		do.	10m	10m	10m	10m													
	D63ND00005 0	do.	VF-8		do.	10m	10m	10m	10m													
	D64ND00024 0	BOX CONNECTOR	VFC-104		do.	2	2	2	2													
	D64ND00026 0	do.	VFC-108		do.	2	2	2	2													
	D64ND00022 0	do.	VFC-102		do.	2	2	2	2													
	D60ND00301 0	LS BOX CONNECTOR	LC-302		do.	2	2	2	2													
	D64ND00086 0	CA CONNECTOR	PSF-104CA2022		do.	2	2	2	2													
	D64ND00090 0	do.	PSF-108CA2428		do.	1	1	1	1													
	D60DA00023 0	MS CONNECTOR	MS3102A20-29P		DAIICHI	1	1	1	1													
	D61DB00001 0	CABTYRE CABLE	VCT-2C 0.75sq		DAINICHI	15m	15m	15m	15m													
	D62SA00103 0	IRRAX WIRE	A-0.75sq BLUE		SUMITOMO	50m	50m	50m	50m													
	D62SA00102 0	do.	A-0.5sq BLUE		do.	10m	10m	10m	10m													
	D62SA00106 0	do.	A-0.75sq RED		do.	10m	10m	10m	10m													
	D43PA00001 0	SPARK KILLER	CA-1020/BL		OKAYA	4	4	4	4													
		CABLE	42401/81202		YAMAZAKI	1		1														
		〃	42401/79213A		〃				1													

機種	ユニット	LIST No	ページ	設変	全頁数
424 VQC-15/40	INDEX/ROTARY TABLE	U7 424222R	010	02	2

PARTS LIST

変更No 技術No	識別 9 10	区分 SEC. 11	ユニット番号 UNIT No 12–22	SPECIFICATION OF UNIT	~~組図 No. / リスト No.~~	SET No	変更処理日
		A	7424220 1000	INDEX TABLE	M CODE ×3		
		B	7424220 2000	NC ROTARY TABLE	(4 AXIS)		
		C	03000	INDEX TABLE FIM type			
		D	04000	NC ROTARY TABLE 〃	(10台口)		
		E	05000	〃 〃	(11台～ パネルマウント)		
		F	06000	INDEX TABLE 〃	(11台～ パネルマウント)		
		G					
		H					
		J					
		K					
		L					
		M					
		N					
		P					
		Q					

書式No.012-1

Mazak YAMAZAKI MAZAK CORPORATION

リスト番号 LIST No: P7 424222R 020 02

設変	部品番号 PARTS No 9–19	部品名称 PARTS NAME 英文	カタカナ	備考 REMARKS	メーカー ~~材質~~ ~~NTTb~~	使用個数 QTY 20 A	B	C	D	E	F	G	H	J	K	L	M	N	P	Q 79	ランクスペアパーツ 80	81
	D04TC00042 0	RELAY	LY2Z DC24V		TATEISHI	3					3											
	D04TC00116 0	RELAY HOLDER	PYC-Y1		〃	3																
	D04TC00015 0	〃	PYC-P								3											
	D04TC00042 0	RELAY	LY2Z DC24V		TATEISHI		1			1												
	D04TC00015 0	RELAY HOLDER	PYC-P		do.		1			1												
	D64ND00097 0	CA CONNECTOR	PSF106-CA2022B		NIPPON FLEX		1			1												
	D64ND00109 0	do.	PSF106-CA2428B		do.		1			1												
	D64ND00036 0	BOX CONNECTOR	VFC-106B		do.		2			2												
	D63ND00015 0	BRAID TUBE	VFB-106		do.		8m			8m												
	D71YC00138 0	4 AXIS CABLE	40000009-C85A		YAMAZAKI		1															
	D71YC00139 0	do.	40000009-B183		do.		1															
	D60DA00309 0	MS CONNECTOR	MS3101A 20-29P		DAIICHI DENSHI		1															
	D60DA00107 0	CABLE CLAMP	MS3057-12A		〃		1															
	D60DA00312 0	MS CONNECTOR	MS3101A 28-20P		〃		1															
	D60DA00108 0	CABLE CLAMP	MS3057-16A		〃		1															
	D30MB00166 0	RESISTOR	ERC-126-3.9kΩ 1/2W		MATUSHITA		1															
		4 AXIS CABLE	40000009-J156		YAMAZAKI					1												
		do.	-J158		do					1												

書式No.012-3-1

機種	424 VQC-15/40	PARTS LIST	ユニット	AUTO POWER OFF	LIST No	U7	424240R	ページ 0101	全頁数 4

変更No 技術No	識別	区分 SEC.	ユニット番号 UNIT No	SPECIFICATION OF UNIT	~~組図 No.~~	~~リスト No.~~	SET No	変更処理日
		A	7424240 1000	AUTO POWER OFF				
		B	02000	AUTO POWER ON/OFF CALENDAR TIMER				
		C	03000	CPU LINK				
		D	04000	FIIM AUTO POWER OFF	(10ち～)			
		E	05000	〃 〃	(11ち～ パネルマウント)			
		F						
		G						
		H						
		J						
		K						
		L						
		M						
		N						
		P						
		Q						

書式No.012-1

Mazak YAMAZAKI MAZAK CORPORATION

リスト番号 LIST No	P7	424240R	ページ 0201

設変	部品番号 PARTS No	部品名称 PARTS NAME 英文	カタカナ	備考 REMARKS	~~メーカー 略号~~ ~~MFR~~	使用個数 QTY A	B	C	D	E	F	G	H	J	K	L	M	N	P	Q	スペアパーツ	
	D06TC001470	TIMER RELAY	H3Y-2 DC24V 3 min	APWOF	TATEISHI	1																
	D04TC001140	TIMER HOLDER	Y92H-4		〃	1																
	D04TC000420	RELAY	LY2Z DC24V		〃	1																
	D04TC001160	RELAY HOLDER	PCY-Y1		〃	1																
	D26FA000050	KEY SWITCH	AH25-S2A-11A		FUJI	1			1	1												
	D06TC001060	TIMER RELAY	H3Y-4 DC24V 3min		TATEISHI				1	1												
	D04TC000181	SOCKET	PYF14A		〃				1													
	D04TC000540	TIMER RETAINER	Y92H-3		〃				1													
	D04TC001140	〃	Y92H-4							1												

書式No.012 A 4

Mazak YAMAZAKI MAZAK CORPORATION

1	2
P	7

PN 3 … 8 ページ 設変

リスト番号 LIST No 4 2 4 2 4 R 0 3 0 1

設変 NO	部品番号 PARTS No (9–19)	部品名称 PARTS NAME 英文	カタカナ	備考 REMARKS	メーカ ~~材質~~ MTL	使用個数 QTY (20–79) A	B	C	D	E	F	G	H	J	K	L	M	N	P	Q	ランク スペアパーツ (80)	(81)
	D06YB00131 0	CALENDER TIMER	ET100PC		YAMATAKE		1															
	D06TC00147 0	TIMER	H3Y-2 DC24V 3MIN		TATEISHI		1															
	D04TC00114 0	RELAY HOLDER	Y92H-4		do.		1															
	D04TC00042 0	RELAY	LY2Z DC24V		do.		1															
	D04TC00015 0	RELAY HOLDER	PYC-P		do.		1															
	D04TC00017 0	RELAY	LY2 DC24V		do.		3															
	D04TC00014 1	RELAY SOCKET	PTF08A		do.		3															
	D04TC00117 0	RELAY HOLDER	PYC-A1		do.		3															
	D04TC00001 0	RELAY	G2A-432A DC24V		do.		5															
	D04TC00018 1	RELAY SOCKET	PYF-14A		do.		5															
	D04TC00118 0	RELAY HOLDER	PYC-A2		do.		5															
	D445F00022 0	CONDENSOR	TW100μF 50mW				1															
	D30MB00108 0	RESISTOR	ERC-1G-22Ω 1/2W				1															
	D34MB00027 0	DIODE	SR1FM-8		MITSUBISHI		8															
	D53SC00085 0	LUG PLATE	L3522 SP		SATO PARTS		1															
	D13FA00036 0	SELECT SWITCH	AH25-PB22		FUJI		1															
	D63ND00003 0	NIPOLEX TUBE	VF-4		NIPPON FLEX		4 m															
	D64ND00066 0	BOX CONNECTOR	VFC-304		do.		4															

様式 No.012 A 4

Mazak YAMAZAKI MAZAK CORPORATION

1	2
P	7

PN 3 … 8 ページ 設変

リスト番号 LIST No 4 2 4 2 4 R 0 4 0 0

設変	部品番号 PARTS No (9–19)	部品名称 PARTS NAME 英文	カタカナ	備考 REMARKS	メーカ ~~材質~~ MTL	使用個数 QTY (20–79) A	B	C	D	E	F	G	H	J	K	L	M	N	P	Q	ランク スペアパーツ (80)	(81)
	D04TC00001 0	RELAY	G2A-432A DC24V		TATEISHI			9														
	D04TC00018 1	SOCKET	PYF-14A					9														
	D04TC00118 0	RELAY HOLDER	PYC-A2					9														
	D04TC00010 0	RELAY	LY2 DC24V					3														
	D04TC00014 1	SOCKET	PTF-08A					3														
	D04TC00117 0	RELAY HOLDER	PYC-A1					3														
	D34MA00028 0	DIODE	SR1FM-8		MITSUBISHI			12														
	D53TD00085 0	LUG PLATE	L3522-SP		SATO-PARTS			1														
	D30MB00108 0	RESISTOR	ERC-1G-22Ω 1/2W		MATUSITA			1														
	D445F00022 0	CONDENSOR	TW100μF 50WV		SINEI			1														
	D70YC00231 0	LEVELE CONVERTER A			YAMAZAKI			2														
		CABLE	4240181201		YAMAZAKI			1														
	D63ND00001 0	NIPOLEX TUBE	VF-2		NIPPON FLEX			4 m														
	D64D00064 0	BOX CONNECTOR	VFC-302		〃			6														

様式 No.012 A 4

UN	3 4 5 6 7 8	ページ	枝変
U 7	424 SH-036		

機種	424	PARTS LIST	ユニット	FMS	LIST No	4 2 4 2 8 R	0 1	0 0	全頁数 3

変更No 廃No	識別 9 10	区分 SEC. 11	ユニット番号 UNIT No 12–22	SPECIFICATION OF UNIT	組図 No.	リスト No.	SET No	変更処理日
SH-036	UA	A	7 4 2 4 2 8 R 0 1 0 0	CPU LINK A TYPE MZV				2/28 -86
SH-036	UA	B	7 4 2 4 2 8 R 0 2 0 0	CPU LINK B TYPE MZV				〃
SH-036	UA	C	7 4 2 4 2 8 R 0 3 0 0	CPU LINK C TYPE MZV				〃
		D						
		E						
		F						
		G						
		H						
		J						
		K						
		L						
		M						
		N						
		P						
		Q						

書式No.012-1

Mazak YAMAZAKI MAZAK CORPORATION

PN	3 8	ページ	枝変
P 7	424 SH-036		

リスト番号 LIST No		4 2 4 2 8 R	0 2	0 0

枝変	部品番号 PARTS No 9–19	部品名称 PARTS NAME 英文	カタカナ	備考 REMARKS	~~特殊メーカー~~	使用個数 QTY 20 Ⓐ	Ⓑ	Ⓒ	D	E	F	G	H	J	K	L	M	N	P	Q 79	スペアパーツ 80	81
	D04TC00001 0	RELAY	GZA-432A DC24V		TATEISHI	9	9	9														
	D04TC000181	SOCKET	PYF-14A		〃	9	9	9														
	D04TC001180	RELAY HOLDER	PYC-A2		〃	9	9	9														
	D04TC000100	RELAY	LYZ DC24V		〃	3	3	3														
	D04TC000141	SOCKET	PTF-08A		〃	3	3	3														
	D04TC001170	RELAY HOLDER	PYC-A1		〃	3	3	3														
	D04TC001200	RAIL	PFP-50N		〃	1	1	1														
	D04TC001220	END PLATE	PFP-M		〃	2	2	2														
	D04TC001230	SPACER	PFP-S		〃	2	2	2														
	D34MA000280	DIODE	SR1FM-8		MITSUBISHI	12	12	12														
	D53TD000850	LUG PLATE	L3522-5P		SATO PARTS	1	1	1														
	D30MB001080	RESISTOR	ERC-1G-22Ω, 1/2W		MATSUSHITA	1	1	1														
	D44SF000220	CONDENSER	TW 100μF, 50WV		SHINEI	1	1	1														
	D70YC002370	LEVEL CONVERTER	A TYPE		UNION ELEC.	2																
	D65UB000710	LEVEL CONVERTER	B TYPE		〃		2															

書式 No.012 A 1

Mazak YAMAZAKI MAZAK CORPORATION

1	2
P	7

PN

424 SH-036

リスト番号 LIST No	3				8	ページ	設変	
	4	2	4	2	8	R	0	3	0	0

設変 NO	部品番号 PARTS No (9–19)	部品名称 PARTS NAME 英文	カタカナ	備考 REMARKS	~~特殊~~ メーカー ~~MFR~~	使用個数 QTY (20–79) Ⓐ	Ⓑ	Ⓒ	D	E	F	G	H	J	K	L	M	N	P	Q	ランクスペアパーツ (80)	(81)
		CABLE	40000009-G952		YAMAZAKI	20 m	20 m															
			40000009-A693A		〃	1.5 m	1.5 m															
			40000009-A694		〃	2.0 m	2.0 m															
			40000009-A695		〃	3.0 m	3.0 m															
			40000009-A919A		〃	3.0 m	3.0 m															
			40000009-A920		〃	3.0 m	3.0 m															
			40000009-A952B	max. 100m	〃	x m																
			40000009-J114	max. 15m	〃			x m														
	D71NA001940	OPTICAL FIBER CABLE	OD-9475-2-30-M-CD	(30m)	NEC																	
	D71NA002200		OD-9475-2-45-M-CD	(45m)	〃																	
	D71NA001950		OD-9475-2-100-M-CD	(100m)	〃																	
	D71NA001920		OD-9475-2-150-M-CD	(150m)	〃																	
	D71NA002700		OD-9475-2-500-M-CD	(500m)	〃																	
	D71NA002030		OD-9475-2-60-M-CD	(60m)	〃																	

様式 No.012 A 4

機種	424 VQC-5/40	PARTS LIST	ユニット	MAGNE SCALE	LIST No	UN: U 7	4 2 4 2 9 R	ページ 0 1	設変 0 1	全頁数 2

変更No 技術No	識別 9 10	区分 SEC. 11	ユニット番号 UNIT No 12–22	SPECIFICATION OF UNIT	~~組図 No.~~	~~リスト No.~~	SET No	変更処理日
		A	7 4 2 4 2 9 0 1 0 0 0	MAGNE SCALE FEED BACK	(X, Y, Z AXIS)			
		B	0 2 0 0 0	do.		(INDIRECT CODING CABINET)		
		C						
		D						
		E						
		F						
		G						
		H						
		J						
		K						
		L						
		M						
		N						
		P						
		Q						

書式No. 012-1

Mazak YAMAZAKI MAZAK CORPORATION

リスト番号 LIST No	PN: P 7	4 2 4 2 9 R	ページ 0 2	設変 0 1

設変	部品番号 PARTS No 9–19	部品名称 PARTS NAME 英文	カタカナ	備考 REMARKS	~~メーカ~~ ~~付番~~ ~~MTL~~	使用個数 QTY 20 A	B	C	D	E	F	G	H	J	K	L	M	N	P	Q 79	スペアパーツ 80	81
	D71YC002650	CABLE LIST	4240175202		YAMAZAKI	1	1															
	D64ND000430	BOX CONNECTOR 45°	VFC-202		NIPPON FLEX	2																
	D64ND000460	〃	VFC-206		〃	6																
	D64ND000010	FLEXIBLE TUBE	VF-2		〃	3m																
	D64ND000040	〃	VF-6		〃	10m																

機種	VQC-15/40 424	PARTS LIST	ユニット	SPARE PARTS	LIST No (UN 3 4 5 6 7 8)	7 4 2 4 3 8 R	ページ 0 1	設変 0 0	全頁数 3

変更No 技術No	識別 9 10	区分 SEC. 11	ユニット番号UNIT No 12–19	20 21 22	SPECIFICATION OF UNIT ユニットの仕様	SET No	変更処理日
		A	74243810	000	1.5 YEAR		
		B	20	000	3 YEAR		
		C	30	000	5 YEAR		
		D	40	000	OVER 5 YEAR		
		E					
		F					
		G					
		H					
		J					
		K					
		L					
		M					
		N					
		P					
		Q					

書式 No.012-1 S 56. 11. 2,000

Mazak YAMAZAKI MAZAK CORPORATION

	1	2	3	4	5	6	7	8	ページ	設変
PN	P	7								
リスト番号 LIST No			4	2	4	3	8	R	0 2	0 0

設変	部品番号 PARTS No 9–19	部品名称 PARTS NAME 英文	カタカナ	備考 REMARKS	メーカー ~~特殊~~ ~~材質~~	使用個数 QTY 20 A	B	C	D	E	F	G	H	J	K	L	M	N	P	Q 79	スペアパーツ 80	81
	D51MA003420	CIRCUIT BREAKER	NF100S 100A 63		MITSUBISHI	0	1	1	1													
	D51MA000080	"	NF30CB3P 15A		〃	0	0	0	1													
	D51MA003070	CIRCUIT PROTECTOR	CP-B1PA2B-M10A		MISUBISHI	0	0	2	2													
	D51MA003080	"	CP-B1PA2B-M03A		〃	0	0	1	1													
	D51MA003050	"	CP-S1P M-2A		〃	0	0	1	1													
	D01MA033160	MAGNETIC CONTACTOR	MSOA12RMTB 6.5A		MISUBISHI	0	1	1	1													
	D01MA033140	"	MSOA12RMTB 1.7A		〃	0	0	1	1													
	D01MA033110	"	MSOA12RMTB 1.2A		〃	0	0	1	1													
	D50NW000340	DC. POWER SUPPLY	EC-11-24 DC24V4.5A		NEMIC	0	0	1	1													
	D26FA000050	SELECT KEY SW.	AH25-J2A-11A		FUJI	0	0	0	1													
	D26FA000010	"	AH25-J2A-10A		〃	0	0	0	1													
	D30MP001000	RESISTOR	KNP6W220HM		MICRON	0	0	0	1													

書式 No.012-A 1

Mazak YAMAZAKI MAZAK CORPORATION

PN	リスト番号 LIST No	ページ設変
P 7	424382R	0300

設変	部品番号 PARTS No		部品名称 PARTS NAME 英文	カタカナ	備考 REMARKS	メーカー ~~機種~~ ~~MFR~~	使用個数 QTY A	B	C	D	E	F	G	H	J	K	L	M	N	P	Q	ランクスペアパーツ 80	81
	D34MA00049	0	DIODE	SR3AM8		MISUBISHI	1	1	1	1													
	D43PA00052	0	SPARK KILLER	3CRH-303303φ		OKAYA	0	0	1	2													
	D43PA00056	0	〃	AU1201		〃	0	0	1	2													
	D56N000050	0	FAN	HS4506		TOBISHI	6	6	12	12													
	D04TC00002	0	RELAY	G2A-432A-AC100V		TATEISHI	1	2	3	3													
	D04TC00042	0	〃	LY2Z-AC24V		〃	0	0	9	9													
	D04TC00001	0		G2A-432A-DC24V			0	0	2	2													
	D06TC00146	0	TIMER	H3Y-2 DC24V 30min		TATEISHI	1	1	1	1													
	D55MB00002	0	AC OUTLET	WK-3001125V3A		MASUSHITA	0	0	0	1													
	D70NM00157	0	SSR BOAD	D2W102F16QB		NIHON INTER	0	0	0	1													
	D70MA00180	0	RELAY CARD	RC3A		MISUBISHI	0	0	0	1													

仕様書

D2W102F16QA
① +COMMON, −INPUT ② 入力発光ダイオード表示 出力検出回路付
D70NM001580
D2W102F16QB
① −COMMON, +INPUT ② 入力発光ダイオード表示 出力検出回路付
D70NM001570

仕様書
SPECIFICATIONS

DRAWING NO. 30-60368 SHEET 1 OF 3

1. 16個の絶縁された固体交流リレーを実装した無接点交流リレー基板
   contactless ac relay board on mounted photo-i soloted solid state ac relay of 16 pcs.
2. 型番
   model number — D2W102F16QA | D2W102F16QB
3. 電気的定格
   electrical ratings
   定格電圧
   rated voltage RMS: 120V
   電源電圧範囲
   ac: line voltage range RMS: 60～140V
   周波数範囲
   frequency range: 47～63Hz
   最大負荷電流
   max. load current RMS. 2.0 A (@ each SSR S element Ta-30°C)
   非くり返し1サイクルサージ電流
   non-repeat one-cycle surge current PEAK: 28A
   絶縁抵抗
   i solating resistance: 30MΩ min (@ output-to-input, Ta-25°C)
   入力信号電圧範囲
   control signal voltage range DC: 3～28V
   入力インピーダンス
   typical input impedance: 1.5KΩ
   動作温度範囲
   operating temperature range: -20～+80°C
   保存温度範囲
   storage temperature range: -25～+85°C
4. 電気的特性
   electrical characteristics (Ta-25°C)
   開路時もれ電流
   max. off-state leakage current RMS: 5.0mA @rated voltage
   接触電圧降下
   max. contact voltage drop RMS: 1.6V @ max. load current
   ピックアップ電圧
   max. pick-up voltage DC: 3.0V
   ドロップアウト電圧
   min. drop-out voltage DC: 1.0V
5. 重量
   approximate weight: 700gr
6. 外形
   outline: drawing NO. 23-81320-01 | 23-81320-02
7. 回路
   circuit diagrams: drawing NO. 57-81320-01 | 57-81320-02
8. SSRボード(シルク)図
   SSR board: drawing NO. 03-81579-01 | 03-81579-02

DRN. BY	Mazak YAMAZAKI MAZAK CORPORATION	TITLE: SSR BOARD	CONTROL
DATE			DRAWING NO. 30-60368 SHEET 1 OF 3
CHK'D BY			SIZE 3
DATE			

INDEX NUMBER — LINE — SHEET

(1) SSR Board specifications

1) Maximum allowerble operating temperature range (°C)	-20 ~ +80
2) Maximum allowerble control voltage range (VDC)	24 ± 4
3) Absolute minimum operating control voltage (VDC)	3.0
4) Typical input impeadance (KΩ)	1.5
5) Maximum allowerble AC. line voltage (Vrms)	140
6) Minimum allowerble AC. line voltage (Vrms)	80
7) Maximum absolute non-repeat AC. line peak surge voltage (Vpk)	400
8) Maximum rated load current (Arms), @ Ta = 60°C	1.6
9) Maximum rated load current to operating intermittently (on : 1sec, off : 1sec) load (Arms), Ta = 60°C	2.0

(2) Marking

The marking resiets a spirit-based solvent at the tests in accordance with Method 215 of MIL-STD-202D.

(3) Identification of Lot Number

The lot number is marked with insoluble white ink in the dotted-line block provided in the vicinity of SSR 39.

Example : November 10, 1980

[0 K 10]

The date of production	1 2 ····· 15 ····· 30 31
Coad	01 02 ····· 15 ····· 30 31

The month of production	JAN.	FEB.	MAR.	APR.	MAY.	JUN.
Coad	A	B	C	D	E	F

	JUL.	AUG.	SEP.	OCT.	NOV.	DEC.
	G	H	I	J	K	L

The year of production (by the lost number)	0 1 2 3 4 5 6 7 8 9
Coad	0 1 2 3 4 5 6 7 8 9

(4) SSR Board Tests

Items	Criteria
1. Physical test	Visual inspection and by slide calipers
2. Dielectric withstand test	30 megohms or above between the load and input terminals bound in groups, using a 500 VDC megger at Ta=25°C.
3. Normal operation test	The on and off operations are normal. The circuits are arranged to run 2 amps at 120 VAC with a resistive load on the load side, and apply 18 VDC to turn on and 1 VDC to turn off on the input side at Ta = 25°C
4. Indicator lamp (LED) test	The lamp indications on and off are normal. The circuit arrangements are same as those in Item 3 above.
5. Finished test mark	SSR boards qualified in the teats 1 to 4 will bear a mark 合 at the top of lot number.

(5) The Pin numbers of Conector

The CN13 conector were accorded with the number of SSRs as follows.

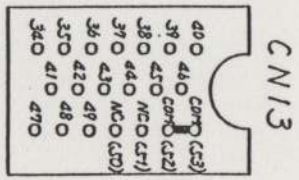

DRAWING NO. 30-60368 SHEET 2 OF 3

DRN. BY	
DATE	
CHK'D BY	
DATE	

Mazak YAMAZAKI MAZAK CORPORATION

TITLE: SSR BOARD

CONTROL

DRAWING NO. 30-60368 SHEET 2 OF 3

SIZE 3

(6) Parts List

Symbols	Parts names	Qt.	Parts types
HT13	Load terminator	1	MTB9-10P
HT14	Load terminator	1	MTB92G-10P
CN13	Control connector	1	MR20RMD
SSR	Solid state AC relays	16	D2W102F
D1~D4	Grass diodes	4	V06E
LED	Light. emitted diodes	1	SLP-136B (LED-R)
R1	Cement fixed	16	SLP-236B (D34~D49)
	resistors	1	SQ-1KΩJ 10W
R2	Carbon film fixed resistors	1	RD25S47ΩJ
R3	resistors	1	RD25S39ΩJ
PCB	Printed circuit board	1	03-81579-01 or 02
TP	Test Pin	1	LC-1-S

Symbols	Manufactures
HT1	Morimatu Denshi Kogyo Co., Ltd.
HT1	Morimatu Denshi Kogyo Co., Ltd.
CN13	Honda Tsushin Kogyo Co., Ltd.
SSR	International Rectifier Corp. Japan., Ltd.
D1~D4	Hitachi Ltd.
LED	Sanyo Electric Co., Ltd.
R1	Tama Ohm Co., Ltd.
R2.R3	Koa Denki Co., Ltd.
PCB	Sanki Kogyo Co., Ltd.
TP	MC Eight Co., Ltd.

Spare Lists

Symbols	Gratis spare	Compensative spare
HT13		
HT14		
CN13		
SSR		
D		
LED		
R1		
R2		
PCB		

(7) Circuit Diagram
1) SSR Circuit Diagram
2) SSR Boad Circuit Diagram

1. Reference

16QA drowing NO. 57-81320-01
16QB drowing NO. 57-81320-02

DRAWING NO. 30-60368 SHEET 3 OF 3

DRN. BY
DATE
CHK'D BY
DATE

Mazak
YAMAZAKI MAZAK CORPORATION

TITLE SSR BOARD

CONTROL
DRAWING NO. 30-60368
SHEET 3 OF 3
SIZE 3

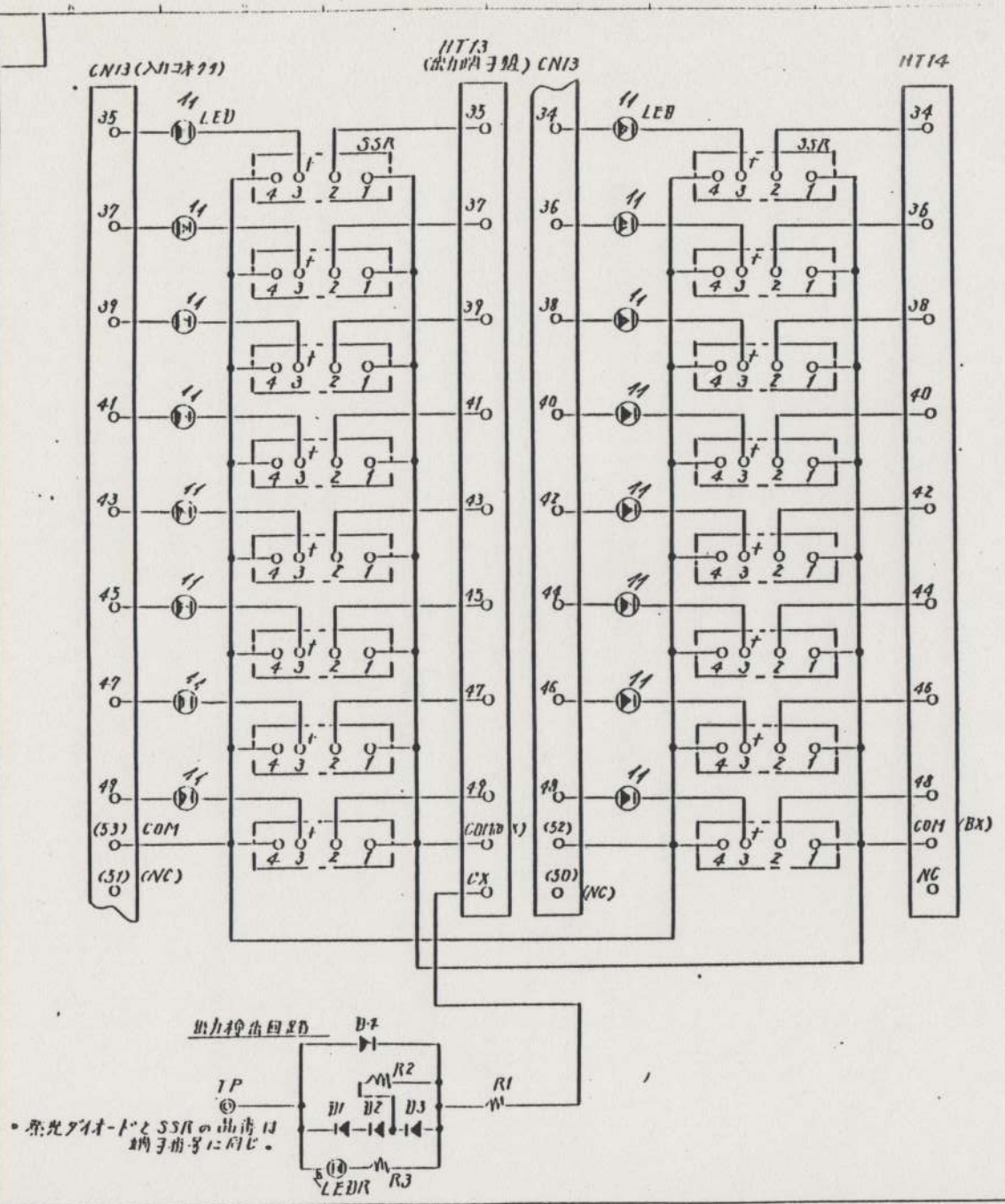

端子台を手前にして上面図

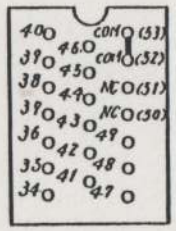

DRAWING NO. 57-81320-02
SHEET ___ OF. ___

DRN. BY	
DATE	
CHK'D BY	
DATE	

Mazak
YAMAZAKI MAZAK CORPORATION

TITLE: SSR BOARD

CONTROL

DRAWING NO. 57-81320-02

SIZE 3

SHEET ___ OF. ___

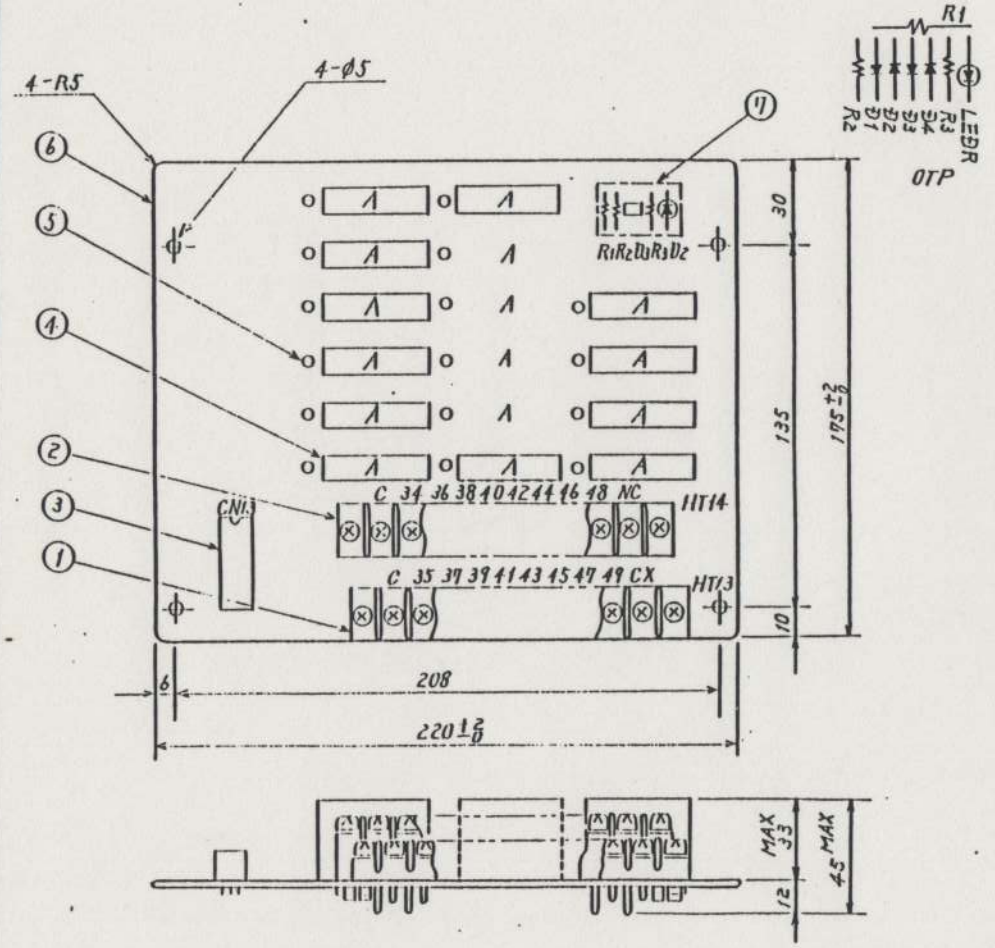

入力コネクタのSSR対応NO(端子台を手前にして上面)

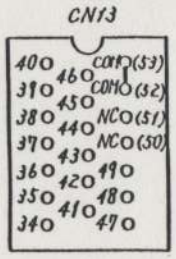

回路図

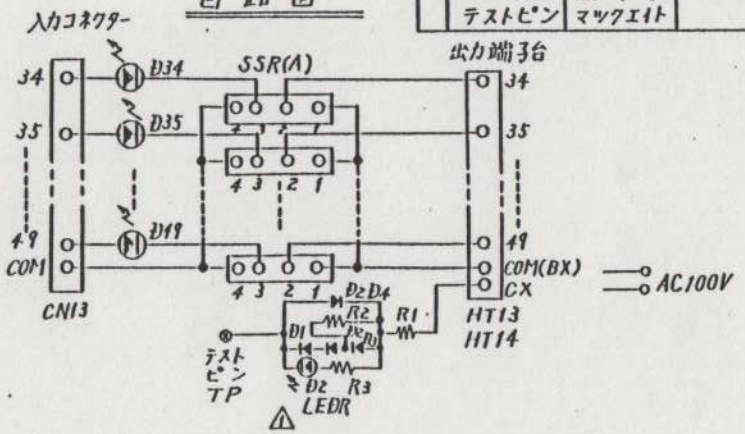

部品リスト

NO	部品名	仕様規格		個数
1	出力端子台	MTB9-10P 森松		1
2	出力端子台	MTB92G-NP 森松		1
3	入力コネクタ	MR-20MD 本多		1
4	SSR(A)	D2W102F 日本インター		16
5	D34～D49 入力表示	SLP-236B 三洋緑色	D21SH000140	16
6	基板	03-81579-01 日本インター		1
7	出力表示			
	LEDR	SLP-136B 三洋赤色	D21SH000130	1
	R1	SQ 1KΩJ 10W タマオーム		1
	R2	RD25S470Ω J 興亜		1
	R3	RD25S39Ω J 興亜		1
	D1～D4 ダイオード	V06E 日立		4
	TP テストピン	LC-1-S マックエイト		1

DRAWING NO. 23-81320-02 SHEET 1 OF 2

DRN. BY
DATE
CHK'D BY
DATE

Mazak
YAMAZAKI MAZAK CORPORATION

TITLE SSR BOARD

CONTROL
DRAWING NO. 23-81320-02
SHEET 1 OF 2
SIZE 3

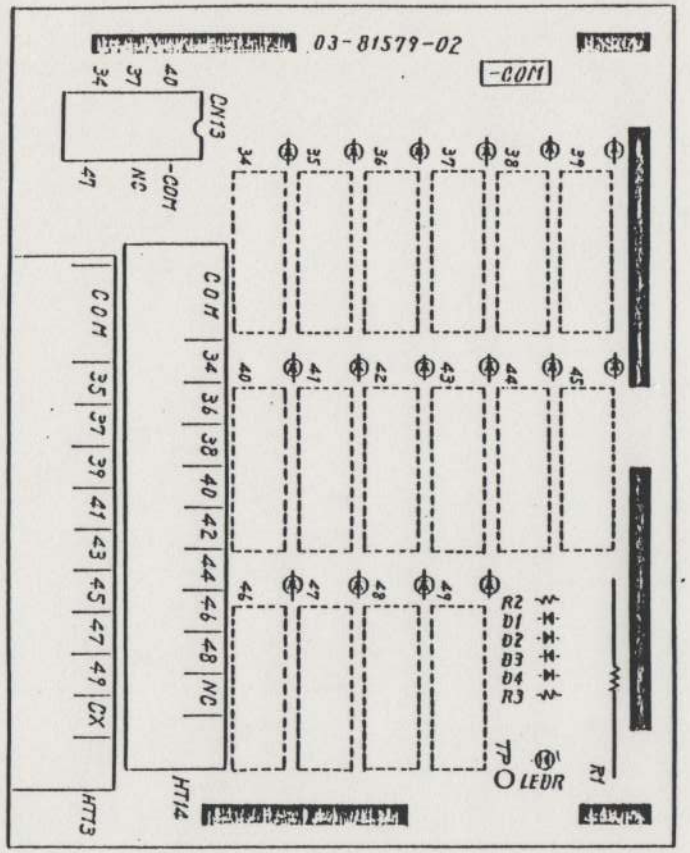

(1) SSRボードの規格

1)	最高許容温度 (℃)	-20～+80
2)	入力側の絶縁電圧許容値 (VDC)	24±4
3)	入力側の絶縁最低電圧保証値 (VDC)	18
4)	入力側のインピーダンス (KΩ)	15±5%
5)	負荷側の電源電圧最高許容値 (Vrms)	140
6)	負荷側の絶対最低電源電圧保証値 (Vrms)	80
7)	負荷側の非くり返しサージ電圧許容値 (Vpk)	400
8)	連続負荷電流の最高許容値 (Arms)	1.6@Ta=50℃
9)	断続負荷電流の最高許容値 (Arms) ON: 1SEC OFF: 1SEC	2.0@Ta=40℃

(2) シルクの表面処理

MIL-STD-202D. 方法215の試験方法にて アルコール系溶剤で試験した時 表示消えがなく 判読できること。

(3) ロットの見分け方

SSR39の近く点線枠で示した位置に 白色不燃インキにて標印表示する。

例 0 K 10 4　1980年11月10日

製造日	12----15----30 31	
表示	01 02----15----30 31	
製造月	1 2 3 4 5 6 7 8 9 10 11 12	
表示	A B C D E F G H I J K L	
製造年	0 1 2 3 4 5 6 7 8 9	注) 西暦の末尾の数字で表示する。
表示	0 1 2 3 4 5 6 7 8 9	

(4) SSRボードの試験

1) 外観検査　目視およびノギスによる。

2) 絶縁抵抗試験　30MΩ以上 @500VDCメガー、負荷側全端子と入力側全端子間. Ta=25℃

3) 動作確認試験　ON-OFF確実動作のこと。
@負荷側: AC120V. 2A、抵抗負荷
入力側: DC18V及び DC4V. Ta=25℃

4) 表示灯確認試験　確実に点滅のこと。
@条件は 3)項と同一とする。

5) 合格. EP　1)～4)項の試験合格ボードは ロットの左肩に㊀を標印する。

(5) コネクタCN13のSSR対応 NO.

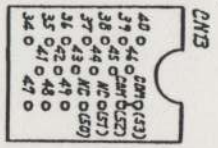

(I) SSR内部回路図

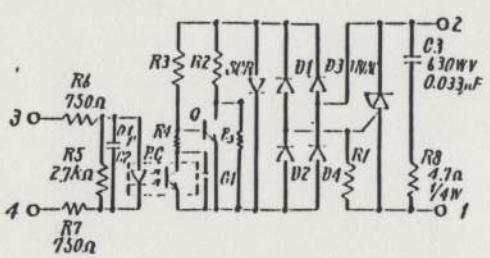

(II) SSRボード回路図

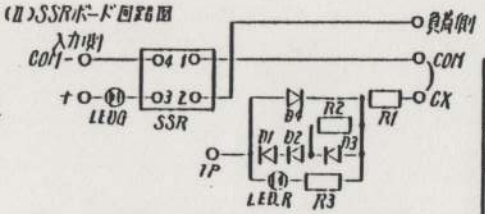

1) 全回路図は 57-81320-02図面参照

(6) 部品リスト

記号	部品名	数量	型番・メーカ	メモリスト 無	メモリスト 有
R1	セメント抵抗器	1	SQ-1kΩJ 10W		
D1～D4	発光ダイオード(G)	16	SLP-236B		
TP	テストピン	1	LC-1-S		

記号	部品名	数量	型番・メーカ	メモリスト 実装	メモリスト 可装
HT13	負荷側端子台	1	HT89-10P 表松		
HT14	負荷側端子台	1	HT892G-10P 表松		
CN13	入力側コネクタ	1	HS20RH1D オ.マ		
SSR	ソリッドステートACリレー	16	DLW102F 日本インター		
D1～4	ガラスダイオード	4	YO6E01相当品 日本インター		
LED-R	発光ダイオード(R)	1	SLP-136B 三洋		
R3	炭素皮膜抵抗器	1	RD25S33ΩJ 興亜		
R2	炭素皮膜抵抗器	1	RD25S47ΩJ 興亜		
PCB	プリント配線基板	1	03-81379-01		

DRAWING NO. 23-81320-02 SHEET 2 OF 2

DRN. BY
DATE
CHK'D BY
DATE

Mazak
YAMAZAKI MAZAK CORPORATION

TITLE SSR BOARD

CONTROL

DRAWING NO. 23-81320-02

SHEET 2 OF 3

SIZE 3

仕様書

D2W102F33QA
① +COMMON, −INPUT ② 入力発光ダイオード表示 出力検出回路付
D70NM001540
D2W102F33QB
① −COMMON, +INPUT ② 入力発光ダイオード表示 出力検出回路付
D70NM001590

仕様書
SPECIFICATIONS

1. 33個の光絶縁された固体交流リレーを実装した無接点交流リレー基板
   Contactless ac relay board on mounted photo-isolated solid state ac relay of 33 pcs.
2. 型番
   model number D2W102F33QA | D2W102F33QB
3. 電気的定格
   electrical ratings
   定格電圧
   rated voltage RMS: 120V
   電源電圧範囲
   ac: line voltage range RMS: 60～140V
   周波数範囲
   frequency range: 47～63Hz
   最大負荷電流
   max. load current RMS 2.0A (@ each SSR's element Ta-30°C)
   非くり返し1サイクルサージ電流
   non-repeat one-cycle surge current PEAK: 28A
   絶縁抵抗
   isolating resistance: 30MΩ min (@ output-to-input, Ta-25°C)
   入力信号電圧範囲
   control signal voltage range DC: 3～28V
   入力インピーダンス
   typical input impedance: 1.5KΩ
   動作温度範囲
   operating temperature range: -20～+80°C
   保存温度範囲
   storage temperature range: -25～+85°C
4. 電気的特性
   electrical characteristics (Ta-25°C)
   開路時もれ電流
   max. off-state leakage current RMS: 5.0mA @rated voltage
   接触電圧降下
   max. contact voltage drop RMS: 1.6V @ max. load current
   ピックアップ電圧
   max. pick-up voltage DC: 3.0V
   ドロップアウト電圧
   min. drop-out voltage DC: 1.0V
5. 重量
   approximate weight: 900gr
6. 外形
   outline: drawing NO. 23-81321-01 | 23-81321-02
7. 回路
   circuit diagrams: drawing NO. 57-81321-01 | 57-81321-02
8. SSRボード(シルク)図
   SSR board: drawing NO. 03-81581-01 (3/4) | 03-81581-02 (3/4)

DRAWING NO. 30-60374 SHEET 1 OF 3

DRN. BY	
DATE	
CHK'D BY	
DATE	

Mazak
YAMAZAKI MAZAK CORPORATION

TITLE: SSR BOARD

CONTROL
DRAWING NO. 30-60374
SHEET 1 OF 3
SIZE 3

(1) SSR Board specifications

1) Maximum allowerble operating temperature range (°C)	-20 ~ +80
2) Maximum allowerble control voltage range (VDC)	24 ± 4
3) Absolute minimum operating control voltage (VDC)	3.0
4) Typical input impeadance (KΩ)	1.5
5) Maximum allowerble AC. line voltage (Vrms)	140
6) Minimum allowerble AC. line voltage (Vrms)	80
7) Maximum absolute non-repeat AC. line peak surge voltage (Vpk)	400
8) Maximum rated load current (Arms), @ Ta = 60°C	1.6
9) Maximum rated load current to operating intermittently (on : 1sec, off : 1sec) load (Arms), Ta = 60°C	2.0

(2) Marking

The marking resiets a spirit-based solvent at the tests in accordance with Method 215 of MIL-STD-202D.

(3) Identification of Lot Number

The lot number is marked with insoluble white ink in the dotted-line block provided in the vicinity of SSR 07

Example : November 10, 1980

[0 K 10]

The date of production	1 2 ····· 15 ····· 30 31
Coad	01 02 ····· 15 ····· 30 31

The month of production	JAN.	FEB.	MAR.	APR.	MAY.	JUN.
Coad	A	B	C	D	E	F

	JUL.	AUG.	SEP.	OCT.	NOV.	DEC.
	G	H	I	J	K	L

The year of production (by the last number)	0 1 2 3 4 5 6 7 8 9
Coad	0 1 2 3 4 5 6 7 8 9

(4) SSR Board Tests

Items	Criteria
1. Physical test	Visual inspection and by slide calipers
2. Dielectric withstand test	30 megohms or above between the load and input terminals bound in groups, using a 500 VDC megger at Ta=25°C.
3. Normal operation test	The on and off operations are normal. The circuits are arranged to run 2 amps at 120 VAC with a resistive load on the load side, and apply 18 VDC to turn on and 1 VDC to turn off on the input side. at Ta = 25°C
4. Indicator lamp (LED) test	The lamp indications on and off are normal. The circuit arrangements are same as those in Item 3 above.
5. Finished test mark	SSR boards qualified in the teats 1 to 4 will bear a mark (D) at the top of lot number.

(5) The Pin numbers of Conector

The CN11 and CN12 conector were accorded with the number of SSRs as follows.

Top View

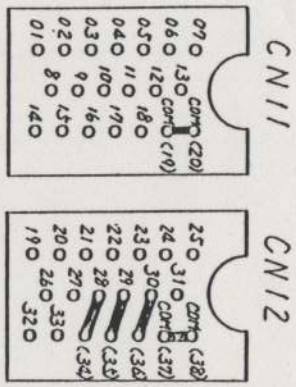

(6) Parts List

Symbols	Parts names	Qt.	Parts types
HT11	Load terminator	1	MTB9-18P
HT11	Load terminator	1	MTB92G-18P
CN11 CN12	Control connector	2	MR20RMD
SSR	Solid state AC relays	33	D2W102F
D1~D4	Grass diodes	4	V06E
LED	Light. emitted diodes	1	SLP-136B
R1	Cement fixed resistors	1	SQ-1KΩJ 10W
R2	Carbon film fixed resistors	1	RD25S47ΩJ
PCB	Printed circuit board	1	03-81581-01or 02
LED	Light emitted diodes	33	SLP-236B (D01~D33)
TP	Test pin	1	LD-1-S
R3	Carbon film fixed	1	RD25S39ΩJ

Symbols	Manufactures
HT11	Morimatu Denshi Kogyo Co., Ltd.
HT12	Morimatu Denshi Kogyo Co., Ltd.
CN11 CN12	Honda Tsushin Kogyo Co., Ltd.
SSR	International Rectifier Corp. Japan., Ltd.
D1~D4	Hitachi Ltd.
LED-R	Sanyo Electric Co., Ltd.
LED-(D01~D33)	Sanyo Electric Co., Ltd.
R1	Tama Ohm Co., Ltd.
R2	Koa Denki Co., Ltd.
R3	Koa Denki Co., Ltd.
PCB	Sanki Kogyo Co., Ltd.
TP	Mc Eight Co., Ltd.

Spare Lists

Symbols	Gratis spare	Compensative spare
HT11		
HT12		
CN11		
CN12		
SSR		
D		
LED		
R1		
R2		
PCB		

(7) Circuit Diagram

1) SSR Circuit Diagram
2) SSR Boad Circuit Diagram

1. Reference

33 QA drowing NO. 57-81321-01
33 QB drowing NO. 57-81321-02

DRAWING NO. 30-60374 SHEET 2 OF 3

DRN. BY
DATE
CHK'D BY
DATE

Mazak
YAMAZAKI MAZAK CORPORATION

TITLE SSR BOARD

CONTROL
DRAWING NO. 30-60374
SHEET 2 OF 3
SIZE B

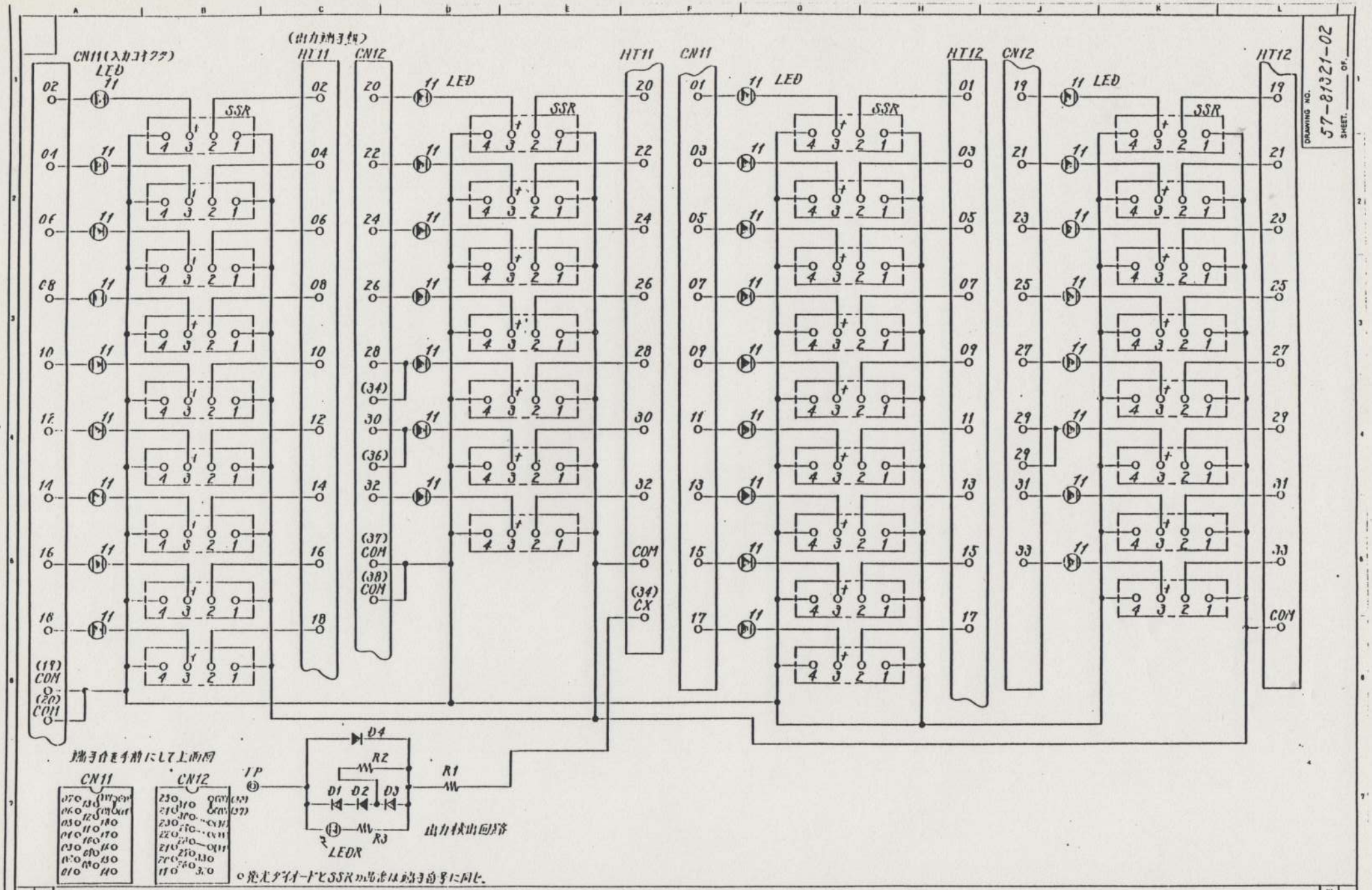

DRN. BY	
DATE	
CHK'D BY	
DATE	

Mazak
YAMAZAKI MAZAK CORPORATION

TITLE: SSR BOARD

CONTROL

DRAWING NO. 57-81321-02

SIZE 3

SHEET ___ OF ___

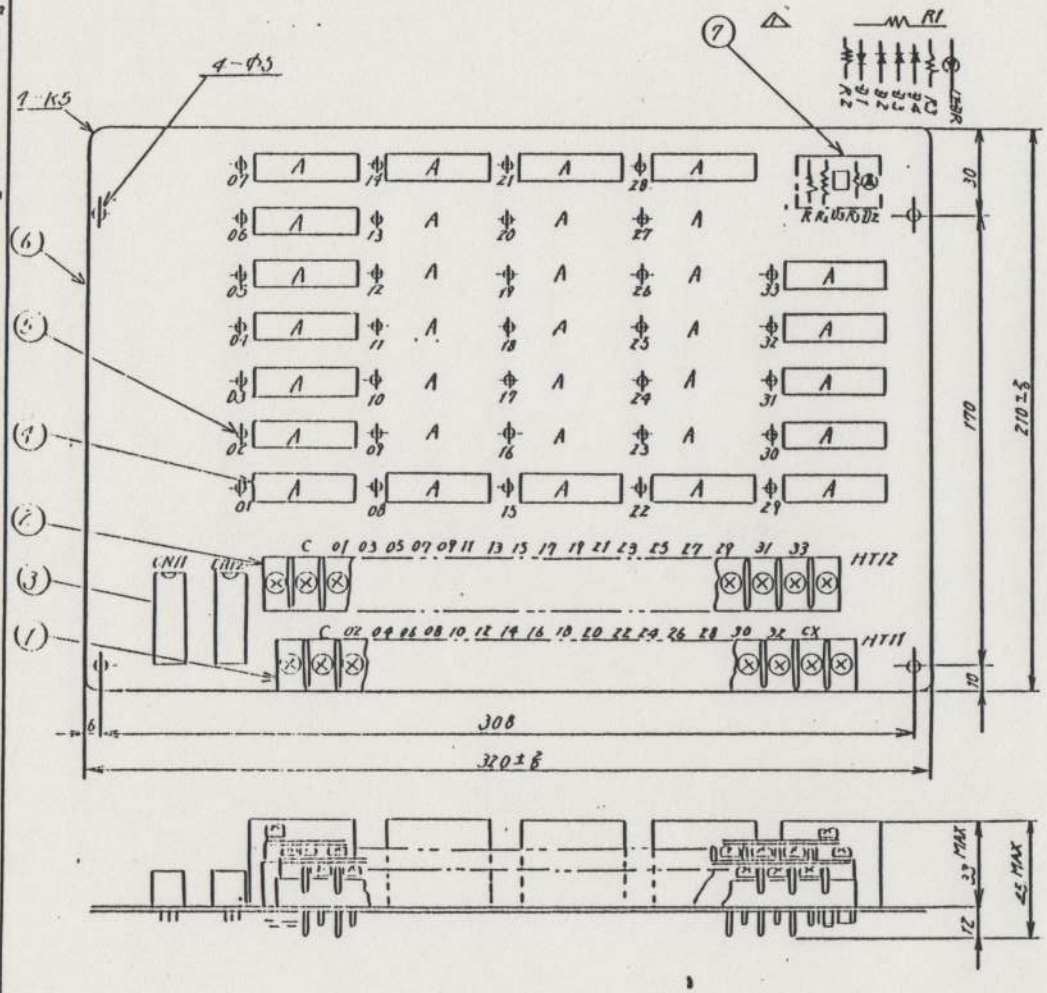

入力コネクタのSSR対応NO(端子台を手前にして上側)

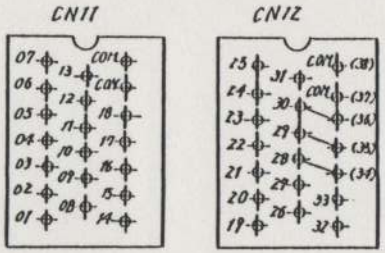

シルク印刷

①出力端子台の②の端子番号
01~33, C. NC 端子台隣接印
字メシルク印刷イトスル。

回路図

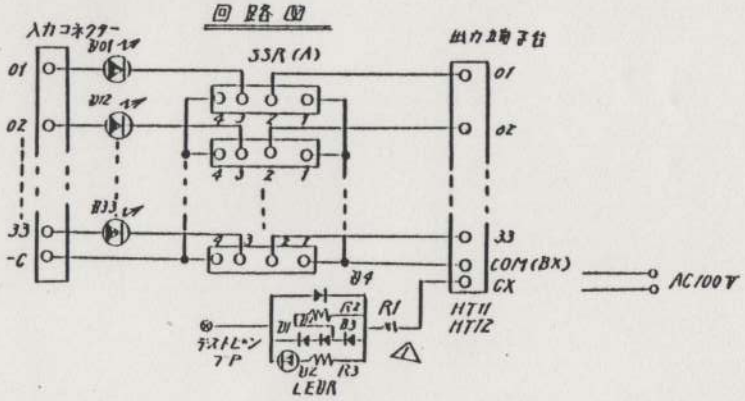

部品リスト

NO	部品名	仕様名		個数
1	出力端子台	カバー付 MTB7-101 森松	B53MC001010	1
2	出力端子台	カバー付 森松	B53MC001020	1
3	入力コネクタ	MR-20RMB 本多通信	B604D002390	2
4	SSR(A)	D2W 日本インター	B27NM0000	33
5	(D01~D33) 入力表示	SLP-236B 三洋 緑色	B21SH000140	33
6	基板	03-81581-01 日本インター		1
7	出力表示			
	LEDR	SLP-136B 三洋 赤色	B21SH000130	1
	R1	SQ-1K-J 10W タマオーム		1
	R2	RD25347KJ 興亜		1
	R3	RD25339KJ 興亜		1
	(D1~D4) ダイオード	V06E 日立		4
	TP テストピン	LS-1-S マックエイト		1

DRAWING NO. 23-81321-02 SHEET 1 OF 2

DRN. BY	
DATE	
CHK'D BY	
DATE	

Mazak
YAMAZAKI MAZAK CORPORATION

TITLE: SSR BOARD

CONTROL
DRAWING NO. 23-81321-02
SHEET 1 OF 2
SIZE 3

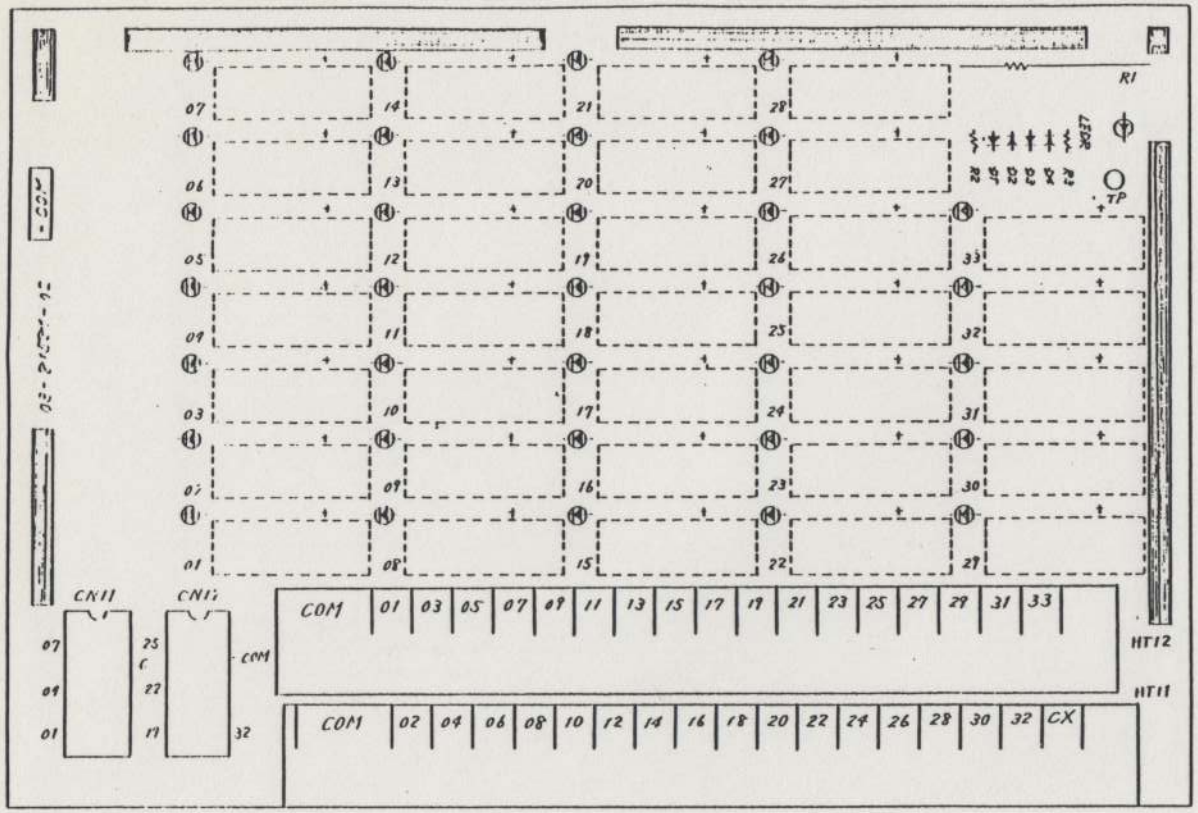

(1) SSR内部回路図

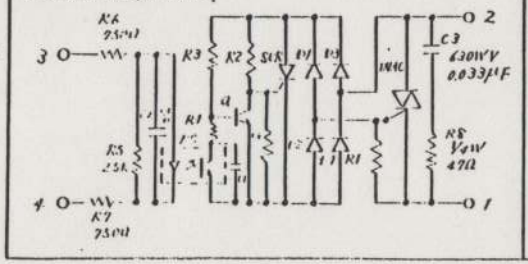

(II) SSRボード回路図

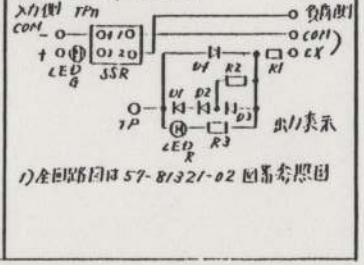

1) 全回路図は 57-81321-02 図番参照図

(1) SSRボードの規格

1) 最高許容温度 (°C)	-20~180
2) 入力側の絶縁電圧許容値 (VDC)	24±4
3) 入力側の絶縁最低電圧保証値 (VDC)	18
4) 入力側のインピーダンス (KΩ)	15±5%
5) 負荷側の整流電圧最高許容値 (Vrms)	140
6) 負荷側の絶縁最低電源電圧保証値 (Vrms)	80
7) 負荷側の非くり返しサージ電圧許容値 (VPK)	400
8) 連続負荷電流の最高許容値 (Arms)	1.0@Ta=50°C
9) 断続負荷電流の最高許容値 (Arms)	2.0@Ta=60°C

(2) シルクの表面処理

MIL-STD-202D, 方法215の試験方法にて, アルコール系溶剤で試験したとき表示消えがなく判読できること。

(3) ロットの見分け方

SSR07の近くに点線枠で示した位置に白色下滅インキにて捺印表示する。

例 0K10 1980年11月10日

製造日	12	15	30 31
表示	01 02	15	30 31

製造月	1 2 3 4 5 6 7 8 9 10 11 12
表示	A B C D E F G H I J K L

製造年	0 1 2 3 4 5 6 7 8 9
表示	0 1 2 3 4 5 6 7 8 9

注: 西暦の末尾の数字で表示する。

(4) SSRボードの試験

1) 外観検査	目視およびノギスによる。
2) 絶縁抵抗試験	30MΩ以上 @500VDメガー 負荷側全端子と入力全端子間 Ta=25°C
3) 動作確認試験	ON-OFF確実動作のこと。 @負荷側: AC120V. 2A. 抵抗負荷. 入力側: DC18V.ヌたはDC1V. Ta=25°C
4) 表示灯確認試験	確実に点滅のこと。 @条件は3)項と同一とする。
5) 合格印	1)~4)項の試験合格ボードはロッドの左肩に㊀を捺印する。

(3) コネクタ NC11 NC12 のSSR対応NO.

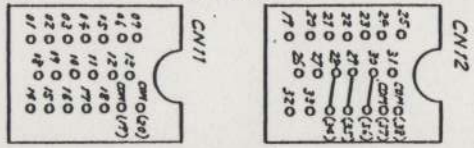

(6) 部品リスト

記号	部品名	数量	型名・メーカ	山崎品番	試作	量産
HT11	負荷側端子台	1	MT89-18Pボード付 森松	D53C001010		
HT12	負荷側端子台	1	MT82G-18P 森松	D53HC001020		
端子	入力側コネクタ	2	MK20RMD 本多通信	D50HL002270		
SSR	ソリッドステートACリレー	33	[illegible]102F [illegible]	[illegible]		
	ガラスダイオード	4	YO4E or [illegible] [illegible]	[illegible]		
LED.R	発光ダイオード(赤)	1	SLP 136B 三洋	D25H000130		
R1	セメント抵抗器	1	50-1KΩJ 10W			
R2	炭素皮膜抵抗器	1	ED25S 270J 日亜	D30K0001-60		
R3	炭素皮膜抵抗器	1	ED25S 470J 日亜	D30K0001470		
P.C.B.	プリント配線基板	1	03-81321-02			
D01~D33	発光ダイオード(緑)	33	SLP-236B 三洋	D25H000190		
T.P.	テストピン	1	LO-1-S マックエイト	D53K0002220		
配線	リスト用ビニル線	1	西陣ワイヤ ℓ=450			

DRAWING NO.	23-81321-02
SHEET	2 OF 2

INDEX NUMBER 02 SHEET

DRN. BY
DATE
CHK'D BY
DATE

Mazak
YAMAZAKI MAZAK CORPORATION

TITLE: SSR BOARD

CONTROL
DRAWING NO. 23-81321-02
SHEET 2 OF 2
SIZE 3

Mazak

YAMAZAKI MAZAK CORPORATION
1 Norifune, Oguchi-cho, Niwa-gun,
Aichi-pref., Japan
Phone: Oguchi (0587)95-1131
Telex: J59777
Cable: "MAZAK" NAGOYA JAPAN
Facsimile: 0587-95-2717

MAZAK CORPORATION
8025 Production Drive, Florence,
Kentucky 41042 U.S.A.
Phone: 606-727-5700, Western Union
Telex: 214674
Facsimile: 606-727-5865/5833

CHICAGO REGIONAL TECHNICAL CENTER
600 N. Wheeling Road
Mt. Prospect, Illinois 60056
Phone: 312-298-9797
Facsimile: 312-699-2373

HARTFORD REGIONAL TECHNICAL CENTER
10 Bidwell Road
South Windsor, Connecticut 06074
Phone: 203-528-9511
Facsimile: 203-528-2995

NEW YORK REGIONAL TECHNICAL CENTER
110 BL-Country Boulevard,
Suite #107 Farmingdale,
New York 11735
Phone: 516-420-5980

ATLANTA REGIONAL TECHNICAL CENTER
1964 Providence Court
College Park, Georgia 30337
Phone: 404-996-1030
Facsimile: 404-996-3533

ORLANDO REGIONAL TECHNICAL CENTER
Bay Colony Technology Center
4501 Vineland Suite #111
Orland, Florida 32811
Phone: 305-843-4224
Facsimile: 305-425-5291

LOS ANGELES REGIONAL TECHNICAL CENTER
1333 West 190th Street
Gardena, California 90248
Phone: 213-327-7772
Facsimile: 213-538-4087

SAN FRANCISCO REGIONAL TECHNICAL CENTER
497N. Milpitas Blud. Milpitas,
California 95035
Phone: 408-946-4991
Facsimile: 408-946-7381

HOUSTON REGIONAL TECHNICAL CENTER
770 North Belt East,
Houston, Texas 77060
Phone: 713-931-7770
Facsimile: 713-931-6191

DALLAS REGIONAL TECHNICAL CENTER
2030 North Huy.,
Graud Prairie, Texas 75050
Phone: 214-641-3059
Facsimile: 214-641-2968

YAMAZAKI MAQUINAS HERRAMIENTAS, S.A. DE C.V.
Boulevard Toluca 22-E
Planta Baja
Naucalpan De Juarez
Estado de Mexico
MEXICO
Phone: 905-358-6460
Facsimile: 5-358-6480

YAMAZAKI MACHINERY EUROPE N.V.
Grauwmeer 7, Research Park
3030 Leuven,
BELGIUM
Phone: 016-205911
Telex: 62552 MAZAK B
Facsimile: 32-16-22-4587

YAMAZAKI MACHINERY DEUTSCHLAND GMBH
Esslinger Strasse 4,
7320 Göppingen, Deutschland
Phone: 07161-68057/8
Telex: 727653
Facsimile: 49-7161-73613

YAMAZAKI MACHINERY DEUTSCHLAND GMBH FRANKFURT REGIONAL TECHNICAL CENTER
Norden Strasse 46
6082 Mörfelden-Walldorf
Deutschland
Phone: 61057-1025
Telex: 4185773
Facsimile: 49610-571272

YAMAZAKI MACHINERY DEUTSCHLAND GMBH NIEDERLASSUNG NORD
Siemensring 89, D-4156 Willich 1
Gewerbegebiet Muenchheide
Deutschland
Phone: 02-154-427041~3
Facsimile: 492154-4308

YAMAZAKI MACHINERY U.K. LTD.
Buckholt Drive,
Warndon Industrial Estate,
Warndon, Worcester,
UNITED KINGDOM
Phone: 0905-57024
Telex: 51338889
Facsimile: 44905-57644

MAZAK FRANCE
Z1.5, Rue des Chasseurs-B.P.451
Ville-la-Grand 74108
Annemasse FRANCE
Phone: 50-37-5422
Facsimile: 3350-3773-62

Printed in Japan