Apple iPhone XS Schematic

Apple

Schematic Diagram

Mobile1Tech
mobile1tech.com
HARDWARE

1. ALL RESISTANCE VALUES ARE IN OHMS, 0.1 WATT +/- 5%.
2. ALL CAPACITANCE VALUES ARE IN MICROFARADS.
3. ALL CRYSTALS & OSCILLATOR VALUES ARE IN HERTZ.

REV	ECN	DESCRIPTION OF REVISION	CK APPD / DATE
4	0011669799	ENGINEERING RELEASED	2018-03-16

D33 MLB Bottom Ice : EVT

LAST_MODIFICATION=Fri Mar 16 10:21:05 2018

PAGE	CSA	CONTENTS	SYNC	DATE
1	1	TABLE OF CONTENTS		07/29/2016
2	2	SYSTEM:BOM Tables		
3	4	SYSTEM: Mechanical Components		06/06/2017
4	6	BOOTSTRAPPING		08/08/2017
5	7	SYSTEM: Testpoints (Bottom)		11/01/2017
6	34	SYSTEM POWER: Iktara		11/01/2017
7	56	CG: Power Supplies - Touch & Display		11/01/2017
8	66	Interposer: B2B Symbol		11/01/2017
9	77	B2B: Interposer Loft		06/07/2017
10	80	RADIOS		03/31/2017
11	81	Interposer: Pins 1-144		11/02/2017
12	82	Interposer: Pins 145-285		11/02/2017
13	83	Hall		11/02/2017
14	84	Interposer: Top Aliases		11/01/2017
15	85	Interposer: Pins 286-359		11/02/2017
16	1	RADIO: TABLE OF CONTENTS		
17	2	BOM TABLES		
18	3	ANTENNA DIAGRAM		
19	4	ANTENNA: B2BS		
20	5	ANTENNA: N-PLEX SHARED		
21	6	BBPMU: CONTROL		
22	7	BBPMU: RAILS		
23	8	BB: INTERFACE		
24	9	BB: DDR PWR & JTAG		
25	10	BB: DIGITAL PWR		
26	11	XCVR: TX & GNSS		
27	12	XCVR: INTERFACE & PWR		
28	13	XCVR: PRX DRX		
29	14	HW CONFIG OPTIONS		
30	15	ET		
31	16	LB SPAD		
32	17	HB SPAD		
33	18	UHB LMB SPAD		
34	19	LB DIVERSITY RECEIVE LNA		
35	20	HB DIVERSITY RECEIVE LNA		
36	21	MIMO RECEIVE LNAS		
37	22	COUPLER + LOWER ANTENNA		
38	23	UPPER ANTENNA FEEDS		
39	24	SIM: ESIM		
40	25	SIM: PSIM		
41	26	TEST POINTS		
42	27	SYMBOL: WIFI		
43	1	WIFI: TABLE OF CONTENTS		
44	2	DIETCOKE		
45	3	FEM MODULES		
46	1	NFC: TABLE OF CONTENTS		
47	75	NFC		

MCO:056-04080
SS ROW:639-04880
SS JP:639-04881
SS NA:639-05085
SSV ROW:639-05086
SSV JP:639-05496
SSV NA:639-05497
DS ROW:639-05640

PART#	QTY	DESCRIPTION	REFERENCE DESIGNATOR(S)	CRITICAL	BOM OPTION
051-02695	1	SCH,MLB_BOT_ICE,D33	SCH	CRITICAL	?
820-01063	1	PCB,MLB_BOT_ICE,D33	PCB	CRITICAL	?

Mobile1Tech.com

Sub Designs

SOURCE PROJECT	SUB-DESIGN NAME	VERSION	HARD/SOFT	SYNC_DATE/TIME
D32	HIER_NFC	0.43.2	S	2018_03_12_10:49:29
D33	HIER_RADIO_ICE	0.46.17	S	2018_03_12_16:55:29

HARDWARE MT Pro

TABLE OF CONTENTS

SYNC_DATE=07/29/2016

DRAWING TITLE: SCH,MLB,BOT,ICE,D33

Apple Inc.

DRAWING NUMBER: 051-02695 SIZE: D

REVISION: 4.0.0

BRANCH:

PAGE: 1 OF 85

SHEET: 1 OF 47

NOTICE OF PROPRIETARY PROPERTY:
THE INFORMATION CONTAINED HEREIN IS THE PROPRIETARY PROPERTY OF APPLE INC.
THE POSESSOR AGREES TO THE FOLLOWING:
I TO MAINTAIN THIS DOCUMENT IN CONFIDENCE
II NOT TO REPRODUCE OR COPY IT
III NOT TO REVEAL OR PUBLISH IT IN WHOLE OR PART
IV ALL RIGHTS RESERVED

EEEE Codes

PART#	QTY	DESCRIPTION	REFERENCE DESIGNATOR(S)	CRITICAL	BOM OPTION
825-7691	1	EEEE (MLB_BOT_ICE,SS,ROW,639-04880)	EEEE_J90J	CRITICAL	SSROW
825-7691	1	EEEE (MLB_BOT_ICE,SS,JP,639-04881)	EEEE_J90K	CRITICAL	SSJP
825-7691	1	EEEE (MLB_BOT_ICE,SS,NA,639-05085)	EEEE_JG58	CRITICAL	SSNA
825-7691	1	EEEE (MLB_BOT_ICE,SSV,ROW,639-05086)	EEEE_JG59	CRITICAL	SSVROW
825-7691	1	EEEE (MLB_BOT_ICE,SSV,JP,639-05496)	EEEE_JM18	CRITICAL	SSVJP
825-7691	1	EEEE (MLB_BOT_ICE,SSV,NA,639-05497)	EEEE_JM19	CRITICAL	SSVNA
825-7691	1	EEEE (MLB_BOT_ICE,DS,ROW,639-05640)	EEEE_JN5M	CRITICAL	DSROW

Global Capacitors

PART NUMBER	ALTERNATE FOR PART NUMBER	BOM OPTION	REF DES	COMMENTS:
138S00148	138S00149	BOM_TABLE_ALTS	ALL	0402-3T,10.5uF@1V, Kyocera
138S00150	138S00149	BOM_TABLE_ALTS	ALL	0402-3T,10.5uF@1V, SEMCO
138S00151	138S00149	BOM_TABLE_ALTS	ALL	0402-3T,10.5uF@1V, TY

CRITICAL PART#	COMMENT
138S00149	0402-3T,10.5uF@1V

PART NUMBER	ALTERNATE FOR PART NUMBER	BOM OPTION	REF DES	COMMENTS:
138S00143	138S00144	BOM_TABLE_ALTS	ALL	0402,16uF@1V, Kyocera
138S00163	138S00144	BOM_TABLE_ALTS	ALL	0402,16uF@1V, Taiyo

CRITICAL PART#	COMMENT
138S00144	0402,16uF@1V

PART NUMBER	ALTERNATE FOR PART NUMBER	BOM OPTION	REF DES	COMMENTS:
138S00138	138S00139	BOM_TABLE_ALTS	ALL	0201,3uF@1V, Kyocera
138S00164	138S00139	BOM_TABLE_ALTS	ALL	0201,3uF@1V, Taiyo

CRITICAL PART#	COMMENT
138S00139	0201,3uF@1V

PART NUMBER	ALTERNATE FOR PART NUMBER	BOM OPTION	REF DES	COMMENTS:
138S00221	138S00146	BOM_TABLE_ALTS	ALL	0402,5.1uF@3V, Kyocera

CRITICAL PART#	COMMENT
138S00146	0402,5.1uF@3V

PART NUMBER	ALTERNATE FOR PART NUMBER	BOM OPTION	REF DES	COMMENTS:
138S00140	138S00141	BOM_TABLE_ALTS	ALL	0201,1.1uF@3V, Kyocera
138S00142	138S00141	BOM_TABLE_ALTS	ALL	0201,1.1uF@3V, SEMCO
138S00166	138S00141	BOM_TABLE_ALTS	ALL	0201,1.1uF@3V, Taiyo

CRITICAL PART#	COMMENT
138S00141	0201,1.1uF@3V

Global Ferrites

PART NUMBER	ALTERNATE FOR PART NUMBER	BOM OPTION	REF DES	COMMENTS:
152S00558	152S00557	BOM_TABLE_ALTS	ALL	IND,MLD,0.47UH,20%,2.5A,80MO,1608
155S00194	155S0610	BOM_TABLE_ALTS	ALL	FERR BD,150 OHM,25%,200MA,0.7 DCR,01005
155S00200	155S0610	BOM_TABLE_ALTS	ALL	FERR BD,150 OHM,25%,200MA,0.7 DCR,01005
155S00338	155S0661	BOM_TABLE_ALTS	ALL	FERR BD,33 OHM,25%,1.5A,55MOHM DCR,0201

CRITICAL PART#	COMMENT
152S00557	IND,MLD,0.47UH,20%,2.5A,80MO,1608
155S0610	FERR BD,150 OHM,25%,200MA,0.7 DCR,01005
155S0661	FERR BD,33 OHM,25%,1.5A,55MOHM DCR,0201

Global R/C Alternates

PART NUMBER	ALTERNATE FOR PART NUMBER	BOM OPTION	REF DES	COMMENTS:
138S0648	138S0652	BOM_TABLE_ALTS	ALL	CAP,X5R,4.7UF,6.3V,0.65MM,0402,TAIYO
138S00024	138S0986	BOM_TABLE_ALTS	ALL	CAP,CER,3-TERM,7.5UF,20%,4V,0402,TAIYO/TDK
138S0706	138S0739	BOM_TABLE_ALTS	ALL	CAP,CER,1UF,20%,10V,X5R,0201,MURATA
138S0945	138S0739	BOM_TABLE_ALTS	ALL	CAP,CER,1UF,20%,10V,X5R,0201,KYOCERA
138S0739	138S0706	BOM_TABLE_ALTS	ALL	CAP,CER,X5R,0.22UF,20%,6.3V,20%
138S00049	138S0831	BOM_TABLE_ALTS	ALL	CAP,CER,X5R,2.2UF,20%,6.3V,0201
138S00133	138S00128	BOM_TABLE_ALTS	ALL	CAP,X5R,0.47UF,20%,6.3V,MUR,01005
138S00116	138S00071	BOM_TABLE_ALTS	ALL	CAP,X5R,4UF,20%,6.3V,0201,T=0.55MM
138S00117	138S00071	BOM_TABLE_ALTS	ALL	CAP,X5R,4UF,20%,6.3V,0201,T=0.55MM
138S00048	138S00003	BOM_TABLE_ALTS	ALL	CAP,X5R,15UF,20%,6.3V,0.65MM,HRZTL,0402
131S00172	131S00164	BOM_TABLE_ALTS	ALL	CAP,CER,C0G,220PF,5%,16V,01005
131S00173	131S00164	BOM_TABLE_ALTS	ALL	CAP,CER,C0G,220PF,5%,16V,01005
131S00185	131S0316	BOM_TABLE_ALTS	ALL	CAP,CER,X5R,0.1uF,20%,6.3V,01005
138S00048	138S00003	BOM_TABLE_ALTS	ALL	CAP,CER,X5R,15uF,20%,6.3V,0402
132S00185	132S0316	BOM_TABLE_ALTS	ALL	CAP,CER,X5R,15uF,20%,6.3V,0402

CRITICAL PART#	COMMENT
138S0652	CAP,X5R,4.7UF,6.3V,0.65MM,0402,TAIYO
138S0986	CAP,CER,3-TERM,7.5UF,20%,4V,0402,TAIYO/TDK
138S0739	CAP,CER,1UF,20%,10V,X5R,0201,MURATA
138S0706	CAP,CER,X5R,0.22UF,20%,6.3V,20%
132S0400	CAP,CER,X5R,0.22UF,20%,6.3V,01005
138S0831	CAP,CER,X5R,2.2UF,20%,6.3V,0201
138S00128	CAP,X5R,0.47UF,20%,6.3V,KYO,01005
138S00071	CAP,X5R,4UF,20%,6.3V,0201,T=0.55MM
138S00003	CAP,X5R,15UF,20%,6.3V,0.65MM,HRZTL,0402
131S00164	CAP,CER,C0G,220PF,5%,16V,01005

Global Inductors

PART NUMBER	ALTERNATE FOR PART NUMBER	BOM OPTION	REF DES	COMMENTS:
152S00653	152S00651	BOM_TABLE_ALTS	ALL	IND,1.2UH,3A,2016,0.65Z
152S00654	152S00652	BOM_TABLE_ALTS	ALL	IND,1.2UH,3A,2016,0.8Z

CRITICAL PART#	COMMENT
152S00651	IND,1.2UH,3A,2016,0.65Z
152S00652	IND,1.2UH,3A,2016,0.8Z

PART NUMBER	ALTERNATE FOR PART NUMBER	BOM OPTION	REF DES	COMMENTS:
685-00243	685-00182	BOM_TABLE_ALTS	SUBBOM_DS	SUBBOM,MLB,BOT,DIODES,ONSEMI,X891

PART#	QTY	DESCRIPTION	REFERENCE DESIGNATOR(S)	CRITICAL	BOM OPTION
685-00242	1	SUBBOM,MLB,BOT,DIODES,DIODES,X891	SUBBOM_DS	CRITICAL	COMMON
371S00133	4	DIODES,SHOTTKY DIODE,30V,2A,0603	D3400,D3401,D3402,D3403	CRITICAL	DIODES_DS
371S00189	4	ONSEMI,SHOTTKY DIODE,30V,2A,0603	D3400,D3401,D3402,D3403	CRITICAL	ONSEMI_DS

Hall Effect Alts

PART NUMBER	ALTERNATE FOR PART NUMBER	BOM OPTION	REF DES	COMMENTS:
353S01327	353S3697	BOM_TABLE_ALTS	ALL	ROHM HES

IKTARA

PART#	QTY	DESCRIPTION	REFERENCE DESIGNATOR(S)	CRITICAL	BOM OPTION
116S00002	6	RES, High Current 0 Ohm	C3461,C3462,C3463,C3464,C3465,C3466	CRITICAL	UNBALNACED CAPS
132S00186	1	CAP, 0.033uF, 10%, 100V, X6S	C3451	CRITICAL	UNBALNACED CAPS
132S00187	3	CAP, 0.047uF. 10%, 100V, X6S	C3452,C3453,C3456	CRITICAL	UNBALNACED CAPS

Mobile1Tech.com

Multi-Vendor Criticals

CRITICAL PART#	COMMENT
138S0979	CAP,CER,X5R,10UF,20%,10V,0402,H=0.65MM
138S0683	CAP,CER,X5R,1UF,10%,25V,0402
132S0663	CAP,CER,X5R,1UF,10%,25V,0402
132S0288	CAP,CER,X5R,0.1UF,10%,16V,0201
132S0275	CAP,CER,X5R,470PF,10%,10V,01005
132S0245	CAP,CER,X5R,0.01UF,10%,6.3V,01005
138S0692	CAP,CER,X5R,1UF,20%,6.3V,0201

CRITICAL PART#	COMMENT
132S00008	CAP,CER,0.1UF,10%,50V,X7R,0402
131S0804	CAP,CER,27PF,5%,C0G,25V,0201
131S0307	CAP,CER,NP0/C0G,100PF,5%,16V,01005
131S00053	CAP,CER,C0G,220PF,5%,10V,01005
117S0055	RES,MF,1/20W,2M OHM,5,0201,SMD
107S0257	THERMISTOR,NTC,10K OHM,1%,B=3435,01005
131S00170	CAP,CER,C0G,220PF,5%,25V,01005
131S0643	CAP,CER,NP0/C0G,56PF,5%,25V,01005
131S0316	CAP,CER,X5R,0.1UF,20%,6.3V,01005

HARDWARE MT Pro

PAGE TITLE
SYSTEM:BOM Tables

Apple Inc.

DRAWING NUMBER 051-02695 | SIZE D
REVISION 4.0.0
BRANCH
PAGE 2 OF 85
SHEET 2 OF 47

NOTICE OF PROPRIETARY PROPERTY:
THE INFORMATION CONTAINED HEREIN IS THE PROPRIETARY PROPERTY OF APPLE INC.
THE POSESSOR AGREES TO THE FOLLOWING:
I TO MAINTAIN THIS DOCUMENT IN CONFIDENCE
II NOT TO REPRODUCE OR COPY IT
III NOT TO REVEAL OR PUBLISH IT IN WHOLE OR PART
IV ALL RIGHTS RESERVED

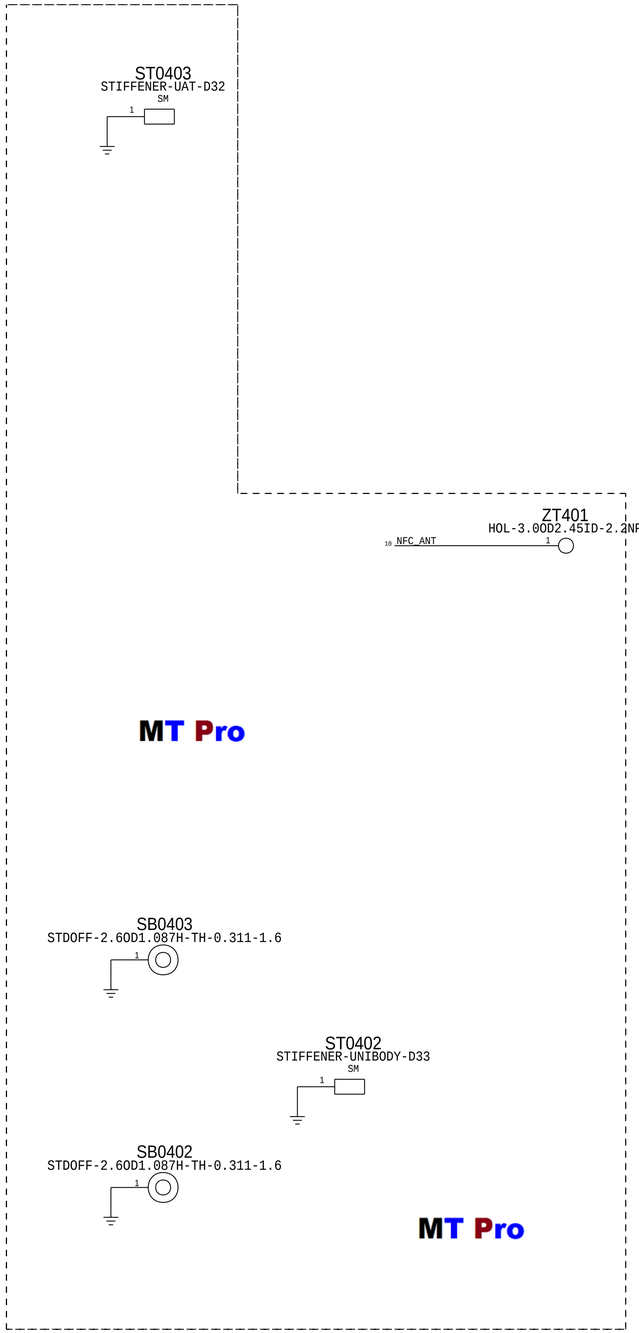

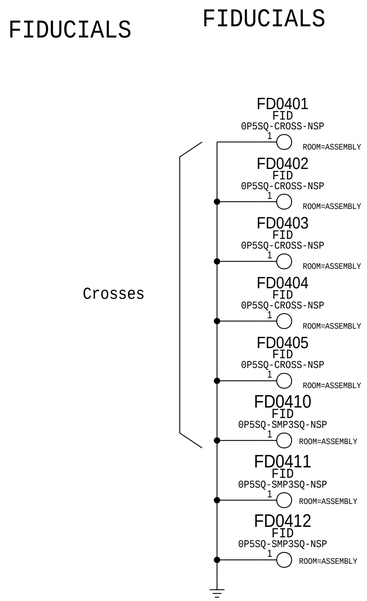

HARDWARE MT Pro

SYNC_DATE=06/06/2017

PAGE TITLE
SYSTEM: Mechanical Components

Apple Inc.

DRAWING NUMBER 051-02695
SIZE D
REVISION 4.0.0
BRANCH
PAGE 4 OF 85
SHEET 3 OF 47

NOTICE OF PROPRIETARY PROPERTY:
THE INFORMATION CONTAINED HEREIN IS THE PROPRIETARY PROPERTY OF APPLE INC.
THE POSESSOR AGREES TO THE FOLLOWING:
I TO MAINTAIN THIS DOCUMENT IN CONFIDENCE
II NOT TO REPRODUCE OR COPY IT
III NOT TO REVEAL OR PUBLISH IT IN WHOLE OR PART
IV ALL RIGHTS RESERVED

BOOTSTRAPPING:BOARD ID[3]

Mobile1Tech.com

	Board ID[4:0] Float = Low PU = High				
	4	3	2	1	0
	Denali = 0, Imola = 1	Mav = 0, Ice = 1	00=Open 01=D33 10=N84 11=D32		MLB = 0, Dev = 1
D33 MLB Mav	0	0	0	**1**	0
D33p MLB Mav	**1**	0	0	**1**	0
D33 Dev Mav	0	0	0	**1**	**1**
D33p Dev Mav	**1**	0	0	**1**	**1**
D33 MLB Ice	0	**1**	0	**1**	0
D33p MLB Ice	**1**	**1**	0	**1**	0
D33 Dev Ice	0	**1**	0	**1**	**1**
D33p Dev Ice	**1**	**1**	0	**1**	**1**
D32 MLB Mav	0	0	**1**	**1**	0
D32 Dev Mav	0	0	**1**	**1**	**1**
D32 MLB Ice	0	**1**	**1**	**1**	0
D32 Dev Ice	0	**1**	**1**	**1**	**1**

SELECTED-->

11 OUT BOARD_ID2
CKPLUS_NAIVE=SINGLE_NODENET

HARDWARE MT Pro

SYNCMASTER
SYNC_DATE=08/08/2017

PAGE TITLE
BOOTSTRAPPING

Apple Inc.

DRAWING NUMBER 051-02695 | SIZE D
REVISION 4.0.0
BRANCH
PAGE 6 OF 85
SHEET 4 OF 47

NOTICE OF PROPRIETARY PROPERTY:
THE INFORMATION CONTAINED HEREIN IS THE PROPRIETARY PROPERTY OF APPLE INC.
THE POSESSOR AGREES TO THE FOLLOWING:
I TO MAINTAIN THIS DOCUMENT IN CONFIDENCE
II NOT TO REPRODUCE OR COPY IT
III NOT TO REVEAL OR PUBLISH IT IN WHOLE OR PART
IV ALL RIGHTS RESERVED

Test Points

14 10 7 6 5 PP_VDD_MAIN
TP0700 A TP-P55 ROOM=TEST — VDD_MAIN
TP0701 A TP-P55 ROOM=TEST
TP0702 A TP-P55 ROOM=TEST
TP0703 A TP-P55 ROOM=TEST

14 PP_BATT_VCC
TP0515 A TP-P55 ROOM=TEST — VBATT
TP0522 A TP-P55 ROOM=TEST

TP0705 A TP-P55 ROOM=TEST
TP0707 A TP-P55 ROOM=TEST
TP0709 A TP-P55 ROOM=TEST
TP0706 A TP-P55 ROOM=TEST
TP0708 A TP-P55 ROOM=TEST
TP0710 A TP-P55 ROOM=TEST

AMUX

11 PMU_AMUX_AY
TP0713 A TP-P55 ROOM=TEST — ANALOG MUX A OUTPUT

11 PMU_AMUX_BY
TP0715 A TP-P55 ROOM=TEST — ANALOG MUX B OUTPUT

DFU

11 HYDRA_TO_AP_FORCE_DFU
TP0714 A TP-P55 ROOM=TEST — FORCE DFU

LVCC

12 PP_GPU_LVCC
TP0720 A TP-P55 ROOM=TEST

12 PP_CPU_PCORE_LVCC
TP0721 A TP-P55 ROOM=TEST

COIL

14 6 IKTARA_COIL1
TP0730 A TP-P55 ROOM=TEST

14 6 IKTARA_COIL2
TP0731 A TP-P55 ROOM=TEST

OV COMP

11 PP_VDD_MAIN_OV_R
TP0741 A TP-P55 ROOM=TEST

12 10 9 TOUCH_TO_MANY_FORCE_PWM
TP0757 A TP-P55 ROOM=TEST

12 9 PMU_TO_TOUCH_CLK32K
TP0758 A TP-P55 ROOM=TEST

13 9 AP_TO_TOUCH_SCAN_CLK
TP0759 A TP-P55 ROOM=TEST

11 9 AP_TO_RACER_RESET_L
TP0761 A TP-P55 ROOM=TEST

12 9 UART_RACER_TO_AOP_RXD
TP0762 A TP-P55 ROOM=TEST

15 9 RACER_TO_AOP_INT_L
TP0763 A TP-P55 ROOM=TEST

12 9 UART_AOP_TO_RACER_TXD
TP0764 A TP-P55 ROOM=TEST

14 6 PP_VBUS2_IKTARA
TP0765 A TP-P55 ROOM=TEST

REL BIAS

11 PMU_TO_SYSTEM_COLD_RESET_L
TP0772 A TP-P55 ROOM=TEST

12 REL_BIAS_VBUS_EN
TP0773 A TP-P55 ROOM=TEST

11 AP_TO_CAMPMU_RESET_L
TP0774 A TP-P55 ROOM=TEST

MT Pro

Mobile1Tech.com

Probe Points

Iktara Debug

15 6 IN PMU_TO_IKTARA_EN_EXT_1V8
PP0700 P2MM-NSM 1 SM PP ROOM=TEST

6 IN IKTARA_ANA1
PP0701 P2MM-NSM 1 SM PP ROOM=TEST

6 IN IKTARA_GPIO3
PP0702 P2MM-NSM 1 SM PP ROOM=TEST

6 IN IKTARA_GPIO4
PP0703 P2MM-NSM 1 SM PP ROOM=TEST

15 6 IN IKTARA_TO_SMC_INT
PP0704 P2MM-NSM 1 SM PP ROOM=TEST

VDD_MAIN TRADEOFF CAPS

10 7 6 5 14 PP_VDD_MAIN
C0701 15UF 20% 6.3V X5R 0402-0.1MM-1
C0702 15UF 20% 6.3V X5R 0402-0.1MM-1

HARDWARE MT Pro

SYNC_DATE=11/01/2017

PAGE TITLE: SYSTEM: Testpoints (Bottom)

Apple Inc.

DRAWING NUMBER: 051-02695
SIZE: D
REVISION: 4.0.0
BRANCH:
PAGE: 7 OF 85
SHEET: 5 OF 47

NOTICE OF PROPRIETARY PROPERTY:

THE INFORMATION CONTAINED HEREIN IS THE PROPRIETARY PROPERTY OF APPLE INC.
THE POSESSOR AGREES TO THE FOLLOWING:
I TO MAINTAIN THIS DOCUMENT IN CONFIDENCE
II NOT TO REPRODUCE OR COPY IT
III NOT TO REVEAL OR PUBLISH IT IN WHOLE OR PART
IV ALL RIGHTS RESERVED

Iktara

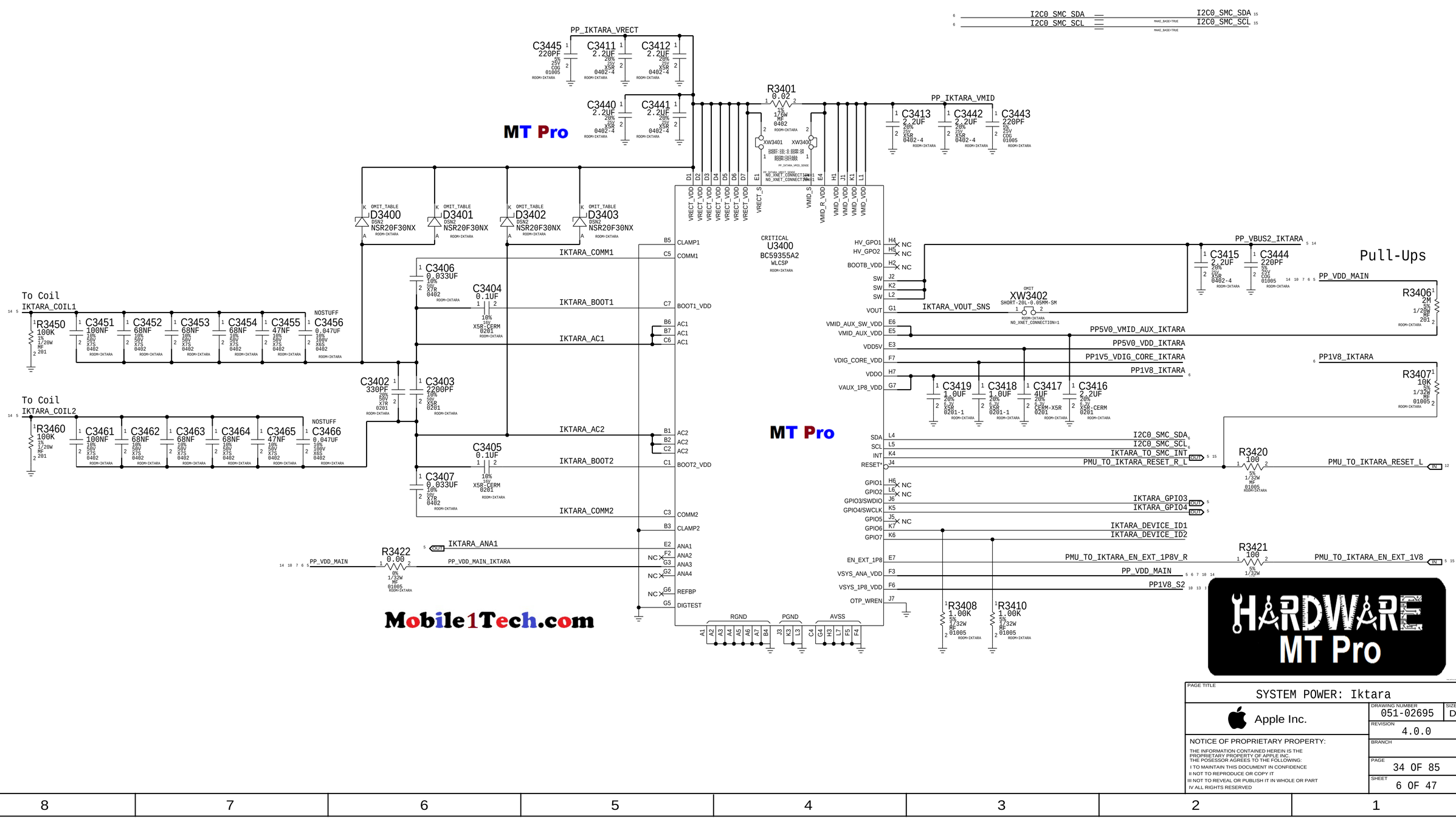

PAGE TITLE	SYSTEM POWER: Iktara
	Apple Inc.
DRAWING NUMBER	051-02695
SIZE	D
REVISION	4.0.0
BRANCH	
PAGE	34 OF 85
SHEET	6 OF 47

NOTICE OF PROPRIETARY PROPERTY:

THE INFORMATION CONTAINED HEREIN IS THE PROPRIETARY PROPERTY OF APPLE INC. THE POSESSOR AGREES TO THE FOLLOWING:

I TO MAINTAIN THIS DOCUMENT IN CONFIDENCE

II NOT TO REPRODUCE OR COPY IT

III NOT TO REVEAL OR PUBLISH IT IN WHOLE OR PART

IV ALL RIGHTS RESERVED

Acorn PMU

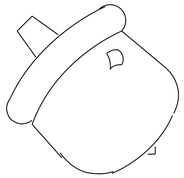

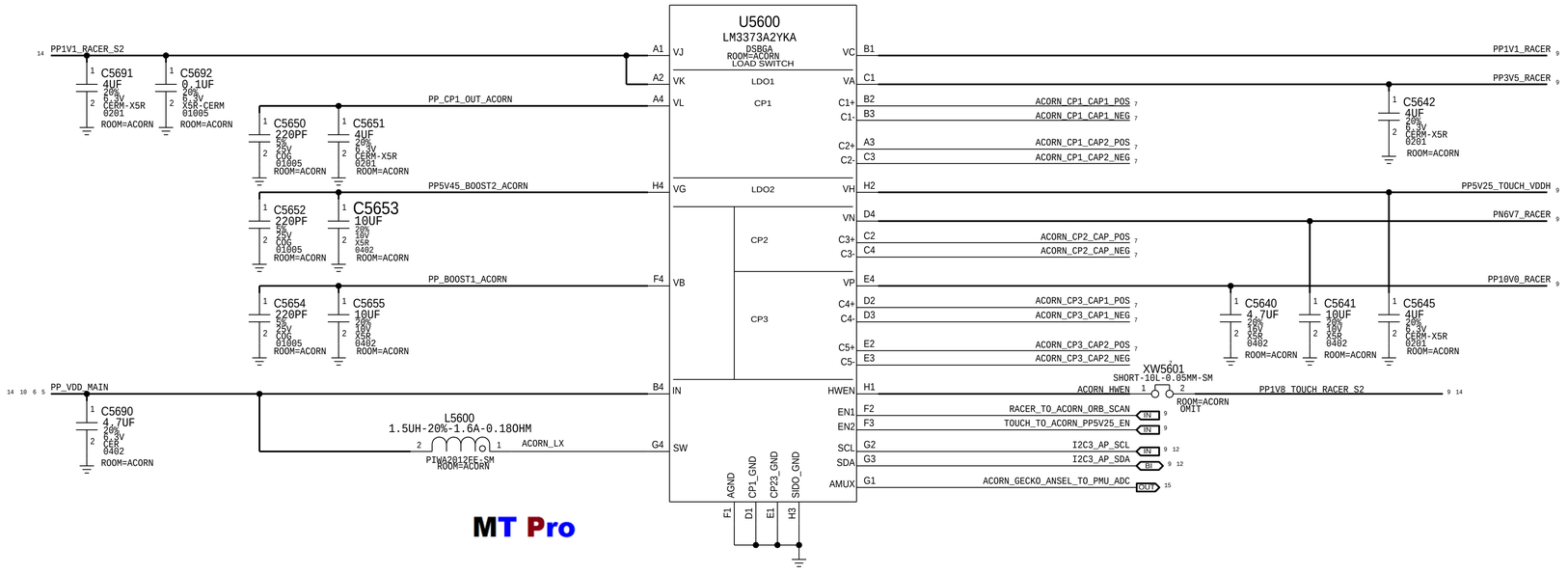

MT Pro

Charge Pump 1 Caps

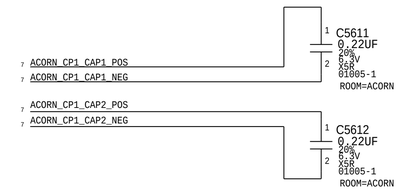

Charge Pump 2 Caps

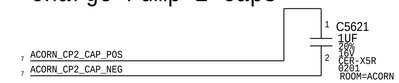

Charge Pump 3 Caps

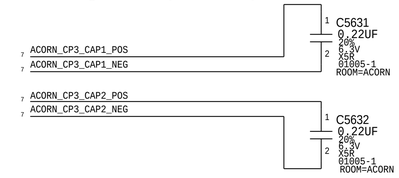

Mobile1Tech.com

PAGE TITLE	CG: Power Supplies - Touch & Display
Apple Inc.	DRAWING NUMBER 051-02695 SIZE D
	REVISION 4.0.0
	BRANCH
	PAGE 56 OF 85
	SHEET 7 OF 47

NOTICE OF PROPRIETARY PROPERTY:
THE INFORMATION CONTAINED HEREIN IS THE PROPRIETARY PROPERTY OF APPLE INC.
THE POSESSOR AGREES TO THE FOLLOWING:
I TO MAINTAIN THIS DOCUMENT IN CONFIDENCE
II NOT TO REPRODUCE OR COPY IT
III NOT TO REVEAL OR PUBLISH IT IN WHOLE OR PART
IV ALL RIGHTS RESERVED

Top Board Interposer APN:998-12513
Bot Board Interposer APN:998-12514 <--- Stuffed

MT Pro

J_INT_TOP
SMT-PAD
SYM 1 OF 2
INTERPOSER-MLB-TOP-V3-D32

11	GND	1	IO1	IO95	95 AP_TO_NFC_FW_DWLD_REQ 11
11	GND	2	IO2	IO96	96 GND 11
11	GND	3	IO3	IO97	97 PMU_TO_NFC_VDD_MAIN_EN 11
11	GND	4	IO4	IO98	98 UART_AOP_TO_BB_TXD 11
11	GND	5	IO5	IO99	99 GND 11
11	GND	6	IO6	IO100	100 UART_AP_TO_GNSS_TXD 11
11	PMU_TO_SYSTEM_COLD_RESET_L	7	IO7	IO101	101 GND 11
11	GND	8	IO8	IO102	102 AP_TO_BB_COREDUMP_TRIG 11
11	AP_TO_CAMPMU_RESET_L	9	IO9	IO103	103 UART_AP_TO_NFC_TXD 11
11	GND	10	IO10	IO104	104 UART_NFC_TO_AP_RXD 11
11	BB_TO_MANY_GSM_BURST_IND	11	IO11	IO105	105 BB_TO_AP_RESET_DETECT_L 11
11	GND	12	IO12	IO106	106 GND 11
11	HALL_CASE_TO_AOP_NORTH_L	13	IO13	IO107	107 BOARD_ID2 11
11	GND	14	IO14	IO108	108 AP_TO_GNSS_TIME_MARK 11
11	AP_TO_TOUCH_SCAN_CLK	15	IO15	IO109	109 PCIE_BB_BI_AP_CLKREQ_L 11
11	GND	16	IO16	IO110	110 AP_TO_BB_PEAK_POWER_INDICATOR 11
11	I2S_BB_TO_AP_BCLK	17	IO17	IO111	111 AP_TO_BBPMU_RADIO_ON_L 11
11	GND	18	IO18	IO112	112 PP_VDD_MAIN 11
11	I2S_BB_TO_AP_DIN	19	IO19	IO113	113 PP_VDD_MAIN 11
11	GND	20	IO20	IO114	114 PP_VDD_MAIN 11
11	I2S_AP_TO_BB_DOUT	21	IO21	IO115	115 GND 11
11	GND	22	IO22	IO116	116 GND 11
11	I2S_BB_TO_AP_LRCLK	23	IO23	IO117	117 GND 11
11	GND	24	IO24	IO118	118 90_PCIE_BB_TO_AP_RXD_N 11
11	PP1V8_ALWAYS	25	IO25	IO119	119 90_PCIE_BB_TO_AP_RXD_P 11
11	GND	26	IO26	IO120	120 GND 11
11	GND	27	IO27	IO121	121 90_PCIE_AP_TO_BB_TXD_N 11
11	GND	28	IO28	IO122	122 90_PCIE_AP_TO_BB_TXD_P 11
11	GND	29	IO29	IO123	123 GND 11
11	GND	30	IO30	IO124	124 90_PCIE_AP_TO_BB_REFCLK_P 11
11	GND	31	IO31	IO125	125 90_PCIE_AP_TO_BB_REFCLK_N 11
11	GND	32	IO32	IO126	126 GND 11
11	GND	33	IO33	IO127	127 UART_BB_TO_AOP_RXD 11
11	GND	34	IO34	IO128	128 UART_GNSS_TO_AP_RXD 11
11	GND	35	IO35	IO129	129 PCIE_AP_TO_BB_PERST_L 11
11	GND	36	IO36	IO130	130 GND 11
11	GND	37	IO37	IO131	131 PMU_AMUX_BY 11
11	GND	38	IO38	IO132	132 PMU_AMUX_AY 11
11	GND	39	IO39	IO133	133 GND 11
11	GND	40	IO40	IO134	134 UART_NFC_TO_AP_CTS_L 11
11	GND	41	IO41	IO135	135 UART_AP_TO_NFC_RTS_L 11
11	GND	42	IO42	IO136	136 BB_TO_AP_PEAK_POWER_INDICATOR 11
11	GND	43	IO43	IO137	137 GND 11
11	GND	44	IO44	IO138	138 PP_VDD_MAIN 11
11	GND	45	IO45	IO139	139 PP_VDD_MAIN 11
11	GND	46	IO46	IO140	140 PP_VDD_MAIN 11
11	GND	47	IO47	IO141	141 GND 11
11	GND	48	IO48	IO142	142 GND 11
11	GND	49	IO49	IO143	143 GND 11
11	NFC_TO_ARC_RESET_L	50	IO50	IO144	144 GND 11
11	GND	51	IO51	IO145	145 GND 12
11	NFC_TO_ARC_TRIG	52	IO52	IO146	146 GND 12
11	GND	53	IO53	IO147	147 GND 12
11	GND	54	IO54	IO148	148 GND 12
11	GND	55	IO55	IO149	149 GND 12
11	GND	56	IO56	IO150	150 GND 12
11	GND	57	IO57	IO151	151 GND 12
11	GND	58	IO58	IO152	152 GND 12
11	GND	59	IO59	IO153	153 GND 12
11	GND	60	IO60	IO154	154 PP_VDD_MAIN 12
11	GND	61	IO61	IO155	155 PP_VDD_MAIN 12
11	GND	62	IO62	IO156	156 GND 12
11	GND	63	IO63	IO157	157 PP_VDD_MAIN 12
11	GND	64	IO64	IO158	158 PP_VDD_MAIN 12
11	AP_TO_BB_RESET_L	65	IO65	IO159	159 GND 12
11	GND	66	IO66	IO160	160 PMU_TO_NFC_EN 12
11	SWD_AOP_BI_BB_SWDIO	67	IO67	IO161	161 GND 12
11	GND	68	IO68	IO162	162 PMU_TO_BBPMU_RESET_L 12
11	UART_GNSS_TO_AP_CTS_L	69	IO69	IO163	163 GND 12
11	GND	70	IO70	IO164	164 PMU_TO_TOUCH_CLK32K 12
11	UART_AP_TO_GNSS_RTS_L	71	IO71	IO165	165 GND 12
11	GND	72	IO72	IO166	166 PCIE_WLAN_BI_AP_CLKREQ_L 12
11	PCIE_AP_TO_WLAN_PERST_L	73	IO73	IO167	167 GND 12
11	GND	74	IO74	IO168	168 GND 12
11	AP_TO_RACER_RESET_L	75	IO75	IO169	169 BB_TO_PMU_PCIE_HOST_WAKE_L 12
11	GND	76	IO76	IO170	170 GND 12
11	AP_TO_WLAN_TIME_SYNC	77	IO77	IO171	171 GND 12
11	GND	78	IO78	IO172	172 WLAN_TO_PMU_HOST_WAKE 12
11	GNSS_TO_AP_LOW_PWR_IND	79	IO79	IO173	173 GND 12
11	GND	80	IO80	IO174	174 PMU_TO_WLAN_CLK32K 12
11	HYDRA_TO_AP_FORCE_DFU	81	IO81	IO175	175 GND 12
11	GND	82	IO82	IO176	176 NFC_TO_AOP_HOST_WAKE 12
11	PP1V8_S2	83	IO83	IO177	177 GND 12
11	PP1V8_S2	84	IO84	IO178	178 TOUCH_TO_MANY_FORCE_PWM 12
11	GND	85	IO85	IO179	179 GND 12
11	GND	86	IO86	IO180	180 UART_AP_TO_BT_TXD 12
11	GND	87	IO87	IO181	181 GND 12
11	GND	88	IO88	IO182	182 UART_AP_TO_BT_RTS_L 12
11	GND	89	IO89	IO183	183 GND 12
11	PP_VDD_MAIN_OV_R	90	IO90	IO184	184 GND 12
11	AP_TO_BB_COEX	91	IO91	IO185	185 GND 12
11	BB_TO_AP_COEX	92	IO92	IO186	186 GND 12
11	GND	93	IO93	IO187	187 GND 12
11	AP_TO_NFC_DEV_WAKE	94	IO94	IO188	188 GND 12

J_INT_TOP
SMT-PAD
SYM 2 OF 2
INTERPOSER-MLB-TOP-V3-D32

12	GND	189	IO189	IO282	282 GND 12
12	GND	190	IO190	IO283	283 GND 12
12	GND	191	IO191	IO284	284 GND 12
12	GND	192	IO192	IO285	285 GND 12
12	GND	193	IO193	IO286	286 GND 15
12	GND	194	IO194	IO287	287 ACORN_GECKO_ANSEL_TO_PMU_ADC 15
12	GND	195	IO195	IO288	288 GND 15
12	PP1V8_NFC_S2	196	IO196	IO289	289 RACER_TO_AOP_INT_L 15
12	PMU_TO_GNSS_EN	197	IO197	IO290	290 GND 15
12	PMU_TO_BT_REG_ON	198	IO198	IO291	291 HALL_CASE_TO_AOP_SOUTH_L 15
12	GND	199	IO199	IO292	292 GND 15
12	90_PCIE_AP_TO_WLAN_REFCLK_N	200	IO200	IO293	293 PMU_TO_IKTARA_EN_EXT_1V8 15
12	90_PCIE_AP_TO_WLAN_REFCLK_P	201	IO201	IO294	294 GND 15
12	GND	202	IO202	IO295	295 IKTARA_TO_SMC_INT 15
12	90_PCIE_AP_TO_WLAN_TXD_P	203	IO203	IO296	296 GND 15
12	90_PCIE_AP_TO_WLAN_TXD_N	204	IO204	IO297	297 I2C0_SMC_SCL 15
12	GND	205	IO205	IO298	298 I2C0_SMC_SDA 15
12	90_PCIE_WLAN_TO_AP_RXD_N	206	IO206	IO299	299 GND 15
12	90_PCIE_WLAN_TO_AP_RXD_P	207	IO207	IO300	300 IKTARA_COIL2 15
12	GND	208	IO208	IO301	301 IKTARA_COIL2 15
12	PP3V0_S2	209	IO209	IO302	302 IKTARA_COIL2 15
12	PP1V8_TOUCH_RACER_S2	210	IO210	IO303	303 IKTARA_COIL2 15
12	PP1V8_TOUCH_RACER_S2	211	IO211	IO304	304 IKTARA_COIL1 15
12	PMU_TO_WLAN_REG_ON	212	IO212	IO305	305 IKTARA_COIL1 15
12	RADIO_PA_NTC	213	IO213	IO306	306 IKTARA_COIL1 15
12	BT_TO_AP_TIME_SYNC	214	IO214	IO307	307 IKTARA_COIL1 15
12	UART_BT_TO_AP_RXD	215	IO215	IO308	308 GND 15
12	GND	216	IO216	IO309	309 GND 15
12	GND	217	IO217	IO310	310 GND 15
12	UART_BT_TO_AP_CTS_L	218	IO218	IO311	311 GND 15
12	GND	219	IO219	IO312	312 GND 15
12	GND	220	IO220	IO313	313 GND 15
12	GND	221	IO221	IO314	314 GND 15
12	GND	222	IO222	IO315	315 GND 15
12	GND	223	IO223	IO316	316 GND 15
12	GND	224	IO224	IO317	317 GND 15
12	GND	225	IO225	IO318	318 GND 15
12	GND	226	IO226	IO319	319 GND 15
12	GND	227	IO227	IO320	320 GND 15
12	GND	228	IO228	IO321	321 GND 15
12	REL_BIAS_VBUS_EN	229	IO229	IO322	322 GND 15
12	GND	230	IO230	IO323	323 GND 15
12	PP_GPU_LVCC	231	IO231	IO324	324 GND 15
12	GND	232	IO232	IO325	325 GND 15
12	PP_CPU_PCORE_LVCC	233	IO233	IO326	326 GND 15
12	GND	234	IO234	IO327	327 GND 15
12	PP_BATT_VCC	235	IO235	IO328	328 GND 15
12	PP_BATT_VCC	236	IO236	IO329	329 GND 15
12	GND	237	IO237	IO330	330 GND 15
12	AP_TO_BT_DEVICE_WAKE	238	IO238	IO331	331 GND 15
12	AOP_TO_WLAN_CONTEXT_A	239	IO239	IO332	332 GND 15
12	UART_AOP_TO_RACER_TXD	240	IO240	IO333	333 GND 15
12	SWD_AOP_TO_MANY_SWCLK	241	IO241	IO334	334 GND 15
12	SPI_AP_TO_RACER_MOSI	242	IO242	IO335	335 GND 15
12	SPI_AP_TO_RACER_SCLK	243	IO243	IO336	336 GND 15
12	PP1V1_RACER_S2	244	IO244	IO337	337 GND 15
12	PP1V1_RACER_S2	245	IO245	IO338	338 GND 15
12	PP1V1_RACER_S2	246	IO246	IO339	339 GND 15
12	AP_TO_RACER_REF_CLK	247	IO247	IO340	340 GND 15
12	GND	248	IO248	IO341	341 GND 15
12	AOP_TO_BBPMU_COEX	249	IO249	IO342	342 GND 15
12	PP_VBUS2_IKTARA	250	IO250	IO343	343 GND 15
12	PP_VBUS2_IKTARA	251	IO251	IO344	344 GND 15
12	PP_VBUS2_IKTARA	252	IO252	IO345	345 GND 15
12	PP_VBUS2_IKTARA	253	IO253	IO346	346 GND 15
12	GND	254	IO254	IO347	347 GND 15
12	AOP_TO_WLAN_CONTEXT_B	255	IO255	IO348	348 GND 15
12	GND	256	IO256	IO349	349 GND 15
12	UART_RACER_TO_AOP_RXD	257	IO257	IO350	350 GND 15
12	GND	258	IO258	IO351	351 GND 15
12	SPI_RACER_TO_AP_MISO	259	IO259	IO352	352 GND 15
12	GND	260	IO260	IO353	353 GND 15
12	SPI_AP_TO_RACER_CS_L	261	IO261	IO354	354 GND 15
12	GND	262	IO262	IO355	355 GND 15
12	PMU_TO_IKTARA_RESET_L	263	IO263	IO356	356 GND 15
12	GND	264	IO264	IO357	357 GND 15
12	SWD_AOP_BI_RACER_SWDIO	265	IO265	IO358	358 GND 15
12	GND	266	IO266		
12	I2C3_AP_SDA	267	IO267		
12	GND	268	IO268		
12	I2C3_AP_SCL	269	IO269		
12	GND	270	IO270		
12	GND	271	IO271		
12	GND	272	IO272		
12	GND	273	IO273		
12	GND	274	IO274		
12	GND	275	IO275		
12	GND	276	IO276		
12	GND	277	IO277		
12	GND	278	IO278		
12	GND	279	IO279		
12	GND	280	IO280		
12	GND	281	IO281		

HARDWARE MT Pro

PAGE TITLE
?

Apple Inc.

DRAWING NUMBER 051-02695
SIZE D
REVISION 4.0.0
BRANCH
PAGE 66 OF 85
SHEET 8 OF 47

NOTICE OF PROPRIETARY PROPERTY:
THE INFORMATION CONTAINED HEREIN IS THE PROPRIETARY PROPERTY OF APPLE INC.
THE POSESSOR AGREES TO THE FOLLOWING:
I TO MAINTAIN THIS DOCUMENT IN CONFIDENCE
II NOT TO REPRODUCE OR COPY IT
III NOT TO REVEAL OR PUBLISH IT IN WHOLE OR PART
IV ALL RIGHTS RESERVED

LOFT INTERPOSER

MT Pro

SELECTED --> 998-10998 ON MLB_LOFT_INT
998-10900 ON MLB_BOT

BOT INTERPOSER

J_LFT_TOP
INTERPOSER-RF-MLB-TOP-D33
SMT-PAD
SYM 1 OF 2

	1	IO1	IO75	75	
10 50_PRX_LB_PAD_LB2_SDR_IN_XCVR	2	IO2	IO76	76	
	3	IO3	IO77	77	PP1V8_TOUCH_RACER_S2 7 9 14
	4	IO4	IO78	78	
	5	IO5	IO79	79	
10 50_PRX_MB2_PAD_MB_B_SDR_IN_XCVR	6	IO6	IO80	80	PP1V8_TOUCH_RACER_S2 7 9 14
	7	IO7	IO81	81	
	8	IO8	IO82	82	PP10V0_RACER 7
	9	IO9	IO83	83	
10 50_PRX_MB1_PAD_MB_A_SDR_IN_XCVR	10	IO10	IO84	84	PN6V7_RACER 7
	11	IO11	IO85	85	
	12	IO12	IO86	86	
	13	IO13	IO87	87	
10 50_PRX_HB2_PAD_LHB_SDR_IN_XCVR	14	IO14	IO88	88	PP3V5_RACER 7
	15	IO15	IO89	89	LOFT_CANARY_2 10
	16	IO16	IO90	90	AP_TO_RACER_REF_CLK 12
	17	IO17	IO91	91	
10 50_PRX_HB1_PAD_HB_SDR_IN_XCVR	18	IO18	IO92	92	
	19	IO19	IO93	93	AP_TO_RACER_RESET_L 5 11
	20	IO20	IO94	94	RACER_TO_ACORN_ORB_SCAN 7
	21	IO21	IO95	95	AP_TO_TOUCH_SCAN_CLK 5 11
	22	IO22	IO96	96	UART_RACER_TO_AOP_RXD 5 12
	23	IO23	IO97	97	
	24	IO24	IO98	98	UART_AOP_TO_RACER_TXD 5 12
	25	IO25	IO99	99	SWD_AOP_TO_MANY_SWCLK 10 12
	26	IO26	IO100	100	SWD_AOP_BI_RACER_SWDIO 9 12
10 LOFT_CANARY_1	27	IO27	IO101	101	SPI_AP_TO_RACER_MOSI 12
	28	IO28	IO102	102	
	29	IO29	IO103	103	RACER_TO_AOP_INT_L 5 15
10 SHIELD_RFFE_RX_SDATA	30	IO30	IO104	104	SPI_AP_TO_RACER_SCLK 12
	31	IO31	IO105	105	
10 SHIELD_RFFE_RX_SCLK	32	IO32	IO106	106	SPI_RACER_TO_AP_MISO 12
	33	IO33	IO107	107	TOUCH_TO_ACORN_PP5V25_EN 7
	34	IO34	IO108	108	SPI_AP_TO_RACER_CS_L 12
	35	IO35	IO109	109	TOUCH_TO_MANY_FORCE_PWM 5 10 12
	36	IO36	IO110	110	
10 PP_1V8_VIO	37	IO37	IO111	111	I2C3_AP_SDA 7 12
	38	IO38	IO112	112	CKPLUS_WAIVE=I2C_PULLUP
10 SHIELD_RFFE_TX_SDATA	39	IO39	IO113	113	
	40	IO40	IO114	114	
10 SHIELD_RFFE_TX_SCLK	41	IO41	IO115	115	
	42	IO42	IO116	116	
	43	IO43	IO117	117	PP5V25_TOUCH_VDDH 7
	44	IO44	IO118	118	I2C3_AP_SCL 7 12
	45	IO45	IO119	119	PMU_TO_TOUCH_CLK32K 5 12
	46	IO46	IO120	120	CKPLUS_WAIVE=I2C_PULLUP
	47	IO47	IO121	121	PP1V1_RACER 7 9
	48	IO48	IO122	122	PP1V1_RACER 7 9
	49	IO49	IO123	123	
	50	IO50	IO124	124	50_LBPAD_2G_OUT_CPL2_IN_JPN 10
	51	IO51	IO125	125	
10 9 PP_ET_PA	52	IO52	IO126	126	50_HBPAD_2G_OUT_CPL2_IN_JPN 10
10 9 PP_ET_PA	53	IO53	IO127	127	
10 9 PP_ET_PA	54	IO54	IO128	128	50_PAD_ANT_HB_CPL2_IN 10
10 9 PP_ET_PA	55	IO55	IO129	129	
10 9 PP_ET_PA	56	IO56	IO130	130	50_PAD_ANT_LB_CPL2_IN 10
	57	IO57	IO131	131	
	58	IO58	IO132	132	50_TDD_PAD_ANT_HB_CPL2_IN 10
	59	IO59	IO133	133	
	60	IO60	IO134	134	PP_VBATT_PA 10
	61	IO61	IO135	135	
10 PP_1V8_VBIAS_LNA	62	IO62	IO136	136	
	63	IO63	IO137	137	
	64	IO64	IO138	138	50_TX_2G_HB_IN 10
	65	IO65	IO139	139	
	66	IO66	IO140	140	50_TX_MB1_IN 10
	67	IO67	IO141	141	
	68	IO68	IO142	142	50_TX_HB_PA_IN 10
	69	IO69	IO143	143	
	70	IO70	IO144	144	
10 50_TX_LB_PA_IN	71	IO71	IO145	145	
	72	IO72			
	73	IO73			
	74	IO74			

10 PP_1V2_VDD_LNA

J_LFT_TOP
INTERPOSER-RF-MLB-TOP-D33
SMT-PAD
SYM 2 OF 2

146	IO146	
147	IO147	
148	IO148	
149	IO149	
150	IO150	
151	IO151	
152	IO152	
153	IO153	
154	IO154	
155	IO155	
156	IO156	
157	IO157	
158	IO158	
159	IO159	
160	IO160	
161	IO161	
162	IO162	
163	IO163	
164	IO164	
165	IO165	
166	IO166	
167	IO167	
168	IO168	

SWD_AOP_BI_RACER_SWDIO 9 12

R7701
100K
5%
1/32W
MF
01005

Moved here from Loft

Mobile1Tech.com

SVC_PAT=06/07/2017

PAGE TITLE
B2B: Interposer Loft

Apple Inc.

DRAWING NUMBER 051-02695
SIZE D
REVISION 4.0.0
BRANCH
PAGE 77 OF 85
SHEET 9 OF 47

NOTICE OF PROPRIETARY PROPERTY:
THE INFORMATION CONTAINED HEREIN IS THE PROPRIETARY PROPERTY OF APPLE INC.
THE POSESSOR AGREES TO THE FOLLOWING:
I TO MAINTAIN THIS DOCUMENT IN CONFIDENCE
II NOT TO REPRODUCE OR COPY IT
III NOT TO REVEAL OR PUBLISH IT IN WHOLE OR PART
IV ALL RIGHTS RESERVED

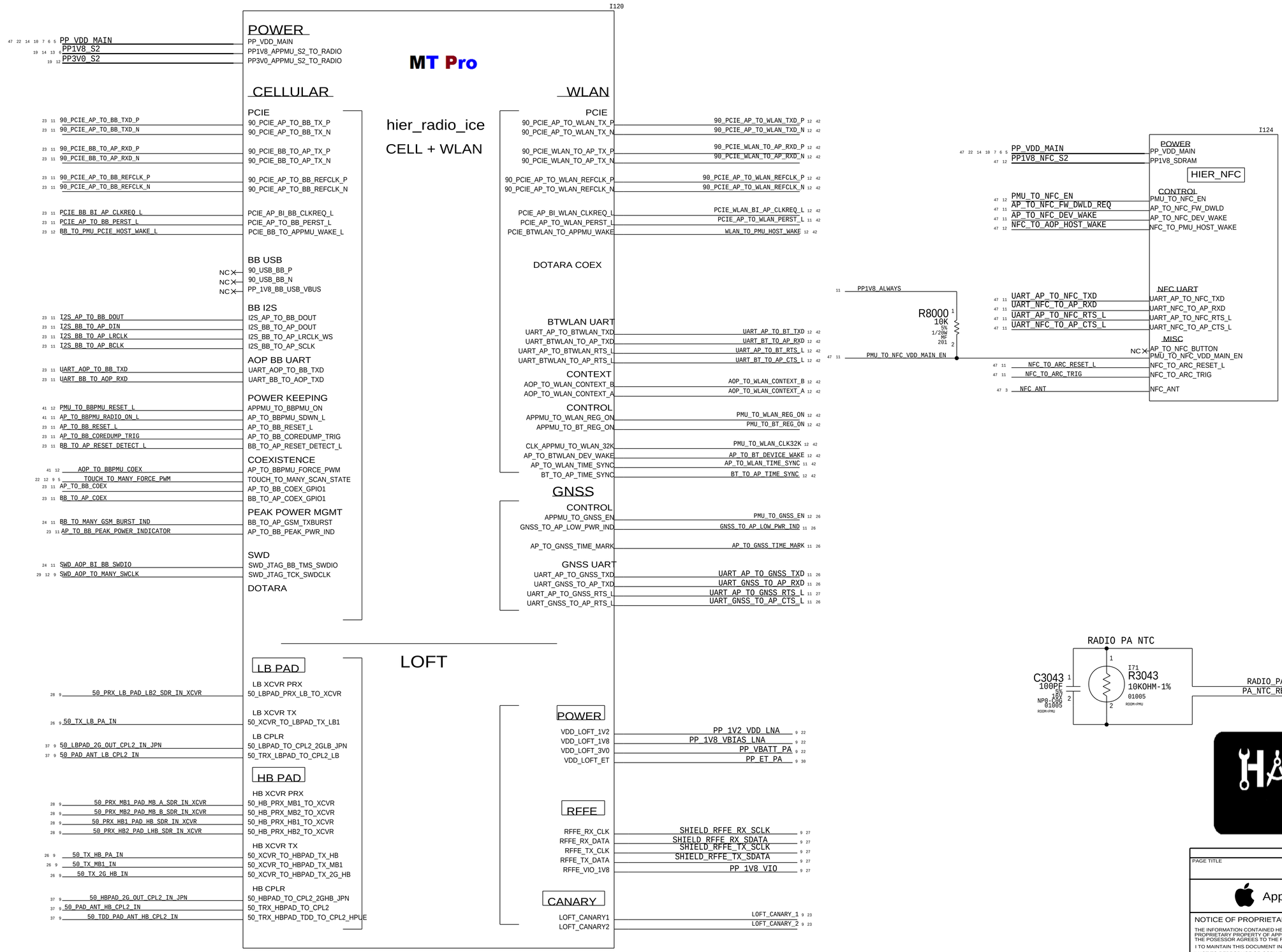
I120
POWER
PP_VDD_MAIN
PP1V8_APPMU_S2_TO_RADIO
PP3V0_APPMU_S2_TO_RADIO
MT Pro
hier_radio_ice
CELL + WLAN
CELLULAR
PCIE
90_PCIE_AP_TO_BB_TX_P
90_PCIE_AP_TO_BB_TX_N
90_PCIE_BB_TO_AP_TX_P
90_PCIE_BB_TO_AP_TX_N
90_PCIE_AP_TO_BB_REFCLK_P
90_PCIE_AP_TO_BB_REFCLK_N
PCIE_AP_BI_BB_CLKREQ_L
PCIE_AP_TO_BB_PERST_L
PCIE_BB_TO_APPMU_WAKE_L
BB USB
90_USB_BB_P
90_USB_BB_N
PP_1V8_BB_USB_VBUS
BB I2S
I2S_AP_TO_BB_DOUT
I2S_BB_TO_AP_DOUT
I2S_BB_TO_AP_LRCLK_WS
I2S_BB_TO_AP_SCLK
AOP BB UART
UART_AOP_TO_BB_TXD
UART_BB_TO_AOP_TXD
POWER KEEPING
APPMU_TO_BBPMU_ON
AP_TO_BBPMU_SDWN_L
AP_TO_BB_RESET_L
AP_TO_BB_COREDUMP_TRIG
BB_TO_AP_RESET_DETECT_L
COEXISTENCE
AP_TO_BBPMU_FORCE_PWM
TOUCH_TO_MANY_SCAN_STATE
AP_TO_BB_COEX_GPIO1
BB_TO_AP_COEX_GPIO1
PEAK POWER MGMT
BB_TO_AP_GSM_TXBURST
AP_TO_BB_PEAK_PWR_IND
SWD
SWD_JTAG_BB_TMS_SWDIO
SWD_JTAG_TCK_SWDCLK
DOTARA
WLAN
PCIE
90_PCIE_AP_TO_WLAN_TX_P
90_PCIE_AP_TO_WLAN_TX_N
90_PCIE_WLAN_TO_AP_TX_P
90_PCIE_WLAN_TO_AP_TX_N
90_PCIE_AP_TO_WLAN_REFCLK_P
90_PCIE_AP_TO_WLAN_REFCLK_N
PCIE_AP_TO_WLAN_PERST_L
PCIE_BTWLAN_TO_APPMU_WAKE
DOTARA COEX
BTWLAN UART
UART_AP_TO_BTWLAN_TXD
UART_BTWLAN_TO_AP_TXD
UART_AP_TO_BTWLAN_RTS_L
UART_BTWLAN_TO_AP_RTS_L
CONTEXT
AOP_TO_WLAN_CONTEXT_B
AOP_TO_WLAN_CONTEXT_A
CONTROL
APPMU_TO_WLAN_REG_ON
APPMU_TO_BT_REG_ON
CLK_APPMU_TO_WLAN_32K
AP_TO_BTWLAN_DEV_WAKE
AP_TO_WLAN_TIME_SYNC
BT_TO_AP_TIME_SYNC
GNSS
CONTROL
APPMU_TO_GNSS_EN
GNSS_TO_AP_LOW_PWR_IND
AP_TO_GNSS_TIME_MARK
GNSS UART
UART_AP_TO_GNSS_TXD
UART_GNSS_TO_AP_TXD
UART_AP_TO_GNSS_RTS_L
UART_GNSS_TO_AP_RTS_L
LOFT
LB PAD
LB XCVR PRX
50_LBPAD_PRX_LB_TO_XCVR
LB XCVR TX
50_XCVR_TO_LBPAD_TX_LB1
LB CPLR
50_LBPAD_TO_CPL2_2GLB_JPN
50_TRX_LBPAD_TO_CPL2_LB
HB PAD
HB XCVR PRX
50_HB_PRX_MB1_TO_XCVR
50_HB_PRX_MB2_TO_XCVR
50_HB_PRX_HB1_TO_XCVR
50_HB_PRX_HB2_TO_XCVR
HB XCVR TX
50_XCVR_TO_HBPAD_TX_HB
50_XCVR_TO_HBPAD_TX_MB1
50_XCVR_TO_HBPAD_TX_2G_HB
HB CPLR
50_HBPAD_TO_CPL2_2GHB_JPN
50_TRX_HBPAD_TO_CPL2
50_TRX_HBPAD_TDD_TO_CPL2_HPUE
POWER
VDD_LOFT_1V2
VDD_LOFT_1V8
VDD_LOFT_3V0
VDD_LOFT_ET
RFFE
RFFE_RX_CLK
RFFE_RX_DATA
RFFE_TX_CLK
RFFE_TX_DATA
RFFE_VIO_1V8
CANARY
LOFT_CANARY1
LOFT_CANARY2
I124
POWER
PP_VDD_MAIN
PP1V8_SDRAM
HIER_NFC
CONTROL
PMU_TO_NFC_EN
AP_TO_NFC_FW_DWLD_REQ
AP_TO_NFC_DEV_WAKE
NFC_TO_AOP_HOST_WAKE
NFC UART
UART_AP_TO_NFC_TXD
UART_NFC_TO_AP_RXD
UART_AP_TO_NFC_RTS_L
UART_NFC_TO_AP_CTS_L
MISC
AP_TO_NFC_BUTTON
PMU_TO_NFC_VDD_MAIN_EN
NFC_TO_ARC_RESET_L
NFC_TO_ARC_TRIG
NFC_ANT
PP1V8_ALWAYS
R8000
10K
5%
1/20W
MF
201
PMU_TO_NFC_VDD_MAIN_EN
RADIO PA NTC
C3043
100PF
50V
C0G
NP0-C0G
01005
I71
R3043
10KOHM-1%
01005
OMIT
XW3043
SHORT-20L-0.05MM-SM
RADIO_PA_NTC
PA_NTC_RETURN
HARDWARE
MT Pro
SYNC_DATE=03/31/2017
PAGE TITLE
RADIOS
Apple Inc.
DRAWING NUMBER
051-02695
SIZE
D
REVISION
4.0.0
BRANCH
PAGE
80 OF 85
SHEET
10 OF 47
NOTICE OF PROPRIETARY PROPERTY:
THE INFORMATION CONTAINED HEREIN IS THE PROPRIETARY PROPERTY OF APPLE INC.
THE POSESSOR AGREES TO THE FOLLOWING:
I TO MAINTAIN THIS DOCUMENT IN CONFIDENCE
II NOT TO REPRODUCE OR COPY IT
III NOT TO REVEAL OR PUBLISH IT IN WHOLE OR PART
IV ALL RIGHTS RESERVED

Interposer Aliases: Pins 1-144

MT Pro

THIS SIDE HAS ATTRIBUTE
MAKE_BASE=TRUE

GND	MAKE_BASE=TRUE	GND	11 12 14 15
GND	MAKE_BASE=TRUE	GND	11 12 14 15
GND	MAKE_BASE=TRUE	GND	11 12 14 15
GND	MAKE_BASE=TRUE	GND	11 12 14 15
GND	MAKE_BASE=TRUE	GND	11 12 14 15
GND	MAKE_BASE=TRUE	GND	11 12 14 15
PMU_TO_SYSTEM_COLD_RESET_L	MAKE_BASE=TRUE	PMU_TO_SYSTEM_COLD_RESET_L	5
GND	MAKE_BASE=TRUE	GND	11 12 14 15
AP_TO_CAMPMU_RESET_L	MAKE_BASE=TRUE	AP_TO_CAMPMU_RESET_L	5
GND	MAKE_BASE=TRUE	GND	11 12 14 15
BB_TO_MANY_GSM_BURST_IND	MAKE_BASE=TRUE	BB_TO_MANY_GSM_BURST_IND	10
GND	MAKE_BASE=TRUE	GND	11 12 14 15
HALL_CASE_TO_AOP_NORTH_L	MAKE_BASE=TRUE	HALL_CASE_TO_AOP_NORTH_L	13
GND	MAKE_BASE=TRUE	GND	11 12 14 15
AP_TO_TOUCH_SCAN_CLK	MAKE_BASE=TRUE	AP_TO_TOUCH_SCAN_CLK	5 9
GND	MAKE_BASE=TRUE	GND	11 12 14 15
I2S_BB_TO_AP_BCLK	MAKE_BASE=TRUE	I2S_BB_TO_AP_BCLK	10
GND	MAKE_BASE=TRUE	GND	11 12 14 15
I2S_BB_TO_AP_DIN	MAKE_BASE=TRUE	I2S_BB_TO_AP_DIN	10
GND	MAKE_BASE=TRUE	GND	11 12 14 15
I2S_AP_TO_BB_DOUT	MAKE_BASE=TRUE	I2S_AP_TO_BB_DOUT	10
GND	MAKE_BASE=TRUE	GND	11 12 14 15
I2S_BB_TO_AP_LRCLK	MAKE_BASE=TRUE	I2S_BB_TO_AP_LRCLK	10
GND	MAKE_BASE=TRUE	GND	11 12 14 15
PP1V8_ALWAYS	MAKE_BASE=TRUE	PP1V8_ALWAYS	10
GND	MAKE_BASE=TRUE	GND	11 12 14 15
GND	MAKE_BASE=TRUE	GND	11 12 14 15
GND	MAKE_BASE=TRUE	GND	14
GND	MAKE_BASE=TRUE	GND	14
GND	MAKE_BASE=TRUE	GND	14
GND	MAKE_BASE=TRUE	GND	11 14
GND	MAKE_BASE=TRUE	GND	11 14
GND	MAKE_BASE=TRUE	GND	11 14
GND	MAKE_BASE=TRUE	GND	11 14
GND	MAKE_BASE=TRUE	GND	11 14
GND	MAKE_BASE=TRUE	GND	11 14
GND	MAKE_BASE=TRUE	GND	11 14
GND	MAKE_BASE=TRUE	GND	11 14
GND	MAKE_BASE=TRUE	GND	11 14
GND	MAKE_BASE=TRUE	GND	11 14
GND	MAKE_BASE=TRUE	GND	11 14
GND	MAKE_BASE=TRUE	GND	11 14
GND	MAKE_BASE=TRUE	GND	11 14
GND	MAKE_BASE=TRUE	GND	11 14
NFC_TO_ARC_RESET_L	MAKE_BASE=TRUE	NFC_TO_ARC_RESET_L	10
GND	MAKE_BASE=TRUE	GND	11 14
NFC_TO_ARC_TRIG	MAKE_BASE=TRUE	NFC_TO_ARC_TRIG	10
GND	MAKE_BASE=TRUE	GND	11 14
GND	MAKE_BASE=TRUE	GND	11 14
GND	MAKE_BASE=TRUE	GND	11 14
GND	MAKE_BASE=TRUE	GND	11 14
GND	MAKE_BASE=TRUE	GND	11 14
GND	MAKE_BASE=TRUE	GND	11 14
GND	MAKE_BASE=TRUE	GND	11 14
GND	MAKE_BASE=TRUE	GND	11 14
GND	MAKE_BASE=TRUE	GND	11 14
GND	MAKE_BASE=TRUE	GND	11 14
GND	MAKE_BASE=TRUE	GND	14
AP_TO_BB_RESET_L	MAKE_BASE=TRUE	AP_TO_BB_RESET_L	10
GND	MAKE_BASE=TRUE	GND	11 14
SWD_AOP_BI_BB_SWDIO	MAKE_BASE=TRUE	SWD_AOP_BI_BB_SWDIO	10
GND	MAKE_BASE=TRUE	GND	11 14
UART_GNSS_TO_AP_CTS_L	MAKE_BASE=TRUE	UART_GNSS_TO_AP_CTS_L	10
GND	MAKE_BASE=TRUE	GND	11 14
UART_AP_TO_GNSS_RTS_L	MAKE_BASE=TRUE	UART_AP_TO_GNSS_RTS_L	10
GND	MAKE_BASE=TRUE	GND	11 14

THIS SIDE HAS ATTRIBUTE
MAKE_BASE=TRUE

PCIE_AP_TO_WLAN_PERST_L	MAKE_BASE=TRUE	PCIE_AP_TO_WLAN_PERST_L	10
GND	MAKE_BASE=TRUE	GND	11 14
AP_TO_RACER_RESET_L	MAKE_BASE=TRUE	AP_TO_RACER_RESET_L	5 9
GND	MAKE_BASE=TRUE	GND	11 14
AP_TO_WLAN_TIME_SYNC	MAKE_BASE=TRUE	AP_TO_WLAN_TIME_SYNC	10
GND	MAKE_BASE=TRUE	GND	11 14
GNSS_TO_AP_LOW_PWR_IND	MAKE_BASE=TRUE	GNSS_TO_AP_LOW_PWR_IND	10
GND	MAKE_BASE=TRUE	GND	11 14
HYDRA_TO_AP_FORCE_DFU	MAKE_BASE=TRUE	HYDRA_TO_AP_FORCE_DFU	5
GND	MAKE_BASE=TRUE	GND	11 14
PP1V8_S2	MAKE_BASE=TRUE	PP1V8_S2	14
PP1V8_S2	MAKE_BASE=TRUE	PP1V8_S2	14
GND	MAKE_BASE=TRUE	GND	11 14
GND	MAKE_BASE=TRUE	GND	14
GND	MAKE_BASE=TRUE	GND	14
GND	MAKE_BASE=TRUE	GND	14
GND	MAKE_BASE=TRUE	GND	11 12 14
PP_VDD_MAIN_OV_R	MAKE_BASE=TRUE	PP_VDD_MAIN_OV_R	5
AP_TO_BB_COEX	MAKE_BASE=TRUE	AP_TO_BB_COEX	10
BB_TO_AP_COEX	MAKE_BASE=TRUE	BB_TO_AP_COEX	10
GND	MAKE_BASE=TRUE	GND	14
AP_TO_NFC_DEV_WAKE	MAKE_BASE=TRUE	AP_TO_NFC_DEV_WAKE	10
AP_TO_NFC_FW_DWLD_REQ	MAKE_BASE=TRUE	AP_TO_NFC_FW_DWLD_REQ	10
GND	MAKE_BASE=TRUE	GND	14
PMU_TO_NFC_VDD_MAIN_EN	MAKE_BASE=TRUE	PMU_TO_NFC_VDD_MAIN_EN	10
UART_AOP_TO_BB_TXD	MAKE_BASE=TRUE	UART_AOP_TO_BB_TXD	10
GND	MAKE_BASE=TRUE	GND	14
UART_AP_TO_GNSS_TXD	MAKE_BASE=TRUE	UART_AP_TO_GNSS_TXD	10
GND	MAKE_BASE=TRUE	GND	14
AP_TO_BB_COREDUMP_TRIG	MAKE_BASE=TRUE	AP_TO_BB_COREDUMP_TRIG	10
UART_AP_TO_NFC_TXD	MAKE_BASE=TRUE	UART_AP_TO_NFC_TXD	10
UART_NFC_TO_AP_RXD	MAKE_BASE=TRUE	UART_NFC_TO_AP_RXD	10
BB_TO_AP_RESET_DETECT_L	MAKE_BASE=TRUE	BB_TO_AP_RESET_DETECT_L	10
GND	MAKE_BASE=TRUE	GND	14
BOARD_ID2	MAKE_BASE=TRUE	BOARD_ID2	4
AP_TO_GNSS_TIME_MARK	MAKE_BASE=TRUE	AP_TO_GNSS_TIME_MARK	10
PCIE_BB_BI_AP_CLKREQ_L	MAKE_BASE=TRUE	PCIE_BB_BI_AP_CLKREQ_L	10
AP_TO_BB_PEAK_POWER_INDICATOR	MAKE_BASE=TRUE	AP_TO_BB_PEAK_POWER_INDICATOR	10
AP_TO_BBPMU_RADIO_ON_L	MAKE_BASE=TRUE	AP_TO_BBPMU_RADIO_ON_L	10
PP_VDD_MAIN	MAKE_BASE=TRUE	PP_VDD_MAIN	14
PP_VDD_MAIN	MAKE_BASE=TRUE	PP_VDD_MAIN	14
PP_VDD_MAIN	MAKE_BASE=TRUE	PP_VDD_MAIN	14
GND	MAKE_BASE=TRUE	GND	11 12 14
GND	MAKE_BASE=TRUE	GND	11 14
GND	MAKE_BASE=TRUE	GND	11 14
90_PCIE_BB_TO_AP_RXD_N	MAKE_BASE=TRUE	90_PCIE_BB_TO_AP_RXD_N	10
90_PCIE_BB_TO_AP_RXD_P	MAKE_BASE=TRUE	90_PCIE_BB_TO_AP_RXD_P	10
GND	MAKE_BASE=TRUE	GND	11 14
90_PCIE_AP_TO_BB_TXD_N	MAKE_BASE=TRUE	90_PCIE_AP_TO_BB_TXD_N	10
90_PCIE_AP_TO_BB_TXD_P	MAKE_BASE=TRUE	90_PCIE_AP_TO_BB_TXD_P	10
GND	MAKE_BASE=TRUE	GND	11 14
90_PCIE_AP_TO_BB_REFCLK_P	MAKE_BASE=TRUE	90_PCIE_AP_TO_BB_REFCLK_P	10
90_PCIE_AP_TO_BB_REFCLK_N	MAKE_BASE=TRUE	90_PCIE_AP_TO_BB_REFCLK_N	10
GND	MAKE_BASE=TRUE	GND	11 14
UART_BB_TO_AOP_RXD	MAKE_BASE=TRUE	UART_BB_TO_AOP_RXD	10
UART_GNSS_TO_AP_RXD	MAKE_BASE=TRUE	UART_GNSS_TO_AP_RXD	10
PCIE_AP_TO_BB_PERST_L	MAKE_BASE=TRUE	PCIE_AP_TO_BB_PERST_L	10
GND	MAKE_BASE=TRUE	GND	11 14
PMU_AMUX_BY	MAKE_BASE=TRUE	PMU_AMUX_BY	5
PMU_AMUX_AY	MAKE_BASE=TRUE	PMU_AMUX_AY	5
GND	MAKE_BASE=TRUE	GND	11 14
UART_NFC_TO_AP_CTS_L	MAKE_BASE=TRUE	UART_NFC_TO_AP_CTS_L	10
UART_AP_TO_NFC_RTS_L	MAKE_BASE=TRUE	UART_AP_TO_NFC_RTS_L	10
BB_TO_AP_PEAK_POWER_INDICATOR	MAKE_BASE=TRUE	BB_TO_AP_PEAK_POWER_INDICATOR	
GND	MAKE_BASE=TRUE	GND	11 14
PP_VDD_MAIN	MAKE_BASE=TRUE	PP_VDD_MAIN	14
PP_VDD_MAIN	MAKE_BASE=TRUE	PP_VDD_MAIN	14
PP_VDD_MAIN	MAKE_BASE=TRUE	SIG_NAME=PP_VDD_MAIN	14
GND	MAKE_BASE=TRUE	GND	11 12 14
GND	MAKE_BASE=TRUE	GND	11 12 14
GND	MAKE_BASE=TRUE	GND	11 12 14
GND	MAKE_BASE=TRUE	GND	11 12 14

HARDWARE MT Pro

SYNC_DATE=11/02/2017

PAGE TITLE
Interposer: Pins 1-144

Apple Inc.

DRAWING NUMBER 051-02695
SIZE D
REVISION 4.0.0
BRANCH
PAGE 81 OF 85
SHEET 11 OF 47

NOTICE OF PROPRIETARY PROPERTY:
THE INFORMATION CONTAINED HEREIN IS THE PROPRIETARY PROPERTY OF APPLE INC.
THE POSESSOR AGREES TO THE FOLLOWING:
I TO MAINTAIN THIS DOCUMENT IN CONFIDENCE
II NOT TO REPRODUCE OR COPY IT
III NOT TO REVEAL OR PUBLISH IT IN WHOLE OR PART
IV ALL RIGHTS RESERVED

Interposer Aliases: Pins 145-285

THIS SIDE HAS ATTRIBUTE
MAKE_BASE=TRUE

GND	MAKE_BASE=TRUE	GND	11 12 14
GND	MAKE_BASE=TRUE	GND	11 12 14
GND	MAKE_BASE=TRUE	GND	11 14 15
GND	MAKE_BASE=TRUE	GND	11 12 14
GND	MAKE_BASE=TRUE	GND	11 12 14
GND	MAKE_BASE=TRUE	GND	11 12 14
GND	MAKE_BASE=TRUE	GND	11 12 14
GND	MAKE_BASE=TRUE	GND	11 12 14
GND	MAKE_BASE=TRUE	GND	11 12 14
PP_VDD_MAIN	MAKE_BASE=TRUE	PP_VDD_MAIN	14
PP_VDD_MAIN	MAKE_BASE=TRUE	PP_VDD_MAIN	14
GND	MAKE_BASE=TRUE	GND	11 12 14
PP_VDD_MAIN	MAKE_BASE=TRUE	PP_VDD_MAIN	14
PP_VDD_MAIN	MAKE_BASE=TRUE	PP_VDD_MAIN	14
GND	MAKE_BASE=TRUE	GND	11 12 14
PMU_TO_NFC_EN	MAKE_BASE=TRUE	PMU_TO_NFC_EN	10
GND	MAKE_BASE=TRUE	GND	11 12 14
PMU_TO_BBPMU_RESET_L	MAKE_BASE=TRUE	PMU_TO_BBPMU_RESET_L	10
GND	MAKE_BASE=TRUE	GND	11 12 14
PMU_TO_TOUCH_CLK32K	MAKE_BASE=TRUE	PMU_TO_TOUCH_CLK32K	5 9
GND	MAKE_BASE=TRUE	GND	11 12 14
PCIE_WLAN_BI_AP_CLKREQ_L	MAKE_BASE=TRUE	PCIE_WLAN_BI_AP_CLKREQ_L	10
GND	MAKE_BASE=TRUE	GND	11 12 14
GND	MAKE_BASE=TRUE	GND	11 12 14
BB_TO_PMU_PCIE_HOST_WAKE_L	MAKE_BASE=TRUE	BB_TO_PMU_PCIE_HOST_WAKE_L	10
GND	MAKE_BASE=TRUE	GND	11 12 14
GND	MAKE_BASE=TRUE	GND	11 12 14
WLAN_TO_PMU_HOST_WAKE	MAKE_BASE=TRUE	WLAN_TO_PMU_HOST_WAKE	10
GND	MAKE_BASE=TRUE	GND	11 12 14
PMU_TO_WLAN_CLK32K	MAKE_BASE=TRUE	PMU_TO_WLAN_CLK32K	10
GND	MAKE_BASE=TRUE	GND	11 12 14
NFC_TO_AOP_HOST_WAKE	MAKE_BASE=TRUE	NFC_TO_AOP_HOST_WAKE	10
GND	MAKE_BASE=TRUE	GND	11 12 14
TOUCH_TO_MANY_FORCE_PWM	MAKE_BASE=TRUE	TOUCH_TO_MANY_FORCE_PWM	5 9 10
GND	MAKE_BASE=TRUE	GND	11 12 14
UART_AP_TO_BT_TXD	MAKE_BASE=TRUE	UART_AP_TO_BT_TXD	10
GND	MAKE_BASE=TRUE	GND	11 12 14
UART_AP_TO_BT_RTS_L	MAKE_BASE=TRUE	UART_AP_TO_BT_RTS_L	10
GND	MAKE_BASE=TRUE	GND	11 12 14
GND	MAKE_BASE=TRUE	GND	11 12 14
GND	MAKE_BASE=TRUE	GND	11 12 14
GND	MAKE_BASE=TRUE	GND	11 12 14
GND	MAKE_BASE=TRUE	GND	11 12 14
GND	MAKE_BASE=TRUE	GND	11 12 14
GND	MAKE_BASE=TRUE	GND	11 12 14
GND	MAKE_BASE=TRUE	GND	14
GND	MAKE_BASE=TRUE	GND	14
GND	MAKE_BASE=TRUE	GND	14
GND	MAKE_BASE=TRUE	GND	14
GND	MAKE_BASE=TRUE	GND	14
GND	MAKE_BASE=TRUE	GND	12 14
PP1V8_NFC_S2	MAKE_BASE=TRUE	PP1V8_NFC_S2	10
PMU_TO_GNSS_EN	MAKE_BASE=TRUE	PMU_TO_GNSS_EN	10
PMU_TO_BT_REG_ON	MAKE_BASE=TRUE	PMU_TO_BT_REG_ON	10
GND	MAKE_BASE=TRUE	GND	12 14
90Ω PCIE_AP_TO_WLAN_REFCLK_N	MAKE_BASE=TRUE	90_PCIE_AP_TO_WLAN_REFCLK_N	10
90Ω PCIE_AP_TO_WLAN_REFCLK_P	MAKE_BASE=TRUE	90_PCIE_AP_TO_WLAN_REFCLK_P	10
GND	MAKE_BASE=TRUE	GND	12 14
90_PCIE_AP_TO_WLAN_TXD_P	MAKE_BASE=TRUE	90_PCIE_AP_TO_WLAN_TXD_P	10
90_PCIE_AP_TO_WLAN_TXD_N	MAKE_BASE=TRUE	90_PCIE_AP_TO_WLAN_TXD_N	10
GND	MAKE_BASE=TRUE	GND	12 14
90_PCIE_WLAN_TO_AP_RXD_N	MAKE_BASE=TRUE	90_PCIE_WLAN_TO_AP_RXD_N	10
90_PCIE_WLAN_TO_AP_RXD_P	MAKE_BASE=TRUE	90_PCIE_WLAN_TO_AP_RXD_P	10
GND	MAKE_BASE=TRUE	GND	12 14
PP3V0_S2	MAKE_BASE=TRUE	PP3V0_S2	10
PP1V8_TOUCH_RACER_S2	MAKE_BASE=TRUE	PP1V8_TOUCH_RACER_S2	14
PP1V8_TOUCH_RACER_S2	MAKE_BASE=TRUE	PP1V8_TOUCH_RACER_S2	14
PMU_TO_WLAN_REG_ON	MAKE_BASE=TRUE	PMU_TO_WLAN_REG_ON	10
RADIO_PA_NTC	MAKE_BASE=TRUE	RADIO_PA_NTC	10
BT_TO_AP_TIME_SYNC	MAKE_BASE=TRUE	BT_TO_AP_TIME_SYNC	10
UART_BT_TO_AP_RXD	MAKE_BASE=TRUE	UART_BT_TO_AP_RXD	10

THIS SIDE HAS ATTRIBUTE
MAKE_BASE=TRUE

GND	MAKE_BASE=TRUE	GND	12 14
GND	MAKE_BASE=TRUE	GND	12 14
UART_BT_TO_AP_CTS_L	MAKE_BASE=TRUE	UART_BT_TO_AP_CTS_L	10
GND	MAKE_BASE=TRUE	GND	12 14
GND	MAKE_BASE=TRUE	GND	12 14
GND	MAKE_BASE=TRUE	GND	12 14
GND	MAKE_BASE=TRUE	GND	12 14
GND	MAKE_BASE=TRUE	GND	12 14
GND	MAKE_BASE=TRUE	GND	12 14
GND	MAKE_BASE=TRUE	GND	12 14
GND	MAKE_BASE=TRUE	GND	12 14
GND	MAKE_BASE=TRUE	GND	14
GND	MAKE_BASE=TRUE	GND	14
REL_BIAS_VBUS_EN	MAKE_BASE=TRUE	REL_BIAS_VBUS_EN	5
GND	MAKE_BASE=TRUE	GND	12 14
PP_GPU_LVCC	MAKE_BASE=TRUE	PP_GPU_LVCC	5
GND	MAKE_BASE=TRUE	GND	12 14
PP_CPU_PCORE_LVCC	MAKE_BASE=TRUE	PP_CPU_PCORE_LVCC	5
GND	MAKE_BASE=TRUE	GND	12 14
PP_BATT_VCC	MAKE_BASE=TRUE	PP_BATT_VCC	14
PP_BATT_VCC	MAKE_BASE=TRUE	PP_BATT_VCC	14
GND	MAKE_BASE=TRUE	GND	14
AP_TO_BT_DEVICE_WAKE	MAKE_BASE=TRUE	AP_TO_BT_DEVICE_WAKE	10
AOP_TO_WLAN_CONTEXT_A	MAKE_BASE=TRUE	AOP_TO_WLAN_CONTEXT_A	10
UART_AOP_TO_RACER_TXD	MAKE_BASE=TRUE	UART_AOP_TO_RACER_TXD	5 9
SWD_AOP_TO_MANY_SWCLK	MAKE_BASE=TRUE	SWD_AOP_TO_MANY_SWCLK	9 10
SPI_AP_TO_RACER_MOSI	MAKE_BASE=TRUE	SPI_AP_TO_RACER_MOSI	9
SPI_AP_TO_RACER_SCLK	MAKE_BASE=TRUE	SPI_AP_TO_RACER_SCLK	9
PP1V1_RACER_S2	MAKE_BASE=TRUE	PP1V1_RACER_S2	14
PP1V1_RACER_S2	MAKE_BASE=TRUE	PP1V1_RACER_S2	14
PP1V1_RACER_S2	MAKE_BASE=TRUE	PP1V1_RACER_S2	14
AP_TO_RACER_REF_CLK	MAKE_BASE=TRUE	AP_TO_RACER_REF_CLK	9
GND	MAKE_BASE=TRUE	GND	14
AOP_TO_BBPMU_COEX	MAKE_BASE=TRUE	AOP_TO_BBPMU_COEX	10
PP_VBUS2_IKTARA	MAKE_BASE=TRUE	PP_VBUS2_IKTARA	14
PP_VBUS2_IKTARA	MAKE_BASE=TRUE	PP_VBUS2_IKTARA	14
PP_VBUS2_IKTARA	MAKE_BASE=TRUE	PP_VBUS2_IKTARA	14
PP_VBUS2_IKTARA	MAKE_BASE=TRUE	PP_VBUS2_IKTARA	14
GND	MAKE_BASE=TRUE	GND	12 14
AOP_TO_WLAN_CONTEXT_B	MAKE_BASE=TRUE	AOP_TO_WLAN_CONTEXT_B	10
GND	MAKE_BASE=TRUE	GND	12 14
UART_RACER_TO_AOP_RXD	MAKE_BASE=TRUE	UART_RACER_TO_AOP_RXD	5 9
GND	MAKE_BASE=TRUE	GND	12 14
SPI_RACER_TO_AP_MISO	MAKE_BASE=TRUE	SPI_RACER_TO_AP_MISO	9
GND	MAKE_BASE=TRUE	GND	12 14
SPI_AP_TO_RACER_CS_L	MAKE_BASE=TRUE	SPI_AP_TO_RACER_CS_L	9
GND	MAKE_BASE=TRUE	GND	12 14
PMU_TO_IKTARA_RESET_L	MAKE_BASE=TRUE	PMU_TO_IKTARA_RESET_L	6
GND	MAKE_BASE=TRUE	GND	12 14
SWD_AOP_BI_RACER_SWDIO	MAKE_BASE=TRUE	SWD_AOP_BI_RACER_SWDIO	9
GND	MAKE_BASE=TRUE	GND	12 14
I2C3_AP_SDA	MAKE_BASE=TRUE	I2C3_AP_SDA	CKPLUS_WAIVE=I2C_PULLUP 7 9
GND	MAKE_BASE=TRUE	GND	12 14
I2C3_AP_SCL	MAKE_BASE=TRUE	I2C3_AP_SCL	CKPLUS_WAIVE=I2C_PULLUP 7 9
GND	MAKE_BASE=TRUE	GND	12 14
GND	MAKE_BASE=TRUE	GND	12 14
GND	MAKE_BASE=TRUE	GND	12 14
GND	MAKE_BASE=TRUE	GND	12 14
GND	MAKE_BASE=TRUE	GND	12 14
GND	MAKE_BASE=TRUE	GND	12 14
GND	MAKE_BASE=TRUE	GND	12 14
GND	MAKE_BASE=TRUE	GND	12 14
GND	MAKE_BASE=TRUE	GND	12 14
GND	MAKE_BASE=TRUE	GND	12 14
GND	MAKE_BASE=TRUE	GND	12 14
GND	MAKE_BASE=TRUE	GND	12 14
GND	MAKE_BASE=TRUE	GND	12 14
GND	MAKE_BASE=TRUE	GND	12 14
GND	MAKE_BASE=TRUE	GND	12 14
GND	MAKE_BASE=TRUE	GND	12 14
GND	MAKE_BASE=TRUE	GND	12 14
GND	MAKE_BASE=TRUE	GND	12 14
GND	MAKE_BASE=TRUE	GND	12 14
GND	MAKE_BASE=TRUE	GND	12 14

HARDWARE MT Pro

SYNC_DATE=11/02/2017

PAGE TITLE

Interposer: Pins 145-285

Apple Inc.

DRAWING NUMBER 051-02695 SIZE D

REVISION 4.0.0

BRANCH

PAGE 82 OF 85

SHEET 12 OF 47

NOTICE OF PROPRIETARY PROPERTY:

THE INFORMATION CONTAINED HEREIN IS THE PROPRIETARY PROPERTY OF APPLE INC.
THE POSESSOR AGREES TO THE FOLLOWING:
I TO MAINTAIN THIS DOCUMENT IN CONFIDENCE
II NOT TO REPRODUCE OR COPY IT
III NOT TO REVEAL OR PUBLISH IT IN WHOLE OR PART
IV ALL RIGHTS RESERVED

HARDWARE MT Pro

SYNC_DATE=11/02/2017

PAGE TITLE

Hall

Apple Inc.

DRAWING NUMBER 051-02695

SIZE D

REVISION 4.0.0

BRANCH

PAGE 83 OF 85

SHEET 13 OF 47

NOTICE OF PROPRIETARY PROPERTY:

THE INFORMATION CONTAINED HEREIN IS THE PROPRIETARY PROPERTY OF APPLE INC.
THE POSESSOR AGREES TO THE FOLLOWING:
I TO MAINTAIN THIS DOCUMENT IN CONFIDENCE
II NOT TO REPRODUCE OR COPY IT
III NOT TO REVEAL OR PUBLISH IT IN WHOLE OR PART
IV ALL RIGHTS RESERVED

CDS_LTB=apple

Interposer Top Level Aliases

MT Pro

Power Aliases

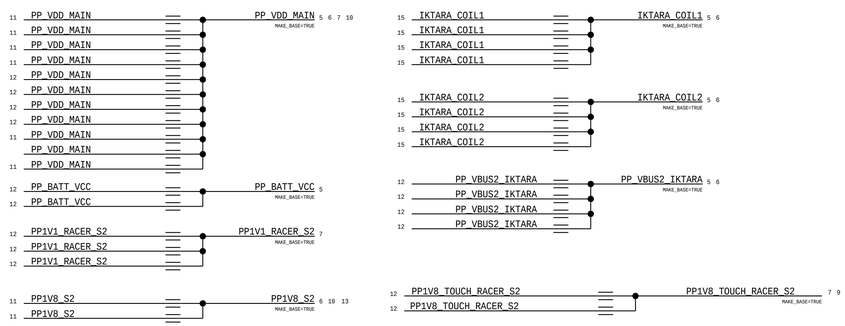

Ground Aliases

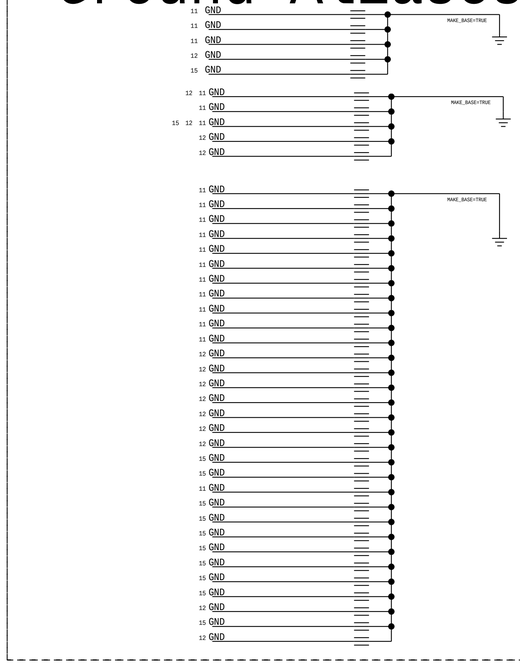

HARDWARE MT Pro

SYNC_DATE=11/01/2017

PAGE TITLE	Interposer: Top Aliases
Apple Inc.	DRAWING NUMBER 051-02695 SIZE D
	REVISION 4.0.0
	BRANCH
	PAGE 84 OF 85
	SHEET 14 OF 47

NOTICE OF PROPRIETARY PROPERTY:
THE INFORMATION CONTAINED HEREIN IS THE PROPRIETARY PROPERTY OF APPLE INC.
THE POSESSOR AGREES TO THE FOLLOWING:
I TO MAINTAIN THIS DOCUMENT IN CONFIDENCE
II NOT TO REPRODUCE OR COPY IT
III NOT TO REVEAL OR PUBLISH IT IN WHOLE OR PART
IV ALL RIGHTS RESERVED

THIS SIDE HAS ATTRIBUTE
MAKE_BASE=TRUE

GND	MAKE_BASE=TRUE	GND	14 15		
ACORN_GECKO_ANSEL_TO_PMU_ADC	MAKE_BASE=TRUE	ACORN_GECKO_ANSEL_TO_PMU_ADC	7		
GND	MAKE_BASE=TRUE	GND	14 15		
RACER_TO_AOP_INT_L	MAKE_BASE=TRUE	RACER_TO_AOP_INT_L	5 9		
GND	MAKE_BASE=TRUE	GND	14 15		
HALL_CASE_TO_AOP_SOUTH_L	MAKE_BASE=TRUE	HALL_CASE_TO_AOP_SOUTH_L	13		
GND	MAKE_BASE=TRUE	GND	14 15		
PMU_TO_IKTARA_EN_EXT_1V8	MAKE_BASE=TRUE	PMU_TO_IKTARA_EN_EXT_1V8	5 6		
GND	MAKE_BASE=TRUE	GND	14 15		
IKTARA_TO_SMC_INT	MAKE_BASE=TRUE	IKTARA_TO_SMC_INT	5 6		
GND	MAKE_BASE=TRUE	GND	14		
I2C0_SMC_SCL	MAKE_BASE=TRUE	I2C0_SMC_SCL	CKPLUS_WAIVE=I2C_PULLUP		
I2C0_SMC_SDA	MAKE_BASE=TRUE	I2C0_SMC_SDA	CKPLUS_WAIVE=I2C_PULLUP		
GND	MAKE_BASE=TRUE	GND	14		
IKTARA_COIL2	MAKE_BASE=TRUE	IKTARA_COIL2	14		
IKTARA_COIL2	MAKE_BASE=TRUE	IKTARA_COIL2	14		
IKTARA_COIL2	MAKE_BASE=TRUE	IKTARA_COIL2	14		
IKTARA_COIL2	MAKE_BASE=TRUE	IKTARA_COIL2	14		
IKTARA_COIL1	MAKE_BASE=TRUE	IKTARA_COIL1	14		
IKTARA_COIL1	MAKE_BASE=TRUE	IKTARA_COIL1	14		
IKTARA_COIL1	MAKE_BASE=TRUE	IKTARA_COIL1	14		
IKTARA_COIL1	MAKE_BASE=TRUE	IKTARA_COIL1	14		
GND	MAKE_BASE=TRUE	GND	14 15		
GND	MAKE_BASE=TRUE	GND			
GND	MAKE_BASE=TRUE	GND	14 15		
GND	MAKE_BASE=TRUE	GND			
GND	MAKE_BASE=TRUE	GND	14 15		
GND	MAKE_BASE=TRUE	GND	14		
GND	MAKE_BASE=TRUE	GND	14 15

1. ALL RESISTANCE VALUES ARE IN OHMS, 0.1 WATT +/- 5%.
2. ALL CAPACITANCE VALUES ARE IN MICROFARADS.
3. ALL CRYSTALS & OSCILLATOR VALUES ARE IN HERTZ.

REV	ECN	DESCRIPTION OF REVISION	CK APPD / DATE
4	0011669799	ENGINEERING RELEASED	2018-03-16

D33 HIER_RADIO_ICE - EVT

LAST_MODIFICATION=Fri Mar 16 10:21:01 2018

PAGE	CSA	CONTENTS	SYNC	DATE
16	1	RADIO: TABLE OF CONTENTS		
17	2	BOM TABLES		
18	3	ANTENNA DIAGRAM		
19	4	ANTENNA: B2BS		
20	5	ANTENNA: N-PLEX SHARED		
21	6	BBPMU: CONTROL		
22	7	BBPMU: RAILS		
23	8	BB: INTERFACE		
24	9	BB: DDR PWR & JTAG		
25	10	BB: DIGITAL PWR		
26	11	XCVR: TX & GNSS		
27	12	XCVR: INTERFACE & PWR		
28	13	XCVR: PRX DRX		
29	14	HW CONFIG OPTIONS		
30	15	ET		
31	16	LB SPAD		
32	17	HB SPAD		
33	18	UHB LMB SPAD		
34	19	LB DIVERSITY RECEIVE LNA		
35	20	HB DIVERSITY RECEIVE LNA		
36	21	MIMO RECEIVE LNAS		
37	22	COUPLER + LOWER ANTENNA		
38	23	UPPER ANTENNA FEEDS		
39	24	SIM: ESIM		
40	25	SIM: PSIM		
41	26	TEST POINTS		
42	27	SYMBOL: WIFI		
43	1	WIFI: TABLE OF CONTENTS		
44	2	DIETCOKE		
45	3	FEM MODULES		

41 37 33 30 27 SHIELD_RFFE_TX_SCLK-10[I120]
41 37 33 30 27 SHIELD_RFFE_TX_SDATA-10[I120]
27 SHIELD_RFFE_RX_SDATA-10[I120]
27 SHIELD_RFFE_RX_SCLK-10[I120]

Mobile1Tech.com

SOURCE PROJECT	SUB-DESIGN NAME	VERSION	HARD/SOFT	SYNC_DATE/TIME
D32	HIER_WIFI	0.52.0	S	2018_03_07_13:05:02

SCH:951-04720
PCB:920-03588

LOFT ALIASES

22 PP_1V2_VDD_LNA-10[I120] — PP_1V2_VDD_LNA = PP_1V2_VDD_LNA 16 — MAKE_BASE=TRUE
PP_1V8_VBIAS_LNA = PP_1V8_VBIAS_LNA 16 — MAKE_BASE=TRUE
33 / 32 PP_VBATT_PA-10[I120] / 37 / 37 — PP_VBATT_PA = PP_VBATT_PA 16 — MAKE_BASE=TRUE
30 PP_ET_PA-10[I120] / 33 — PP_ET_PA = PP_ET_PA 16 — MAKE_BASE=TRUE
33 30 27 / 41 36 / 35 PP_1V8_VIO-10[I120] / 42 / 54 — PP_1V8_VIO = PP_1V8_VIO 16 — MAKE_BASE=TRUE
SHIELD_RFFE_TX_SCLK = SHIELD_RFFE_TX_SCLK 16 — MAKE_BASE=TRUE
SHIELD_RFFE_TX_SDATA = SHIELD_RFFE_TX_SDATA 16 — MAKE_BASE=TRUE
SHIELD_RFFE_RX_SDATA = SHIELD_RFFE_RX_SDATA 16 — MAKE_BASE=TRUE
SHIELD_RFFE_RX_SCLK = SHIELD_RFFE_RX_SCLK 16 — MAKE_BASE=TRUE

LOFT

PMIC:POWER & I/O
16 IN PP_1V2_VDD_LNA
16 IN PP_1V8_VBIAS_LNA
16 IN PP_VBATT_PA
16 IN PP_ET_PA

BB:RFFE
16 IN PP_1V8_VIO
16 IN SHIELD_RFFE_TX_SCLK
16 IN SHIELD_RFFE_TX_SDATA
16 IN SHIELD_RFFE_RX_SDATA
16 IN SHIELD_RFFE_RX_SCLK

XCVR
26 18 IN 50_TX_LB_PA_IN
32 / 29 IN 50_PRX_LB_PAD_LB2_SDR_IN_XCVR

CPLR
37 18 IN 50_LBPAD_2G_OUT_CPL2_IN_JPN
37 / 37 IN 50_PAD_ANT_LB_CPL2_IN

HB PAD
26 18 IN 50_TX_HB_PA_IN
26 18 IN 50_TX_MB1_IN
26 18 IN 50_TX_2G_HB_IN

XCVR
32 / 29 IN 50_PRX_MB1_PAD_MB_A_SDR_IN_XCVR
28 18 IN 50_PRX_MB2_PAD_MB_B_SDR_IN_XCVR
28 18 IN 50_PRX_HB1_PAD_HB_SDR_IN_XCVR
28 18 IN 50_PRX_HB2_PAD_LHB_SDR_IN_XCVR

CPLR
37 18 IN 50_HBPAD_2G_OUT_CPL2_IN_JPN
37 / 37 IN 50_PAD_ANT_HB_CPL2_IN
37 18 IN 50_TDD_PAD_ANT_HB_CPL2_IN

CNRY
41 / 26 IN LOFT_CANARY_1
41 23 18 IN LOFT_CANARY_2

SYSTEM POWER

POWER
30 22 19 / 42 41 IO PP_VDD_MAIN
41 19 18 / 42 IO PP1V8_S2
41 19 18 IO PP3V0_S2

WLAN INTERPOSER

CONTROL
42 18 IO PMU_TO_WLAN_REG_ON
42 18 IO PMU_TO_BT_REG_ON
42 18 IO AP_TO_BT_DEVICE_WAKE

CLOCKS
42 18 IO PMU_TO_WLAN_CLK32K
42 18 IO AP_TO_WLAN_TIME_SYNC
42 18 IO BT_TO_AP_TIME_SYNC

WLAN PCIE
42 18 IO 90_PCIE_AP_TO_WLAN_REFCLK_P
42 18 IO 90_PCIE_AP_TO_WLAN_REFCLK_N
42 18 IO 90_PCIE_AP_TO_WLAN_TXD_P
42 18 IO 90_PCIE_AP_TO_WLAN_TXD_N
42 18 IO 90_PCIE_WLAN_TO_AP_RXD_P
42 18 IO 90_PCIE_WLAN_TO_AP_RXD_N
42 18 IO PCIE_AP_TO_WLAN_PERST_L
42 18 IO PCIE_WLAN_BI_AP_CLKREQ_L
42 18 IO WLAN_TO_PMU_HOST_WAKE

BLWLAN UART
42 18 IO UART_AP_TO_BT_TXD
42 18 IO UART_BT_TO_AP_RXD
42 18 IO UART_AP_TO_BT_RTS_L
42 18 IO UART_BT_TO_AP_CTS_L

AOP
42 18 IO AOP_TO_WLAN_CONTEXT_A
42 18 IO AOP_TO_WLAN_CONTEXT_B

CELLULAR INTERPOSER

POWER-KEEPING
41 21 18 IO PMU_TO_BBPMU_RESET_L
41 23 18 IO AP_TO_BB_RESET_L
41 23 18 IO AP_TO_BBPMU_RADIO_ON_L
41 21 18 IO AP_TO_BB_COREDUMP_TRIG
41 23 18 IO BB_TO_AP_RESET_DETECT_L

PCIE
41 23 18 IO BB_TO_PMU_PCIE_HOST_WAKE_L
41 23 18 IO PCIE_AP_TO_BB_PERST_L
41 29 23 18 IO PCIE_BB_BI_AP_CLKREQ_L
41 23 18 IO 90_PCIE_BB_TO_AP_RXD_P
23 18 IO 90_PCIE_BB_TO_AP_RXD_N
23 18 IO 90_PCIE_AP_TO_BB_TXD_P
41 23 18 IO 90_PCIE_AP_TO_BB_TXD_N
41 23 18 IO 90_PCIE_AP_TO_BB_REFCLK_P
41 23 18 IO 90_PCIE_AP_TO_BB_REFCLK_N

I2S
41 23 18 IO I2S_BB_TO_AP_BCLK
41 23 18 IO I2S_BB_TO_AP_LRCLK
41 23 18 IO I2S_AP_TO_BB_DOUT
41 23 18 IO I2S_BB_TO_AP_DIN

AOP UART
41 23 18 IO UART_BB_TO_AOP_RXD
41 23 18 IO UART_AOP_TO_BB_TXD

JTAG-SWD
29 18 IO SWD_AOP_TO_MANY_SWCLK
41 24 18 IO SWD_AOP_BI_BB_SWDIO

DEBUG USB
41 23 IO 90_USB_BB_P
41 23 IO 90_USB_BB_N
41 23 IO PP_1V8_BB_USB_VBUS

SYSTEM COEX
41 22 18 IO TOUCH_TO_MANY_FORCE_PWM
41 21 18 IO AOP_TO_BBPMU_COEX
41 23 18 IO AP_TO_BB_COEX
41 23 18 IO BB_TO_AP_COEX

PEAK POWER MANAGEMENT
41 24 18 IO BB_TO_MANY_GSM_BURST_IND
41 23 18 IO AP_TO_BB_PEAK_POWER_INDICATOR

GNSS
41 26 18 IO UART_AP_TO_GNSS_TXD
41 26 18 IO UART_GNSS_TO_AP_RXD
41 27 18 IO UART_AP_TO_GNSS_RTS_L
41 26 18 IO UART_GNSS_TO_AP_CTS_L
41 26 21 18 IO PMU_TO_GNSS_EN
41 26 18 IO AP_TO_GNSS_TIME_MARK
41 26 18 IO GNSS_TO_AP_LOW_PWR_IND

HARDWARE MT Pro

RADIO: TABLE OF CONTENTS

DRAWING TITLE	SCH,MLB,BOT,ICE,D33
Apple Inc.	DRAWING NUMBER 051-02695 / SIZE D
	REVISION 4.0.0
	BRANCH
	PAGE 1 OF 27
	SHEET 16 OF 47

NOTICE OF PROPRIETARY PROPERTY:
THE INFORMATION CONTAINED HEREIN IS THE PROPRIETARY PROPERTY OF APPLE INC.
THE POSESSOR AGREES TO THE FOLLOWING:
I TO MAINTAIN THIS DOCUMENT IN CONFIDENCE
II NOT TO REPRODUCE OR COPY IT
III NOT TO REVEAL OR PUBLISH IT IN WHOLE OR PART
IV ALL RIGHTS RESERVED

BOM TABLES

RF SKU

ROW SKU

PART#	QTY	DESCRIPTION	REFERENCE DESIGNATOR(S)	BOM OPTION
118S0724	1	RES,MF,0.0 OHM,1/20W,0201,HIGH FREQ	R2003_K	ROW
118S0724	1	RES,MF,0.0 OHM,1/20W,0201,HIGH,FREQ	R2015_K	ROW
118S00072	1	RES,MF,8.2K OHM,1/32W,01005	R312_K	ROW
197S00155	1	XTL,THERM,38.4MHZ,12PPM,6PF,1612	Y301_K	ROW
353S01647	1	2GPA, SKYWORKS, 7820B, REV13	PA_UHB_K	ROW
353S01301	1	SKYWORKS, LB DSM, 13765, REV16	DSM_LB_K	ROW

JP SKU

PART#	QTY	DESCRIPTION	REFERENCE DESIGNATOR(S)	BOM OPTION
118S0724	1	RES,MF,0.0 OHM,1/20W,0201,HIGH FREQ	R2002_K	JP
118S0724	1	RES,MF,0.0 OHM,1/20W,0201,HIGH,FREQ	R1403_K	JP
118S00120	1	RES,MF,6.8K OHM,1/32W,01005	R312_K	JP
197S00179	1	XTL,THERM,38.4MHZ,12PPM,6PF,1612	Y301_K	JP
353S01662	1	SKYWORKS, UHB PA, REV13	PA_UHB_K	JP
353S01301	1	SKYWORKS, LB DSM, 13765, REV16	DSM_LB_K	JP

NA SKU

PART#	QTY	DESCRIPTION	REFERENCE DESIGNATOR(S)	BOM OPTION
118S0724	1	RES,MF,0.0 OHM,1/20W,0201,HIGH FREQ	R2003_K	NA
118S0724	1	RES,MF,0.0 OHM,1/20W,0201,HIGH,FREQ	R2015_K	NA
118S00073	1	RES,MF,56K OHM,1/32W,01005	R312_K	NA
197S00156	1	XTL,THERM,38.4MHZ,12PPM,6PF,1612	Y301_K	NA
353S01647	1	2GPA, SKYWORKS, 7820B, REV13	PA_UHB_K	NA
353S01472	1	SKYWORKS, LB DSM, 13785, REV13	DSM_LB_K	NA

SIM SKU

SINGLE 4FF SKU

PART#	QTY	DESCRIPTION	REFERENCE DESIGNATOR(S)	BOM OPTION
512S00038	1	SIM,TALL,PTH,4X3,D33	J_SIM	SINGLE
117S0158	1	RES,MF,100K OHM,1/32W,01005	R11_SIM	SINGLE

DUAL 4FF SKU

PART#	QTY	DESCRIPTION	REFERENCE DESIGNATOR(S)	BOM OPTION
512S00039	1	SIM,DUAL,BUNK,PTH,4X3,D33	J_SIM	DUAL
117S0161	1	RES,MF,0.0 OHM,1/32W,01005	R31_SIM	DUAL
117S0166	1	RES,MF,100 OHM,1/32W,01005	R27_SIM	DUAL
117S0185	1	RES,MF,47 OHM,1/32W,01005	R26_SIM	DUAL
117S0166	1	RES,MF,100 OHM,1/32W,01005	R29_SIM	DUAL

SINGLE 4FF + VINYL SKU

PART#	QTY	DESCRIPTION	REFERENCE DESIGNATOR(S)	BOM OPTION
512S00038	1	SIM,TALL,PTH,4X3,D33	J_SIM	VINYL
998-12938	1	VINYL,NI0,BIRCH 4.0	U_SIM	VINYL
117S0158	1	RES,MF,100K OHM,1/32W,01005	R10_SIM	VINYL
118S0636	1	RES,MF,4.7K OHM,1/32W,01005	R12_SIM	VINYL

FERRITE ALTERNATES

PART NUMBER	ALTERNATE FOR PART NUMBER	BOM OPTION	REF DES	COMMENTS:
155S00131	155S00341	BOM_TABLE_ALTS	FL900_K	FERR BD, 240OHM
155S00414	155S0876	BOM_TABLE_ALTS	ALL	FERR BD, 100HM
155S00200	155S00400	BOM_TABLE_ALTS	ALL	FERR BD, 1500HM
155S00194	155S00400	BOM_TABLE_ALTS	ALL	FERR BD, 1500HM

ETIC CAP ALTERNATES

PART NUMBER	ALTERNATE FOR PART NUMBER	BOM OPTION	REF DES	COMMENTS:
138S00237	138S00167	BOM_TABLE_ALTS	C1204_K	CAP,2.2UF
138S00237	138S00167	BOM_TABLE_ALTS	C1205_K	CAP,2.2UF
138S00237	138S00167	BOM_TABLE_ALTS	C1206_K	CAP,2.2UF

CAP ALTERNATES

PART NUMBER	ALTERNATE FOR PART NUMBER	BOM OPTION	REF DES	COMMENTS:
138S00086	138S0884	BOM_TABLE_ALTS	ALL	CAP,20UF
138S0719	138S1103	BOM_TABLE_ALTS	ALL	CAP,4.7UF
138S00128	138S00133	BOM_TABLE_ALTS	ALL	CAP,0.47UF

VARISTOR ALTERNATES

PART NUMBER	ALTERNATE FOR PART NUMBER	BOM OPTION	REF DES	COMMENTS:
377S00130	377S0106	BOM_TABLE_ALTS	ALL	VARISTOR,12V,33PF

EEPROM ALTERNATES

PART NUMBER	ALTERNATE FOR PART NUMBER	BOM OPTION	REF DES	COMMENTS:
335S00013	335S0894	BOM_TABLE_ALTS	EEPROM_K	EEPROM,8KBIT,I2C

RULER_RULE_SET=MSAP_2017 — MANUFACTURING CONFIGURATION — TABLE_REV_NUMBER=6

DIELECTRIC BASED SPACING RULES						
MULTIPLES		SMDPIN MAX(UM)	MVIA MAX(UM)	SMDPIN2SMDPIN MAX(UM)	DEFAULT SPACING MULTIPLES	VOID SPACE RATIO
1	1.65,2,2D,3.2D,4D		120	120 100	2	

LAYERS	MINIMUM CU WIDTH RATIO	MINIMUM CU SPACING RATIO	MINIMUM TO DEFAULT RATIO
TOP,BOTTOM,ISL4,ISL5	1.0	1.0	1.0
ISL2,ISL3,ISL6,ISL7	1.0	1.0	1.0

POWER RULE DEFINITIONS

LOAD CURRENT(MA)	CURRENT DENSITY(A/SQMM)	MIN NECK WIDTH(MM)	MAX NECK LENGTH(MM)
50	50	0.08	10
100	50	0.08	10
200	50	0.08	10
300	50	0.08	10
500	50	0.08	10
1000	50	0.08	10
3000	50	0.08	10

TABLE_IMPEDANCE_HYBRID=50_HYBRID

LAYERS	IMPEDANCE RULE
TOP	50_OHM_SE
ISL3	50_OHM_SE
ISL6	50_OHM_SE_6R4R8
ISL7	50_OHM_SE
ISL5	50_OHM_SE

TABLE_IMPEDANCE_HYBRID=50_HYBRID_WIDE

LAYERS	IMPEDANCE RULE
TOP	50_OHM_SE_1R3
ISL3	50_OHM_SE
ISL6	50_OHM_SE_6R4R8
ISL7	50_OHM_SE
ISL5	50_OHM_SE

HARDWARE MT Pro

PAGE TITLE: BOM TABLES

Apple Inc.

DRAWING NUMBER: 051-02695 — SIZE: D

REVISION: 4.0.0

BRANCH:

PAGE: 2 OF 27

SHEET: 17 OF 47

NOTICE OF PROPRIETARY PROPERTY:
THE INFORMATION CONTAINED HEREIN IS THE PROPRIETARY PROPERTY OF APPLE INC.
THE POSESSOR AGREES TO THE FOLLOWING:
I TO MAINTAIN THIS DOCUMENT IN CONFIDENCE
II NOT TO REPRODUCE OR COPY IT
III NOT TO REVEAL OR PUBLISH IT IN WHOLE OR PART
IV ALL RIGHTS RESERVED

RADIO ANTENNAS

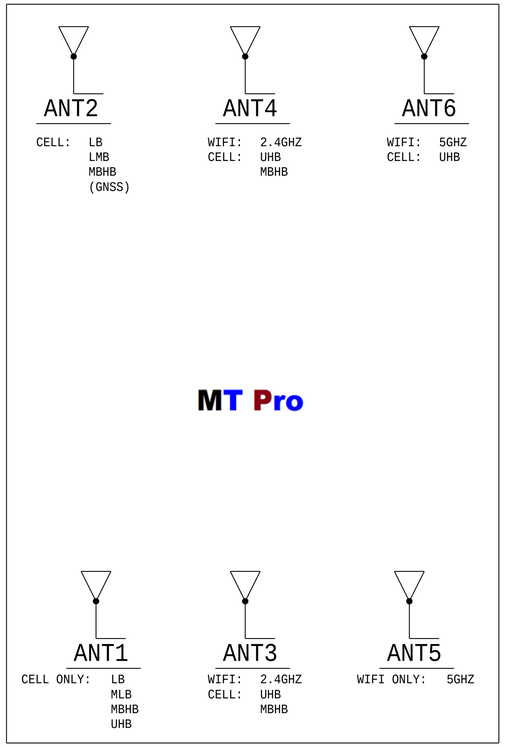

UAT

LAT

HARDWARE MT Pro

PAGE TITLE
ANTENNA DIAGRAM

Apple Inc.

DRAWING NUMBER 051-02695
SIZE D
REVISION 4.0.0
BRANCH
PAGE 3 OF 27
SHEET 18 OF 47

NOTICE OF PROPRIETARY PROPERTY:

THE INFORMATION CONTAINED HEREIN IS THE PROPRIETARY PROPERTY OF APPLE INC.
THE POSESSOR AGREES TO THE FOLLOWING:
I TO MAINTAIN THIS DOCUMENT IN CONFIDENCE
II NOT TO REPRODUCE OR COPY IT
III NOT TO REVEAL OR PUBLISH IT IN WHOLE OR PART
IV ALL RIGHTS RESERVED

ANTENNA B2BS

UAT

MT Pro

BB_TO_UAT_RFFE_CLK_R — MAKE_BASE=TRUE — BB_TO_UAT_RFFE_CLK_R
BB_TO_UAT_RFFE_DATA_R — MAKE_BASE=TRUE — BB_TO_UAT_RFFE_DATA_R

FL304_A
10-OHM-1.1A
PP1V8_S2 — 01005 — PP_TUNER_1V8_UAT
UAT_GPO

C304_A 0.47UF 20% 6.3V X5R 01005-1 UAT_GPO
C305_A 33PF 5% 16V NP0-C0G 01005-1 UAT_GPO

USID=0X8

UATGPO_A
QM18099
WLCSP

A3	VIO	LAT_GPO	GPO1	A4 UAT_GPO1
A1	SCLK		GPO2	B1 UAT_GPO2
A2	SDATA		GPO3	B4 UAT_GPO3
B2	USID1		GPO4	C1 UAT_GPO4
			GPO5	C2 UAT_GPO5
			GPO6	C4 UAT_GPO6
	GND		GPO7	C3 NC

B3

BB_TO_UAT_RFFE_CLK
C308_A 33PF 5% 16V NP0-C0G 01005-1 UAT_GPO
BB_TO_UAT_RFFE_DATA
C311_A 33PF 5% 16V NP0-C0G 01005-1 UAT_GPO

FL311_A
FERR-1500OHM-25%-200MA
PP3V0_S2 — 01005 — PP3V0_APPMU_S2_TO_UAT
C314_A 220PF 5% 16V C0G 01005

FL312_A
FERR-1500OHM-25%-200MA
PP1V8_S2 — 01005 — PP1V8_APPMU_S2_TO_UAT
C315_A 220PF 5% 16V C0G 01005

UAT B2BS

RCPT ON MLB_BOT (518S00167)
PLUG ON FLEX (518S00166)

J_UAT1
MM3531-2700A14
F-ST-SM

BB_TO_UAT_RFFE_CLK_R	1	8	
BB_TO_UAT_RFFE_DATA_R	2	9	
PP1V8_APPMU_S2_TO_UAT	3	10	50_LB_GNSS_LMB_MBHB_ANT2
UAT_GPO2_B2B	4	11	
UAT_GPO1_B2B	5	12	PP3V0_APPMU_S2_TO_UAT
UAT_GPO4_B2B	6	13	
UAT_GPO3_B2B	7	14	50_UHB_5GHZ_ANT6
	15	21	
	16	22	
	17	23	
	18	24	
	19	25	
	20	26	

RCPT ON MLB_BOT (516S00434)
PLUG ON FLEX (516S00435)

J_UAT2
MLF06
F-ST-SM

	16		
	12	8	
	13	9	
50_2G4_UHB_MBHB_ANT4	4	1	UAT_GPO5_B2B
	5	2	PP3V0_APPMU_S2_TO_UAT
	6	3	UAT_GPO6_B2B
		7	
	14	10	
	15	11	
		17	

GPO FILTERS

FL300_A FERR-1500OHM-25%-200MA UAT_GPO1 — 01005 — UAT_GPO1_B2B
C300_A 56PF 5% 25V NP0-C0G-CERM 01005

FL301_A FERR-1500OHM-25%-200MA LAT_GPO1 — 01005 — LAT_GPO1_B2B
C301_A 56PF 5% 25V NP0-C0G-CERM 01005

FL302_A FERR-1500OHM-25%-200MA UAT_GPO2 — 01005 — UAT_GPO2_B2B
C303_A 56PF 5% 25V NP0-C0G-CERM 01005

FL303_A FERR-1500OHM-25%-200MA LAT_GPO2 — 01005 — LAT_GPO2_B2B
C302_A 56PF 5% 25V NP0-C0G-CERM 01005

FL400_A FERR-1500OHM-25%-200MA UAT_GPO3 — 01005 — UAT_GPO3_B2B
C400_A 56PF 5% 25V NP0-C0G-CERM 01005

FL306_A FERR-1500OHM-25%-200MA LAT_GPO3 — 01005 — LAT_GPO3_B2B
C307_A 56PF 5% 25V NP0-C0G-CERM 01005

FL401_A FERR-1500OHM-25%-200MA UAT_GPO4 — 01005 — UAT_GPO4_B2B
C401_A 56PF 5% 25V NP0-C0G-CERM 01005

FL308_A FERR-1500OHM-25%-200MA LAT_GPO4 — 01005 — LAT_GPO4_B2B
C309_A 56PF 5% 25V NP0-C0G-CERM 01005

FL309_A FERR-1500OHM-25%-200MA UAT_GPO5 — 01005 — UAT_GPO5_B2B
C312_A 56PF 5% 25V NP0-C0G-CERM 01005

FL310_A FERR-1500OHM-25%-200MA LAT_GPO5 — 01005 — LAT_GPO5_B2B
C313_A 56PF 5% 25V NP0-C0G-CERM 01005

FL313_A FERR-1500OHM-25%-200MA UAT_GPO6 — 01005 — UAT_GPO6_B2B
C316_A 56PF 5% 25V NP0-C0G-CERM 01005

FL314_A FERR-1500OHM-25%-200MA LAT_GPO6 — 01005 — LAT_GPO6_B2B
C317_A 56PF 5% 25V NP0-C0G-CERM 01005

LAT

BB_TO_LAT_RFFE_CLK_R — MAKE_BASE=TRUE — BB_TO_LAT_RFFE_CLK_R
BB_TO_LAT_RFFE_DATA_R — MAKE_BASE=TRUE — BB_TO_LAT_RFFE_DATA_R

FL315_A
10-OHM-1.1A
PP1V8_S2 — 01005 — PP_TUNER_1V8_LAT
LAT_GPO

C318_A 0.47UF 20% 6.3V X5R 01005-1 LAT_GPO
C319_A 33PF 5% 16V NP0-C0G 01005-1 LAT_GPO

USID=0X8

LATGPO_A
QM18099
WLCSP

A3	VIO	LAT_GPO	GPO1	A4 LAT_GPO1
A1	SCLK		GPO2	B1 LAT_GPO2
A2	SDATA		GPO3	B4 LAT_GPO3
B2	USID1		GPO4	C1 LAT_GPO4
			GPO5	C2 LAT_GPO5
			GPO6	C4 LAT_GPO6
	GND		GPO7	C3 NC

B3

BB_TO_LAT_RFFE_CLK
C324_A 33PF 5% 16V NP0-C0G 01005-1 LAT_GPO
BB_TO_LAT_RFFE_DATA
C325_A 33PF 5% 16V NP0-C0G 01005-1 LAT_GPO

FL317_A
FERR-1500OHM-25%-200MA
PP3V0_S2 — VOLTAGE=3.0 — 01005 — PP3V0_APPMU_S2_TO_LAT
C327_A 220PF 5% 16V C0G 01005

FL316_A
FERR-1500OHM-25%-200MA
PP1V8_S2 — 01005 — PP1V8_APPMU_S2_TO_LAT
C326_A 220PF 5% 16V C0G 01005

LAT B2B

RCPT ON MLB_BOT (518S00149)
PLUG ON FLEX (518S00150)

MT Pro

JLAT_A
MM3531-2700A20
F-ST-SM

LAT_GPO6_B2B	1	11	
LAT_GPO1_B2B	2	12	
LAT_GPO2_B2B	3	13	LAT_GPO4_B2B
LAT_GPO3_B2B	4	14	LAT_GPO5_B2B
	5	15	
	6	16	50_LB_MLB_MB_HB_UHB_ANT1
PP1V8_APPMU_S2_TO_LAT	7	17	
BB_TO_LAT_RFFE_DATA_R	8	18	50_WLAN_5GHZ_ANT5
BB_TO_LAT_RFFE_CLK_R	9	19	
PP3V0_APPMU_S2_TO_LAT	10	20	50_2G4_UHB_MBHB_ANT3
	SHLD		
	21	27	
	22	28	
	23	29	
	24	30	
	25	31	
	26	32	

RFFE FILTERS

BB_TO_UAT_RFFE_CLK_R — C320_A 33PF 5% 16V NP0-C0G 01005-1 NOSTUFF
BB_TO_LAT_RFFE_CLK_R — C321_A 33PF 5% 16V NP0-C0G 01005-1 NOSTUFF
BB_TO_UAT_RFFE_DATA_R — C322_A 33PF 5% 16V NP0-C0G 01005-1 NOSTUFF
BB_TO_LAT_RFFE_DATA_R — C323_A 33PF 5% 16V NP0-C0G 01005-1 NOSTUFF

Mobile1Tech.com

ANTENNA CONNECTIONS

50_LB_MLB_MB_HB_UHB_ANT1 — MAKE_BASE=TRUE — 50_LB_MLB_MB_HB_UHB_ANT1
50_LB_GNSS_LMB_MBHB_ANT2 — MAKE_BASE=TRUE — 50_LB_GNSS_LMB_MBHB_ANT2
50_2G4_UHB_MBHB_ANT3 — MAKE_BASE=TRUE — 50_2G4_UHB_MBHB_ANT3
50_2G4_UHB_MBHB_ANT4 — MAKE_BASE=TRUE — 50_2G4_UHB_MBHB_ANT4
50_WLAN_5GHZ_ANT5 — MAKE_BASE=TRUE — 50_WLAN_5GHZ_ANT5
50_UHB_5GHZ_ANT6 — MAKE_BASE=TRUE — 50_UHB_5GHZ_ANT6

PAGE TITLE: ANTENNA: B2BS

Apple Inc.

DRAWING NUMBER: 051-02695
SIZE: D
REVISION: 4.0.0
BRANCH:
PAGE: 4 OF 27
SHEET: 19 OF 47

NOTICE OF PROPRIETARY PROPERTY:
THE INFORMATION CONTAINED HEREIN IS THE PROPRIETARY PROPERTY OF APPLE INC.
THE POSESSOR AGREES TO THE FOLLOWING:
I TO MAINTAIN THIS DOCUMENT IN CONFIDENCE
II NOT TO REPRODUCE OR COPY IT
III NOT TO REVEAL OR PUBLISH IT IN WHOLE OR PART
IV ALL RIGHTS RESERVED

SHARED N-PLEXERS

MT Pro

UAT

ANT4

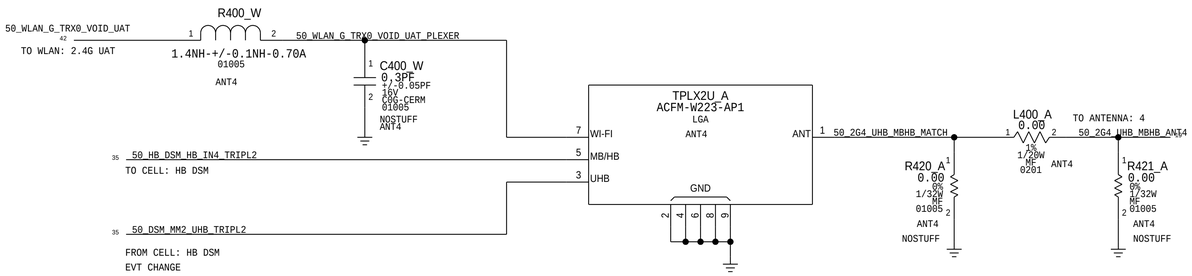

MHB-UHB/2.4G WLAN TRIPLEXER2

ANT6

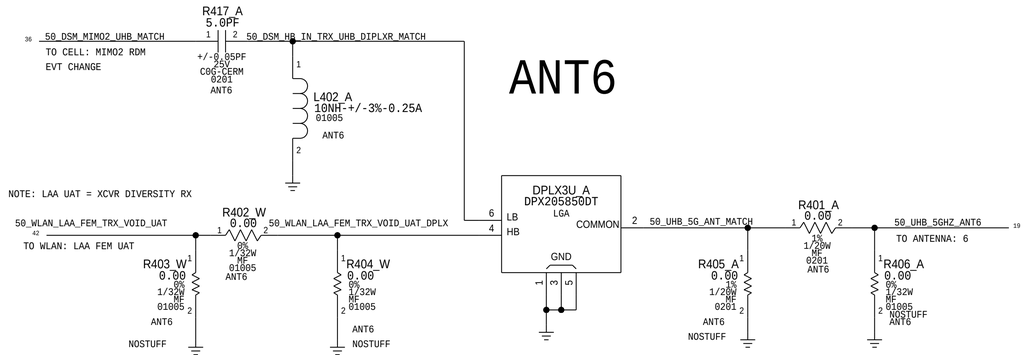

UHB-5G WLAN DIPLEXER3

MT Pro

LAT

ANT3

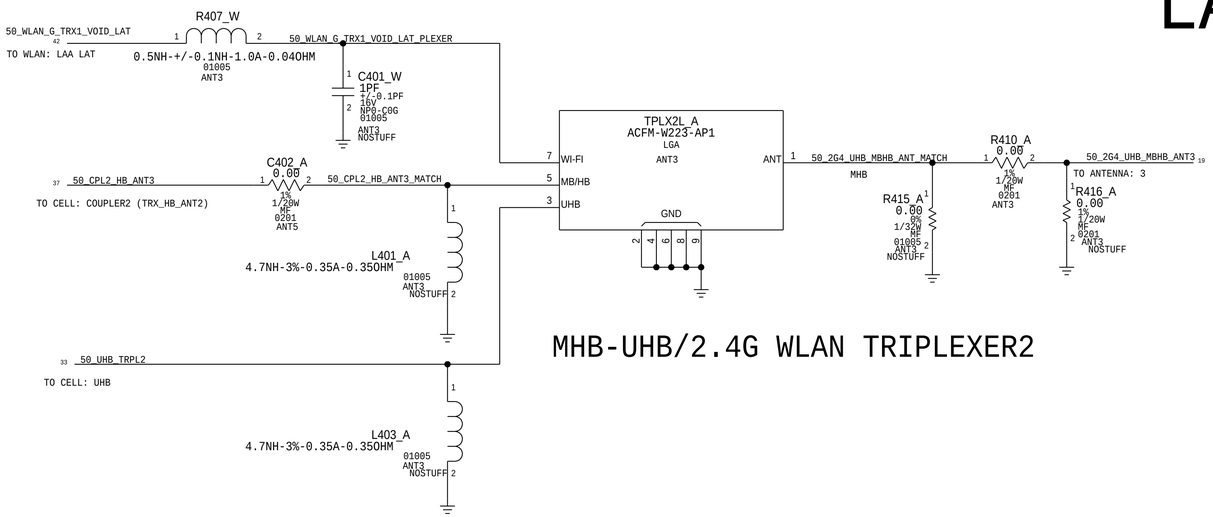

MHB-UHB/2.4G WLAN TRIPLEXER2

ANT5

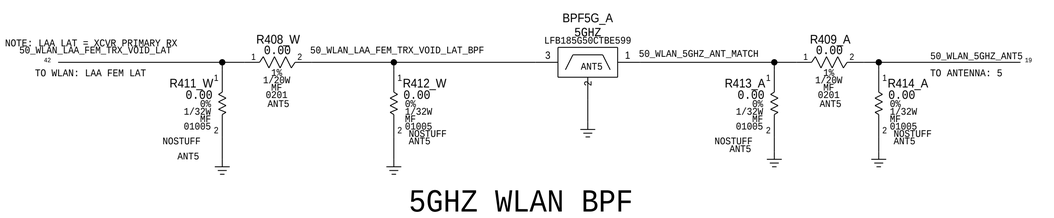

5GHZ WLAN BPF

Mobile1Tech.com

PAGE TITLE	ANTENNA: N-PLEX SHARED
Apple Inc.	DRAWING NUMBER 051-02695 · SIZE D
	REVISION 4.0.0
	BRANCH
	PAGE 5 OF 27
	SHEET 20 OF 47

NOTICE OF PROPRIETARY PROPERTY:

THE INFORMATION CONTAINED HEREIN IS THE PROPRIETARY PROPERTY OF APPLE INC.
THE POSESSOR AGREES TO THE FOLLOWING:
I TO MAINTAIN THIS DOCUMENT IN CONFIDENCE
II NOT TO REPRODUCE OR COPY IT
III NOT TO REVEAL OR PUBLISH IT IN WHOLE OR PART
IV ALL RIGHTS RESERVED

BBPMU: CONTROL

BBPMU (8/14)

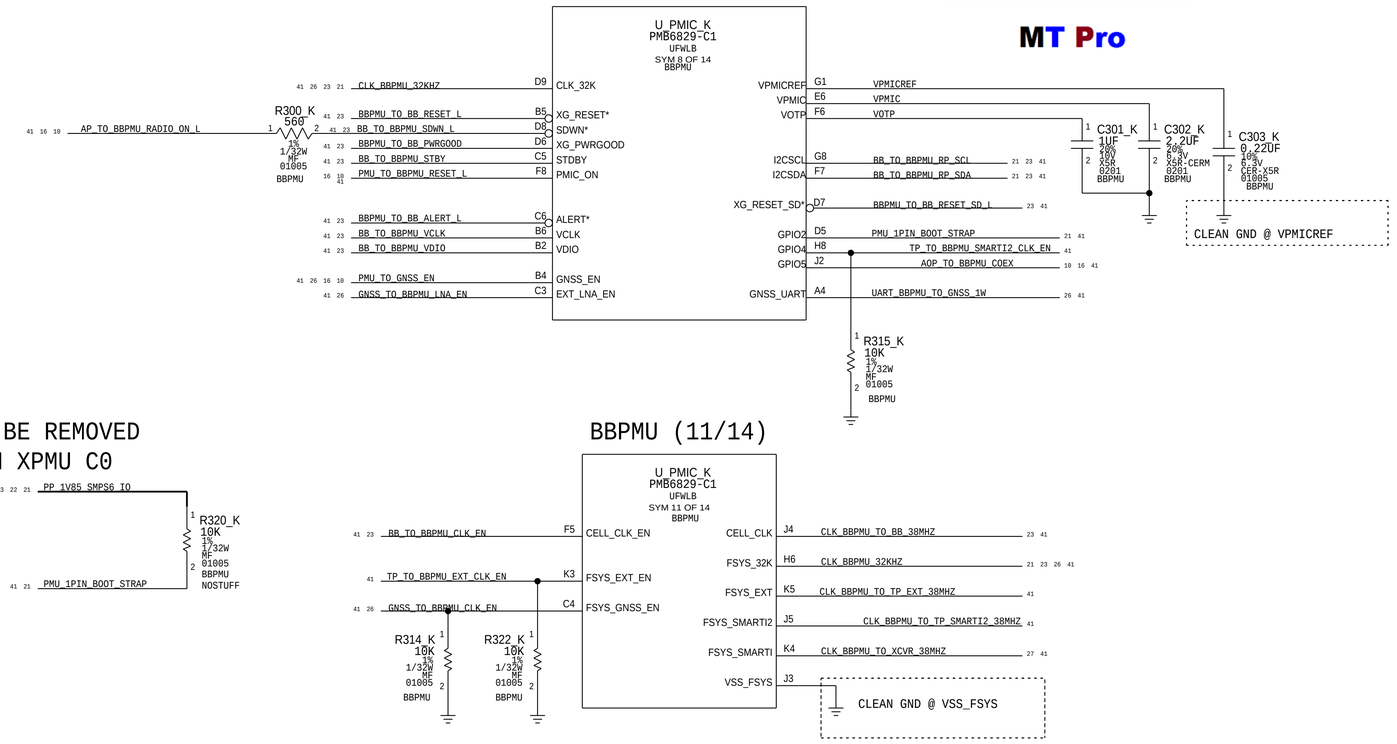

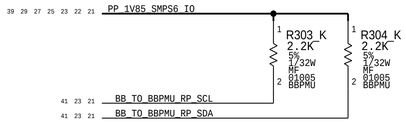

MT Pro

BBPMU (14/14)

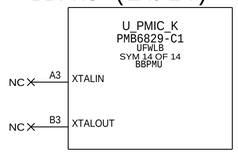

POR: 32K CLK GENERATED INTERNALLY
OPTIONAL PINS FOR EXTERNAL OSC

BBPMU (12/14)

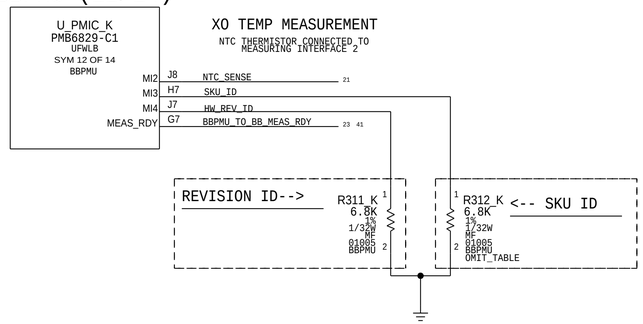

CAN BE REMOVED WITH XPMU C0

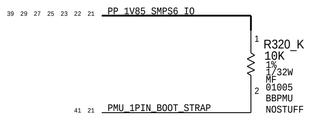

BBPMU (11/14)

REVISION

R311_K	REVISION MLB	REVISION RF DEV
0.0	T/POC/PRE-PROTO0	1.0
1.2K	P0	1.1
2.2K	P1	2.0
3.3K	P2	2.1
4.7K		3.0
6.8K	EVT	
8.2K	EVT 1.5	4.0
10K	CARRIER	
12K	DVT	5.0
15K	PVT	5.1
18K		
22K		
27K		6.0
33K		6.0
39K		
47K		
56K	DARWIN	
68K	JP_SKWS	
82K		
100K	P1 DOE2, TXC	
120K	P1 DOE1, S7 B1	
150K		

SKU/CATEGORY

R312_K	HW REVISION	X-CODE
0.0	RFDEV JP	
1.2K	ICE 18.0 JP	X1344 (ICE 18.0)
2.2K	ICE 18.0 ROW	
3.3K	ICE 18.1 JP	X1049 (ICE 18.1)
4.7K	ICE 18.1 ROW	
6.8K	ICE 18.2 JP	X1210 (ICE 18.2)
8.2K	ICE 18.2 ROW	
10K	RFDEV ROW	
12K	ICE 18.5 JP	X1170
15K	ICE 18.6 JP	X1176
18K		
22K	ICE 18.5 US	X1170
27K	ICE 18.6 US	X1176
33K	ICE 18.0 NA	X1344
39K	RFDEV NA	
47K	ICE 18.1 NA	X1049
56K	ICE 18.2 NA	X1210
68K		
82K	KAROO INTERNAL	
100K	KAROO INTERNAL	
120K	KAROO INTERNAL	
150K		

(RESISTANCE DECREASES AS TEMPERATURE INCREASES)

NTC TS-XO

NEGATIVE TEMPERATURE COEFFICIENT
THERMAL SENSING CRYSTAL OSCILLATOR

BBPMU (7/14)

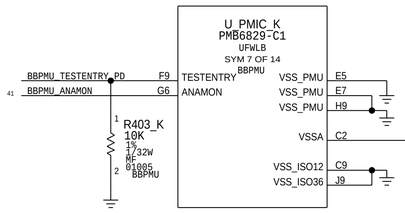

BBPMU (9/14)

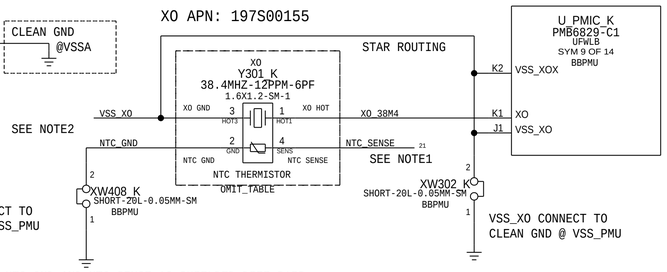

NOTE1: ROUTE NTC_GND AND NTC_SENSE AS SHIELDED DIFF PAIR
NOTE2: VSS_XO AND NTC_GND SHOULD CONNECT TOGETHER WITH LOW IMPEDANCE ON CLEAN GND

HWID TABLE RDAR://32880011
ADC TABLE RDAR://27081897

BBPMU ADC TABLES

Mobile1Tech.com

PAGE TITLE	BBPMU: CONTROL
	Apple Inc.
DRAWING NUMBER	051-02695
SIZE	D
REVISION	4.0.0
BRANCH	
PAGE	6 OF 27
SHEET	21 OF 47

NOTICE OF PROPRIETARY PROPERTY:
THE INFORMATION CONTAINED HEREIN IS THE PROPRIETARY PROPERTY OF APPLE INC.
THE POSESSOR AGREES TO THE FOLLOWING:
I TO MAINTAIN THIS DOCUMENT IN CONFIDENCE
II NOT TO REPRODUCE OR COPY IT
III NOT TO REVEAL OR PUBLISH IT IN WHOLE OR PART
IV ALL RIGHTS RESERVED

BBPMU: RAILS

PROGRAMMABLE LDOS

MT Pro

BBPMU (10/14)

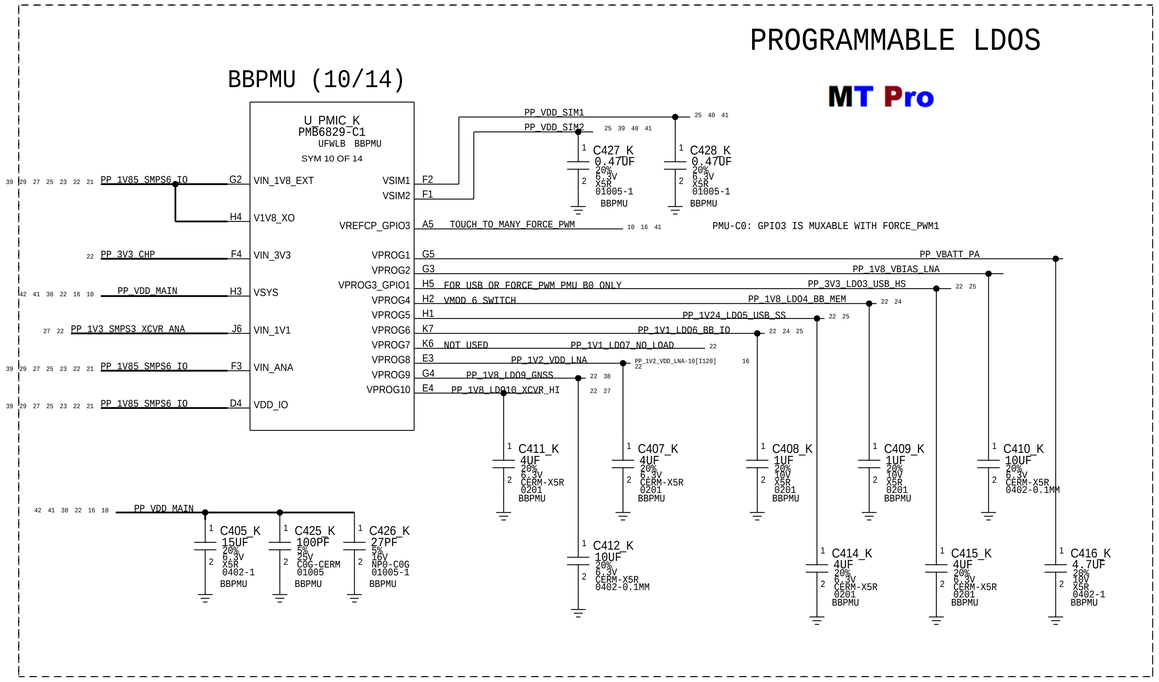

CHARGE PUMP

MT Pro

BBPMU (6/14)

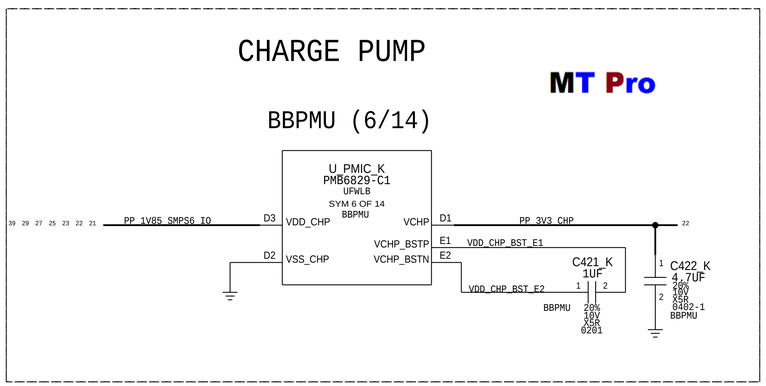

PP400_K P2MM-NSM OMIT_SM PP — PP_VBATT_PA — PP_VBATT_PA-10[I120] — 16 22 33 37

PP401_K P2MM-NSM OMIT_SM PP — PP_1V8_VBIAS_LNA — PP_1V8_VBIAS_LNA-10[I120] — 16 22 33 34 35 36

PP2480_K P2MM-NSM OMIT_SM PP — PP_3V3_LDO3_USB_HS — 22 25

PP2481_K P2MM-NSM OMIT_SM PP — PP_1V8_LDO4_BB_MEM — 22 24

PP2482_K P2MM-NSM OMIT_SM PP — PP_1V24_LDO5_USB_SS — 22 25

PP2490_K P2MM-NSM OMIT_SM PP — PP_1V1_LDO6_BB_IO — 22 24 25

PP403_K P2MM-NSM OMIT_SM PP — PP_1V1_LDO7_NO_LOAD — 22

PP404_K P2MM-NSM OMIT_SM PP — PP_1V2_VDD_LNA — PP_1V2_VDD_LNA-10[I120] — 16 22

PP405_K P2MM-NSM OMIT_SM PP — PP_1V8_LDO9_GNSS — 22 38

PP406_K P2MM-NSM OMIT_SM PP — PP_1V8_LDO10_XCVR_HI — 22 27

SWITCHERS

BBPMU (1/14)

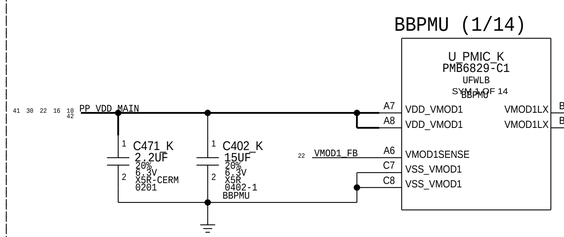

APN:152S00539
Z=0.8MM

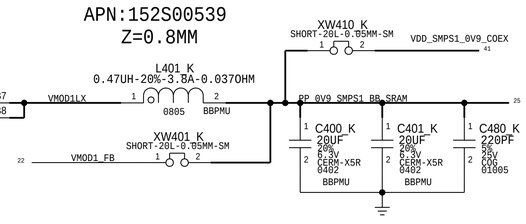

BBPMU (2/14)

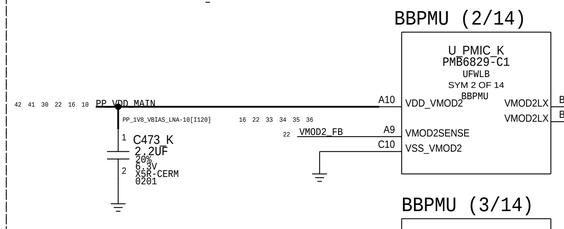

APN:152S00436
Z=0.8MM

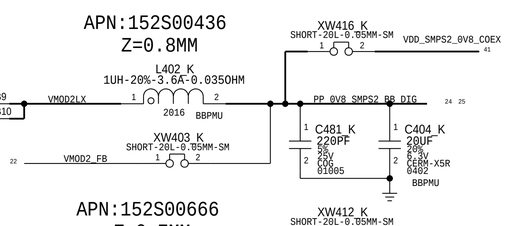

BBPMU (3/14)

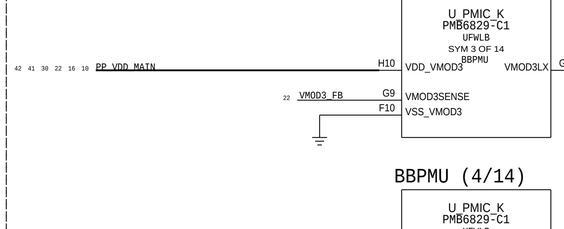

APN:152S00666
Z=0.7MM

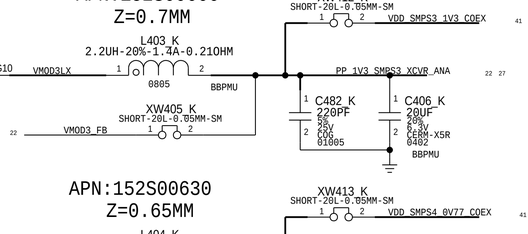

BBPMU (4/14)

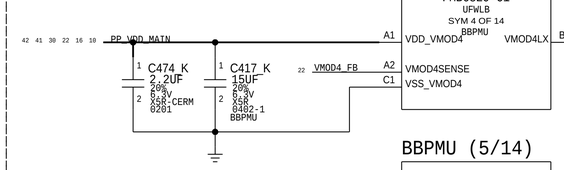

APN:152S00630
Z=0.65MM

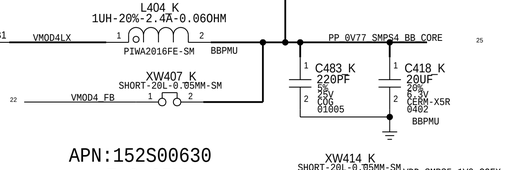

BBPMU (5/14)

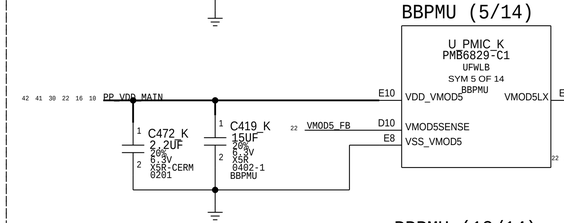

APN:152S00630
Z=0.65MM

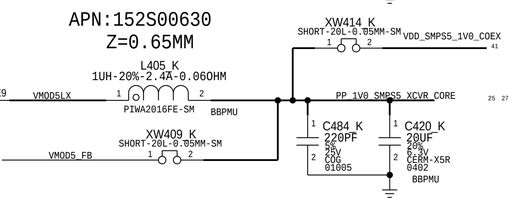

BBPMU (13/14)

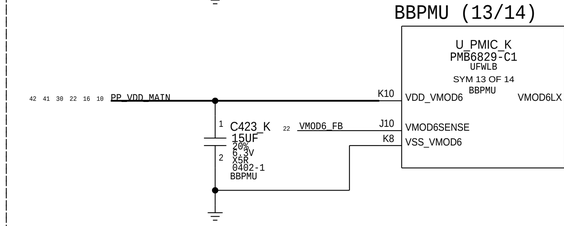

APN:152S00630
Z=0.65MM

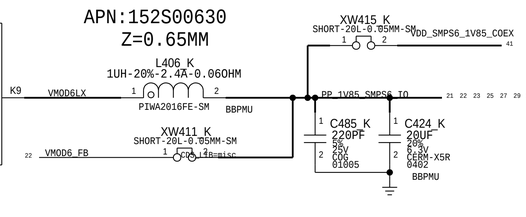

PAGE TITLE	BBPMU: RAILS
	Apple Inc.
DRAWING NUMBER	051-02695
SIZE	D
REVISION	4.0.0
BRANCH	
PAGE	7 OF 27
SHEET	22 OF 47

NOTICE OF PROPRIETARY PROPERTY:

THE INFORMATION CONTAINED HEREIN IS THE PROPRIETARY PROPERTY OF APPLE INC. THE POSESSOR AGREES TO THE FOLLOWING:

I TO MAINTAIN THIS DOCUMENT IN CONFIDENCE

II NOT TO REPRODUCE OR COPY IT

III NOT TO REVEAL OR PUBLISH IT IN WHOLE OR PART

IV ALL RIGHTS RESERVED

BB: INTERFACE

XG756 (5/7)

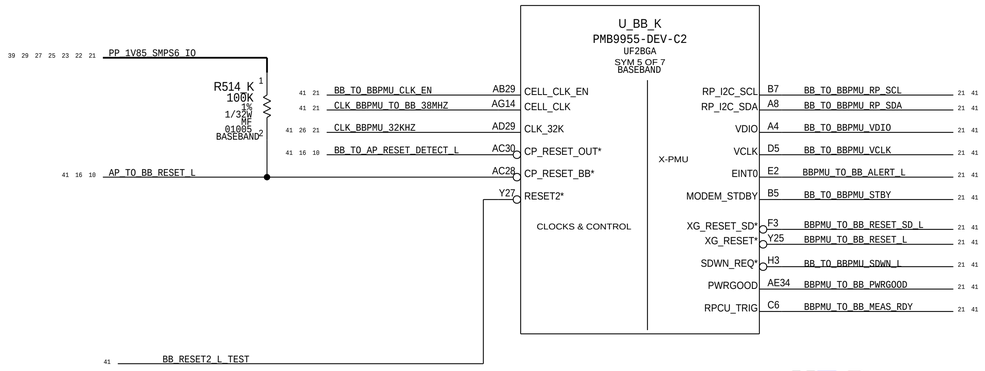

XG756 (1/7)

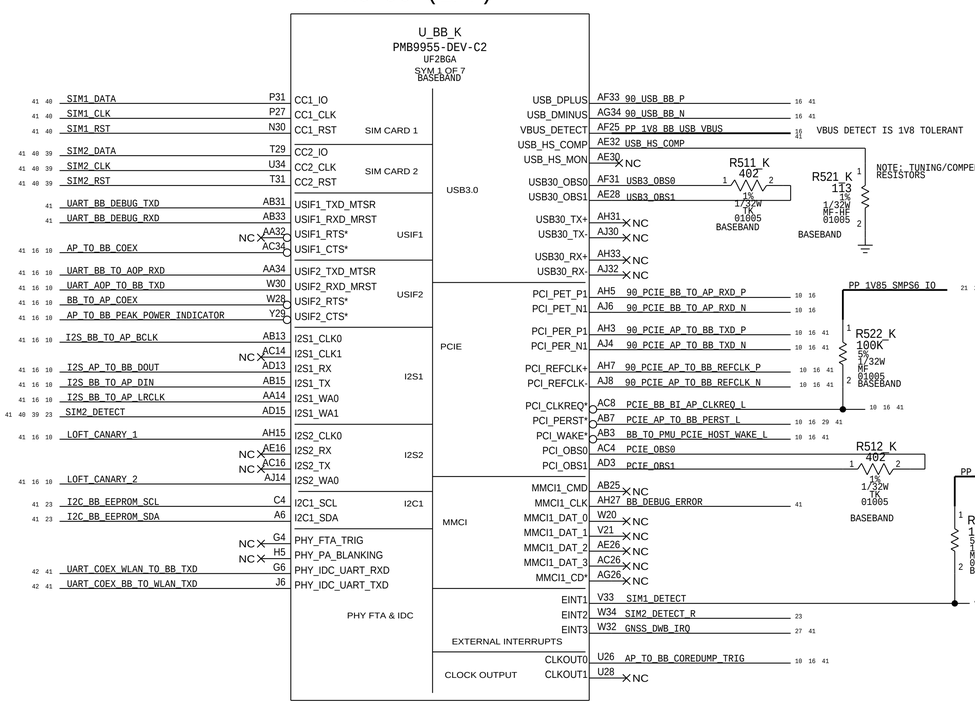

XG756 (7/7)

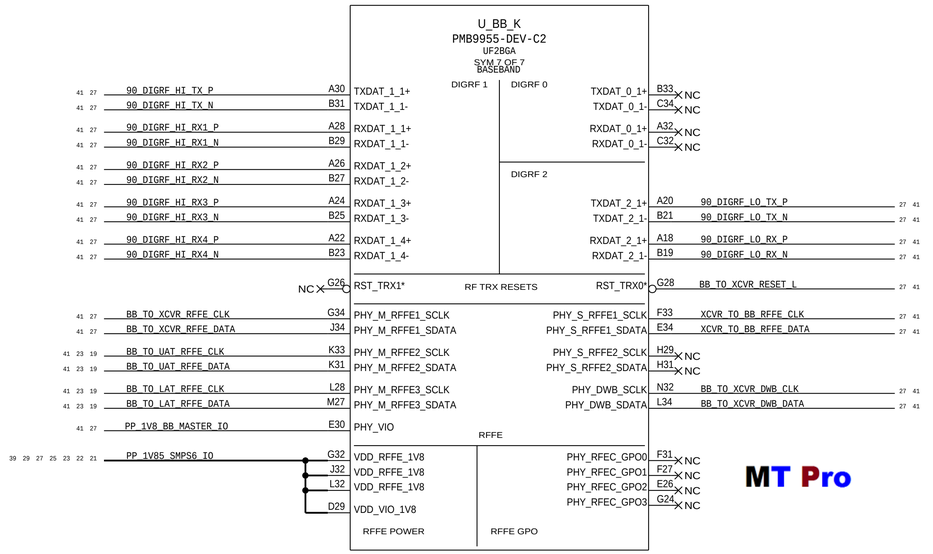

BB RFFE SOURCE TERMINATIONS

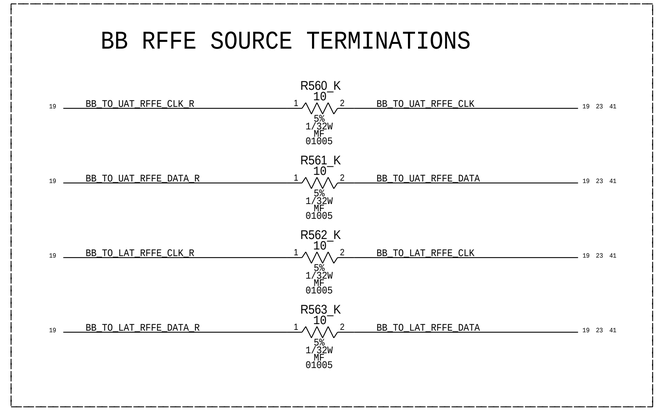

SIM2_DETECT TO EINT2

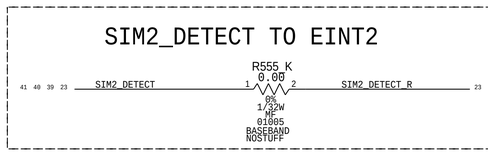

BB EEPROM

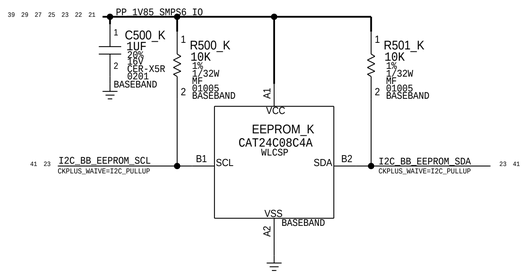

MT Pro

PAGE TITLE	BB: INTERFACE
Apple Inc.	DRAWING NUMBER 051-02695 · SIZE D
	REVISION 4.0.0
	BRANCH
	PAGE 8 OF 27
	SHEET 23 OF 47

NOTICE OF PROPRIETARY PROPERTY:

THE INFORMATION CONTAINED HEREIN IS THE PROPRIETARY PROPERTY OF APPLE INC. THE POSESSOR AGREES TO THE FOLLOWING:

I TO MAINTAIN THIS DOCUMENT IN CONFIDENCE

II NOT TO REPRODUCE OR COPY IT

III NOT TO REVEAL OR PUBLISH IT IN WHOLE OR PART

IV ALL RIGHTS RESERVED

BB: DDR PWR & JTAG

MT Pro

HOOKS FOR DDR4 TESTING/CAL

XG756 (2/7)

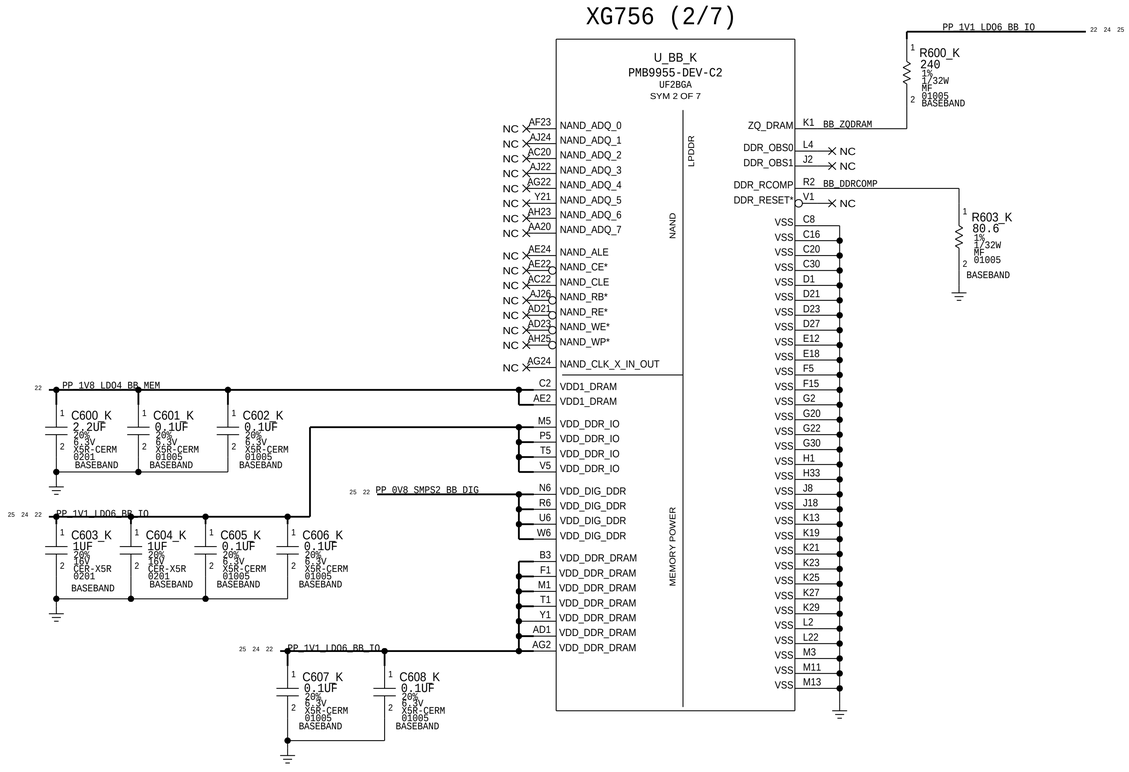

XG756 (6/7)

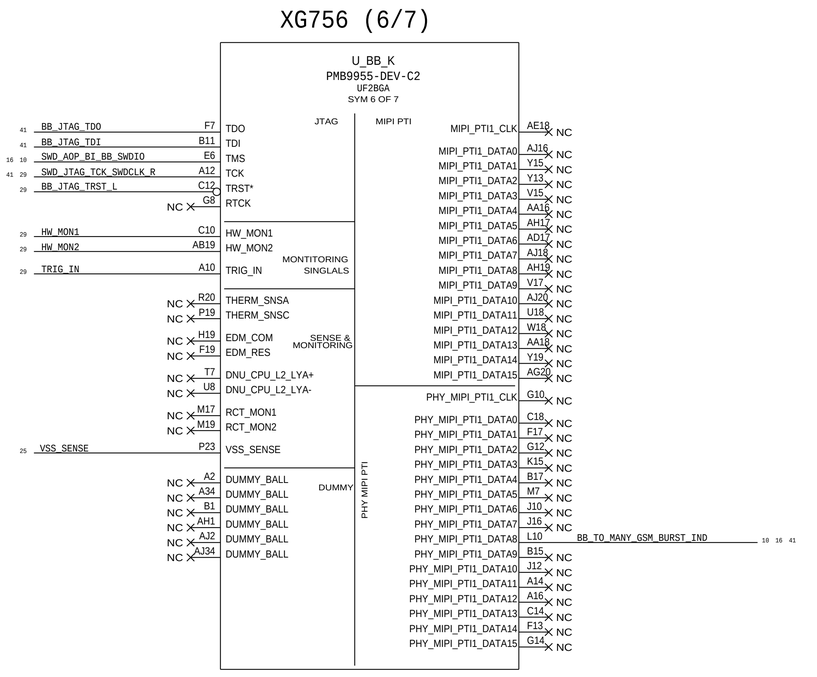

HARDWARE MT Pro

PAGE TITLE	BB: DDR PWR & JTAG
Apple Inc.	DRAWING NUMBER 051-02695 · SIZE D
	REVISION 4.0.0
	BRANCH
	PAGE 9 OF 27
	SHEET 24 OF 47

NOTICE OF PROPRIETARY PROPERTY:
THE INFORMATION CONTAINED HEREIN IS THE PROPRIETARY PROPERTY OF APPLE INC.
THE POSESSOR AGREES TO THE FOLLOWING:
I TO MAINTAIN THIS DOCUMENT IN CONFIDENCE
II NOT TO REPRODUCE OR COPY IT
III NOT TO REVEAL OR PUBLISH IT IN WHOLE OR PART
IV ALL RIGHTS RESERVED

BB: DIGITAL PWR

MT Pro

XG756 (3/7)

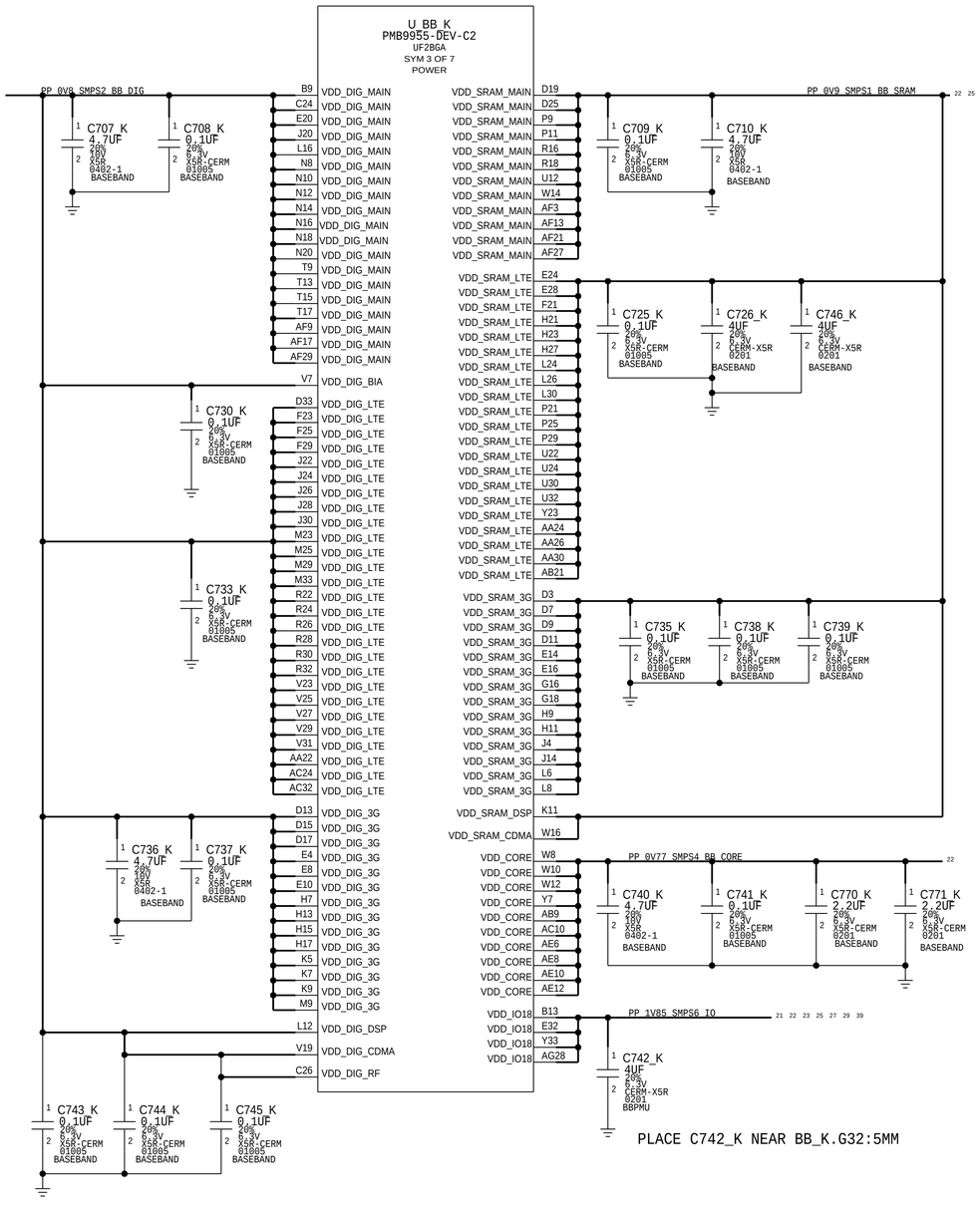

XG756 (4/7)

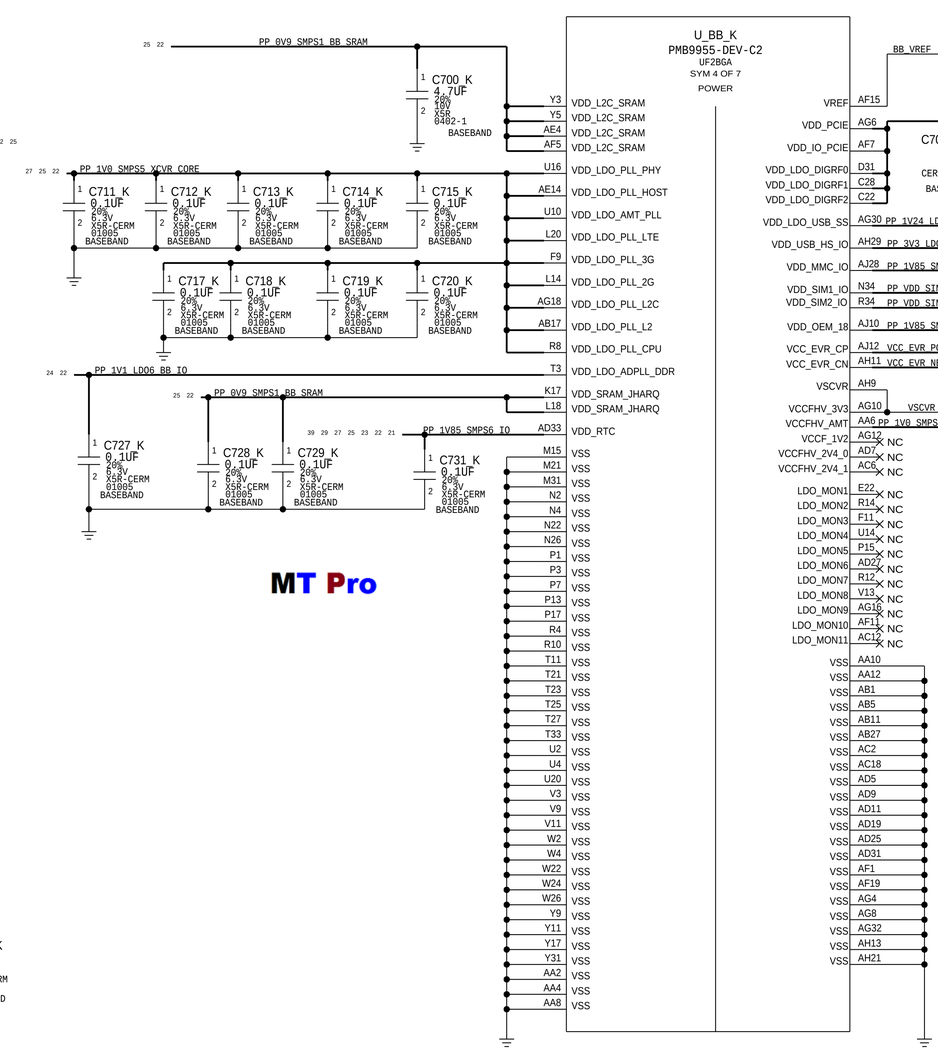

MT Pro

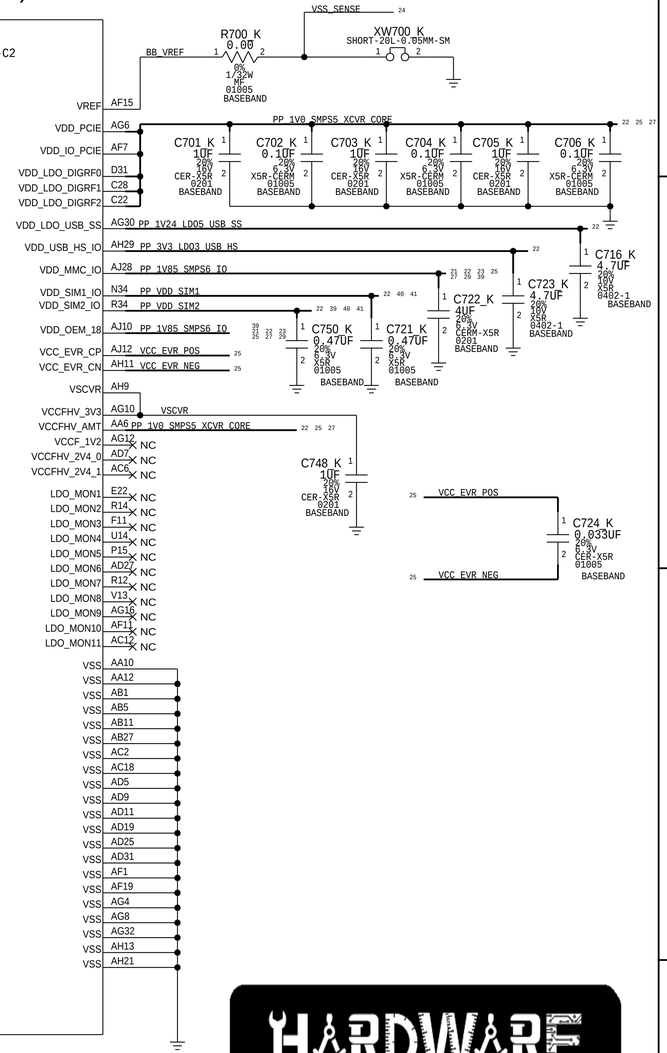

HARDWARE MT Pro

PAGE TITLE	BB: DIGITAL PWR
Apple Inc.	DRAWING NUMBER 051-02695 · SIZE D
	REVISION 4.0.0
	BRANCH
	PAGE 10 OF 27
	SHEET 25 OF 47

NOTICE OF PROPRIETARY PROPERTY:
THE INFORMATION CONTAINED HEREIN IS THE PROPRIETARY PROPERTY OF APPLE INC.
THE POSESSOR AGREES TO THE FOLLOWING:
I TO MAINTAIN THIS DOCUMENT IN CONFIDENCE
II NOT TO REPRODUCE OR COPY IT
III NOT TO REVEAL OR PUBLISH IT IN WHOLE OR PART
IV ALL RIGHTS RESERVED

XCVR: TRANSMIT & GNSS

MT Pro

SMARTI7 (4/7)

U_XCVR_K
PMB5762-A2
UFWLB
SYM 4 OF 7
XCVR

PADACF+	L4	50_ET_DAC_P	30 41	
PADACF-	M3	50_ET_DAC_N	30 41	
RAMPDAC	K3	NC		
TX_LB1	T1	50_XCVR_TX_LB1		
TX_LB2	U2	50_XCVR_TX_LB2	33	824 - 915 2G TX OUTPUT
TX_MB1	R2	50_XCVR_TX_MB1		
TX_MB2	Y1	50_XCVR_TX_MB2		
TX_MB3	AA2	50_TX_MB3_MLB_2G	33	1400 - 1600
TX_MB4	P1	NC		
TX_HB	AB1	50_XCVR_TX_HB		
TX_UB	AC2	50_XCVR_TX_UB	33	3400 - 3600

MT Pro

R1305_K 0.00 1/32W MF 01005 RADIO_LB_PAD
50_TX_LB_PA_IN 699 - 915 MHZ 10 16

C1309_K 47PF 5% 16V NP0-C0G 01005 NOSTUFF RADIO_LB_PAD

C1410_K 27PF 5% 16V NP0-C0G 01005-1 RADIO_HB_PAD
50_TX_MB1_IN 1710 - 1995 MHZ 10 16
L1400_K 10NH-+/-3%-0.25A 01005 RADIO_HB_PAD NOSTUFF

C1411_K 27PF 5% 16V NP0-C0G 01005-1 RADIO_HB_PAD
50_TX_2G_HB_IN 1710 - 1995 MHZ 10 16
L1415_K 10NH-+/-3%-0.25A 01005 RADIO_HB_PAD NOSTUFF

C1412_K 27PF 5% 16V NP0-C0G 01005-1 RADIO_HB_PAD
50_TX_HB_PA_IN 2300 - 2690 MHZ 10 16
L1401_RF 10NH-+/-3%-0.25A 01005 RADIO_HB_PAD NOSTUFF

SMARTI7 (3/7)

FLTGPS_K
SAW-GPS
SAFRQ1G56XB0F57
LGA

39 50_GNSS_SAW → 4 INPUT | OUTPUT 2 → GNSS_RF_IN_MATCH
GND 1 | GND 3

L801_K 3.6NH+/-0.1NH-180MA 01005
GNSS_RF_IN_MATCH 1 2 GNSS_MATCH

C800_K 20PF 5% 16V C0G 01005
GNSS_MATCH 1 2 50_GNSS_RF_IN_UNMATCH

C801_K 0.7PF +/-0.05PF 16V NP0-C0G 01005
GNSS_MATCH 1 2

U_XCVR_K
PMB5762-A2
UFWLB
SYM 3 OF 7
XCVR

41 23 21 CLK_BBPMU_32KHZ	H1	GN_LPO_CLK		
	H11	JTAG_MODE		
41 21 UART_BBPMU_TO_GNSS_1W	F5	GN_NTC		
41 21 16 10 PMU_TO_GNSS_EN	L6	GN_EN		
50_GNSS_RF_IN_UNMATCH	B1	GN_RF_IN		
	C2	GN_NTCMI-		
	D3	GN_NTCMI+		
AP_TO_GNSS_TIME_MARK	F3	GN_PPS_IN		
UART_GNSS_TO_AP_RTS_L_R	F7	GN_UART_RTS	26	
UART_AP_TO_GNSS_TXD	H7	GN_UART_RX	10 16 41	
UART_GNSS_TO_AP_TXD_R	H3	GN_UART_TX	26	
GNSS_TO_BBPMU_LNA_EN	G2	GN_LNA_EN	21 41	
GNSS_TO_AP_LOW_PWR_IND_R	G4	GN_UART_WAKE	26	
GNSS_TO_BBPMU_CLK_EN	H5	GN_FSYS_REQ	21 41	

R825_K 100K 5% 1/32W MF 01005
GN_PPS_IN → 1 | 2 → 10 16 41

GNSS DAMPING RESISTORS

R820_K 49.9 1% 1/32W MF 01005
26 UART_GNSS_TO_AP_RTS_L_R → 1 | 2 → UART_GNSS_TO_AP_CTS_L 10 16 41

R821_K 49.9 1% 1/32W MF 01005
26 UART_GNSS_TO_AP_TXD_R → 1 | 2 → UART_GNSS_TO_AP_RXD 10 16 41

R822_K 49.9 1% 1/32W MF 01005
26 GNSS_TO_AP_LOW_PWR_IND_R → 1 | 2 → GNSS_TO_AP_LOW_PWR_IND 10 16 41

HARDWARE MT Pro

PAGE TITLE	XCVR: TX & GNSS
Apple Inc.	DRAWING NUMBER 051-02695 · SIZE D
	REVISION 4.0.0
	BRANCH
	PAGE 11 OF 27
	SHEET 26 OF 47

NOTICE OF PROPRIETARY PROPERTY:
THE INFORMATION CONTAINED HEREIN IS THE PROPRIETARY PROPERTY OF APPLE INC.
THE POSESSOR AGREES TO THE FOLLOWING:
I TO MAINTAIN THIS DOCUMENT IN CONFIDENCE
II NOT TO REPRODUCE OR COPY IT
III NOT TO REVEAL OR PUBLISH IT IN WHOLE OR PART
IV ALL RIGHTS RESERVED

XCVR: INTERFACE & PWR

MT Pro

(LAYOUT: MAX DCR 85MOHM)
PP_1V0_SMPS5_XCVR_CORE
(LAYOUT: STAR ROUTE)
PP_1V3_SMPS3_XCVR_ANA
C906_K 15UF 20% 6.3V X5R-CERM 0402-0.1MM XCVR
C907_K 0.1UF 20% 6.3V X5R-CERM 01005 XCVR
FL900_K 2400HM-25%-0.2A-0.90HM 01005 XCVR
XW910_K SHORT-10L-0.1MM-SM OMIT XCVR1
C900_K 0.47UF 20% 6.3V X5R 01005-1 XCVR
C901_K 0.1UF 20% 6.3V X5R-CERM 01005 XCVR
C905_K 0.1UF 20% 6.3V X5R-CERM 01005 XCVR
CAP IMPROVES TX GAMMA SPURS (XCVR BALL N6)
PP_1V3_XCVR_TXPLL
C921_K 6800PF 10% 6.3V X5R 01005 XCVR
XW901_K SHORT-10L-0.1MM-SM OMIT XCVR
XW909_K SHORT-10L-0.1MM-SM OMIT XCVR
PP_1V3_SMPS3_XCVR_ANA
STAR ROUTE
C908_K 0.1UF 20% 6.3V X5R-CERM 01005
C909_K 0.1UF 20% 6.3V X5R 01005 NOSTUFF XCVR
C912_K 0.1UF 20% 6.3V X5R 01005 NOSTUFF XCVR
C913_K 0.1UF 20% 6.3V X5R-CERM 01005
XW902_K SHORT-10L-0.1MM-SM OMIT XCVR
XW903_K SHORT-10L-0.1MM-SM OMIT XCVR
XW905_K SHORT-10L-0.1MM-SM OMIT XCVR
XW906_K SHORT-10L-0.1MM-SM OMIT XCVR
XW907_K SHORT-10L-0.1MM-SM OMIT XCVR
PP_1V3_XCVR_RC_ADC
C916_K 0.1UF 20% 6.3V X5R 01005 XCVR NOSTUFF
PP_1V3_XCVR_RC_GM
REMOVED C920_K (HIGHLY PROBABLE)
REMOVED C914_K (HIGHLY PROBABLE)
PP_1V3_XCVR_RC_LO

SMARTI7 (1/7)

U_XCVR_K
PMB5762-A2
UFWLB
SYM 1 OF 7
XCVR

AC8 VDD1V0_DIG
F1 VDD1V1_GN
E2 VDD1V3_GN
AA18 VDD1V3_RX1PLL
C18 VDD1V3_RX2PLL
H19 VDD1V3_RX3PLL
P17 VDD1V3_RX4PLL
N6 VDD1V3_TXPLL
AB17 VDD1V3_RX1DCO
B17 VDD1V3_RX2DCO
G18 VDD1V3_RX3DCO
N18 VDD1V3_RX4DCO
AB21 VDD1V3_RC_LO1
A20 VDD1V3_RC_LO2
F21 VDD1V3_RC_LO2
K21 VDD1V3_RC_LO1
Y17 VDD1V3_RC_ADC1
D17 VDD1V3_RC_ADC2
J16 VDD1V3_RC_ADC2
U16 VDD1V3_RC_ADC1
Y19 VDD1V3_RC_GM1
D19 VDD1V3_RC_GM2
K19 VDD1V3_RC_GM2
T19 VDD1V3_RC_GM1

PP_1V85_SMPS6_IO
C902_K 0.1UF 20% 6.3V X5R-CERM 01005 XCVR
STAR ROUTE
PP_1V8_LDO10_XCVR_HI
C903_K 100PF 5% 25V C0G-CERM 01005 XCVR
C904_K 15UF 20% 6.3V X5R-CERM 0402-0.1MM XCVR
XW900_K SHORT-10L-0.1MM-SM OMIT XCVR
PP_1V8_XCVR_HI_PLL
C911_K 1UF 20% 10V X5R 0201 XCVR
C910_K 1UF 20% 10V X5R 0201 XCVR
PP_1V0_SMPS5_XCVR_CORE
PP_1V85_SMPS6_IO
PP_1V3_SMPS3_XCVR_ANA
STAR ROUTE
XW904_K SHORT-10L-0.1MM-SM OMIT XCVR
C915_K 0.47UF 20% 6.3V X5R 01005 XCVR NOSTUFF
PP_1V3_XCVR_RDRF
C917_K 2200PF 10% 16V X5R-CERM 01005 XCVR
C918_K 0.1UF 20% 6.3V X5R-CERM 01005 XCVR
C919_K 6800PF 10% 6.3V X5R 01005 XCVR
VDD1V3_TXRF = 230MA
C920_K 6800PF 10% 6.3V X5R 01005 XCVR NOSTUFF
XW908_K SHORT-10L-0.1MM-SM OMIT XCVR
PP_1V3_XCVR_CI

VDD1V8_IO_2 G6
VDD1V8_IO U8
VDD1V8_GN A4
VDD1V8_RXPLL_1 AA20
VDD1V8_RXPLL_2 C20
VDD1V8_TXPLL AC4
VDD1V8_CI F13
VDD1V8_CI_2 P7
VDD_MEM_RET AB7
VDD_CEXT_GN D1
VDD_CEXT_TX W2
VDD1V3_MPHY B13
VDD1V3_RDRF F23
VDD1V3_RXRF V23
VDD1V3_TXANA N4
VDD1V3_TXDCO U4
VDD1V3_TXRF V3
VDD1V3_CI G12

SMARTI7 (7/7)

TIE A2 TO SYSTEM GND PLANE.
DO NOT TIE TO SURFACE GND.

U_XCVR_K
PMB5762-A2
UFWLB
SYM 7 OF 7
XCVR

A2 VSS_GN_RF
A6 A14 B3 B5 B15 B19 B21 C4 C10 C16 D5 D15 D21 E4 E6 E8 E10 E12 E14 E16 E18 E20 F15 G8 G10 G14 G16 G20 H15 H17 H21 J2 J4 J6 J8 J10 J12 J14 J18 J20 K5 K13 K15 K17 L8 L10 L12 L14 L16 L18 L20 M5 M7 M13 M21 N2 N10 VSS
N14 N16 N20 P3 P5 P9 P11 P13 P15 P19 P21 R4 R6 R8 R10 R14 R16 R18 R20 T3 T15 T17 T21 U6 U10 U12 U14 U18 U20 V7 V15 V17 V19 V21 W4 W6 W10 W14 W16 W18 W20 Y3 Y13 Y15 Y21 AA4 AA6 AA10 AA14 AA16 AB3 AB13 AB15 AB19 AC6 AC10 AC14 AC20 VSS

MT Pro

SMARTI7 (2/7)

U_XCVR_K
PMB5762-A2
UFWLB
SYM 2 OF 7
XCVR

BB_TO_XCVR_DWB_DATA F9 DWB_SDATA
BB_TO_XCVR_DWB_CLK F11 DWB_SCLK
BB_TO_XCVR_RESET_L W8 RESET_MAIN*
CLK_BBPMU_TO_XCVR_38MHZ H13 FSYS_CLK
V9 TCKC
NC T9 TMSC
90_DIGRF_HI_RX1_P A8 MPHY2_RX1_DAT
90_DIGRF_HI_RX1_N B7 MPHY2_RX1_DATX
90_DIGRF_HI_RX2_P A10 MPHY2_RX2_DAT
90_DIGRF_HI_RX2_N B9 MPHY2_RX2_DATX
90_DIGRF_HI_RX3_P D9 MPHY2_RX3_DAT
90_DIGRF_HI_RX3_N C8 MPHY2_RX3_DATX
90_DIGRF_HI_RX4_P A12 MPHY2_RX4_DAT
90_DIGRF_HI_RX4_N B11 MPHY2_RX4_DATX
90_DIGRF_HI_TX_P D7 MPHY2_TX_DAT
90_DIGRF_HI_TX_N C6 MPHY2_TX_DATX
90_DIGRF_LO_RX_P C14 MPHY1_RX_DAT
90_DIGRF_LO_RX_N D13 MPHY1_RX_DATX
90_DIGRF_LO_TX_P C12 MPHY1_TX_DAT
90_DIGRF_LO_TX_N D11 MPHY1_TX_DATX

GPO0 Y11 NC
GPO1 Y9 NC
GPO2 AB9 UART_AP_TO_GNSS_RTS_L
GPO3 AA8 NC
GPO4 Y7 GNSS_DWB_IRQ
GPO5 AA12 NC
GPO6 AB11 NC
GPO7 AC12 NC
MRFFE_VIO K11 PP_1V8_VIO
MRFFE1_SDATA N12 XCVR_TO_BB_RFFE_DATA
MRFFE1_SCLK M11 XCVR_TO_BB_RFFE_CLK
MRFFE2_SDATA R12 SHIELD_RFFE_TX_SDATA
MRFFE2_SCLK T13 SHIELD_RFFE_TX_SCLK
MRFFE3_SDATA V13 XCVR_TO_FE_RX_RFFE_DATA
MRFFE3_SCLK T11 XCVR_TO_FE_RX_RFFE_CLK
MRFFE4_SDATA W12 NC
MRFFE4_SCLK V11 NC
MAYBE ADD TEST POINTS
SRFFE_VIO H9 PP_1V8_BB_MASTER_IO
SRFFE1_SDATA K7 BB_TO_XCVR_RFFE_DATA
SRFFE1_SCLK K9 BB_TO_XCVR_RFFE_CLK
SRFFE2_SDATA N8 NC
SRFFE2_SCLK M9 NC

C922_K 1000PF 10% 10V X5R 01005 XCVR
C923_K 1000PF 10% 10V X5R 01005 XCVR

XCVR RFFE DAMPING RESISTORS

XCVR_TO_FE_RX_RFFE_DATA — R1820_K 20.0 5% 1/32W MF 01005 — SHIELD_RFFE_RX_SDATA
XCVR_TO_FE_RX_RFFE_CLK — R1821_K 20.0 5% 1/32W MF 01005 — SHIELD_RFFE_RX_SCLK

CONFIDENTIAL AND PROPRIETARY APPLE SYSTEM DESIGN. FOR REFERENCE PURPOSE ONLY - NOT A CHANGE REQUEST

PAGE TITLE: XCVR: INTERFACE & PWR

Apple Inc.

DRAWING NUMBER 051-02695 | SIZE D
REVISION 4.0.0
BRANCH
PAGE 12 OF 27
SHEET 27 OF 47

NOTICE OF PROPRIETARY PROPERTY:
THE INFORMATION CONTAINED HEREIN IS THE PROPRIETARY PROPERTY OF APPLE INC.
THE POSESSOR AGREES TO THE FOLLOWING:
I TO MAINTAIN THIS DOCUMENT IN CONFIDENCE
II NOT TO REPRODUCE OR COPY IT
III NOT TO REVEAL OR PUBLISH IT IN WHOLE OR PART
IV ALL RIGHTS RESERVED

XCVR: PRIMARY/DIVERSITY RX

C1000_K
2.7PF
+/-0.1PF
16V
NP0-C0G
01005-1
XCVR

50_WIFI_LAA_LAT_TO_XCVR_PRX 42

FROM WLAN

L1000_K
0.4NH-+/-0.1NH-1.0A-0.03OHM
01005
XCVR

SMARTI7 PRX (5/7)

U_XCVR_K
PMB5762-A2
UFWLB
SYM 5 OF 7
XCVR

50_COUPLER2_OUT IN 37

TIE L2 TO SYSTEM GND PLANE.
DO NOT TIE TO SURFACE GND.

FBR1	K1	
FBR2	M1	NC
VSS_SHIELD_FBR_1	L2	
RX1	P23	50_RX1_LAA_PRX
RX2	R22	50_XCVR_UHB_PRX
RX3	T23	50_PRX_HB2_PAD_LHB_SDR_IN_XCVR
RX4	U22	50_PRX_HB1_PAD_HB_SDR_IN_XCVR
RX5	W22	
RX6	Y23	50_PRX_MB2_PAD_MB_B_SDR_IN_XCVR
RX7	AA22	50_PRX_LB_PAD_LB2_SDR_IN_XCVR
RX8	AB23	50_RX8_MLB_PRX
RX9	AC22	50_PRX_MB1_PAD_MB_A_SDR_IN_XCVR
RXM1	N22	50_XCVR_RXM1_MB_HB_UHB_PRX
RXM2	M23	

MT Pro

CONNECT ALL UNUSED RX PORTS TO GND.

L1002_K
0.7NH-+/-0.1NH-0.9A-0.05OHM
01005
XCVR
33

L1004_K
0.7NH-+/-0.1NH-0.9A-0.05OHM
01005
XCVR
10 16

L1006_K
0.7NH-+/-0.1NH-0.9A-0.05OHM
01005
XCVR
10 16

L1008_K
1.2NH-+/-0.1NH-0.80A
01005
XCVR
10 16

L1010_K
1.2NH-+/-0.1NH-0.80A
01005
XCVR
10 16

L1012_K
2.0NH-+/-0.1NH-0.70A
01005
XCVR
10 16

L1013_K
2.0NH-+/-0.1NH-0.70A
01005
XCVR
33

L1014_K
0.9NH-+/-0.1NH-0.9A-0.05OHM
01005
XCVR
36

SMARTI7 DRX (6/7)

U_XCVR_K
PMB5762-A2
UFWLB
SYM 6 OF 7
XCVR

RD1	J22	50_RD1_LAA_DRX
RD2	H23	
RD3	G22	
RD4	E22	
RD5	D23	
RD6	C22	
RD7	B23	
RD8	A22	
RDM1	K23	
RDM2	L22	

MT Pro

S7 PORT MAP CHANGE 10/11/2016:
USE RD6 INSTEAD OF RD3.
CONNECT ALL UNUSED RD PORTS TO GND.

C1001_K
2.7PF
+/-0.1PF
16V
NP0-C0G
01005-1
XCVR

50_WIFI_LAA_UAT_TO_XCVR_DRX 42

FROM WLAN

L1001_K
0.4NH-+/-0.1NH-1.0A-0.03OHM
01005
XCVR

50_XCVR_RD2_MB_HB_UHB_DRX 35

L1003_K
0.9NH-+/-0.1NH-0.9A-0.05OHM
01005
XCVR

50_XCVR_LMB_MB_HB_DRX 35

L1005_K
0.9NH-+/-0.1NH-0.9A-0.05OHM
01005
XCVR

50_XCVR_HB_DRX 35

L1007_K
0.8NH-+/-0.1NH-0.9A-0.05OHM
01005
XCVR

50_XCVR_LB_DRX 34

L1009_K
2.2NH-+/-0.1NH-0.50A
01005
XCVR

50_XCVR_RDM1_MB_HB_UHB_DRX 36

L1011_K
0.9NH-+/-0.1NH-0.9A-0.05OHM
01005
XCVR

HARDWARE MT Pro

PAGE TITLE	XCVR: PRX DRX
Apple Inc.	DRAWING NUMBER 051-02695 SIZE D
	REVISION 4.0.0
	BRANCH
	PAGE 13 OF 27
	SHEET 28 OF 47

NOTICE OF PROPRIETARY PROPERTY:
THE INFORMATION CONTAINED HEREIN IS THE PROPRIETARY PROPERTY OF APPLE INC.
THE POSESSOR AGREES TO THE FOLLOWING:
I TO MAINTAIN THIS DOCUMENT IN CONFIDENCE
II NOT TO REPRODUCE OR COPY IT
III NOT TO REVEAL OR PUBLISH IT IN WHOLE OR PART
IV ALL RIGHTS RESERVED

CONFIDENTIAL AND PROPRIETARY APPLE SYSTEM DESIGN. FOR REFERENCE PURPOSE ONLY - NOT A CHANGE REQUEST

KAROO CONFIG

BOOTCFG

BOOTSTRAPS ARE INTERNALLY PULLED DOWN

	HW_MON1	HW_MON2	TRIG_IN
NAND	0	0	1
FLASHLESS	1	0	1
FLASHLESS WDOG DIS	1	1	0
NAND (NON-SECURE)	1	1	1

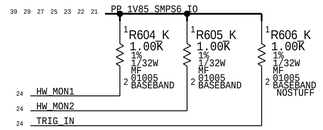

THESE DON'T CHANGE FOR KAROO CONFIG MLBS, DEV ONLY

PERST_L

PERST_L SIGNAL LOW WILL KEEP BB IN RESET.

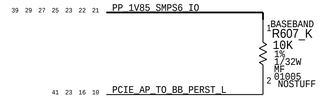

STUFF PU WHEN AP IS NOT CONNECTED
(KAROO CONFIG: USB BOOT)

DEFAULTS SET TO AP/FLASHLESS BOOT

MT Pro

JTAG_RESET_L

TO ENABLE SWD, JTAG_TRST_L MUST BE PULLED HIGH

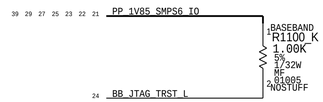

STUFF PU WHEN USING JTAG

HW BUG IN BASEBAND A/B SILICON, FIXED IN C SILICON
NOSTUFF, STARTING AT EVT

SWD ENABLE

TO ENABLE SWD, STUFF R620_K

NOSTUFF WITH PROD FUSED BB

HARDWARE MT Pro

PAGE TITLE	HW CONFIG OPTIONS
Apple Inc.	DRAWING NUMBER 051-02695 · SIZE D
	REVISION 4.0.0
	BRANCH
	PAGE 14 OF 27
	SHEET 29 OF 47

NOTICE OF PROPRIETARY PROPERTY:

THE INFORMATION CONTAINED HEREIN IS THE PROPRIETARY PROPERTY OF APPLE INC.
THE POSESSOR AGREES TO THE FOLLOWING:
I TO MAINTAIN THIS DOCUMENT IN CONFIDENCE
II NOT TO REPRODUCE OR COPY IT
III NOT TO REVEAL OR PUBLISH IT IN WHOLE OR PART
IV ALL RIGHTS RESERVED

CONFIDENTIAL AND PROPRIETARY APPLE SYSTEM DESIGN. FOR REFERENCE PURPOSE ONLY - NOT A CHANGE REQUEST

ET MODULATOR

ALPES STX QM81019 E1.0.1 MODULE

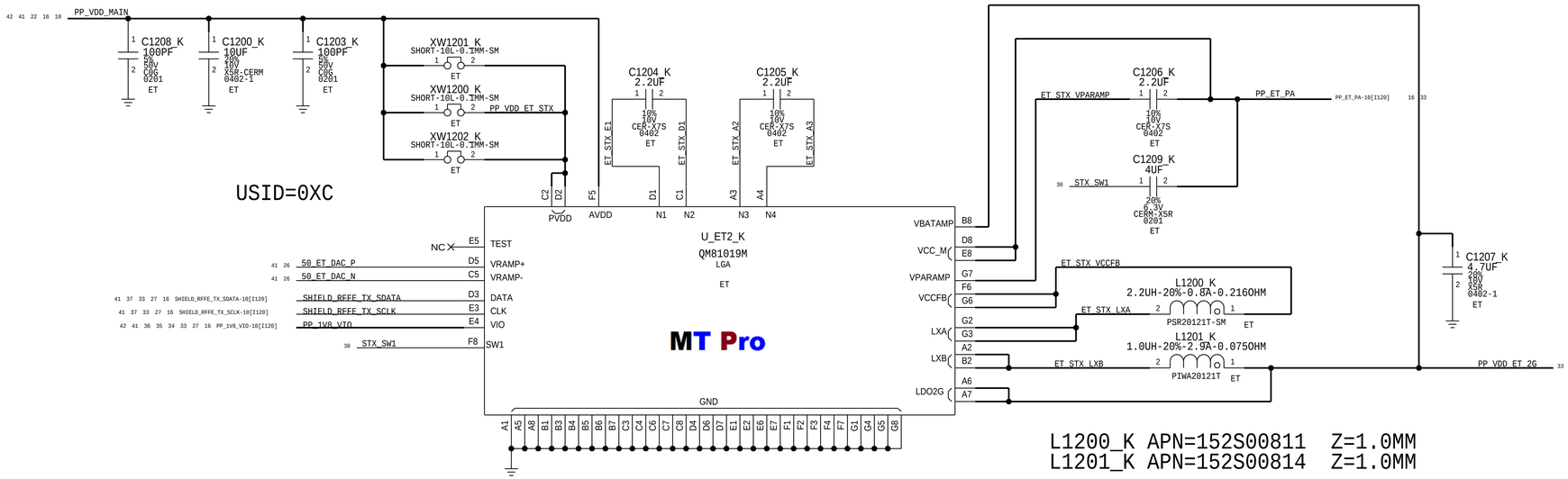

L1200_K APN=152S00811 Z=1.0MM
L1201_K APN=152S00814 Z=1.0MM

STUFFED: C1204_K, C1205_K, C1206_K: KYOCERA APN=138S00167
ALTERNATE: C1204_K, C1205_K, C1206_K: MURATA APN=138S00237

HARDWARE MT Pro

PAGE TITLE	ET
Apple Inc.	DRAWING NUMBER 051-02695 · SIZE D
	REVISION 4.0.0
	BRANCH
	PAGE 15 OF 27
	SHEET 30 OF 47

NOTICE OF PROPRIETARY PROPERTY:
THE INFORMATION CONTAINED HEREIN IS THE PROPRIETARY PROPERTY OF APPLE INC.
THE POSESSOR AGREES TO THE FOLLOWING:
I TO MAINTAIN THIS DOCUMENT IN CONFIDENCE
II NOT TO REPRODUCE OR COPY IT
III NOT TO REVEAL OR PUBLISH IT IN WHOLE OR PART
IV ALL RIGHTS RESERVED

LB SPAD

SEE MLB_LOFT

Mobile1Tech.com

CONFIDENTIAL AND PROPRIETARY APPLE SYSTEM DESIGN. FOR REFERENCE PURPOSE ONLY - NOT A CHANGE REQUEST

HARDWARE MT Pro

PAGE TITLE: LB SPAD

Apple Inc.

DRAWING NUMBER: 051-02695

SIZE: D

REVISION: 4.0.0

BRANCH:

PAGE: 16 OF 27

SHEET: 31 OF 47

NOTICE OF PROPRIETARY PROPERTY:

THE INFORMATION CONTAINED HEREIN IS THE PROPRIETARY PROPERTY OF APPLE INC.
THE POSESSOR AGREES TO THE FOLLOWING:
I TO MAINTAIN THIS DOCUMENT IN CONFIDENCE
II NOT TO REPRODUCE OR COPY IT
III NOT TO REVEAL OR PUBLISH IT IN WHOLE OR PART
IV ALL RIGHTS RESERVED

HB SPAD

SEE MLB_LOFT

Mobile1Tech.com

HARDWARE MT Pro

PAGE TITLE: HB SPAD

Apple Inc.

DRAWING NUMBER: 051-02695

SIZE: D

REVISION: 4.0.0

BRANCH:

PAGE: 17 OF 27

SHEET: 32 OF 47

NOTICE OF PROPRIETARY PROPERTY:

THE INFORMATION CONTAINED HEREIN IS THE PROPRIETARY PROPERTY OF APPLE INC.
THE POSESSOR AGREES TO THE FOLLOWING:
I TO MAINTAIN THIS DOCUMENT IN CONFIDENCE
II NOT TO REPRODUCE OR COPY IT
III NOT TO REVEAL OR PUBLISH IT IN WHOLE OR PART
IV ALL RIGHTS RESERVED

UHB LMB SPAD

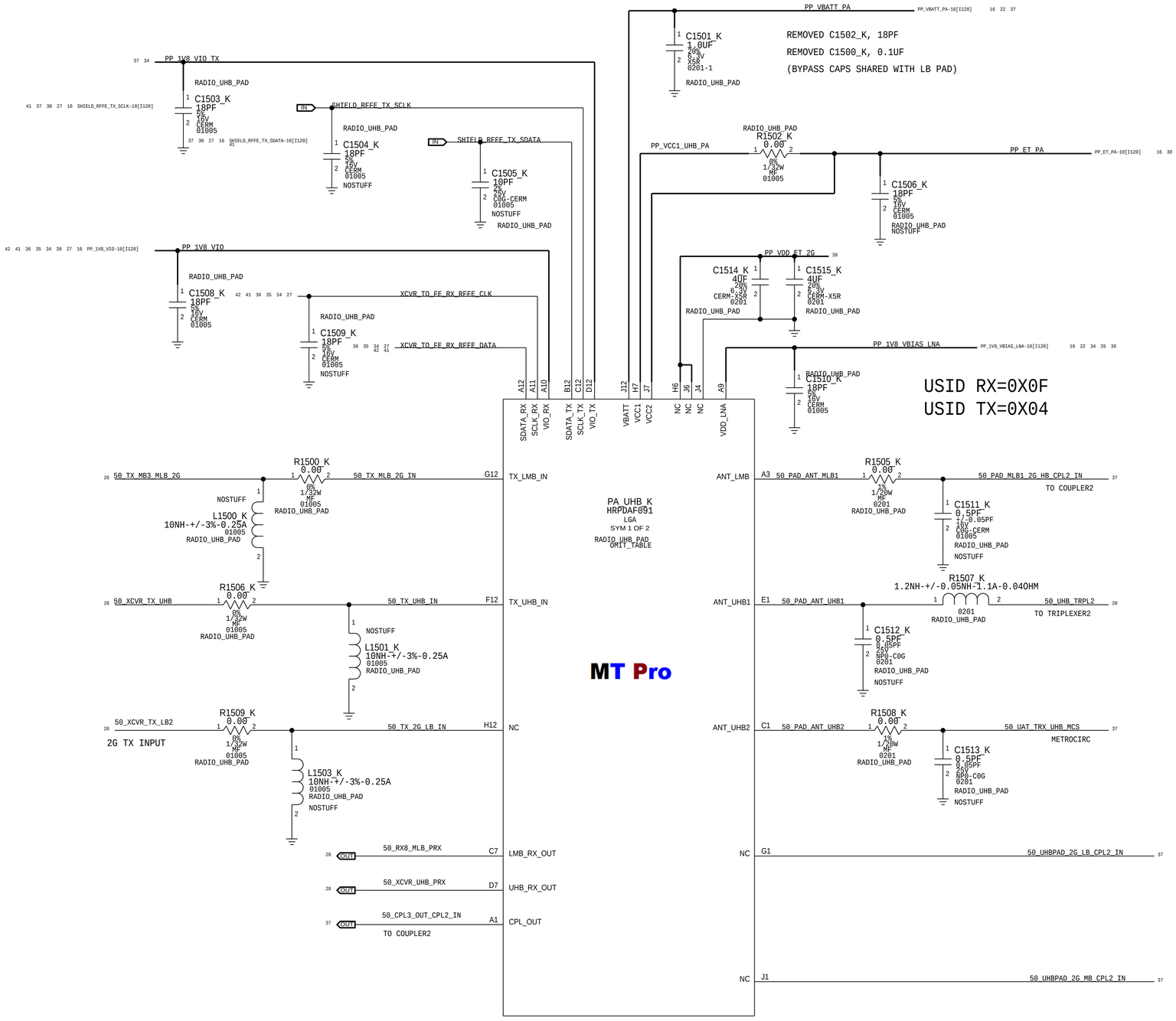

CONFIDENTIAL AND PROPRIETARY APPLE SYSTEM DESIGN. FOR REFERENCE PURPOSE ONLY - NOT A CHANGE REQUEST

HARDWARE MT Pro

PAGE TITLE	UHB LMB SPAD
	Apple Inc.
DRAWING NUMBER	051-02695
SIZE	D
REVISION	4.0.0
BRANCH	
PAGE	18 OF 27
SHEET	33 OF 47

NOTICE OF PROPRIETARY PROPERTY:
THE INFORMATION CONTAINED HEREIN IS THE PROPRIETARY PROPERTY OF APPLE INC.
THE POSESSOR AGREES TO THE FOLLOWING:
I TO MAINTAIN THIS DOCUMENT IN CONFIDENCE
II NOT TO REPRODUCE OR COPY IT
III NOT TO REVEAL OR PUBLISH IT IN WHOLE OR PART
IV ALL RIGHTS RESERVED

LB DIVERSITY RECEIVE LNA

USID RX=0X09

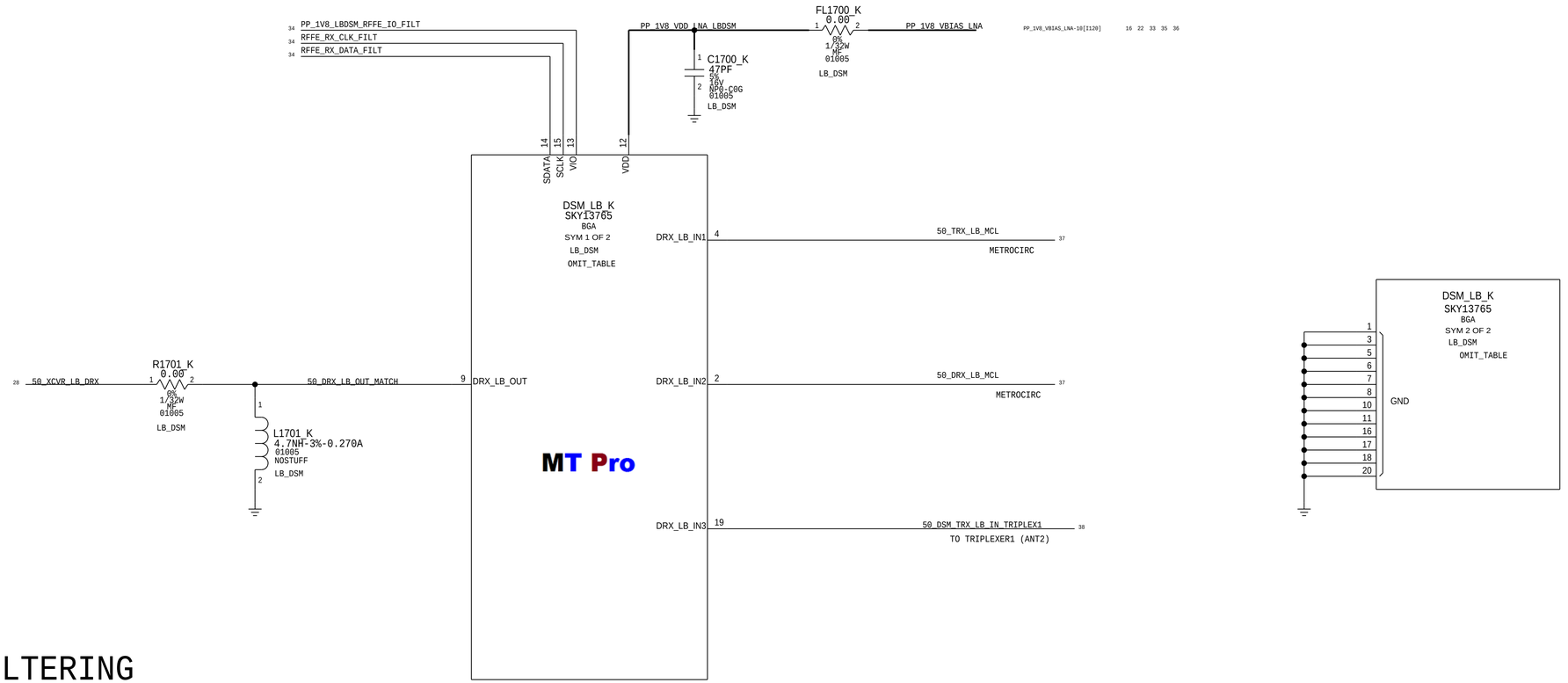

RFFE FILTERING

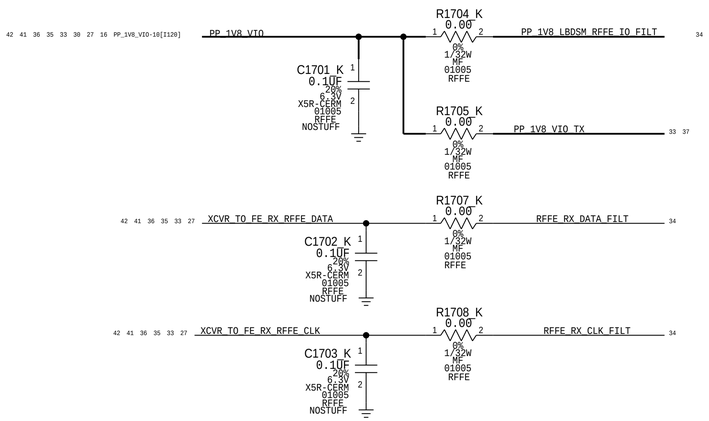

CONFIDENTIAL AND PROPRIETARY APPLE SYSTEM DESIGN. FOR REFERENCE PURPOSE ONLY - NOT A CHANGE REQUEST

HARDWARE MT Pro

PAGE TITLE: LB DIVERSITY RECEIVE LNA

Apple Inc.

NOTICE OF PROPRIETARY PROPERTY:
THE INFORMATION CONTAINED HEREIN IS THE PROPRIETARY PROPERTY OF APPLE INC.
THE POSESSOR AGREES TO THE FOLLOWING:
I TO MAINTAIN THIS DOCUMENT IN CONFIDENCE
II NOT TO REPRODUCE OR COPY IT
III NOT TO REVEAL OR PUBLISH IT IN WHOLE OR PART
IV ALL RIGHTS RESERVED

DRAWING NUMBER: 051-02695
SIZE: D
REVISION: 4.0.0
BRANCH:
PAGE: 19 OF 27
SHEET: 34 OF 47

HB DIVERSITY RECEIVE LNA

DECOUPLING SHARED WITH LB DSM

C1800_K 47PF 5% 16V NP0_C0G 01005 HB_DSM NOSTUFF

C1801_K 0.1UF 20% 6.3V X5R-CERM 01005 HB_DSM

R1800_K 0.00 5% 1/32W MF 01005 HB_DSM

PP_1V8_HB_LB_DSM_IO_FILT

PP_1V8_VIO

PP_1V8_VIO-10[I120] 16 27 30 33 34 36 41 42

R1801_K 0.00 5% 1/32W MF 01005 HB_DSM

PP_1V8_VDD_LNA_HBDSM

PP_1V8_VBIAS_LNA

PP_1V8_VBIAS_LNA-10[I120] 16 22 33 34 36

C1802_K 0.1UF 20% 6.3V X5R-CERM 01005 HB_DSM

XCVR_TO_FE_RX_RFFE_DATA 27 33 34 36 41 42

XCVR_TO_FE_RX_RFFE_CLK 27 33 34 36 41 42

SDATA 30 SCLK 29 VIO 28 VDD 27

USID RX=0X0A

DSM_HB_K SKYI3768 LGA SYM 1 OF 2

50_XCVR_LMB_MB_HB_DRX 28 TO STRIPLINE

R1802_K 0.00 5% 1/32W MF 01005 HB_DSM

50_DRX_HB_OUT1_MATCH 4

L1801_K 4.7NH-3%-0.270A 01005 NOSTUFF HB_DSM

50_DRX_HB_OUT2_MATCH 6

50_XCVR_RD2_MB_HB_UHB_DRX 28 STRIPLINE

R1805_K 0.00 5% 1/32W MF 01005 HB_DSM

8

L1804_K 4.7NH-3%-0.270A 01005 NOSTUFF HB_DSM

50_XCVR_HB_DRX 28 STRIPLINE

R1808_K 0.00 5% 1/32W MF 01005 HB_DSM

50_DRX_HB_OUT3_MATCH

L1806_K 4.7NH-3%-0.270A 01005 NOSTUFF HB_DSM

NC 3 DRX_HB_OUT4

DRX_HB_OUT1

DRX_HB_OUT2

DRX_HB_OUT3

DRX_HB_IN1 21 50_DRX_HB_IN1_MATCH

R1803_K 3.1NH-+/-0.1NH-0.5A-0.17OHM 0201 HB_DSM

50_TRX_HB_MCL 37 METROCIRC

L1800_K 4.7NH-3%-0.35A-0.35OHM 01005 NOSTUFF HB_DSM

L1802_K 0.8PF +/-0.05PF 16V C0G-CERM 01005 HB_DSM

DRX_HB_IN2 24 50_DSM_HB_IN_DRX_MLB_MBHB_MCU_MATCH

C1803_K 0.00 1% 1/20W MF 0201

50_DRX_HB_MCL 37 METROCIRC

L1803_K 4.7NH-3%-0.35A-0.35OHM 01005 NOSTUFF HB_DSM

L1805_K 4.7NH-3%-0.35A-0.35OHM 01005 NOSTUFF HB_DSM

DRX_HB_IN3 22

50_DSM_HB_IN_TRIPLEXER1 38 TO TRIPLEXER1 (ANT2)

DRX_HB_IN4 20 50_HB_DSM_HB_IN4

R1810_K 0.00 1% 1/20W MF 0201 HB_DSM

50_HB_DSM_HB_IN4_TRIPL2 20 TO TRIPLEXER2 (ANT4)

L1808_K 10NH-3%-0.16A-1.63OHM 01005 HB_DSM

DRX_HB_IN5 19

50_DSM_MM2_MHB_IN5 36 TO MIMO RDM (DSM_MM2_K)

MT Pro

DRX_UHB_IN2 14

50_UAT_TRX_UHB_MCS 37 METROCIRC

DRX_UHB_IN3 16 50_DSM_HB_IN_TRX_UHB

R1914_K 1.0NH-+/-0.1NH-0.9A-0.05OHM 01005 MIMO_RDM

50_DSM_MM2_UHB_TRIPL2 20 TO TRIPLEXER2

L1908_K 10NH-+/-3%-0.25A 01005 MIMO_RDM NOSTUFF

GPO1 10 NC

GPO2 11 NC

GPO3 12 NC

DSM_HB_K SKYI3768 LGA SYM 2 OF 2

GND 1, 2, 5, 7, 9, 13, 15, 17, 18, 23, 25, 26

HARDWARE MT Pro

PAGE TITLE	HB DIVERSITY RECEIVE LNA
Apple Inc.	DRAWING NUMBER 051-02695 · SIZE D
	REVISION 4.0.0
	BRANCH
	PAGE 20 OF 27
	SHEET 35 OF 47

NOTICE OF PROPRIETARY PROPERTY:
THE INFORMATION CONTAINED HEREIN IS THE PROPRIETARY PROPERTY OF APPLE INC.
THE POSESSOR AGREES TO THE FOLLOWING:
I TO MAINTAIN THIS DOCUMENT IN CONFIDENCE
II NOT TO REPRODUCE OR COPY IT
III NOT TO REVEAL OR PUBLISH IT IN WHOLE OR PART
IV ALL RIGHTS RESERVED

CONFIDENTIAL AND PROPRIETARY APPLE SYSTEM DESIGN. FOR REFERENCE PURPOSE ONLY - NOT A CHANGE REQUEST

MIMO RECEIVE LNAS

USID RX=0X3 (MIMO RPM)

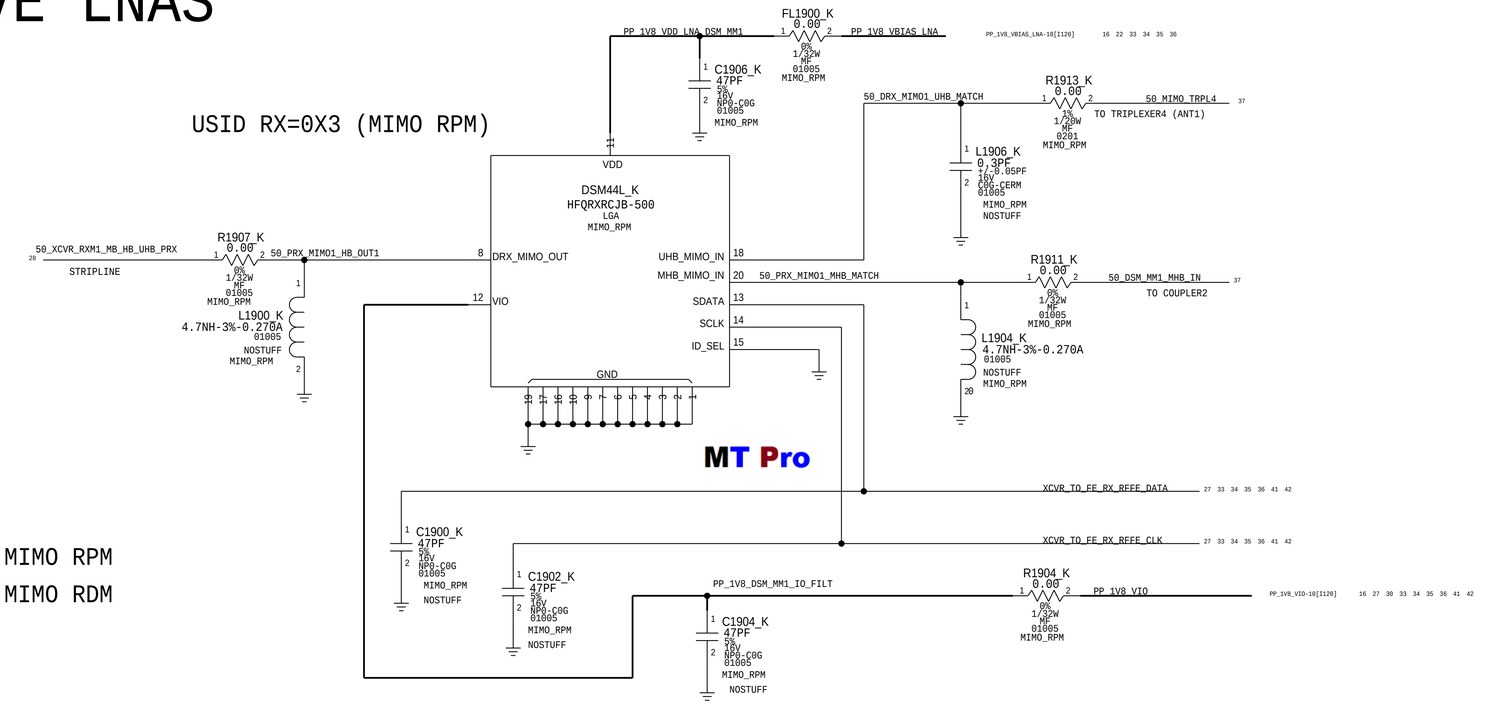

ID_SEL = 0, MIMO RPM

ID_SEL = 1, MIMO RDM

USID RX=0X4 (MIMO RDM)

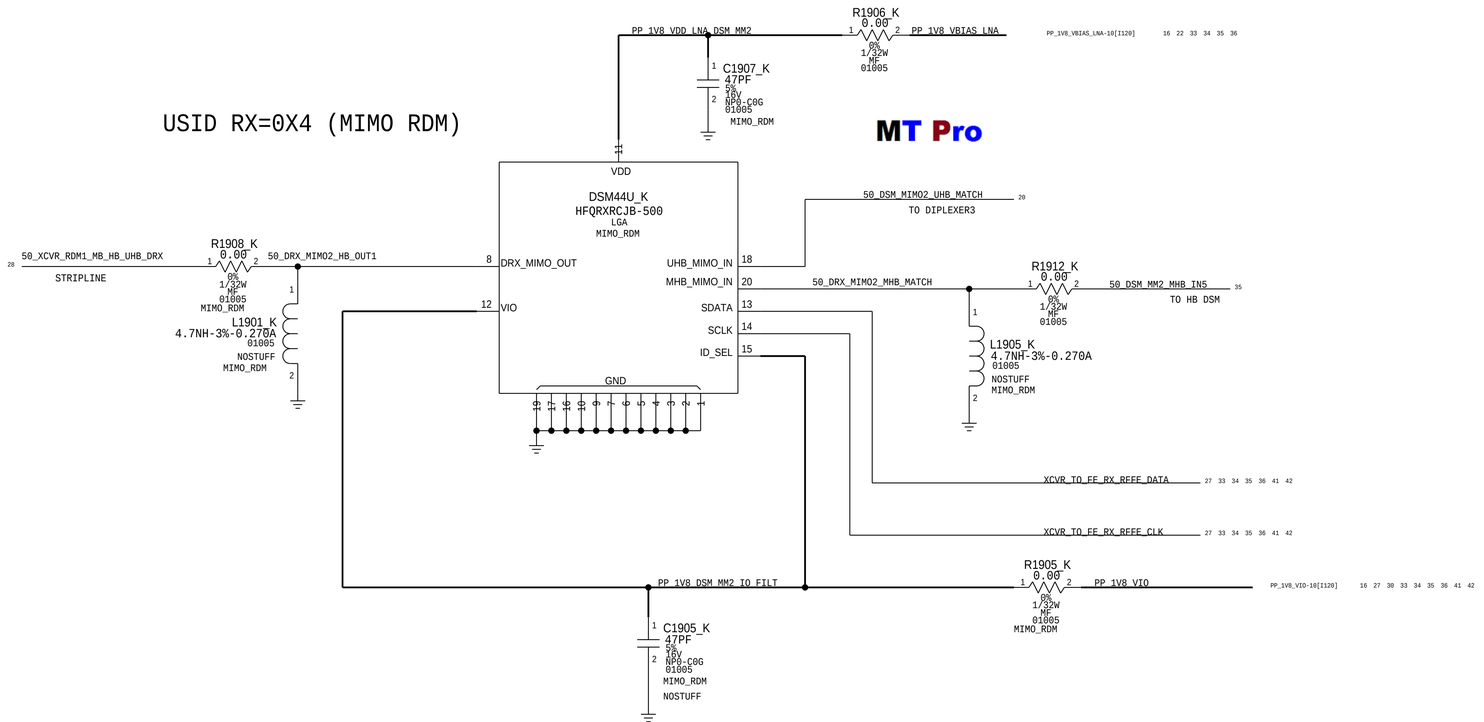

HARDWARE MT Pro

PAGE TITLE	MIMO RECEIVE LNAS
	Apple Inc.
DRAWING NUMBER	051-02695
SIZE	D
REVISION	4.0.0
BRANCH	
PAGE	21 OF 27
SHEET	36 OF 47

NOTICE OF PROPRIETARY PROPERTY:

THE INFORMATION CONTAINED HEREIN IS THE PROPRIETARY PROPERTY OF APPLE INC.
THE POSESSOR AGREES TO THE FOLLOWING:
I TO MAINTAIN THIS DOCUMENT IN CONFIDENCE
II NOT TO REPRODUCE OR COPY IT
III NOT TO REVEAL OR PUBLISH IT IN WHOLE OR PART
IV ALL RIGHTS RESERVED

COUPLER & LOWER ANTENNA

USID TX=0X06

METROCIRC REPLACEMENT

(CPL2 END) (DSM END)

ANT1

LB-MHB-UHB TRIPLEXER4 (ANT1)

ALIAS FOR LAYOUT PURPOSES

MT Pro

PAGE TITLE	COUPLER + LOWER ANTENNA
Apple Inc.	DRAWING NUMBER 051-02695 · SIZE D
	REVISION 4.0.0
	BRANCH
	PAGE 22 OF 27
	SHEET 37 OF 47

NOTICE OF PROPRIETARY PROPERTY:
THE INFORMATION CONTAINED HEREIN IS THE PROPRIETARY PROPERTY OF APPLE INC.
THE POSESSOR AGREES TO THE FOLLOWING:
I TO MAINTAIN THIS DOCUMENT IN CONFIDENCE
II NOT TO REPRODUCE OR COPY IT
III NOT TO REVEAL OR PUBLISH IT IN WHOLE OR PART
IV ALL RIGHTS RESERVED

CONFIDENTIAL AND PROPRIETARY APPLE SYSTEM DESIGN. FOR REFERENCE PURPOSE ONLY - NOT A CHANGE REQUEST

UPPER ANTENNA FEEDS

LB/MHB/GPS TRIPLEXER1

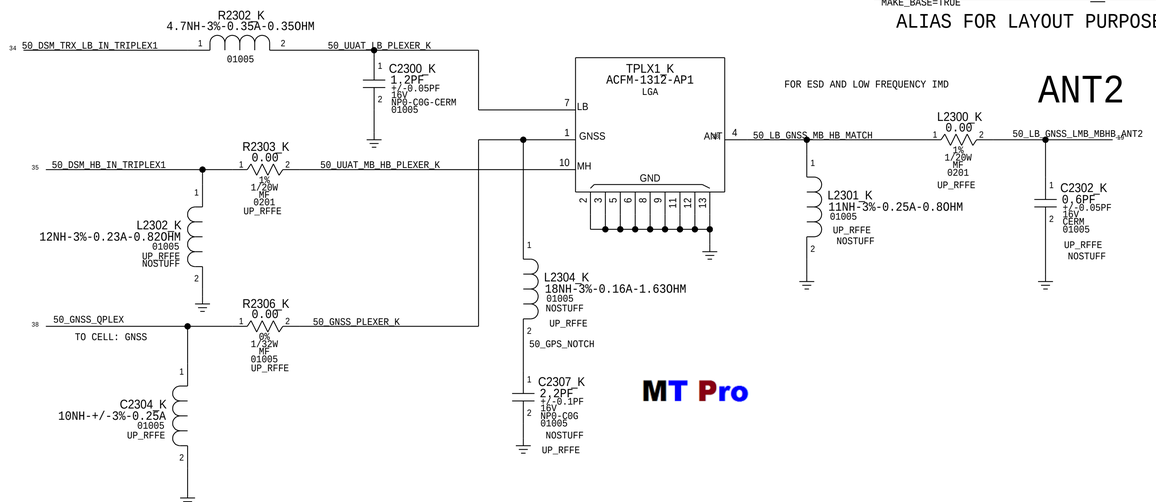

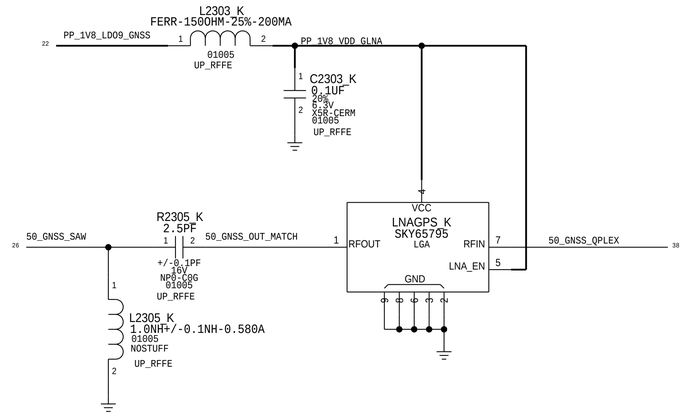

MT Pro

HARDWARE MT Pro

PAGE TITLE	UPPER ANTENNA FEEDS
Apple Inc.	DRAWING NUMBER 051-02695 SIZE D
	REVISION 4.0.0
	BRANCH
	PAGE 23 OF 27
	SHEET 38 OF 47

NOTICE OF PROPRIETARY PROPERTY:
THE INFORMATION CONTAINED HEREIN IS THE PROPRIETARY PROPERTY OF APPLE INC.
THE POSESSOR AGREES TO THE FOLLOWING:
I TO MAINTAIN THIS DOCUMENT IN CONFIDENCE
II NOT TO REPRODUCE OR COPY IT
III NOT TO REVEAL OR PUBLISH IT IN WHOLE OR PART
IV ALL RIGHTS RESERVED

ESIM

41 40 23 SIM2_CLK — MAKE_BASE=TRUE — SIM2_CLK 39
41 40 23 SIM2_DATA — MAKE_BASE=TRUE — SIM2_DATA 39
41 40 23 SIM2_RST — MAKE_BASE=TRUE — SIM2_RST 39
41 40 23 SIM2_DETECT — MAKE_BASE=TRUE — SIM2_DETECT 39
41 40 25 22 PP_VDD_SIM2 — MAKE_BASE=TRUE — PP_VDD_SIM2 39
41 SIM2_DATA_R — MAKE_BASE=TRUE — SIM2_DATA_R 39

VINYL
APN: 998-14441
NJ0, BIRCH 4.0 DEV 2

MT Pro

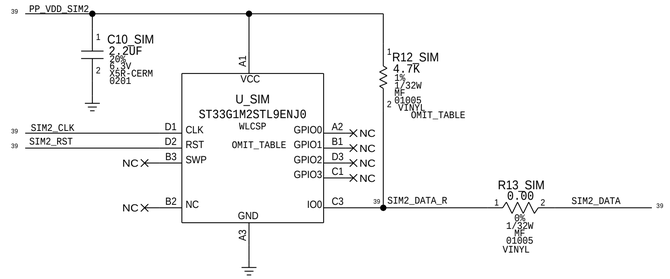

ESIM DETECT

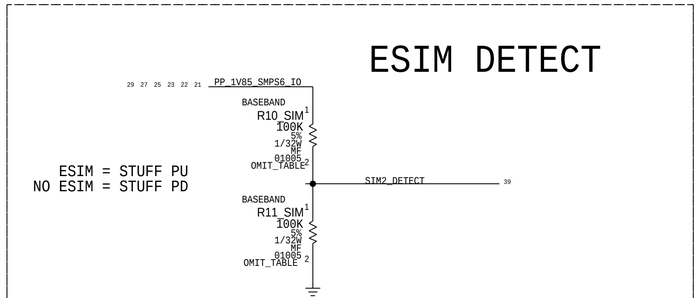

HARDWARE MT Pro

PAGE TITLE
SIM: ESIM

Apple Inc.

DRAWING NUMBER 051-02695
SIZE D
REVISION 4.0.0
BRANCH
PAGE 24 OF 27
SHEET 39 OF 47

NOTICE OF PROPRIETARY PROPERTY:
THE INFORMATION CONTAINED HEREIN IS THE PROPRIETARY PROPERTY OF APPLE INC.
THE POSESSOR AGREES TO THE FOLLOWING:
I TO MAINTAIN THIS DOCUMENT IN CONFIDENCE
II NOT TO REPRODUCE OR COPY IT
III NOT TO REVEAL OR PUBLISH IT IN WHOLE OR PART
IV ALL RIGHTS RESERVED

PSIM

ICE18.2 DUAL PHYSICAL SIM

SINGLE SIM APN:512S00038
DUAL SIM APN:512S00039

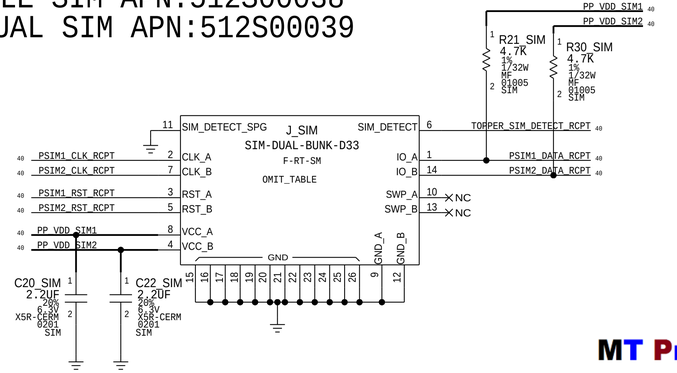

MT Pro

DUAL SIM DETECT

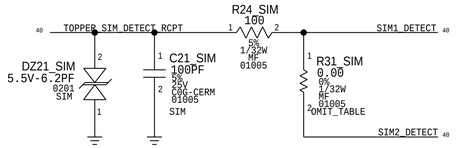

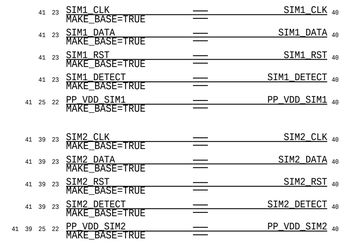

ESD DIODES

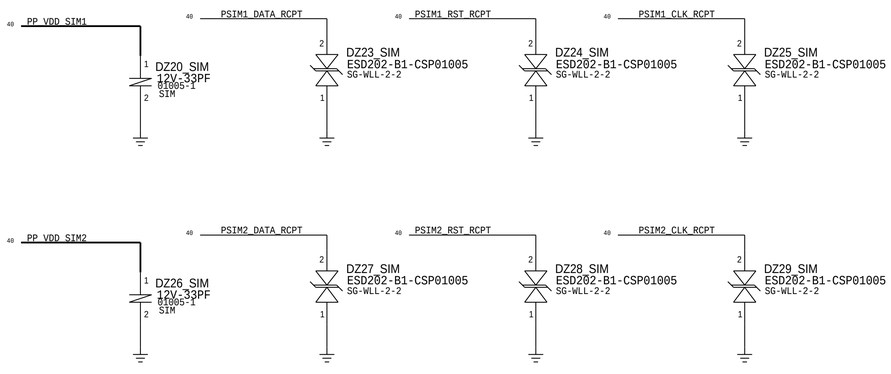

EOS RESISTORS

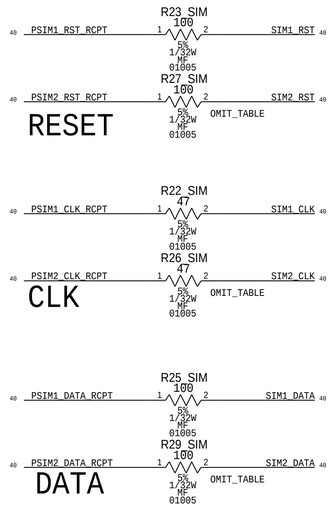

HARDWARE MT Pro

PAGE TITLE	SIM: PSIM
Apple Inc.	DRAWING NUMBER 051-02695 · SIZE D
	REVISION 4.0.0
	BRANCH
	PAGE 25 OF 27
	SHEET 40 OF 47

NOTICE OF PROPRIETARY PROPERTY:
THE INFORMATION CONTAINED HEREIN IS THE PROPRIETARY PROPERTY OF APPLE INC.
THE POSESSOR AGREES TO THE FOLLOWING:
I TO MAINTAIN THIS DOCUMENT IN CONFIDENCE
II NOT TO REPRODUCE OR COPY IT
III NOT TO REVEAL OR PUBLISH IT IN WHOLE OR PART
IV ALL RIGHTS RESERVED

DEBUG: TEST POINTS

DEBUG

PP2450_K P2MM-NSM OMIT_SM PP 1 — BB_DEBUG_ERROR — 23 41

PP24C0_K P2MM-NSM OMIT_SM PP 1 — BB_JTAG_TDO — 24

PP24C1_K P2MM-NSM OMIT_SM PP 1 — BB_JTAG_TDI — 24

PP2401_K P2MM-NSM OMIT_SM PP 1 — BBPMU_TO_BB_MEAS_RDY — 21 23

POWER-KEEPING

PP2497_K P2MM-NSM OMIT_SM PP 1 — AP_TO_BBPMU_RADIO_ON_L — 10 16 21

PP2410_K P2MM-NSM OMIT_SM PP 1 — BB_TO_XCVR_RESET_L — 23 27

PP24A9_K P2MM-NSM OMIT_SM PP 1 — BB_TO_BBPMU_SDWN_L — 21 23

PP2425_K P2MM-NSM OMIT_SM PP 1 — BBPMU_TO_BB_RESET_L — 21 23

PP24H7_K P2MM-NSM OMIT_SM PP 1 — BB_TO_AP_RESET_DETECT_L — 10 16 23

COEXISTENCE

PP24A5_K P2MM-NSM OMIT_SM PP 1 — BB_TO_MANY_GSM_BURST_IND — 10 16 24

PP24L0_K P2MM-NSM OMIT_SM PP 1 — AOP_TO_BBPMU_COEX — 10 16 21

PP24J7_K P2MM-NSM OMIT_SM PP 1 — TOUCH_TO_MANY_FORCE_PWM — 10 16 22

PEAK-POWER

PP2494_K P2MM-NSM OMIT_SM PP 1 — AP_TO_BB_PEAK_POWER_INDICATOR — 10 16 23

ET

PP2434_K P2MM-NSM OMIT_SM PP 1 — 50_ET_DAC_P — 26 30

PP2435_K P2MM-NSM OMIT_SM PP 1 — 50_ET_DAC_N — 26 30

BBPMU RP

PP24G0_K P2MM-NSM OMIT_SM PP 1 — BB_TO_BBPMU_RP_SCL — 21 23

PP24G1_K P2MM-NSM OMIT_SM PP 1 — BB_TO_BBPMU_RP_SDA — 21 23

I2C

PP24E2_K P2MM-NSM OMIT_SM PP 1 — I2C_BB_EEPROM_SDA — 23

PP24E3_K P2MM-NSM OMIT_SM PP 1 — I2C_BB_EEPROM_SCL — 23

I2S

PP24A1_K P2MM-NSM OMIT_SM PP 1 — I2S_BB_TO_AP_BCLK — 10 16 23

PP24A2_K P2MM-NSM OMIT_SM PP 1 — I2S_BB_TO_AP_LRCLK — 10 16 23

PP24A3_K P2MM-NSM OMIT_SM PP 1 — I2S_AP_TO_BB_DOUT — 10 16 23

PP24A4_K P2MM-NSM OMIT_SM PP 1 — I2S_BB_TO_AP_DIN — 10 16 23

BB RFFE

PP2486_K P2MM-NSM OMIT_SM PP 1 — BB_TO_UAT_RFFE_DATA — 19 23

PP2487_K P2MM-NSM OMIT_SM PP 1 — BB_TO_UAT_RFFE_CLK — 19 23

PP2488_K P2MM-NSM OMIT_SM PP 1 — BB_TO_LAT_RFFE_CLK — 19 23

PP2489_K P2MM-NSM OMIT_SM PP 1 — BB_TO_LAT_RFFE_DATA — 19 23

PP24A7_K P2MM-NSM OMIT_SM PP 1 — BB_TO_XCVR_DWB_CLK — 23 27

PP24A8_K P2MM-NSM OMIT_SM PP 1 — BB_TO_XCVR_DWB_DATA — 23 27

PP24E0_K P2MM-NSM OMIT_SM PP 1 — PP_1V8_BB_MASTER_IO — 23 27

CLKS

PP2427_K P2MM-NSM OMIT_SM PP 1 — TP_TO_BBPMU_EXT_CLK_EN — 21

PP2483_K P2MM-NSM OMIT_SM PP 1 — CLK_BBPMU_TO_TP_EXT_38MHZ — 21

PP24F0_K P2MM-NSM OMIT_SM PP 1 — TP_TO_BBPMU_SMARTI2_CLK_EN — 21

PP24F1_K P2MM-NSM OMIT_SM PP 1 — CLK_BBPMU_TO_TP_SMARTI2_38MHZ — 21

PP24G9_K P2MM-NSM OMIT_SM PP 1 — BB_TO_BBPMU_CLK_EN — 21 23

PP2429_K P2MM-NSM OMIT_SM PP 1 — CLK_BBPMU_TO_BB_38MHZ — 21 23

PP24H0_K P2MM-NSM OMIT_SM PP 1 — GNSS_TO_BBPMU_CLK_EN — 21 26

PP2485_K P2MM-NSM OMIT_SM PP 1 — CLK_BBPMU_TO_XCVR_38MHZ — 21 27

PP24G7_K P2MM-NSM OMIT_SM PP 1 — CLK_BBPMU_32KHZ — 21 23 26

AP COEX

PP2492_K P2MM-NSM OMIT_SM PP 1 — AP_TO_BB_COEX — 10 16 23

PP2495_K P2MM-NSM OMIT_SM PP 1 — BB_TO_AP_COEX — 10 16 23
NO_TEST=1

LOFT CANARY

PP24J5_K P2MM-NSM OMIT_SM PP 1 — LOFT_CANARY_1 — 10 16 23

PP2416_K P2MM-NSM OMIT_SM PP 1 — LOFT_CANARY_2 — 10 16 23

VDIO

PP24E7_K P2MM-NSM OMIT_SM PP 1 — BBPMU_ANAMON — 21

PP2411_K P2MM-NSM OMIT_SM PP 1 — BB_TO_BBPMU_VDIO — 21 23

PP2422_K P2MM-NSM OMIT_SM PP 1 — BB_TO_BBPMU_VCLK — 21 23

PP2409_K P2MM-NSM OMIT_SM PP 1 — BBPMU_TO_BB_ALERT_L — 21 23

AOP UART

PP24E5_K P2MM-NSM OMIT_SM PP 1 — UART_BB_TO_AOP_RXD — 10 16 23

PP24E6_K P2MM-NSM OMIT_SM PP 1 — UART_AOP_TO_BB_TXD — 10 16 23

XCVR RFFE

PP24E8_K P2MM-NSM OMIT_SM PP 1 — PP_1V8_VIO — PP_1V8_VIO-10[I120] 16 27 30 33 34 35 36 41 42

PP2457_K P2MM-NSM OMIT_SM PP 1 — BB_TO_XCVR_RFFE_DATA — 23 27

PP2468_K P2MM-NSM OMIT_SM PP 1 — BB_TO_XCVR_RFFE_CLK — 23 27

PP2469_K P2MM-NSM OMIT_SM PP 1 — XCVR_TO_BB_RFFE_DATA — 23 27

PP2470_K P2MM-NSM OMIT_SM PP 1 — XCVR_TO_BB_RFFE_CLK — 23 27

PP2471_K P2MM-NSM OMIT_SM PP 1 — SHIELD_RFFE_TX_SDATA

PP2472_K P2MM-NSM OMIT_SM PP 1 — SHIELD_RFFE_TX_SCLK

PP2473_K P2MM-NSM OMIT_SM PP 1 — XCVR_TO_FE_RX_RFFE_DATA — 27 33 34 35 36 41 42

PP2474_K P2MM-NSM OMIT_SM PP 1 — XCVR_TO_FE_RX_RFFE_CLK — 27 33 34 35 36 41 42

PP24K0_K P2MM-NSM OMIT_SM PP 1 — SHIELD_RFFE_TX_SDATA

PP24K1_K P2MM-NSM OMIT_SM PP 1 — SHIELD_RFFE_TX_SCLK

PP24K2_K P2MM-NSM OMIT_SM PP 1 — SHIELD_RFFE_TX_SDATA

PP24K3_K P2MM-NSM OMIT_SM PP 1 — SHIELD_RFFE_TX_SCLK

PCIE

PP2442_K P2MM-NSM OMIT_SM PP 1 — 90_PCIE_AP_TO_BB_TXD_P — 10 16 23

PP2443_K P2MM-NSM OMIT_SM PP 1 — 90_PCIE_AP_TO_BB_TXD_N — 10 16 23

PP2444_K P2MM-NSM OMIT_SM PP 1 — 90_PCIE_AP_TO_BB_REFCLK_P — 10 16 23

PP2445_K P2MM-NSM OMIT_SM PP 1 — 90_PCIE_AP_TO_BB_REFCLK_N — 10 16 23

PP24G2_K P2MM-NSM OMIT_SM PP 1 — BB_TO_PMU_PCIE_HOST_WAKE_L — 10 16 23

PP24G5_K P2MM-NSM OMIT_SM PP 1 — PCIE_BB_BI_AP_CLKREQ_L — 10 16 23

DIGRF

LO

PP24B0_K P2MM-NSM OMIT_SM PP 1 — 90_DIGRF_LO_TX_P — 23 27

PP24B1_K P2MM-NSM OMIT_SM PP 1 — 90_DIGRF_LO_TX_N — 23 27

PP24B2_K P2MM-NSM OMIT_SM PP 1 — 90_DIGRF_LO_RX_P — 23 27

PP24B3_K P2MM-NSM OMIT_SM PP 1 — 90_DIGRF_LO_RX_N — 23 27

PP24B4_K P2MM-NSM OMIT_SM PP 1 — 90_DIGRF_HI_TX_P — 23 27

PP24B5_K P2MM-NSM OMIT_SM PP 1 — 90_DIGRF_HI_TX_N — 23 27

PP24B6_K P2MM-NSM OMIT_SM PP 1 — 90_DIGRF_HI_RX1_P — 23 27

PP24B7_K P2MM-NSM OMIT_SM PP 1 — 90_DIGRF_HI_RX1_N — 23 27

PP24D0_K P2MM-NSM OMIT_SM PP 1 — 90_DIGRF_HI_RX2_P — 23 27

PP24D1_K P2MM-NSM OMIT_SM PP 1 — 90_DIGRF_HI_RX2_N — 23 27

PP24D2_K P2MM-NSM OMIT_SM PP 1 — 90_DIGRF_HI_RX3_P — 23 27

PP24D3_K P2MM-NSM OMIT_SM PP 1 — 90_DIGRF_HI_RX3_N — 23 27

PP24D5_K P2MM-NSM OMIT_SM PP 1 — 90_DIGRF_HI_RX4_P — 23 27
SHIELD_RFFE_TX_SDATA-10[I120] 16 27 30 33 37 41

PP24D6_K P2MM-NSM OMIT_SM PP 1 — 90_DIGRF_HI_RX4_N — 23 27
SHIELD_RFFE_TX_SCLK-10[I120] 16 27 30 33 37 41

HI

SMPS

PP24H1_K P2MM-NSM OMIT_SM PP 1 — VDD_SMPS1_0V9_COEX — 22

PP24H2_K P2MM-NSM OMIT_SM PP 1 — VDD_SMPS2_0V8_COEX — 22
SHIELD_RFFE_TX_SDATA-10[I120] 16 27 30 33 37 41

PP24J3_K P2MM-NSM OMIT_SM PP 1 — VDD_SMPS3_1V3_COEX — 22
SHIELD_RFFE_TX_SCLK-10[I120] 16 27 30 33 37 41

PP24H4_K P2MM-NSM OMIT_SM PP 1 — VDD_SMPS4_0V77_COEX — 22
SHIELD_RFFE_TX_SDATA-10[I120] 16 27 30 33 37 41
SHIELD_RFFE_TX_SCLK-10[I120] 16 27 30 33 37 41

PP24H5_K P2MM-NSM OMIT_SM PP 1 — VDD_SMPS5_1V0_COEX — 22

PP24H6_K P2MM-NSM OMIT_SM PP 1 — VDD_SMPS6_1V85_COEX — 22

GNSS

PP24E9_K P2MM-NSM OMIT_SM PP 1 — UART_BBPMU_TO_GNSS_1W — 21 26

PP24E4_K P2MM-NSM OMIT_SM PP 1 — GNSS_DWB_IRQ — 23 27

PP24A6_K P2MM-NSM OMIT_SM PP 1 — AP_TO_GNSS_TIME_MARK — 10 16 26

PP2419_K P2MM-NSM OMIT_SM PP 1 — GNSS_TO_BBPMU_LNA_EN — 21 26

BBPMU

PP24G6_K P2MM-NSM OMIT_SM PP 1 — BBPMU_TO_BB_PWRGOOD — 21 23

PP24G8_K P2MM-NSM OMIT_SM PP 1 — BBPMU_TO_BB_RESET_SD_L — 21 23

PP24F2_K P2MM-NSM OMIT_SM PP 1 — PMU_1PIN_BOOT_STRAP — 21

BB GPIOS

PP24G3_K P2MM-NSM OMIT_SM PP 1 — AP_TO_BB_COREDUMP_TRIG — 10 16 23

PP24F5_K P2MM-NSM OMIT_SM PP 1 — BB_RESET2_L_TEST — 23

PP24G4_K P2MM-NSM OMIT_SM PP 1 — BB_TO_BBPMU_STBY — 21 23

PP24H8_K P2MM-NSM OMIT_SM PP 1 — BB_DEBUG_ERROR — 23 41

AP PMU RAILS

PP2413_K P2MM-NSM OMIT_SM PP 1 — PP1V8_S2 — 10 16 19 41 42

PP2414_K P2MM-NSM OMIT_SM PP 1 — PP3V0_S2 — 10 16 19

DEBUG CONNECTOR

FLEX: 516S00037
MLB_BOT: 516S00038

NOSTUFF

J_DEBUG
BM28P0.6-44DS-0.35V
F-ST-SM

16 10 20	UART_GNSS_TO_AP_RXD	1	2	90_USB_BB_P	16 23
	NC	3	4	90_USB_BB_N	16 23
23 16	PP_1V8_BB_USB_VBUS	5	6	NC	
	NC	7	8	SIM1_RST	23 40
29 23 16 10	PCIE_AP_TO_BB_PERST_L	9	10	SIM2_CLK	23 39 40
21 16 10	PMU_TO_BBPMU_RESET_L	11	12	SIM1_DATA	23 40
26 16 10	UART_AP_TO_GNSS_TXD	13	14	NC	
41 23 16 10	AP_TO_BB_RESET_L	15	16	SIM1_DETECT	23 40
	NC	17	18	PP_VDD_SIM1	22 25 40
	ICE_DETECT_L	19	20	PP_VDD_SIM2	22 25 39 40
24 16 10	SWD_AOP_BI_BB_SWDIO	21	22	SIM2_DATA	23 39 40
	NC	23	24	SIM2_RST	23 39 40
41 23 16 10	AP_TO_BB_RESET_L	25	26	SIM2_DATA_R	39
26 16 10	UART_GNSS_TO_AP_CTS_L	27	28	NC	
27 16 10	UART_AP_TO_GNSS_RTS_L	29	30	UART_BB_DEBUG_TXD	23
	NC	31	32	SWD_JTAG_TCK_SWDCLK_R	24 29
42 41 19 16 10	PP1V8_S2	33	34	SIM2_DETECT	23 39 40
40 23	SIM1_CLK	35	36	UART_BB_DEBUG_RXD	23
26 21 16 10	PMU_TO_GNSS_EN	37	38	UART_COEX_WLAN_TO_BB_TXD	23 42
26 16 10	GNSS_TO_AP_LOW_PWR_IND	39	40	UART_COEX_BB_TO_WLAN_TXD	23 42
		41	42	NC	
	NC	43	44	NC	
42 30 22 16 10	PP_VDD_MAIN	47	48		

WLAN RFFE

PP24J0_K P2MM-NSM OMIT_SM PP 1 — XCVR_TO_FE_RX_RFFE_DATA — 27 33 34 35 36 41 42

PP24J1_K P2MM-NSM OMIT_SM PP 1 — XCVR_TO_FE_RX_RFFE_CLK — 27 33 34 35 36 41 42

PP24J2_K P2MM-NSM OMIT_SM PP 1 — PP_1V8_VIO — PP_1V8_VIO-10[I120] 16 27 30 33 34 35 36 41 42

PAGE TITLE: TEST POINTS

Apple Inc.

DRAWING NUMBER: 051-02695 SIZE: D
REVISION: 4.0.0
BRANCH:
PAGE: 26 OF 27
SHEET: 41 OF 47

NOTICE OF PROPRIETARY PROPERTY:
THE INFORMATION CONTAINED HEREIN IS THE PROPRIETARY PROPERTY OF APPLE INC.
THE POSESSOR AGREES TO THE FOLLOWING:
I TO MAINTAIN THIS DOCUMENT IN CONFIDENCE
II NOT TO REPRODUCE OR COPY IT
III NOT TO REVEAL OR PUBLISH IT IN WHOLE OR PART
IV ALL RIGHTS RESERVED

SYMBOL: WIFI

HIERARCHICAL SYMBOL FOR HIER_WIFI

MT Pro

DIETCOKE

HIER_WIFI

I1

hier_wifi

POWER KEEPING

44 41 30 22 16 10	PP_VDD_MAIN	PP_VDD_MAIN
44 41 19 16 10	PP1V8_S2	PP1V8_APPMU_S2
44 16 10	PMU_TO_WLAN_REG_ON	APPMU_TO_WLAN_REG_ON
44 16 10	PMU_TO_BT_REG_ON	APPMU_TO_BT_REG_ON
44 16 10	AP_TO_BT_DEVICE_WAKE	AP_TO_BT_DEV_WAKE

CLOCKS

44 16 10	AP_TO_WLAN_TIME_SYNC	WLAN_TO_AP_TIME_SYNC
44 16 10	BT_TO_AP_TIME_SYNC	BT_TO_AP_TIME_SYNC
44 16 10	PMU_TO_WLAN_CLK32K	APPMU_TO_WLAN_32K_CLK

PCIE

44 16 10	90_PCIE_WLAN_TO_AP_RXD_P	90_PCIE_WLAN_TO_AP_TX_P
44 16 10	90_PCIE_WLAN_TO_AP_RXD_N	90_PCIE_WLAN_TO_AP_TX_N
44 16 10	90_PCIE_AP_TO_WLAN_TXD_P	90_PCIE_AP_TO_WLAN_TX_P
44 16 10	90_PCIE_AP_TO_WLAN_TXD_N	90_PCIE_AP_TO_WLAN_TX_N
44 16 10	90_PCIE_AP_TO_WLAN_REFCLK_P	90_PCIE_AP_TO_WLAN_REFCLK_P
44 16 10	90_PCIE_AP_TO_WLAN_REFCLK_N	90_PCIE_AP_TO_WLAN_REFCLK_N
44 16 10	WLAN_TO_PMU_HOST_WAKE	BTWLAN_TO_APPMU_HOST_WAKE
44 16 10	PCIE_AP_TO_WLAN_PERST_L	PCIE_AP_TO_WLAN_PERST_L
44 16 10	PCIE_WLAN_BI_AP_CLKREQ_L	PCIE_AP_BI_WLAN_CLKREQ_L

CONTEXT

44 16 10	AOP_TO_WLAN_CONTEXT_A	AOP_TO_WLAN_CONTEXT_A
44 16 10	AOP_TO_WLAN_CONTEXT_B	AOP_TO_WLAN_CONTEXT_B

RFFE

PP_RFFE_VIO_1V8	PP_1V8_VIO	PP_1V8_VIO-10[I120] 16 27 30 33 34 35 36 41 45
RFFE_SCLK_UAT	XCVR_TO_FE_RX_RFFE_CLK	27 33 34 35 36 41 42 45
RFFE_SDATA_UAT	XCVR_TO_FE_RX_RFFE_DATA	27 33 34 35 36 41 42 45
RFFE_SCLK_LAT	XCVR_TO_FE_RX_RFFE_CLK	27 33 34 35 36 41 42 45
RFFE_SDATA_LAT	XCVR_TO_FE_RX_RFFE_DATA	27 33 34 35 36 41 42 45

COEX

UART_COEX_BB_TO_WLAN_TXD	UART_COEX_BB_TO_WLAN_TXD	23 41 44
UART_COEX_WLAN_TO_BB_TXD	UART_COEX_WLAN_TO_BB_TXD	23 41 44

UART

UART_BTWLAN_TO_AP_RTS_L	UART_BT_TO_AP_CTS_L	10 16 44
UART_BTWLAN_TO_AP_TXD	UART_BT_TO_AP_RXD	10 16 44
UART_AP_TO_BTWLAN_RTS_L	UART_AP_TO_BT_RTS_L	10 16 44
UART_AP_TO_BTWLAN_TXD	UART_AP_TO_BT_TXD	10 16 44

WLAN 2.4GHZ

50_WLAN_G_TRX0_VOID_UAT	50_WLAN_G_TRX0_VOID_UAT	20 44 TO ANT4 TRIPLEXER
50_WLAN_G_TRX1_VOID_LAT	50_WLAN_G_TRX1_VOID_LAT	20 44 TO ANT3 TRIPLEXER

50 OHM
RF

WLAN_LAA_5GHZ

50_WLAN_LAA_FEM_TRX_VOID_UAT	50_WLAN_LAA_FEM_TRX_VOID_UAT	20 45 TO ANT5 BAND PASS FILTER
50_WLAN_LAA_FEM_TRX_VOID_LAT	50_WLAN_LAA_FEM_TRX_VOID_LAT	20 45 TO ANT6 DIPLEXER

LAA OUT

50_PRX_LAA_LNA1_OUT	50_WIFI_LAA_LAT_TO_XCVR_PRX	28 45 TO XCVR PRX
50_DRX_LAA_LNA2_OUT	50_WIFI_LAA_UAT_TO_XCVR_DRX	28 45 TO XCVR DRX

MT Pro

HARDWARE DESIGN MT Pro

PAGE TITLE	SYMBOL: WIFI
Apple Inc.	DRAWING NUMBER 051-02695 · SIZE D
	REVISION 4.0.0
	BRANCH
	PAGE 27 OF 27
	SHEET 42 OF 47

NOTICE OF PROPRIETARY PROPERTY:
THE INFORMATION CONTAINED HEREIN IS THE PROPRIETARY PROPERTY OF APPLE INC.
THE POSESSOR AGREES TO THE FOLLOWING:
I TO MAINTAIN THIS DOCUMENT IN CONFIDENCE
II NOT TO REPRODUCE OR COPY IT
III NOT TO REVEAL OR PUBLISH IT IN WHOLE OR PART
IV ALL RIGHTS RESERVED

CONFIDENTIAL AND PROPRIETARY APPLE SYSTEM DESIGN. FOR REFERENCE PURPOSE ONLY - NOT A CHANGE REQUEST

1. ALL RESISTANCE VALUES ARE IN OHMS, 0.1 WATT +/- 5%.
2. ALL CAPACITANCE VALUES ARE IN MICROFARADS.
3. ALL CRYSTALS & OSCILLATOR VALUES ARE IN HERTZ.

REV	ECN	DESCRIPTION OF REVISION	CK APPD / DATE
4	0011669799	ENGINEERING RELEASED	2018-03-16

X1049 HIER_WIFI (DIETCOKE)

LAST_MODIFICATION=Fri Mar 16 10:21:00 2018

PAGE	CSA	CONTENTS	SYNC	DATE
43	1	WIFI: TABLE OF CONTENTS		
44	2	DIETCOKE		
45	3	FEM MODULES		

WLAN SYMBOL IO PORTS

POWER
- 45 44 42 IO — PP_VDD_MAIN — VOLTAGE=3.8
- 45 44 42 IO — PP1V8_S2 — VOLTAGE=1.8

CONTROL
- 44 42 IO — PMU_TO_WLAN_REG_ON
- 44 42 IO — PMU_TO_BT_REG_ON
- 44 42 IO — AP_TO_BT_DEVICE_WAKE

CLOCKS
- 44 42 IO — PMU_TO_WLAN_CLK32K
- 44 42 IO — AP_TO_WLAN_TIME_SYNC
- 44 42 IO — BT_TO_AP_TIME_SYNC

WLAN PCIE
- 44 42 IO — 90_PCIE_AP_TO_WLAN_REFCLK_P
- 44 42 IO — 90_PCIE_AP_TO_WLAN_REFCLK_N
- 44 42 IO — 90_PCIE_AP_TO_WLAN_TXD_P
- 44 42 IO — 90_PCIE_AP_TO_WLAN_TXD_N
- 44 42 IO — 90_PCIE_WLAN_TO_AP_RXD_P
- 44 42 IO — 90_PCIE_WLAN_TO_AP_RXD_N
- 44 42 IO — PCIE_AP_TO_WLAN_PERST_L
- 44 42 IO — PCIE_WLAN_BI_AP_CLKREQ_L
- 44 42 IO — WLAN_TO_PMU_HOST_WAKE

BLWLAN UART
- 44 42 IO — UART_AP_TO_BT_TXD
- 44 42 IO — UART_BT_TO_AP_RXD
- 44 42 IO — UART_AP_TO_BT_RTS_L
- 44 42 IO — UART_BT_TO_AP_CTS_L

AOP
- 44 42 IO — AOP_TO_WLAN_CONTEXT_A
- 44 42 IO — AOP_TO_WLAN_CONTEXT_B

COEX
- 44 42 IO — UART_COEX_BB_TO_WLAN_TXD
- 44 42 IO — UART_COEX_WLAN_TO_BB_TXD

ANTENNA
- 44 42 IO — 50_WLAN_G_TRX0_VOID_UAT
- 44 42 IO — 50_WLAN_G_TRX1_VOID_LAT
- 45 42 IO — 50_WLAN_LAA_FEM_TRX_VOID_UAT
- 45 42 IO — 50_WLAN_LAA_FEM_TRX_VOID_LAT

RF
- 45 42 IO — 50_WIFI_LAA_LAT_TO_XCVR_PRX
- 45 42 IO — 50_WIFI_LAA_UAT_TO_XCVR_DRX

RFFE
- 45 42 IO — PP_1V8_VIO
- 45 42 IO — XCVR_TO_FE_RX_RFFE_CLK
- 45 42 IO — XCVR_TO_FE_RX_RFFE_DATA
- 45 42 IO — XCVR_TO_FE_RX_RFFE_CLK
- 45 42 IO — XCVR_TO_FE_RX_RFFE_DATA

U_WLAN_W ALTERNATES

PART NUMBER	ALTERNATE FOR PART NUMBER	BOM OPTION	REF DES	COMMENTS:
998-14250	998-14229	BOM_TABLE_ALTS	U_WLAN_W	WIFI/BT MODULE

Mobile1Tech.com

SCHEMATIC APN: 051-02623

DRAWING TITLE: SCH,MLB,BOT,ICE,D33

Apple Inc.

DRAWING NUMBER: 051-02695 | SIZE: D
REVISION: 4.0.0
BRANCH:
PAGE: 1 OF 3
SHEET: 43 OF 47

NOTICE OF PROPRIETARY PROPERTY:
THE INFORMATION CONTAINED HEREIN IS THE PROPRIETARY PROPERTY OF APPLE INC.
THE POSESSOR AGREES TO THE FOLLOWING:
I TO MAINTAIN THIS DOCUMENT IN CONFIDENCE
II NOT TO REPRODUCE OR COPY IT
III NOT TO REVEAL OR PUBLISH IT IN WHOLE OR PART
IV ALL RIGHTS RESERVED

WIFI/BT

MT Pro

L253_W
2.2UH-20%-1.1A-0.293OHM
0603
WLAN

L255_W
2.2UH-20%-1.1A-0.293OHM
0603
WLAN

DEFAULT_CAPACITOR_PACK_2_7.5e+06pF

C254_W 7.5UF 20% 4V CERM 0402 WLAN

C256_W 7.5UF 20% 4V CERM 0402 WLAN

PP1V8_S2

DEFAULT_CAPACITOR_27.000000PF_2_1

C250_W 27PF 5% 16V NP0-C0G 01005-1 WLAN

C252_W 0.01UF 10% 6.3V X5R 01005 WLAN

PP_VDD_MAIN

C232_W 10UF 20% 6.3V CERM-X5R 0402-9 WLAN

C245_W 0.01UF 10% 6.3V X5R 01005 WLAN

C246_W 27PF 5% 16V NP0-C0G 01005-1 WLAN

C247_W 4UF 20% 6.3V CER-X5R 0201 WLAN

ABUCK_1P12V

CBUCK_0P9V

NC

U_WLAN_W 2103-170101-50

LGA

SYM 1 OF 3

MOD_WIFI_BT_DIETCOKE_LGA364_5_LGA_2103_170101_50

33	VBATT	ASR_VLX	109
34	VBATT	ASR_VLX	42
35	VBATT	ABUCK_BT_1V12	112
102	VBATT	ABUCK_BT_1V12	45
103	VBATT	ABUCK_WLAN_1V12	113
104	VBATT	ABUCK_WLAN_1V12	46
23	VDDIO_1V8	CSR_VLX	107
		CSR_VLX	40
		CBUCK_0V9	105
		CBUCK_0V9	38
		VDD_RFLDO_3V3	63

JTAG_TDI/CONTEXT_A	11	AOP_TO_WLAN_CONTEXT_A	42 43 44
JTAG_TDO/CONTEXT_B	82	AOP_TO_WLAN_CONTEXT_B	42 43 44
JTAG_TRST*	15	JTAG_WLAN_TRST_L	44
JTAG_SEL	114	JTAG_WLAN_SEL	44
JTAG_TMS	14	JTAG_WLAN_TMS	44
JTAG_TCK	84	JTAG_WLAN_TCK	44
BT_UART_CTS_IN*	90	UART_AP_TO_BT_RTS_L	42 43 44
BT_UART_RX	21	UART_AP_TO_BT_TXD	42 43 44
BT_UART_RTS_OUT*	20	UART_BT_TO_AP_CTS_L	42 43 44
BT_UART_TX	91	UART_BT_TO_AP_RXD	42 43 44
WL_BT_HOST_WAKE	85	WLAN_TO_PMU_HOST_WAKE	OUT 42 43 44
WL_REG_ON	111	PMU_TO_WLAN_REG_ON	IN 42 43 44
BT_REG_ON	44	PMU_TO_BT_REG_ON	IN 42 43 44
BT_DEV_WAKE	92	AP_TO_BT_DEVICE_WAKE	42 43 44
RF_SW_CTRL_6/WLAN_GPIO_8	89		
BT_GPIO_2	88	NC	
BT_GPIO_3	17	BT_TO_AP_TIME_SYNC	OUT 42 43 44
BT_GPIO_4	18	NC	
BT_GPIO_5	19	NC	
LHL_GPIO2	51	NC	
GPIO_14	48	GPIO_14	R260_W 0.00 0% 1/32W MF 01005 — AP_TO_BT_DEVICE_WAKE 42 43 44
PCIE_PME*	50		

5GHZ_TX_C0	8		
5GHZ_RX_C0	6		
5GHZ_TX_C1	60		
5GHZ_RX_C1	56		
2P4GHZ_ANT_C0	69		
2P4GHZ_ANT_C1	66		
5GHZ_TSSI_C0	81		
RFA0_SW_CTRL_3	16		
RFA0_SW_CTRL_4	86		
RFA0_SW_CTRL_5	87		
5GHZ_TSSI_C1	119		
RFA1_SW_CTRL_13	120		
RFA1_SW_CTRL_14	53		
RFA1_SW_CTRL_15	52		
RF_SW_CTRL_16	121		
RF_SW_CTRL_17	47		
WLAN_TIME_SYNC	118		
LPO_IN	54		
PCIE_PERST*	117		
PCIE_CLKREQ*	116		
PCIE_RXD_P	30		
PCIE_RXD_N	99		
PCIE_TXD_P	28		
PCIE_TXD_N	97		
PCIE_REFCLK_P	26		
PCIE_REFCLK_N	95		
SECI_OUT	49		
SECI_IN	115		

UART_COEX_BB_TO_WLAN_TXD	IN	42 43	
UART_COEX_WLAN_TO_BB_TXD	OUT	42 43	
90_PCIE_AP_TO_WLAN_REFCLK_N	BI	42 43 44	
90_PCIE_AP_TO_WLAN_REFCLK_P	BI	42 43 44	
90_PCIE_WLAN_TO_AP_RXD_N	OUT	42 43 44	
90_PCIE_WLAN_TO_AP_RXD_P	OUT	42 43 44	
90_PCIE_AP_TO_WLAN_TXD_N	IN	42 43 44	
90_PCIE_AP_TO_WLAN_TXD_P	IN	42 43 44	
PCIE_WLAN_BI_AP_CLKREQ_L	BI	42 43 44	

R233_W 0.00 0% 1/32W MF 01005 WLAN
R234_W 0.00 0% 1/32W MF 01005 WLAN
R235_W 0.00 0% 1/32W MF 01005 WLAN
R236_W 0.00 0% 1/32W MF 01005 WLAN

45 OUT	50_WLAN_A_TX0	C201_W 0.3PF ±0.05PF 16V C0G-CERM 01005 NOSTUFF WLAN	50_WLAN_A_TX0_VOID_DTCK_OUT — C202_W 0.3PF ±0.05PF 16V C0G-CERM 01005 NOSTUFF WLAN
45 IN	50_WLAN_A_RX0	C227_W 0.3PF ±0.05PF 16V C0G-CERM 01005 NOSTUFF WLAN	50_WLAN_A_RX0_VOID_DTCK_IN — C240_W 0.3PF ±0.05PF 16V C0G-CERM 01005 NOSTUFF WLAN
45 OUT	50_WLAN_A_TX1	C228_W 0.3PF ±0.05PF 16V C0G-CERM 01005 NOSTUFF WLAN	50_WLAN_A_TX1_VOID_DTCK_OUT — C241_W 0.3PF ±0.05PF 16V C0G-CERM 01005 NOSTUFF WLAN
45 IN	50_WLAN_A_RX1	C229_W 0.3PF ±0.05PF 16V C0G-CERM 01005 NOSTUFF WLAN	50_WLAN_A_RX1_VOID_DTCK_IN — C242_W 0.3PF ±0.05PF 16V C0G-CERM 01005 NOSTUFF WLAN

DEFAULT_RESISTOR_0.0010HM_2_1

R237_W 0.00 1% 1/20W MF 0201 WLAN

IND_0201_2_7NH 2.7NH+/-0.1NH-0.6A

R238_W 2.7NH+/-0.1NH-0.6A

43 42 BI	50_WLAN_G_TRX0_VOID_UAT	C230_W 0.3PF ±0.05PF 16V C0G-CERM 01005 NOSTUFF WLAN	50_WLAN_G_TRX0_VOID_DTCK — C243_W 0.3PF ±0.05PF 16V C0G-CERM 01005 NOSTUFF WLAN
43 42 BI	50_WLAN_G_TRX1_VOID_LAT	C231_W 0.7PF ±0.05PF 16V NP0-C0G 01005 WLAN	50_WLAN_G_TRX1_VOID_DTCK — C244_W 0.7PF ±0.05PF 16V NP0-C0G 01005 WLAN

DEFAULT_CAPACITOR_0.7PF_2_1

DEFAULT_CAPACITOR_0.7PF_2_1

46 IN	5GHZ_C0_VDET_SHIELD		
45 OUT	RFA0_SW_CTRL0_SHIELD		
45 OUT	RFA0_SW_CTRL1_SHIELD		
45 OUT	RFA0_SW_CTRL2_SHIELD		
45 IN	5GHZ_C1_VDET_SHIELD		
46 OUT	RFA1_SW_CTRL0_SHIELD		
45 OUT	RFA1_SW_CTRL1_SHIELD		
45 OUT	RFA1_SW_CTRL2_SHIELD		

44 43 42 IN	AP_TO_WLAN_TIME_SYNC		
44 43 42 IN	PMU_TO_WLAN_CLK32K		
44 43 42 IN	PCIE_AP_TO_WLAN_PERST_L	C226_W 100PF 5% 25V C0G-CERM 01005 WLAN	DEFAULT_CAPACITOR_100.000000PF_2_1

REQUEST FROM REGULATORY FOR DE-GLITCH/SPUR

44 43 42	90_PCIE_AP_TO_WLAN_REFCLK_P	PP282_WL_SM P2MM-NSMOMIT
44 43 42	90_PCIE_AP_TO_WLAN_REFCLK_N	PP283_WL_SM P2MM-NSMOMIT
44 43 42	90_PCIE_AP_TO_WLAN_TXD_P	PP284_WL_SM P2MM-NSMOMIT
44 43 42	90_PCIE_AP_TO_WLAN_TXD_N	PP285_WL_SM P2MM-NSMOMIT
44 43 42	90_PCIE_WLAN_TO_AP_RXD_N	PP287_WL_SM P2MM-NSMOMIT
44 43 42	90_PCIE_WLAN_TO_AP_RXD_P	PP288_WL_SM P2MM-NSMOMIT
44 43 42	PCIE_WLAN_BI_AP_CLKREQ_L	PP289_WL_SM P2MM-NSMOMIT
44 43 42	PCIE_AP_TO_WLAN_PERST_L	PP293_WL_SM P2MM-NSMOMIT
44 43 42	WLAN_TO_PMU_HOST_WAKE	PP281_WL_SM P2MM-NSMOMIT
44 43 42	AP_TO_WLAN_TIME_SYNC	PP214_WL_SM P2MM-NSMOMIT
44 43 42	BT_TO_AP_TIME_SYNC	PP215_WL_SM P2MM-NSMOMIT

44 43 42	AOP_TO_WLAN_CONTEXT_A	PP239_WL_SM P2MM-NSMOMIT
44 43 42	AOP_TO_WLAN_CONTEXT_B	PP240_WL_SM P2MM-NSMOMIT
44	JTAG_WLAN_TCK	PP234_WL_SM P2MM-NSMOMIT
44	JTAG_WLAN_TMS	PP233_WL_SM P2MM-NSMOMIT
44	JTAG_WLAN_TRST_L	PP236_WL_SM P2MM-NSMOMIT
44	JTAG_WLAN_SEL	PP235_WL_SM P2MM-NSMOMIT
44 43 42	PMU_TO_WLAN_CLK32K	PP297_WL_SM P2MM-NSMOMIT
44 43 42	AP_TO_BT_DEVICE_WAKE	PP2015_WL_SM P2MM-NSMOMIT
44 43 42	PMU_TO_WLAN_REG_ON	PP295_WL_SM P2MM-NSMOMIT
44 43 42	PMU_TO_BT_REG_ON	PP296_WL_SM P2MM-NSMOMIT
44 43 42	UART_AP_TO_BT_RTS_L	PP210_WL_SM P2MM-NSMOMIT
44 43 42	UART_AP_TO_BT_TXD	PP211_WL_SM P2MM-NSMOMIT
44 43 42	UART_BT_TO_AP_CTS_L	PP212_WL_SM P2MM-NSMOMIT
44 43 42	UART_BT_TO_AP_RXD	PP213_WL_SM P2MM-NSMOMIT

44 43 42 WLAN_TO_PMU_HOST_WAKE

BT & WLAN SHARE HOST WAKE
RDAR:77304285 46

DEFAULT_RESISTOR_100000OHM_2_1

R259_W 100K 5% 1/32W MF 01005

45 44 43 42 PP1V8_S2

R257_W 10K 5% 1/32W MF 01005 WLAN NOSTUFF

44 JTAG_WLAN_SEL

NOSTUFF= JTAG DISABLED

44 43 42 45 PP1V8_S2

R258_W 10K 5% 1/32W MF 01005 WLAN NOSTUFF

44 GPIO_14

NOSTUFF=BT OVER PCIE
INTERNAL PD FOR BT OVER PCIE

U_WLAN_W 2103-170101-50

LGA

SYM 2 OF 3

MOD_WIFI_BT_DIETCOKE_LGA364_5_LGA_2103_170101_50

1	GND	GND	144	219	GND	GND	292
2	GND	GND	145	220	GND	GND	293
3	GND	GND	146	221	GND	GND	294
4	GND	GND	147	222	GND	GND	295
5	GND	GND	148	223	GND	GND	296
7	GND	GND	149	224	GND	GND	297
9	GND	GND	150	225	GND	GND	298
10	GND	GND	151	226	GND	GND	299
12	GND	GND	152	227	GND	GND	300
13	GND	GND	153	228	GND	GND	301
22	GND	GND	154	229	GND	GND	302
24	GND	GND	155	230	GND	GND	303
25	GND	GND	156	231	GND	GND	304
27	GND	GND	157	232	GND	GND	305
29	GND	GND	158	233	GND	GND	306
31	GND	GND	159	234	GND	GND	307
32	GND	GND	160	235	GND	GND	308
36	GND	GND	161	236	GND	GND	309
37	GND	GND	162	237	GND	GND	310
39	GND	GND	163	238	GND	GND	311
41	GND	GND	164	239	GND	GND	312
43	GND	GND	165	240	GND	GND	313
55	GND	GND	166	241	GND	GND	314
57	GND	GND	167	242	GND	GND	315
58	GND	GND	168	243	GND	GND	316
59	GND	GND	169	244	GND	GND	317
61	GND	GND	170	245	GND	GND	318
62	GND	GND	171	246	GND	GND	319
64	GND	GND	172	247	GND	GND	320
65	GND	GND	173	248	GND	GND	321
67	GND	GND	174	249	GND	GND	322
68	GND	GND	175	250	GND	GND	323
70	GND	GND	176	251	GND	GND	324
71	GND	GND	177	252	GND	GND	325
72	GND	GND	178	253	GND	GND	326
73	GND	GND	179	254	GND	GND	327
74	GND	GND	180	255	GND	GND	328
75	GND	GND	181	256	GND	GND	329
76	GND	GND	182	257	GND	GND	330
77	GND	GND	183	258	GND	GND	331
78	GND	GND	184	259	GND	GND	332
79	GND	GND	185	260	GND	GND	333
80	GND	GND	186	261	GND	GND	334
83	GND	GND	187	262	GND	GND	335
93	GND	GND	188	263	GND	GND	336
94	GND	GND	189	264	GND	GND	337
96	GND	GND	190	265	GND	GND	338
98	GND	GND	191	266	GND	GND	339
100	GND	GND	192	267	GND	GND	340
101	GND	GND	193	268	GND	GND	341
106	GND	GND	194	269	GND	GND	342
108	GND	GND	195	270	GND	GND	343
110	GND	GND	196	271	GND	GND	344
122	GND	GND	197	272	GND	GND	345
123	GND	GND	198	273	GND	GND	346
124	GND	GND	199	274	GND	GND	347
125	GND	GND	200	275	GND	GND	348
126	GND	GND	201	276	GND	GND	349
127	GND	GND	202	277	GND	GND	350
128	GND	GND	203	278	GND	GND	351
129	GND	GND	204	279	GND	GND	352
130	GND	GND	205	280	GND	GND	353
131	GND	GND	206	281	GND	GND	354
132	GND	GND	207	282	GND	GND	355
133	GND	GND	208	283	GND	GND	356
134	GND	GND	209	284	GND	GND	357
135	GND	GND	210	285	GND	GND	358
136	GND	GND	211	286	GND	GND	359
137	GND	GND	212	287	GND	GND	360
138	GND	GND	213	288	GND	GND	361
139	GND	GND	214	289	GND	GND	362
140	GND	GND	215	290	GND	GND	363
141	GND	GND	216	291	GND	GND	364
142	GND	GND	217				
143	GND	GND	218				

U_WLAN_W 2103-170101-50

LGA

SYM 3 OF 3

MOD_WIFI_BT_DIETCOKE_LGA364_5_LGA_2103_170101_50

219	GND	GND	292
220	GND	GND	293
221	GND	GND	294
222	GND	GND	295
223	GND	GND	296
224	GND	GND	297
225	GND	GND	298
226	GND	GND	299
227	GND	GND	300
228	GND	GND	301
229	GND	GND	302
230	GND	GND	303
231	GND	GND	304
232	GND	GND	305
233	GND	GND	306
234	GND	GND	307
235	GND	GND	308
236	GND	GND	309
237	GND	GND	310
238	GND	GND	311
239	GND	GND	312
240	GND	GND	313
241	GND	GND	314
242	GND	GND	315
243	GND	GND	316
244	GND	GND	317
245	GND	GND	318
246	GND	GND	319
247	GND	GND	320
248	GND	GND	321
249	GND	GND	322
250	GND	GND	323
251	GND	GND	324
252	GND	GND	325
253	GND	GND	326
254	GND	GND	327
255	GND	GND	328
256	GND	GND	329
257	GND	GND	330
258	GND	GND	331
259	GND	GND	332
260	GND	GND	333
261	GND	GND	334
262	GND	GND	335
263	GND	GND	336
264	GND	GND	337
265	GND	GND	338
266	GND	GND	339
267	GND	GND	340
268	GND	GND	341
269	GND	GND	342
270	GND	GND	343
271	GND	GND	344
272	GND	GND	345
273	GND	GND	346
274	GND	GND	347
275	GND	GND	348
276	GND	GND	349
277	GND	GND	350
278	GND	GND	351
279	GND	GND	352
280	GND	GND	353
281	GND	GND	354
282	GND	GND	355
283	GND	GND	356
284	GND	GND	357
285	GND	GND	358
286	GND	GND	359
287	GND	GND	360
288	GND	GND	361
289	GND	GND	362
290	GND	GND	363
291	GND	GND	364

PAGE TITLE: DIETCOKE

Apple Inc.

DRAWING NUMBER: 051-02695
SIZE: D
REVISION: 4.0.0
BRANCH:
PAGE: 2 OF 3
SHEET: 44 OF 47

NOTICE OF PROPRIETARY PROPERTY:
THE INFORMATION CONTAINED HEREIN IS THE PROPRIETARY PROPERTY OF APPLE INC.
THE POSESSOR AGREES TO THE FOLLOWING:
I TO MAINTAIN THIS DOCUMENT IN CONFIDENCE
II NOT TO REPRODUCE OR COPY IT
III NOT TO REVEAL OR PUBLISH IT IN WHOLE OR PART
IV ALL RIGHTS RESERVED

FEM MODULES

MT Pro

5GHZ UAT FEED

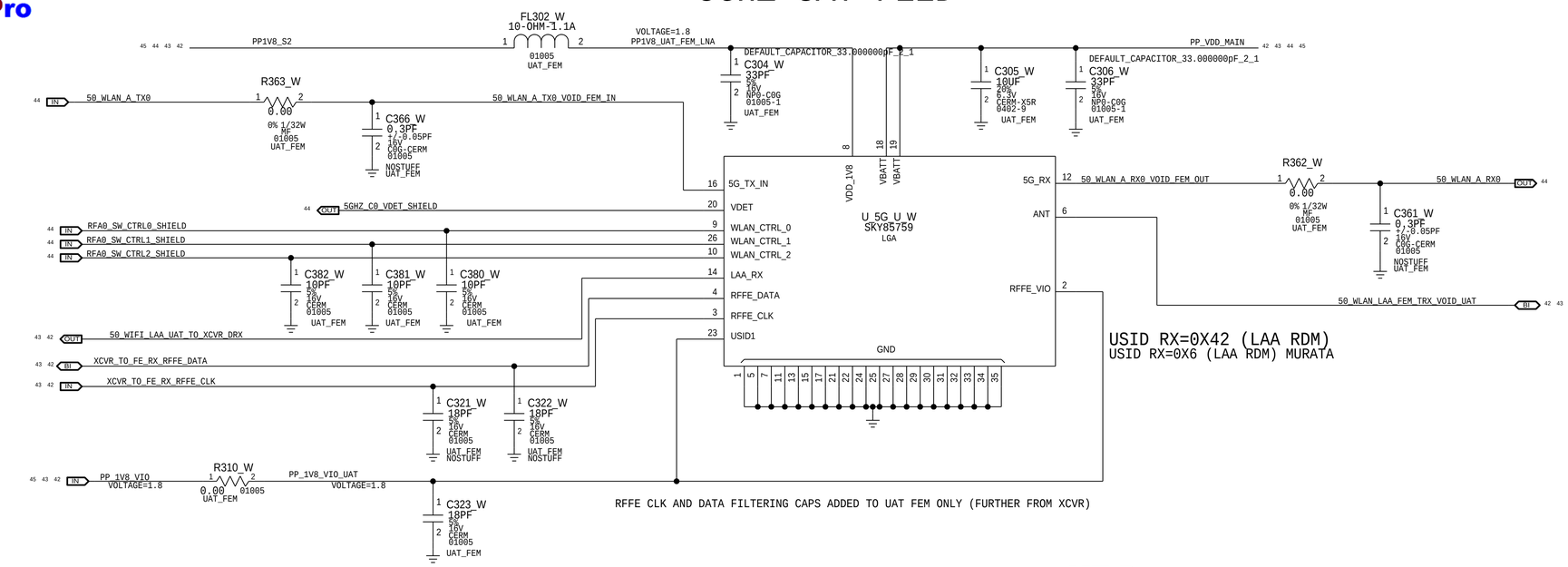

MT Pro

5GHZ LAT FEED

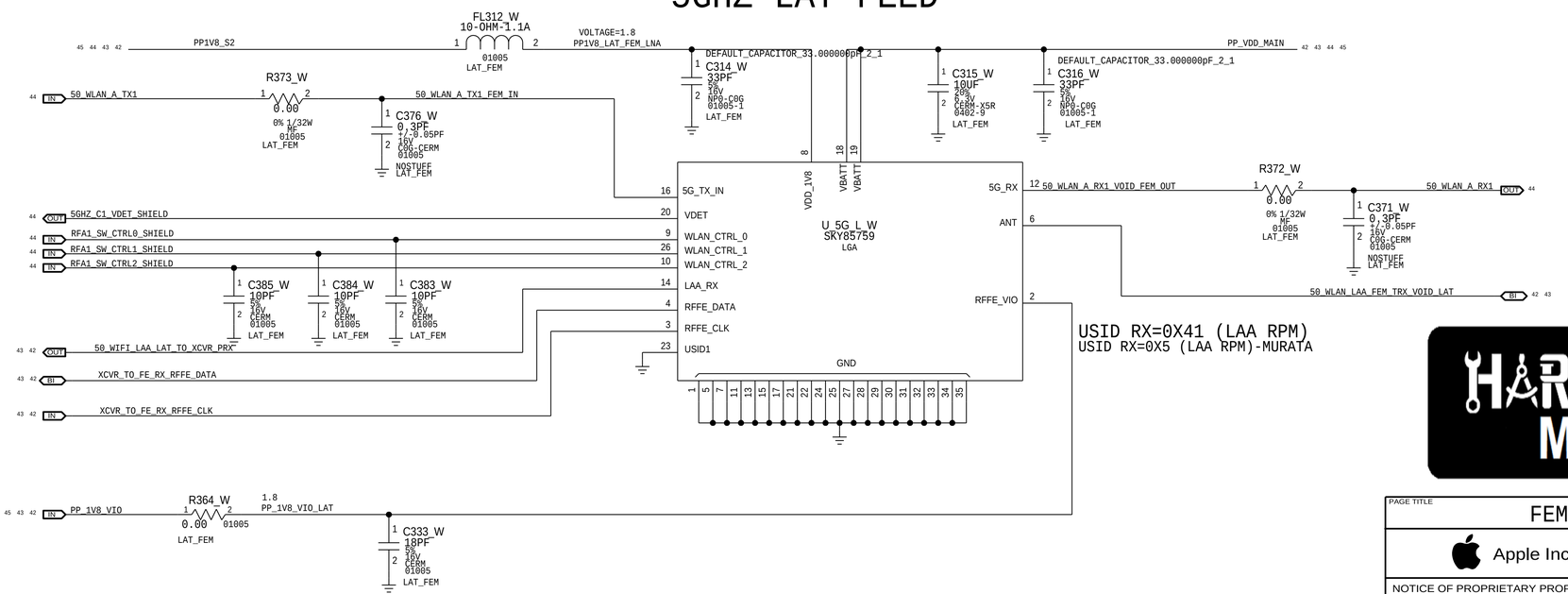

HARDWARE MT Pro

PAGE TITLE	FEM MODULES
Apple Inc.	
DRAWING NUMBER	051-02695
SIZE	D
REVISION	4.0.0
BRANCH	
PAGE	3 OF 3
SHEET	45 OF 47

NOTICE OF PROPRIETARY PROPERTY:

THE INFORMATION CONTAINED HEREIN IS THE PROPRIETARY PROPERTY OF APPLE INC.
THE POSESSOR AGREES TO THE FOLLOWING:
I TO MAINTAIN THIS DOCUMENT IN CONFIDENCE
II NOT TO REPRODUCE OR COPY IT
III NOT TO REVEAL OR PUBLISH IT IN WHOLE OR PART
IV ALL RIGHTS RESERVED

1. ALL RESISTANCE VALUES ARE IN OHMS, 0.1 WATT +/- 5%.
2. ALL CAPACITANCE VALUES ARE IN MICROFARADS.
3. ALL CRYSTALS & OSCILLATOR VALUES ARE IN HERTZ.

REV	ECN	DESCRIPTION OF REVISION	CK APPD / DATE
4	0011669799	ENGINEERING RELEASED	2018-03-16

HIER_NFC

MT Pro

LAST_MODIFICATION=Fri Mar 16 10:21:01 2018

PAGE	CSA	CONTENTS	SYNC	DATE
46	1	NFC: TABLE OF CONTENTS		
47	75	NFC		

47 10 IN PP_VDD_MAIN VOLTAGE=3.8
47 10 IN PP1V8_NFC_S2 VOLTAGE=1.8

47 10 IN PMU_TO_NFC_EN
47 10 OUT NFC_TO_AOP_HOST_WAKE
47 10 IN AP_TO_NFC_DEV_WAKE
47 10 IN AP_TO_NFC_FW_DWLD_REQ

47 10 IN UART_AP_TO_NFC_TXD
47 10 OUT UART_NFC_TO_AP_RXD
47 10 IN UART_AP_TO_NFC_RTS_L
47 10 OUT UART_NFC_TO_AP_CTS_L

47 IN AP_TO_NFC_BUTTON
47 10 IN PMU_TO_NFC_VDD_MAIN_EN
47 10 OUT NFC_TO_ARC_RESET_L
47 10 OUT NFC_TO_ARC_TRIG

47 10 OUT NFC_ANT

PART NUMBER	ALTERNATE FOR PART NUMBER	BOM OPTION	REF DES	COMMENTS:
197S00076	197S00060	BOM_TABLE_ALTS	Y7500_S	XTAL,27P12 MHZ
197S00077	197S00060	BOM_TABLE_ALTS	Y7500_S	XTAL,27P12 MHZ

HARDWARE MT Pro

NFC: TABLE OF CONTENTS

DRAWING TITLE: SCH,MLB,BOT,ICE,D33

Apple Inc.

DRAWING NUMBER: 051-02695 SIZE: D
REVISION: 4.0.0
BRANCH:
PAGE: 1 OF 75
SHEET: 46 OF 47

NOTICE OF PROPRIETARY PROPERTY:
THE INFORMATION CONTAINED HEREIN IS THE PROPRIETARY PROPERTY OF APPLE INC. THE POSESSOR AGREES TO THE FOLLOWING:
I TO MAINTAIN THIS DOCUMENT IN CONFIDENCE
II NOT TO REPRODUCE OR COPY IT
III NOT TO REVEAL OR PUBLISH IT IN WHOLE OR PART
IV ALL RIGHTS RESERVED

STOCKHOLM

NFC CONTROLLER

NFC FRONT END

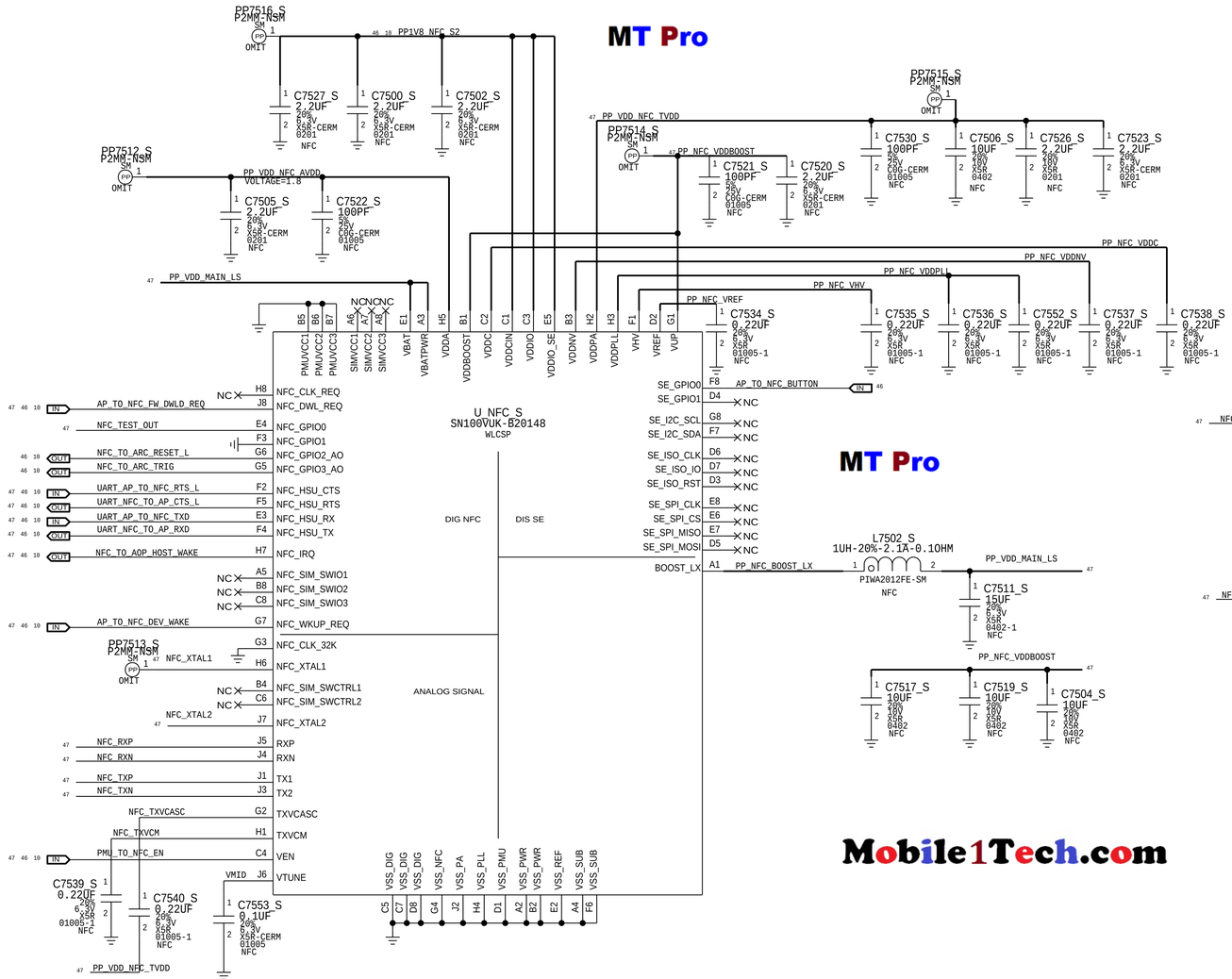

MT Pro
MT Pro
MT Pro
Mobile1Tech.com
HARDWARE MT Pro

PAGE TITLE	NFC
Apple Inc.	DRAWING NUMBER 051-02695 · SIZE D
	REVISION 4.0.0
	BRANCH
	PAGE 75 OF 75
	SHEET 47 OF 47

NOTICE OF PROPRIETARY PROPERTY:
THE INFORMATION CONTAINED HEREIN IS THE PROPRIETARY PROPERTY OF APPLE INC.
THE POSESSOR AGREES TO THE FOLLOWING:
I TO MAINTAIN THIS DOCUMENT IN CONFIDENCE
II NOT TO REPRODUCE OR COPY IT
III NOT TO REVEAL OR PUBLISH IT IN WHOLE OR PART
IV ALL RIGHTS RESERVED